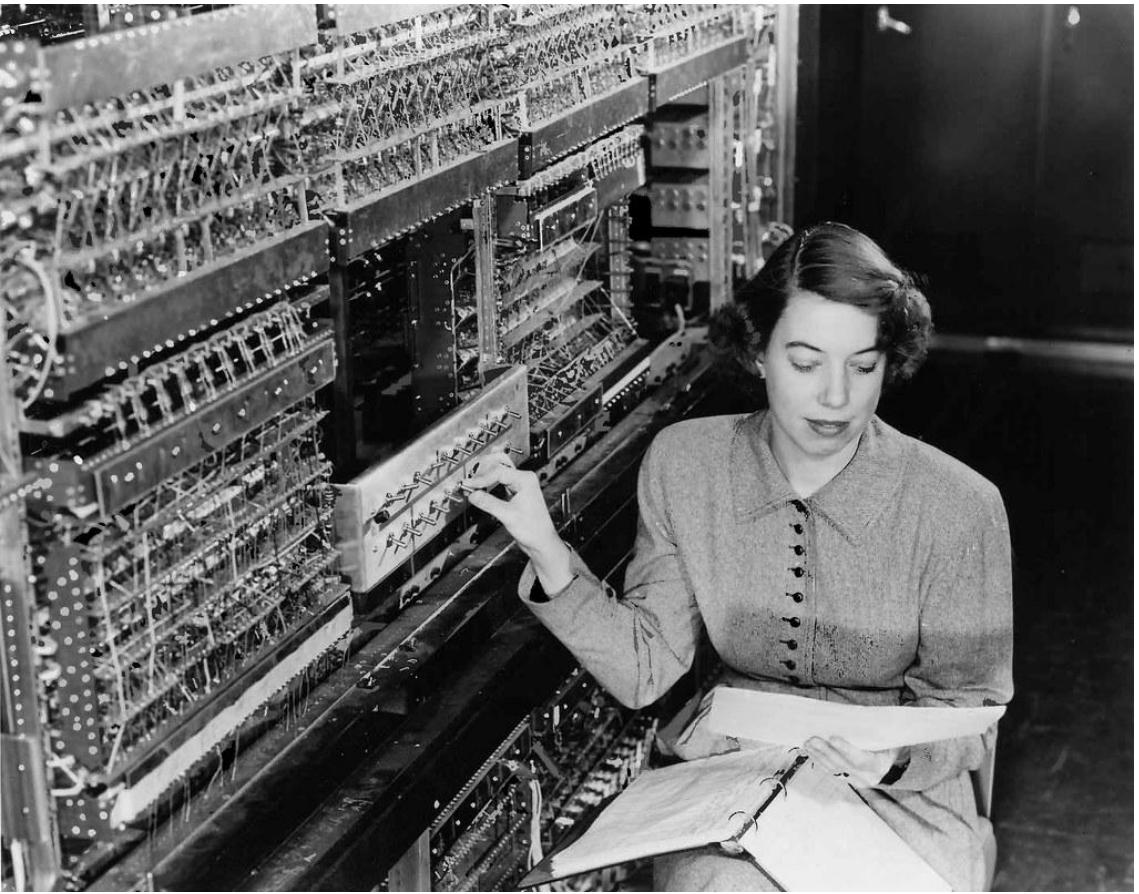

ATHENA

Collaboration Meeting

Friday 2021-07-08

The Software and Computing WG Conveners:
Andrea Bressan (University of Trieste and INFN) ,
Dmitry Romanov (Jefferson lab) ,
Sylvester Joosten (Argonne National Laboratory) ,
Whitney Armstrong (Argonne National Laboratory) ,
Wouter Deconinck (The University of Manitoba)

Simulation status
(and “baseline” geometry implementation)

Calorimetry WG

- Ready to study impact of magnet on HCAL:
  - ✅ Realistic HCAL geometry
  - ✅ Solenoid material
  - ✅ 🆕 Helmholtz added
  - ✅ HCAL clustering and energy calibration
- ECAL system well-developed:
  - Barrel ECAL:
    - ✅ Barrel SiW imaging calorimeter
    - ✅ Barrel hybrid SiW + WSciFi calorimeter
  - Electron-endcap ECAL:
    - ✅ Crystal calorimeter
    - ✅ Glass calorimeter
    - ✅ 🆕 Hybrid electron endcap for baseline
    - 🚧 WSciFi calorimeter
  - ✅ Reconstruction (2D, 2+1D and 3D clustering)
- Geometry:
  - 🚧 Finalize geometry for “baseline” setup with longer barrel/smaller negative endcap ECAL

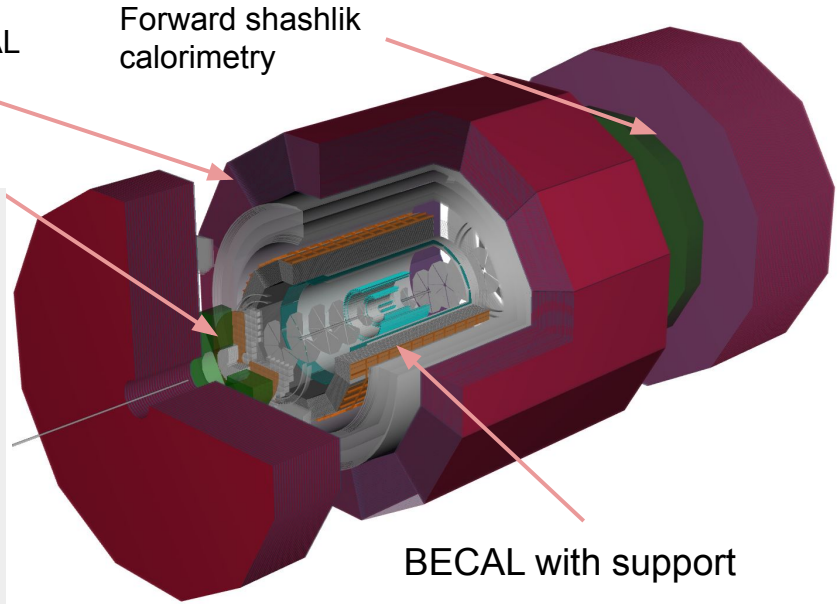

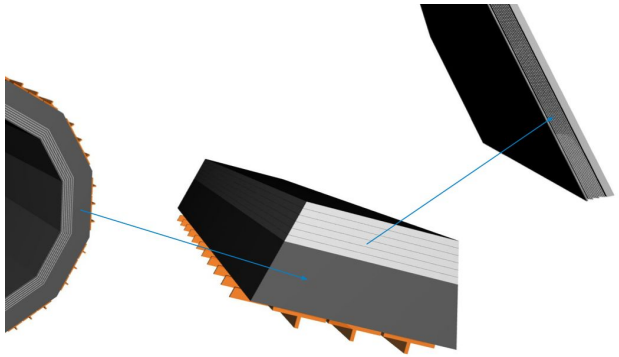

Calorimetry delegate: Vladimir Berndnikov
S&C WG contacts: Wouter Deconinck & Sylvester Joosten

Far-forward & Far-backward WGs

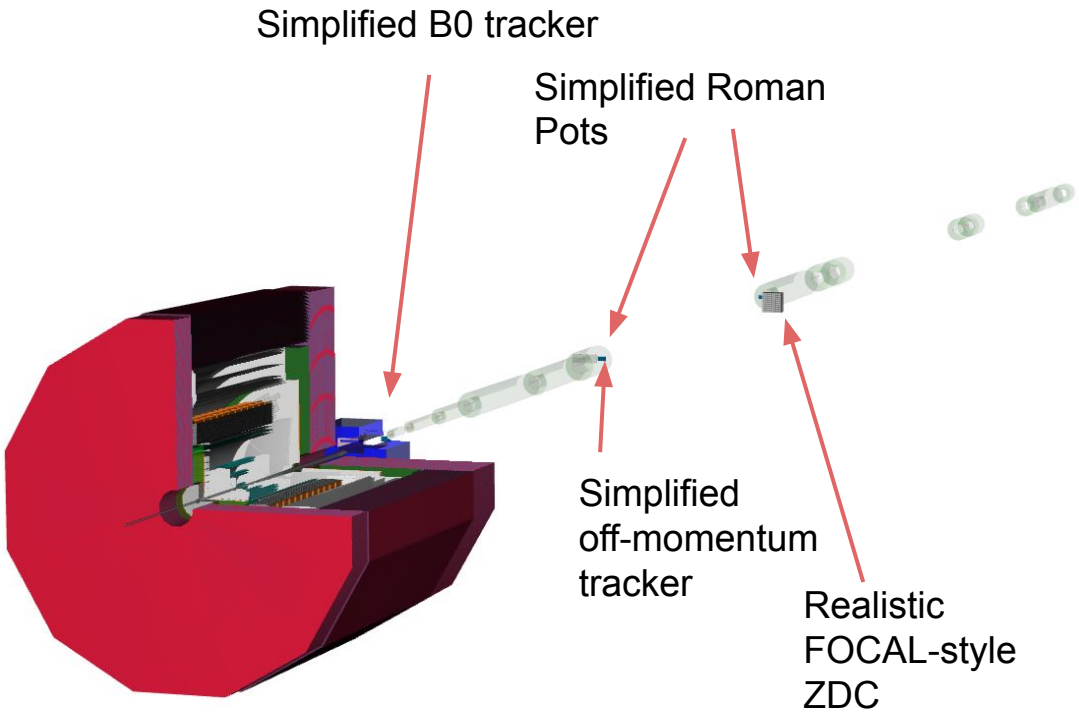

- FF being worked on by Alex Jentsch
  - ✅ 🆕 Magnets and detectors updated to latest design
  - ❌ Flip IR orientation to right-handed coordinate system (“big flip” in 2 weeks)
  - 🚧 Will add realistic beam-pipe model
- FB
  - 🚧 🆕 IR implementation

FF delegate: Alex Jentsch
FB delegate: Jaroslav Adam
S&C WG contact: Whitney Armstrong

PID WG

- dRICH (Christopher Dilks, Chao Peng)
  - ✅ functioning fuzzy-K ring-clustering
  - 🚧 geometry being adjusted by Christopher
  - ✅ have field maps for both magnet setups
- mRICH (Murad Sarsour, Whitney Armstrong)
  - ✅ received baseline realistic geometry (implemented in fun4All) from Murad
  - 🚧 implement realistic detector in DD4hep (90% complete)
- DIRC (Grzegorz Kalicy, Dmitry Romanov)
  - ✅ simplified geometry
  - 🚧 implement realistic detector in DD4hep
- TOF (Zhenyu Ye)
  - ✅ LGAD implementation with realistic services

gas-RICH starting point for dRICH implementation

LGAD implementation ongoing (Zhenyu)

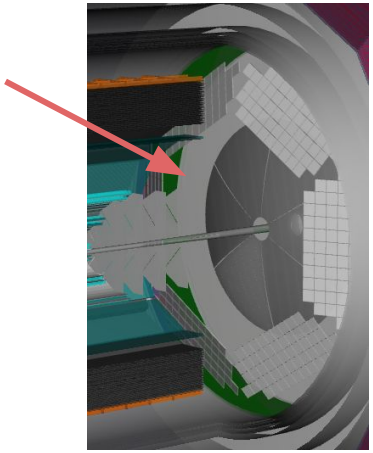

mRICH geometry changing quickly

DIRC needs the most work

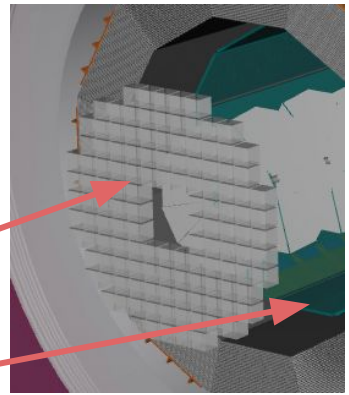

PID delegate: Zhenyu Ye
S&C WG contact: Dmitry Romanov

Tracking WG

Outer LGAD layer not part of the “0-0-0” setup

Barrel staves as in ITS2 TDR

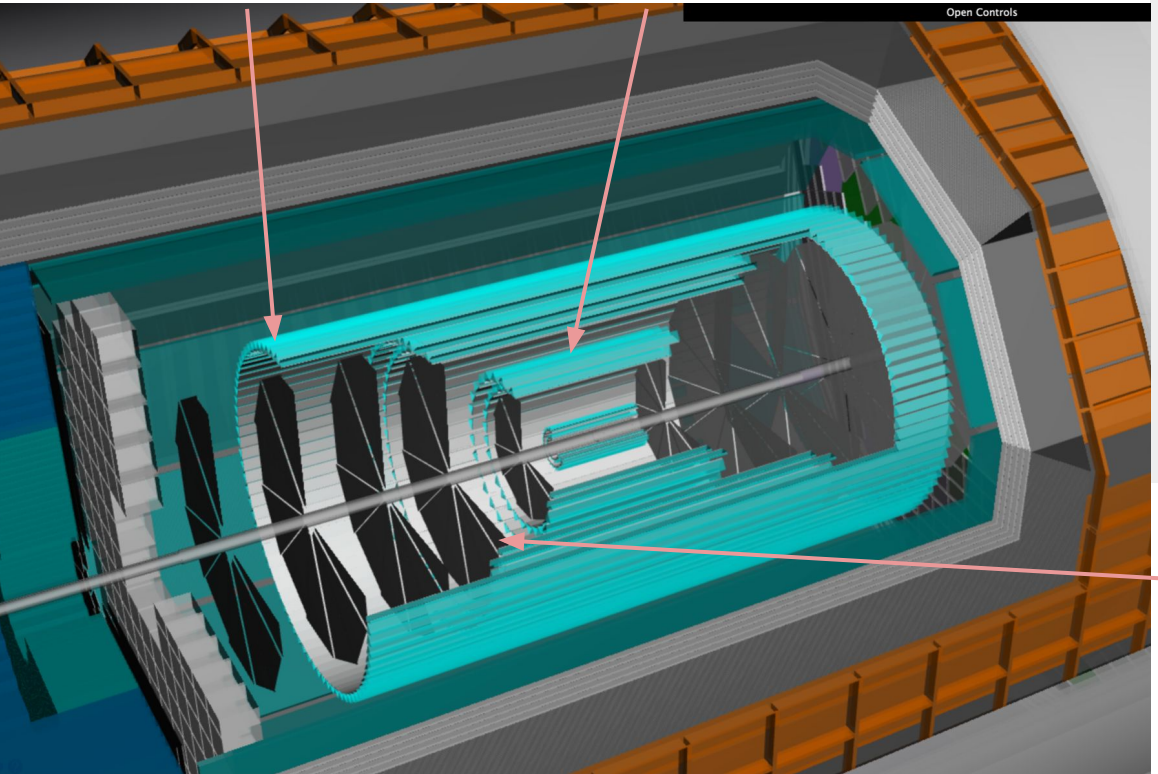

- 🚧 silicon tracker
  - 🚧 Material validation (Shujie Li)
  - ❌ Vertex layers to be changed to cylindrical geometry
  - ❌ Support cones
- ✅ barrel MPGD
  - 🚧 🆕 convert to mMGAS (Francesco Bossu)
- ✅ GEM
- Reconstruction:
  - ✅ geometries fully functional with ACTS
  - 🚧 updating algorithms for ACTS v8.3 (tracking benchmarks ongoing)

Disks are wedges with sensitive layer and average material backing. Needs better constraints from WG

Tracking delegate: Matt Posik
S&C WG contact: Sylvester Joosten

Physics WGs

- ✅ Generic (unvalidated) afterburner
  - ❌ Update afterburner based on the presentation by Brian Page
- 🚧 Collect physics analysis portfolio
- 🚧 🆕 First physics-ready production next week
  - gaps in baseline detector reconstruction filled-in with fastMC-style algorithms.
- 🚧 🆕 Tutorial example on data analysis

Exclusive & Tagging delegate: TBD
S&C WG contact: Sylvester Joosten

Inclusive delegate: Barak Schmookler
S&C WG contact: N/A

Jets, HF & EW-BSM delegate: Brian Page
S&C WG contact: Wouter Deconinck

SIDIS delegate: Christopher Dilks
S&C WG contact: N/A

DAQ WG

DAQ delegates: Alexandre Camsonne & Jeffery Landgraf
S&C WG contact: Andrea Bressan

Tutorial plans

Documentation portal:
doc.athena-eic.org

Full simulation tutorials

eic-ip6-software-l@lists.bnl.gov
#software-helpdesk on Slack

1. Full reconstruction tutorial will be posted as online-only tutorial, with #software-helpdesk for support. We can organize an in-person Q&A session later as needed
2. Analysis tutorial/example on data analysis (aimed and Physics WGs). Will be as website.

Computing Update

Resource requirements

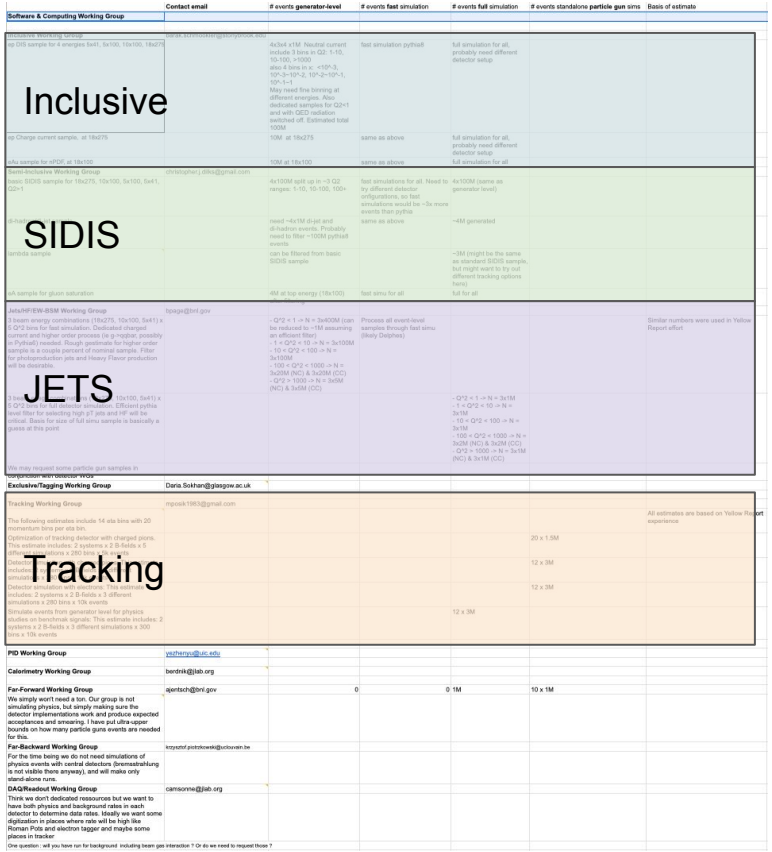

	Contact email	# events generator-level	# events fast simulation	# events full simulation	# events standalone particle gun sims	Basis of estimate
Software & Computing Working Group						
Inclusive Working Group						
ep DIS sample for 4 energies 5x41, 5x100, 10x100, 18x275		4x3x4 x1M Neutral current include 3 bins in Q2: 1-10, 10-100, >1000 also 4 bins in x: <10^-3, 10^-3–10^-2, 10^-2–10^-1, 10^-1–1 May need fine binning at different energies. Also dedicated samples for Q2<1 and with QED radiation switched off. Estimated total 100M	fast simulation pythia8	full simulation for all, probably need different detector setup		
ep Charge current sample, at 18x275		10M at 18x275	same as above	full simulation for all, probably need different detector setup		
eAu sample for nPDF, at 18x100		10M at 18x100	same as above	full simulation for all		
Semi-Inclusive Working Group	christopher.j.dilks@gmail.com					
basic SIDIS sample for 18x275, 10x100, 5x100, 5x41, Q2>1		4x100M split up in ~3 Q2 ranges: 1-10, 10-100, 100+	fast simulations for all. Need to try different detector configurations, so fast simulations would be ~3x more events than pythia	4x100M (same as generator level)		
8-hadron sample		need ~4x1M di-jet and di-hadron events. Probably need to filter ~100M pythia8 events	same as above	~4M generated		
lambda sample		can be filtered from basic SIDIS sample		~3M (might be the same as standard SIDIS sample, but might want to try out different tracking options here)		
eA sample for gluon saturation		4M at top energy (18x100)	fast simu for all	full for all		
Jets/HF/EW-BSM Working Group	bpage@bnl.gov					
3 beam energy combinations (18x275, 10x100, 5x41) x 5 Q^2 bins for fast simulation. Dedicated charged current and higher order process (ie g-hqbar, possibly in Pythia8) needed. Rough gestimate for higher order sample is a couple percent of nominal sample. Filter for photoproduction jets and Heavy Flavor production will be desirable.		- Q^2 < 1 -> N = 3x400M (can be reduced to ~1M assuming an efficient filter) - 1 < Q^2 < 10 -> N = 3x100M - 10 < Q^2 < 100 -> N = 3x100M - 100 < Q^2 < 1000 -> N = 3x20M (NC) & 3x20M (CC) - Q^2 > 1000 -> N = 3x5M (NC) & 3x5M (CC)	Process all event-level samples through fast simu (likely Delphes)			Similar numbers were used in Yellow Report effort
3 beam energy combinations (18x275, 10x100, 5x41) x 5 Q^2 bins for full detector simulation. Efficient pythia level filter for selecting high pT jets and HF will be critical. Basis for size of full simu sample is basically a guess at this point				- Q^2 < 1 -> N = 3x1M - 1 < Q^2 < 10 -> N = 3x1M - 10 < Q^2 < 100 -> N = 3x1M - 100 < Q^2 < 1000 -> N = 3x2M (NC) & 3x2M (CC) - Q^2 > 1000 -> N = 3x1M (NC) & 3x1M (CC)		
We may request some particle gun samples in Calorimeter with detector WGs						
Exclusive/Tagging Working Group	Daria.Sokhan@glasgow.ac.uk					
Tracking Working Group	mposik1983@gmail.com					
The following estimates include 14 eta bins with 20 momentum bins per eta bin.						All estimates are based on Yellow Report experience
Optimization of tracking detector with charged pions. This estimate includes: 2 systems x 2 B-fields x 5 different simulations x 280 bins x 10k events					20 x 1.5M	
Detector simulation with electrons. This estimate includes: 2 systems x 2 B-fields x 3 different simulations x 280 bins x 10k events					12 x 3M	
Detector simulation with electrons. This estimate includes: 2 systems x 2 B-fields x 3 different simulations x 280 bins x 10k events					12 x 3M	
Simulate events from generator level for physics studies on benchmark signals: This estimate includes: 2 systems x 2 B-fields x 3 different simulations x 300 bins x 10k events				12 x 3M		
PID Working Group	yezhenyu@uic.edu					
Calorimetry Working Group	berdnik@jlab.org					
Far-Forward Working Group	ajentsch@bnl.gov	0	0	1M	10 x 1M	
We simply won't need a ton. Our group is not simulating physics, but simply making sure the detector implementations work and produce expected acceptances and smearing. I have put ultra-upper bounds on how many particle guns events are needed for this.						
Far-Backward Working Group	krzysztof.piotrkowski@uclouvain.be					
For the time being we do not need simulations of physics events with central detectors (bremsstrahlung is not visible there anyway), and will make only stand-alone runs.						
DAQ/Readout Working Group	camsonne@jlab.org					
Think we don't dedicated ressources but we want to have both physics and background rates in each detector to determine data rates. Ideally we want some digitization in places where rate will be high like Roman Pots and electron tagger and maybe some places in tracker						
One question : will you have run for background including beam gas interaction ? Or do we need to request those ?						

- **Still need initial estimates from exclusive, PID & calorimetry**
- Estimates are not carved in stone and we will explore synergies between WGs where appropriate
- Currently a lot of computing resources available!

Large scale data productions

- Input: HepMC files preferred (`pip install mcconv` for other formats)
- Full simulation with current detector model, all bells and whistles:
  - Typical: 0.25 to 3.0 s/event, <500MB RAM RSS, 30 kB to 750 kB output size/event
  - Slightly decreasing performance as geometry features are added
  - Full ROOT files on S3 under `ATHENA/FULL/`
- Reconstruction
  - Focus on full calorimetry clustering (Ecal and Hcal), tracking will be added next
  - Reco ROOT files on S3 under `ATHENA/RECO/`
- Full simulation: ~weekly repetition; reconstruction: every few days
- Written to work on any slurm batch system; performed at Compute Canada
  - Currently also working on trial runs on OSG at the ~2k job scale for single particle events)

Simulations reruns are currently on hold until track reconstruction available and baseline geometry available.

Overview of Available Productions

- DIS: {5x41, 18x275} ⊗ {CC, NC} ⊗ {Q2 > 10, 100, 1000 GeV} (1M each)
- EXCLUSIVE:
  - eslight rho test production in progress
  - pi-neutron, K-Lambda, K-Sigma in progress
- SINGLES
  - {3 to 50 deg, 45 to 135 deg, 130 to 177 deg} ⊗ {e-, pi+, kaon0L, neutron, gamma} ⊗ {1, 2, 5, 10, 20, 50 GeV} (1M each)

Dashboards in progress...

RECO	hEndcap (3 to 50 deg)						Barrel (45 to 135 deg)						eEndcap (130 to 177 deg)					
	1	2	5	10	20	50	1	2	5	10	20	50	1	2	5	10	20	50
e-	☐	☐	☐	☐	☐	☐	☐	☐	☐	☐	☐	☐	☑	☑	☑	☑	☑	☑
gamma	☐	☐	☐	☐	☐	☐	☑	☑	☑	☑	☑	☐	☐	☐	☐	☐	☐	☐
kaon0L	☑	☑	☑	☑	☑	☐	☑	☑	☑	☑	☑	☐	☐	☐	☐	☐	☐	☐
neutron	☐	☐	☐	☐	☐	☐	☑	☑	☑	☑	☑	☐						
pi+	☑	☑	☑	☑	☑	☑	☑	☑	☑	☑	☑	☑						
pi0	☐	☐	☐	☐	☐	☐	☐	☐	☐	☐	☐	☐						

Software & Computing WG

Bi-weekly software meeting: Thursday 12:00pm EDT

Software & Computing Conveners:

Whitney Armstrong, Andrea Bressan(*), Wouter Deconinck, Sylvester Joosten, Dmitry Romanov (*)- liaison to EICUG software group

Day 0 WG support:

Kolja Kauder, Miguel Arratia, Stephen Sekula, Dmitry Romanov, Yulia Furletova, Andrea Bressan

Full simulation/reconstruction team

Whitney Armstrong, Miguel Arratia, Wouter Deconinck, Sylvester Joosten, Jihee Kim, Chao Peng, Tomas Polakovic, Dmitry Romanov, Marshall Scott, Zhenyu Ye, Ziyue Zhang, Maria Żurek

...and a rapidly growing amount ATHENA collaborators!

Documentation portal: doc.athena-eic.org

Full simulation tutorials

eic-ip6-software-l@lists.bnl.gov

#software-helpdesk on Slack

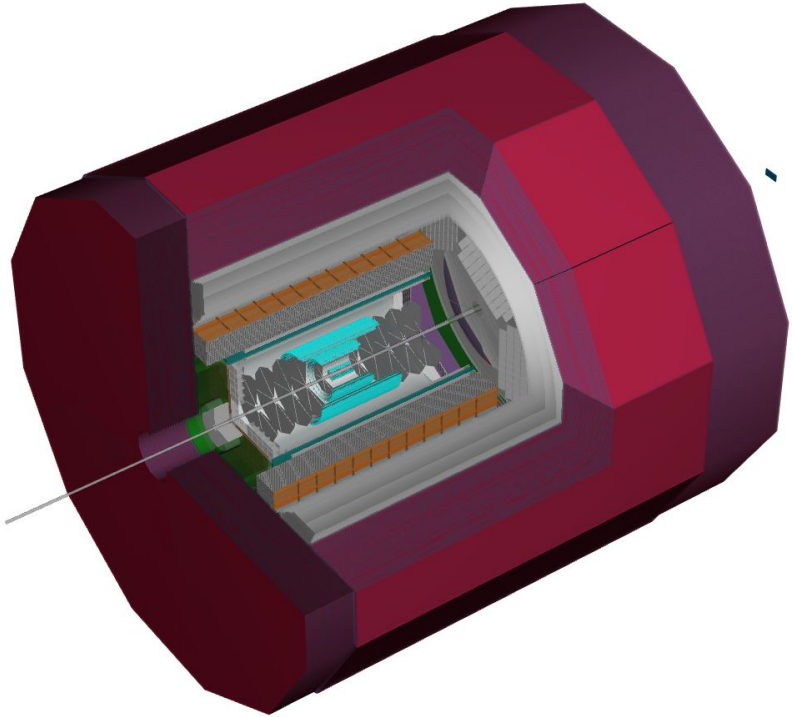

ATHENA central detector