Proposal Committee Subgroup: Integration & Global Design

Status Report

Silvia Dalla Torre, Alexander Kiselev, Bedanga Mohanty,
Franck Sabatie, Thomas Ullrich

September 16, 2021

BROOKHAVEN
NATIONAL LABORATORY

The Goal of the I/GD Subgroup is …

Design this:

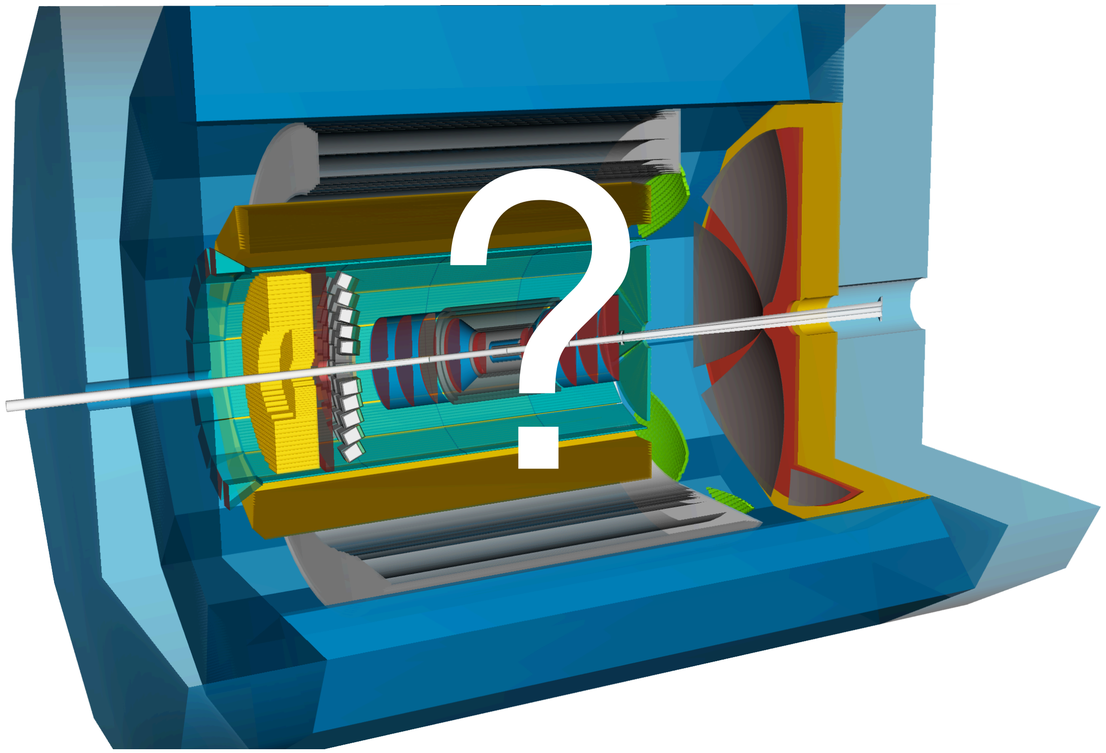

The Goal of the I/GD Subgroup is …

Design this:

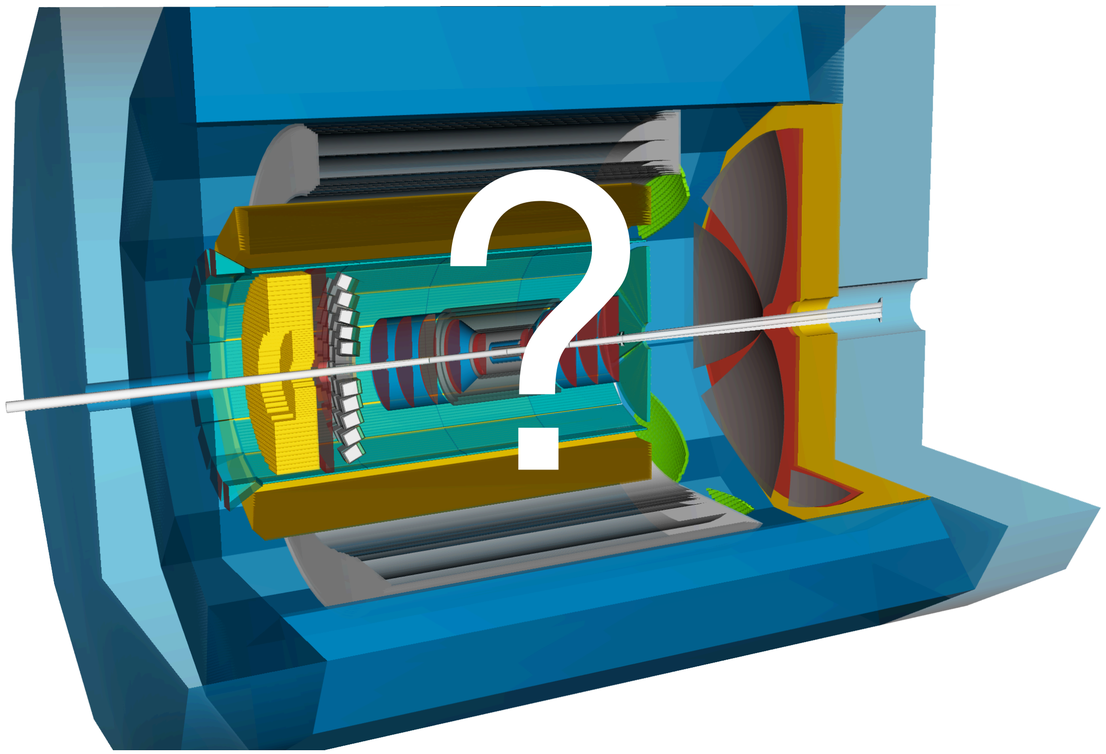

and:

- Meet all physics requirements
- Low risk
- Upgradable
- Cost effective
- Superior to other concepts

The Goal of the I/GD Subgroup is …

Design this:

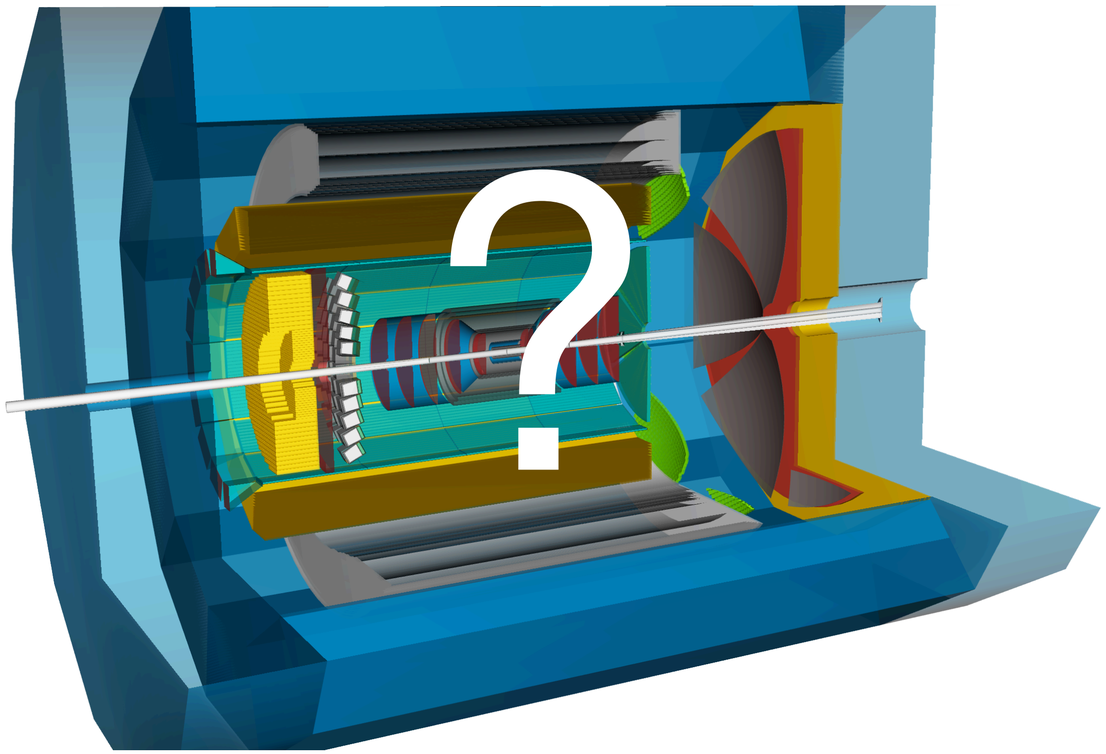

and:

- Meet all physics requirements
- Low risk
- Upgradable
- Cost effective
- Superior to other concepts

with:

- Detector Working Groups
- Engineers
- Project
- Software Group
- DD4HEP
- Physics Working Groups
- Patience
- Little Time

The Goal of the I/GD Subgroup is …

Design this:

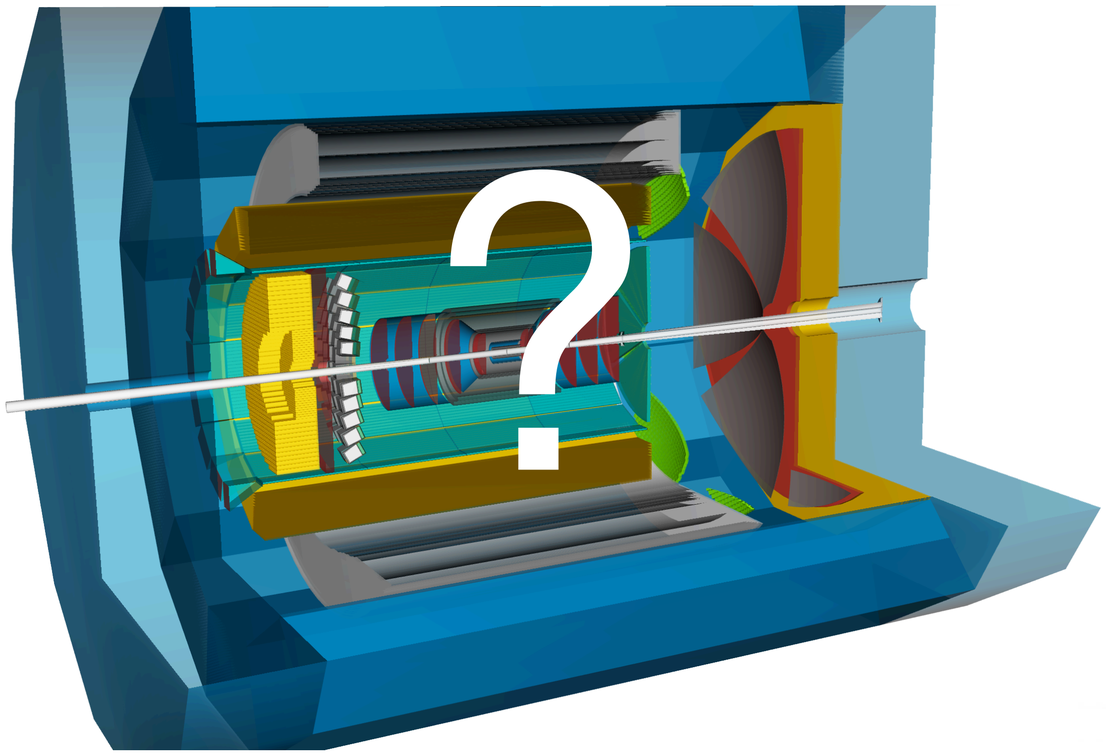

and:

- Meet all physics requirements
- Low risk
- Upgradable
- Cost effective
- Superior to other concepts

with:

- Detector Working Groups
- Engineers
- Project
- Software Group
- DD4HEP
- Physics Working Groups
- Patience
- Little Time

In a constructive and friendly way

Organization

- Weekly Meeting on Wednesday 11:00 EDT
  - `https://indico.bnl.gov/category/378/`
  - Committee + Invited Colleagues (varying, DWG & PWG conveners, Software, …)
- Wiki Pages
  - `https://wiki.bnl.gov/athena/index.php/Integration`
- Project Support/Contact
  - Elke Aschenauer
  - See also project relate info at `https://wiki.bnl.gov/athena/index.php/Project`

Reminder: Detector Configuration Tags

R-M.m

R = Region: Can be one of

- B = barrel
- P = positive z, η = forward = p/A-going
- N = negative z, η = backward = e-going

M = Major version number

- Unique set of subsystems
- M++ if combination of subsystems change

m = Minor version number

- indicates version of geometry
- m++ if position or size in M changes

A combination of B/N/P when implemented as a group gets a **configuration name**

So far:
baseline
baseline+

N.B.: Higher numbers do not imply being closer to final design.

Ongoing: Baseline (B-0.0/P-0.0/N-0.0)

- Purpose: Simple/minimal configuration to get started
- This is the first configuration for validation to be used by the Physics WG
  - Field: Solenoidal
  - B-0.0 = All-Silicon Tracker (no MPGD) + HP-DIRC + EMCAL + HCAL (Fe/Sc)
  - P-0.0 = Si-Disks + GEM Layer + dRICH + EMCAL (W powder/ScFi) + HCAL (Fe/Sc) + B0 + Off-Momentum + Roman Pots + ZDC
  - N-0.0 = Si-Disks + GEM Layer + mRICH + iEMCAL (PbWO4) + oEMCAL + HCAL (Fe/Sc) + Low-Q2 Tagger

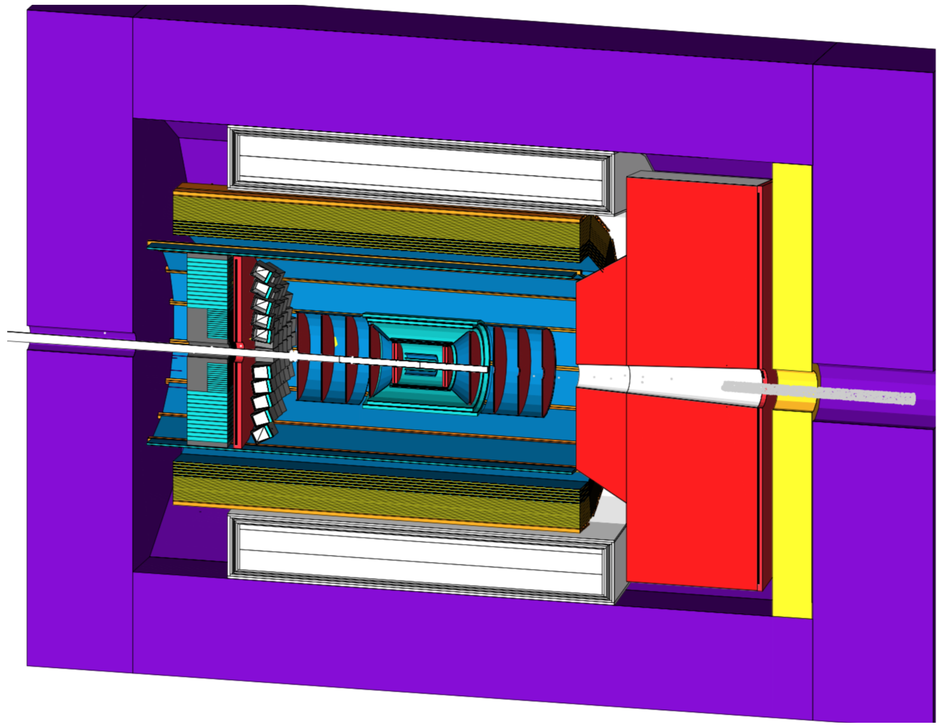

- Status
  - Implemented in DD4HEP
  - Simulations and validation ongoing
  - Awaiting assessment

Next: Baseline+ (B-1.0/P-1.0/N-1.0)

- Purpose: First refinement, Hybrid Tracker
  - Major changes only to tracking system
  - Details in Wiki - Example:

Barrel B-0.x [edit]

Silicon Trackers (B-0.0) [edit]

Silicon Tracker (2 Vertex + 4 Barrel Layers)

R (cm)	Length (cm)	Resolution	Active Area Material (X/X0 %)
3.3	30.0	10 um pixel pitch	0.05
5.7	30.0	10 um pixel pitch	0.05
21.0	54.0	10 um pixel pitch	0.55
22.68	60.0	10 um pixel pitch	0.55
39.3	105.0	10 um pixel pitch	0.55
43.23	114.0	10 um pixel pitch	0.55

Barrel B-1.x [edit]

Silicon Trackers (B-1.0) [edit]

Silicon Tracker (3 vertex + 2 barrel layers)

R (cm)	Length (cm)	Resolution	Active Area Material (X/X0 %)
3.64	42.0	10 um pixel pitch	0.05
4.45	42.0	10 um pixel pitch	0.05
5.26	42.0	10 um pixel pitch	0.05
13.38	84.0	10 um pixel pitch	0.55
18.0	84.0	10 um pixel pitch	0.55

MPGD Trackers (B-1.0) [edit]

Micromegas Barrel (2 + 4 barrel layers)

R (cm)	Length (cm)	Resolution	Active Area Material (X/X0 %)
47.715	188.0	150 um (r-phi) x 150 um (z)	0.4
49.57	188.0	150 um (r-phi) x 150 um (z)	0.4
71.89	188.0	150 um (r-phi) x 150 um (z)	0.4
73.75	188.0	150 um (r-phi) x 150 um (z)	0.4
75.61	188.0	150 um (r-phi) x 150 um (z)	0.4
77.47	188.0	150 um (r-phi) x 150 um (z)	0.4

Decision at I/GD Meeting (9/15): Go ahead for implementation and production with baseline+ (instead of jumping to next one (B/N/P-2.0) right away)
Reason: SW group is quite advanced with implementation and rather have moderate changes that are validated than a big jump ahead

What's Next?

Little time left, proposal deadline approaching fast

- Need to converge on "final" design rather fast
- Need validation that it can be constructed - validation in collaboration with engineers
- Many new good ideas will need testing and if favorable need to be mentioned in the proposal as potential upgrades enriching and expanding our physics program
- Need to address various issues, among them:
  - Material in front of EMCal, especially in the backward region
  - Position and Space for dRICH

Action:

- I/GD requested state-of-the art configuration by DWGs with focus on tracking and PID (B-2.0/P-2.0/N-2.0)

Material in front of EMCal

Use simple setup for simulations:

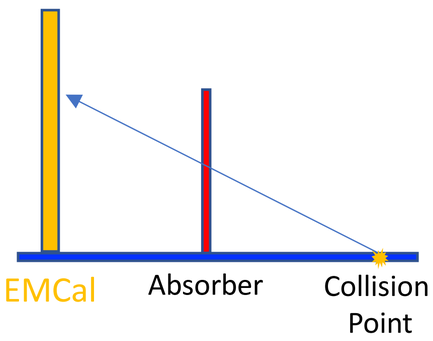

See talk by A.Bazilevsky in Cal & Tracking WG on August 30/31

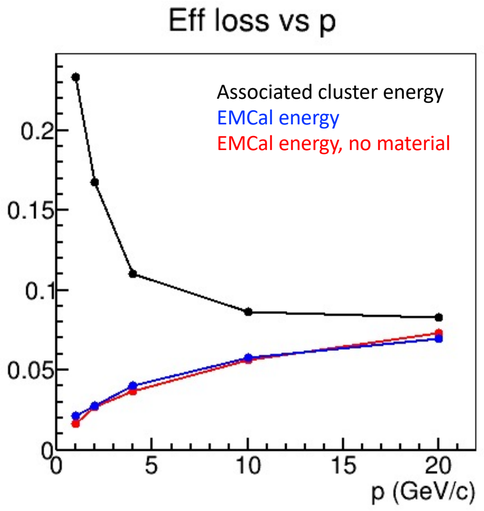

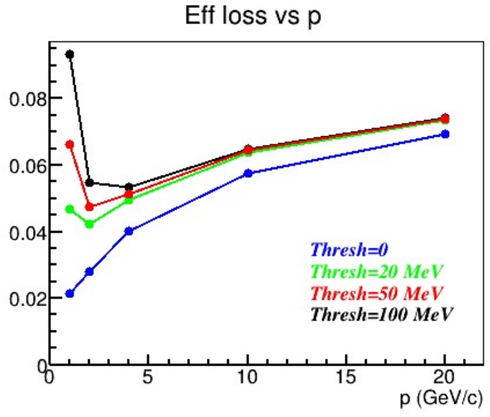

Findings

- For the material of < 0.5*X_0, no energy is missing for ECAL redo
  - The key question is how well we can reconstruct/associate the energy related to original electron
- e-track associated cluster – not enough
  - Need to combine electron cluster with accompanying radiation
  - Need to measure photons to as low energy as possible (down to 20 MeV)

Conclusion

- 5%X_0 looks ok, 10%X_0 may be acceptable
  - Need to include clusters from radiated photons
  - Negative impact of material is smaller the close to EMCAL (no effect from 10% X_0)

Material in front of EMCal

Use simple setup for simulations:

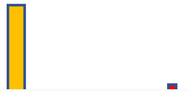

See talk by A.Bazilevsky in Cal & Tracking WG on 31

Findings

- For th
  - Th rel
- e-trac
  - Ne
  - Ne

Conclusio

- 5%X
  - Ne
  - Ne 10% X_0)

Issue especially in backward region:

- Backward is most critical for e-PID
- Use of state-of-the art PbWO4 for good resolution
- Currently in N-1.0 and N-2.0 the amount of material exceeds 10%
- Not much to be reduced in tracking
- mRICH too thick
  - modify mRICH design
  - consider alternative single volume designs: a couple of schemes proposed to be validated within PID WG (see slide no. 16)

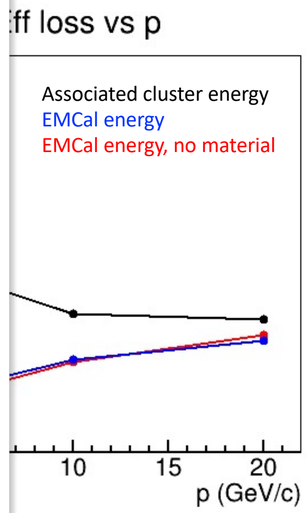

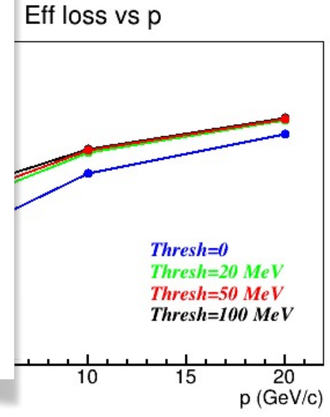

dRICH - Initial Configuration

- ~25^0 (η = 1.5) is a *large angle* (compare to θ_V^{max} ~15^0 in LHCb RICH1)
- In order to avoid shadowing of the primary $2^0..25^0$ acceptance on a short focal distance one must use a rather substantial off-axis optics setup
- This does work, but the aberrations become too large and one can not effectively contain the focal plane inside the vessel in the whole angular range.

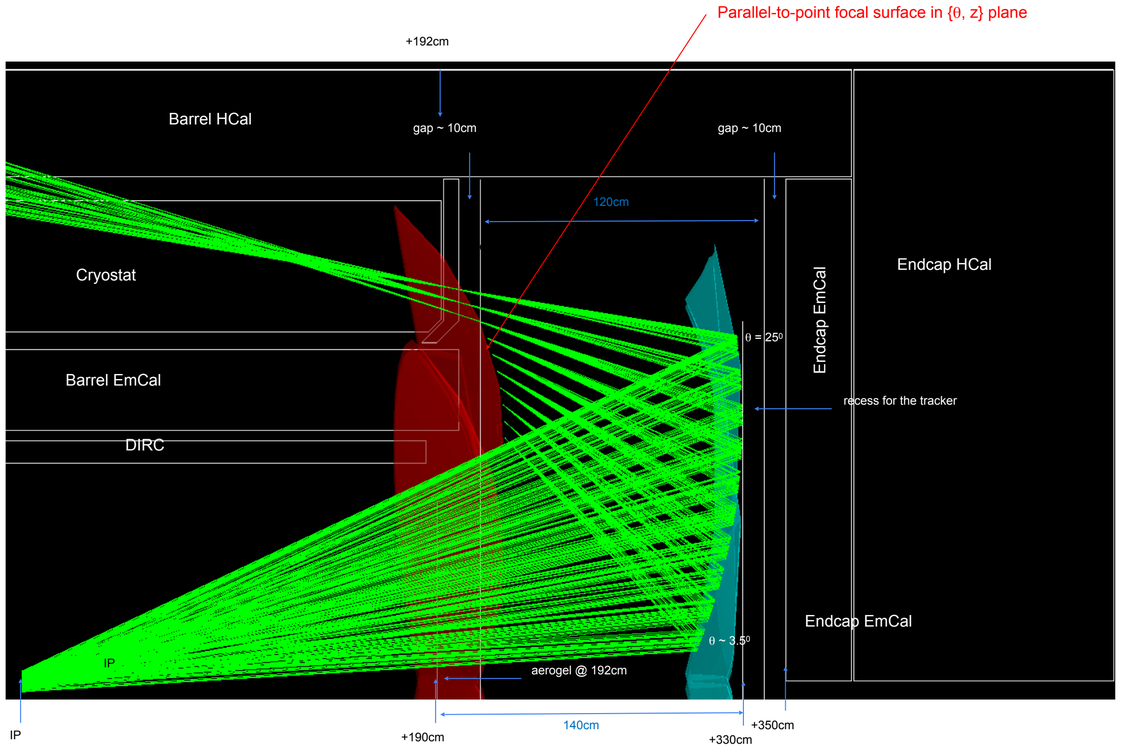

- The picture shows the best-case scenario in the original space allocation: iocusing does almost work in {theta,z} plane as shown on the picture, but 1) leaves too little space between the sensor plane and the vessel wall, 2) the focal plane in {ϕ,z} plane is in fact outside of the vessel, and IRT can not recover loss of the angular resolution

Integration - Shift of Magnet (25cm)

E. Aschenauer I/GD mtg

Worked out by project:

- novel configuration, information distributed this week
- shift the magnet by 25 cm towards the electron endcap
- gives enough space for the dRICH
- get service gaps we need and can support the heavy barrel ECal
- To test:
  - tracking In Fwd/Bkwd
  - higher B field at DIRC exp. volume

Affecting simulations: new field map might take ~2 weeks

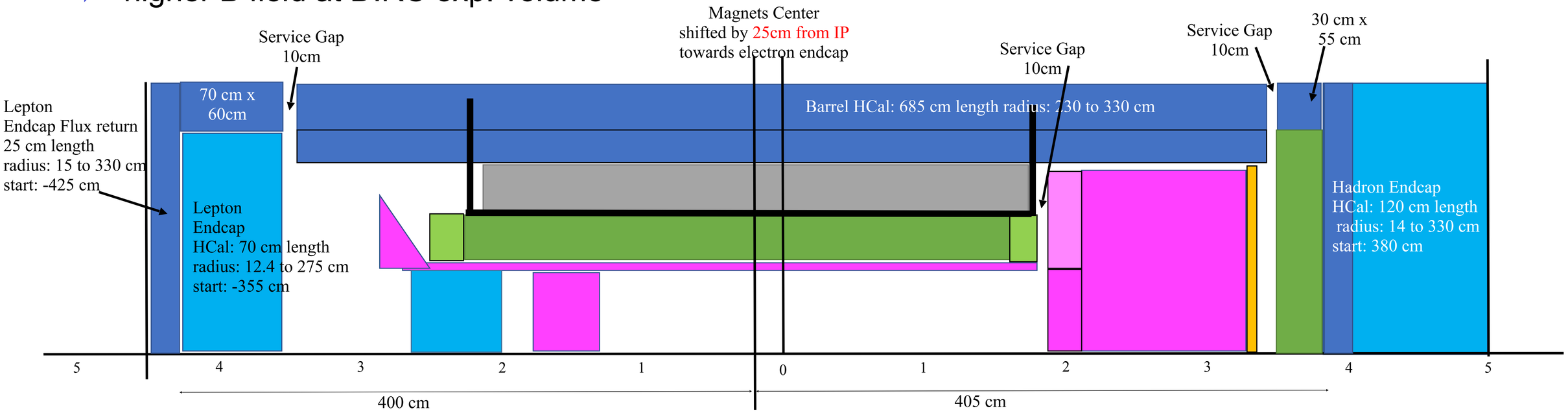

Dark blue indicates steal which is used as flux return, sometimes as part of the detector

Impact on dRICH

A. Kiselev I/GD mtg

- Reasonable optics & performance, distortions below 1mrad at small angles
- Angular coverage is ~ [1.5 .. 4.0] in η
- 15cm gap between the sensor plane and the vessel wall
- “Upgrade space” of 20-25 cm upstream of the vessel
- dRICH snout, 7-th forward silicon disk, TRD, ToF, …

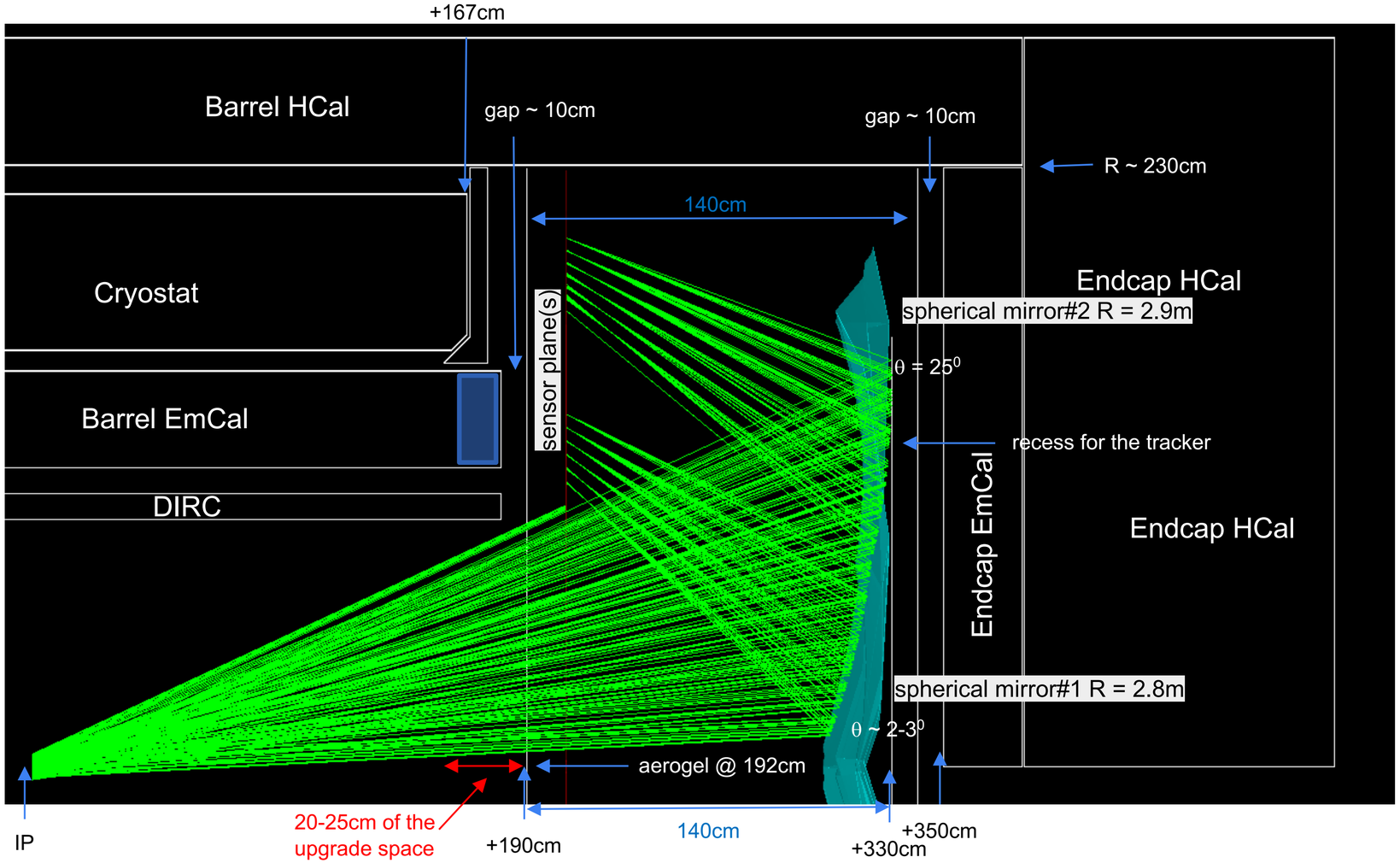

Tracking WG Input for Next Iteration: Barrel

- **Barrel**: pretty settled by now - converging on hybrid setup
  - 3 D-MAPS Vertex layer
  - 2 D-MAPS tracking layer
  - 4 (2x2) MMG layer
  - No MPGD layer after DIRC since ECAL's first layer is Si (AstroPix) layer with $\sigma \approx 500/\sqrt{12}\ \mu\mathrm{m} = 144\ \mu\mathrm{m}$
  - Design leaves plenty of room for possible future upgrades
    - ToF (AC-LGAD/LAPPD)
    - miniTPC (GridPix)
    - high-p_T solution (RICH)

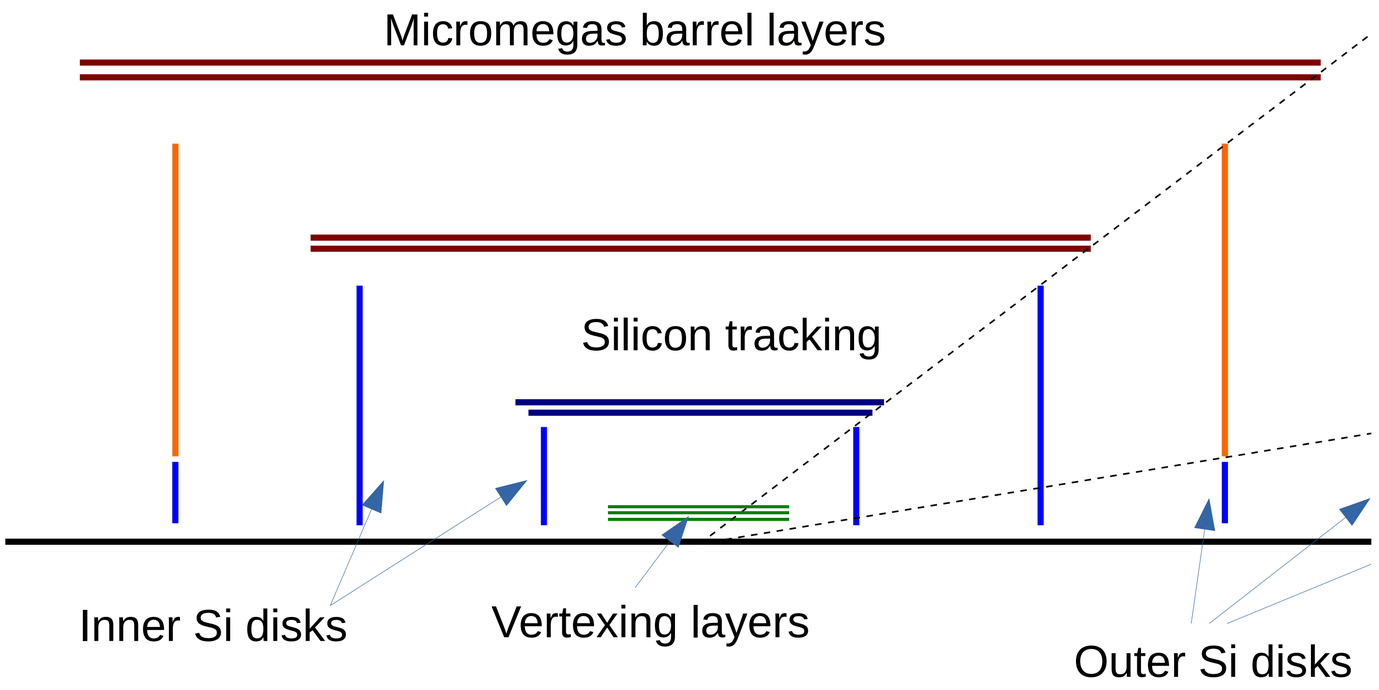

- Covers $-1.1 < \eta < 1.1$
- Minimal mass except at edges due to service (FEE, cables, …)

Tracking WG Input for Next Iteration: Fwd/Bkwd (I)

- **Fwb.Bckwd:** new projective layout
- Mix of Si disk and low mass GEM disks
- Bigger Inner Silicon disks
  - cost saving
- Overlap among technologies
  - cross-calibration, better control of systematics
- Extended forward and backward Si disks for better BdI
- Extended silicon disks up to ± 175cm may be essential for increasing the pseudorapidity coverage

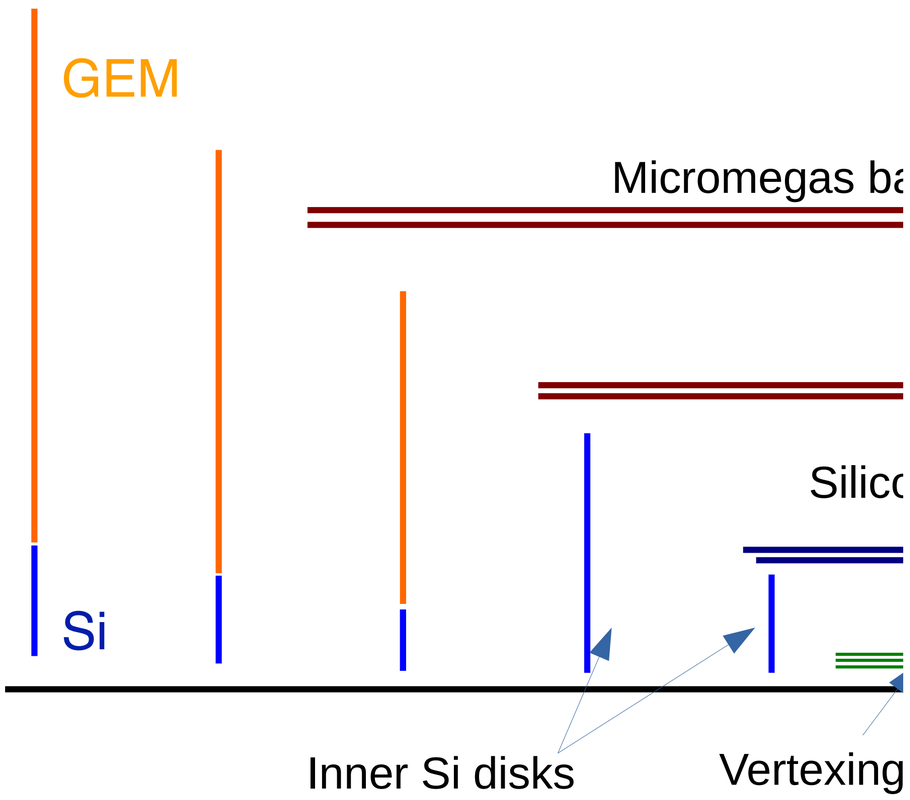

- Issues
  - disk position and diameter not optimized (see talk by E. Sichtermann at tracking meeting Sep 14)
  - Integration, service routing: not clear current layout is even possible

Tracking Input for Next Iteration

Decision at I/GD Meeting (9/15):

Improve position and size of Si vs GEM disk (1 week)
then …
Implement B-2.0, N-2.0, and P-2.0
… and go through simulation and validation process
This configuration might still be run w/o the 25 cm magnet shift if the revised field map is not available

At the same time engage in discussions with engineers to establish feasibility.

PID WG Input for Next Iteration

- dRICH
  - magnet shift solves major problems
  - PID WG: studies of performance in greater detail incl. solenoid versus Helmholtz magnet configuration (see previous integration talk)
- DIRC
  - only current issue is the impact of increased B field at extension volume due to magnet shift (and of course as always photosensors)

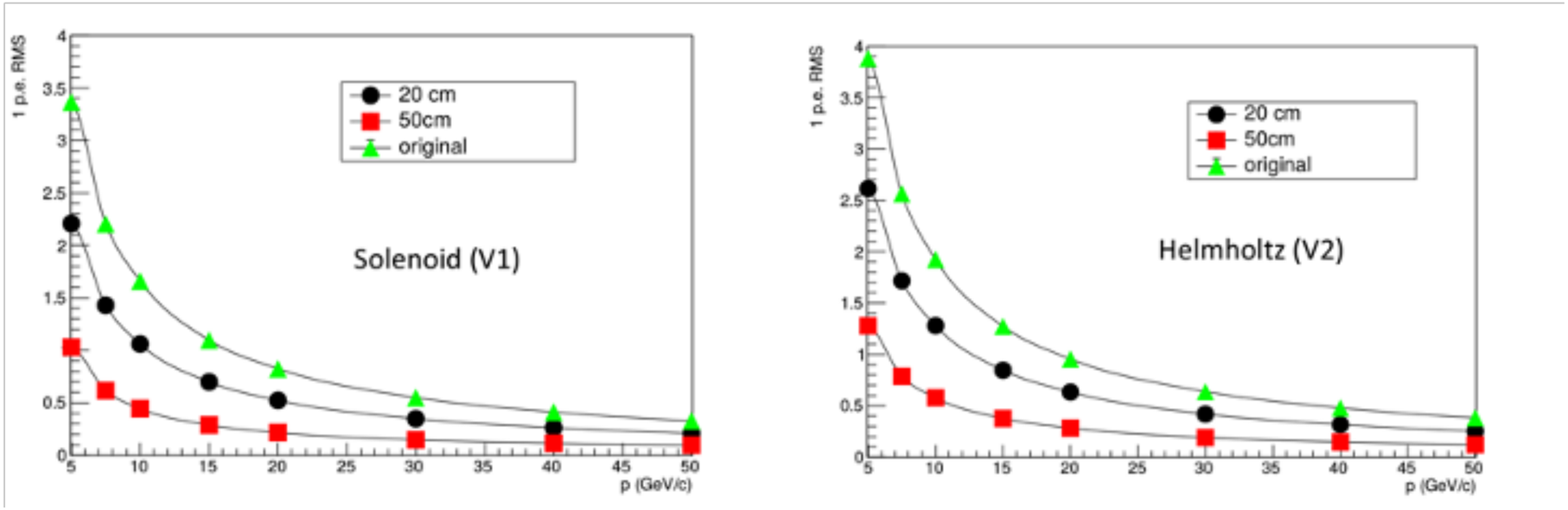

PID Input for Next Iteration

- mRICH
  - no discussion on optimizing design in terms of X/X_0 yet
- Backward RICH: Alternative Designs

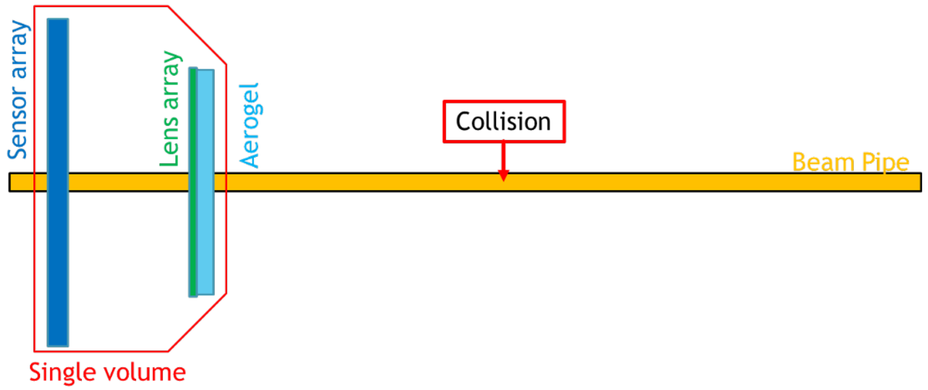

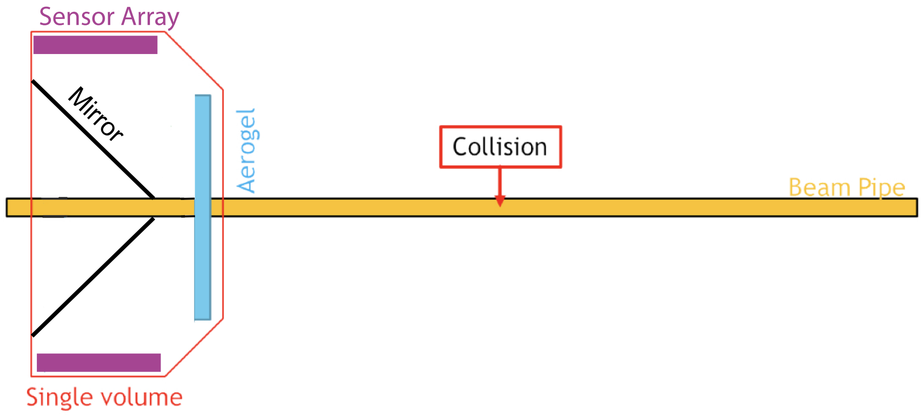

  - Monolithic geometry
  - Thinner due to no walls.
  - Support very likely thinner
  - Optics options:
  - proximity or focus?
  - mirror brings photosensors out of the way

Decision at I/GD Meeting (9/15): Pursue alternative options. Unclear as of yet what goes into proposal.

Calorimetry, Far-Forward, Far-Backward

- Calorimetry
  - fine-tuning DD4HEP implementation
  - ready to start writing
  - Issue:
    - need for reduction of material in from of ECALs
    - gap in em calorimetry at around eta ~1.3
- Far-Forward, Far-Backward
  - no known issues that prevent DWGs from writing

Decision at I/GD Meeting (9/15):
Calorimetry, Far-Forward, Far-Backward should start writing their part of proposal

ToF, miniTPC

- WG groups are encouraged to pursue implementation in DD4HEP and simulation runs to establish performance
  - Use major version numbers of 10.0-15.0 please
- Examples& Issues:
  - ToF with AC-LGAD
    - power consumption, material thickness
    - need realistic design in DD4HEP
    - R&D needed
  - miniTPC
    - material, especially on endocarps and their impact need to be studies
  - TRD (tracking & PID
  - Both: Impact on ECAL

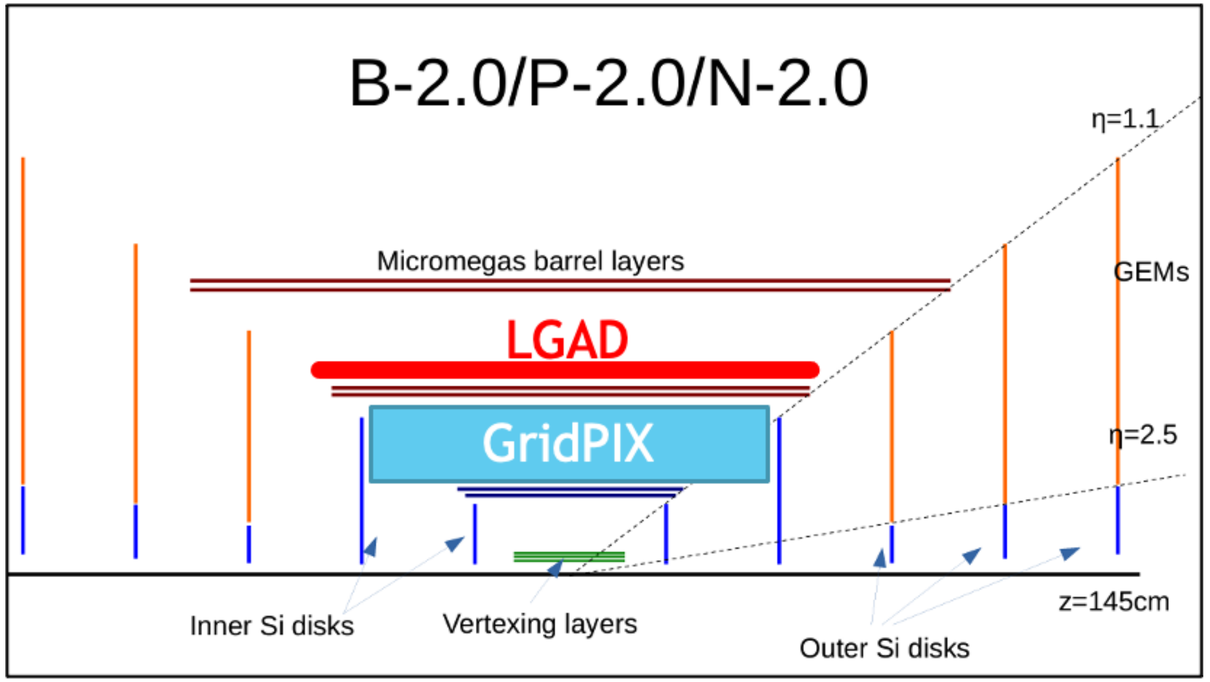

Decision at I/GD Meeting (9/15): WG groups can implementation detectors in DD4HEP and produce simulation runs to establish performance, respecting the overall priorities of the global Proposal

Where We Stand

We are converging on a general design

- Many parts well well defined by now

Biggest issues

- Fwd/Bckwd tracking (optimization/integration)
- Backward RICH

Overall design will have shortcomings that we cannot hide

- low-p_T PID in barrel
  - low B field runs & exploring full DIRC capabilities might compensate to some extent
- low-p PID below aerogel threshold (1-3 GeV)
  - waiting for PWG to tell us if this is an issue at all
  - if so what are the requirements?
- We are not hermetic but have regions of high X/X_0 (support structure). This will have to be a big part of a detailed design to come after the proposal.

We need guidance from costing group

- MPGD versus Si

Summary of Next Steps

- Finish *baseline* production and complete verification
- Implement and run *baseline*+ and complete verification

- Next configuration
  - Tracking: improve and optimize Fwd/Bkwd tracking (1 week)
    - Implement in N-2.0 and P-2.0
  - Barrel hybrid tracking as suggested
    - Implement in B-2.0
  - PID: pursue backward RICH alternatives
    - Implement as N-2.0
- In parallel discussion with engineers on feasibility of integration/ implementation
  - address issues related to integration