Inputs and updates from EIC SC on technology

L. Gonella on behalf of the EIC

EIC Detector 1 Meeting

23 June 2022

Introduction

- The technology chosen for the EIC Detector 1 Silicon Vertex and Tracking Detector is the ITS3 MAPS sensor.
- For the vertex layers, we will adopt the ITS3 sensor and the ITS3 detector concept.
- For the sagitta layers and disks, we will create a smaller version of the ITS3 sensor and develop our own support structures and cooling infrastructure.

- The EIC SC is exploring a number of optimisations of the reference design folding in technology constraints.
- This talk and the talks from Stephen and Ernst will present some of the ongoing studies for the barrel region.
- Please note that nothing is final yet.

The ITS3 sensor and detector concept

- Three layers vertex detector with 0.05% X/X0 per layer.

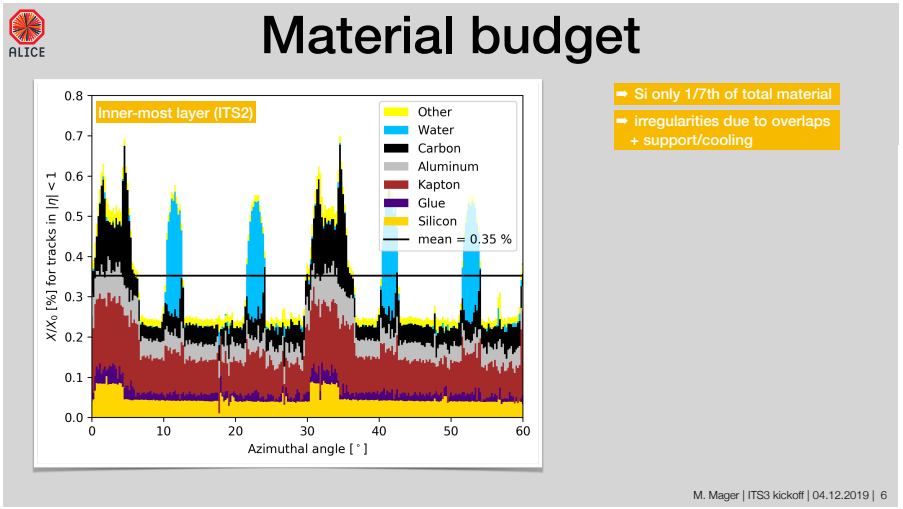

Wafer-scale, low power sensor design in 65 nm CMOS technology, thinned and bent around the beampipe.

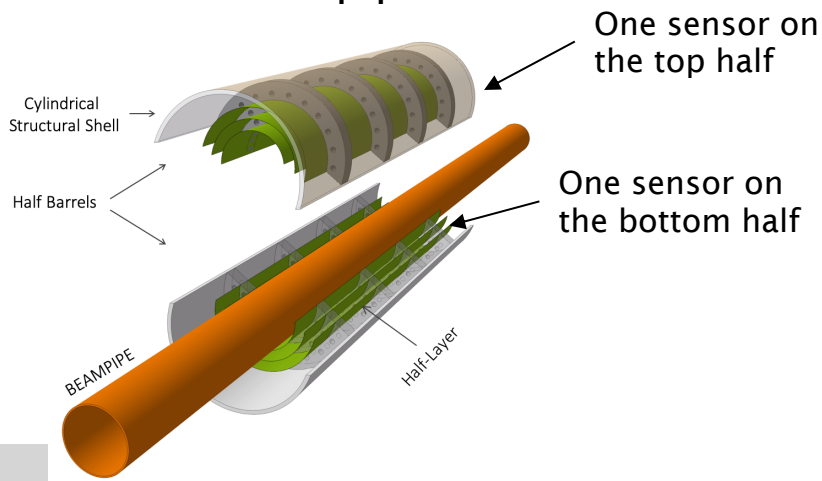

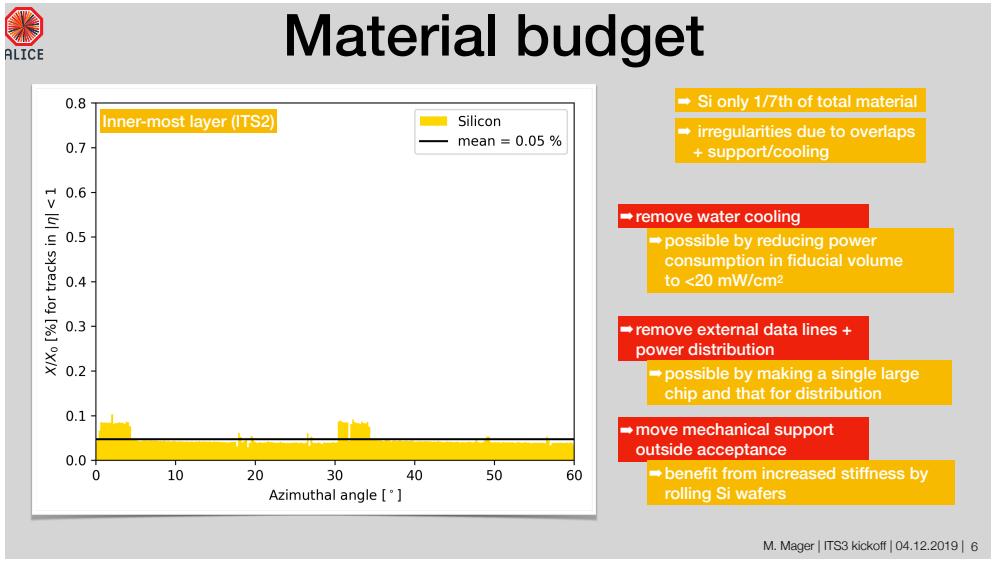

Table 1: Geometrical parameters of the upgraded ITS.

Beampipe inner/outer radius (mm)	16.0/16.5		
IB Layer parameters	Layer 0	Layer 1	Layer 2
Radial position (mm)	18.0	24.0	30.0
Length (sensitive area) (mm)	270	270	270
Pseudo-rapidity coverage[a]	±2.5	±2.3	±2.0
Active area (cm^2)	305	408	508
Pixel sensors dimensions (mm^2)	280×56.5	280×75.5	280×94
Number of pixel sensors / layer	2		
Pixel size (μm^2)	$O(15 \times 15)^b$		

[a] The pseudorapidity coverage of the detector layers refers to tracks originating from a collision at the nominal interaction point ($z = 0$).
[b] For the fallback solution the pixel size is about a factor two larger ($O(30 \times 30)\ \mu m^2$).

https://cds.cern.ch/record/2703140/

Stitching for ITS3 sensor

- Stitching deployed to design a wafer scale sensor.

Example of stitched wafer layout.

Periphery of sensor on one side.

Basic unit cell (called reticule in the following) repeated multiple times to form pixel matrix.

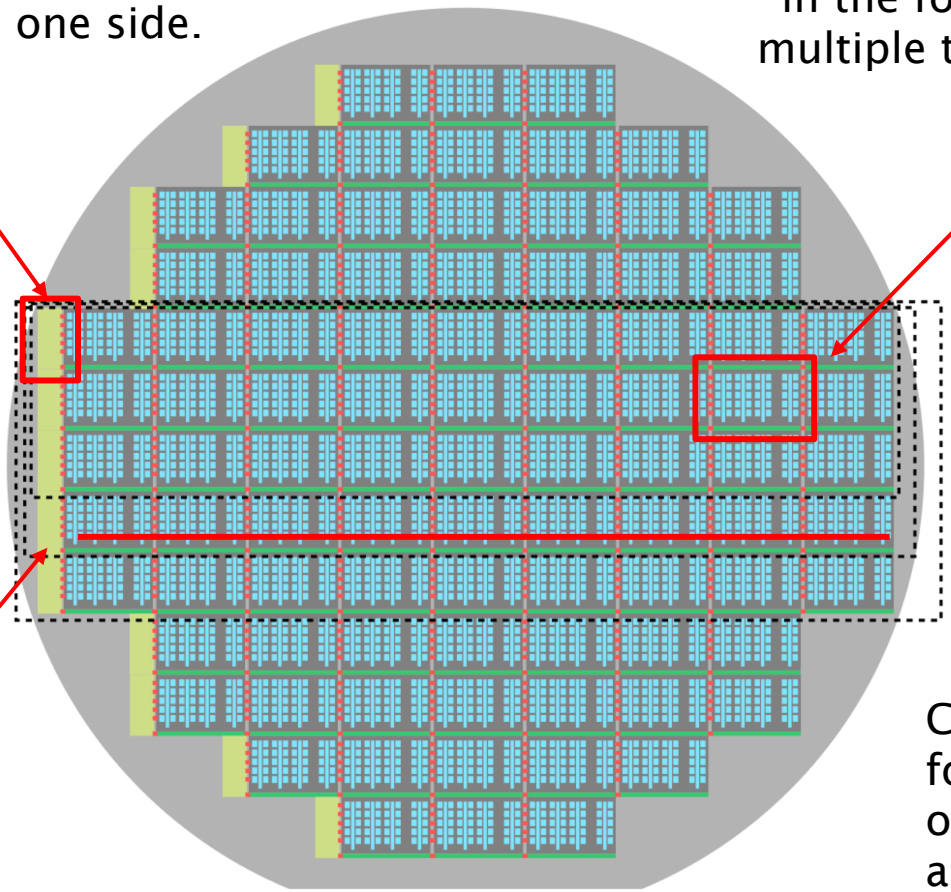

Stitching in one direction only.
It allows to use one mask to obtain different sensor widths.

Cannot cut arbitrary forms. See example of possible cutting along dotted lines.

ITS3 stitched sensor

- The ITS3 reticule size is not yet fixed!
- The best value to hit the ITS3 radii is 18.85 mm x 30 mm.

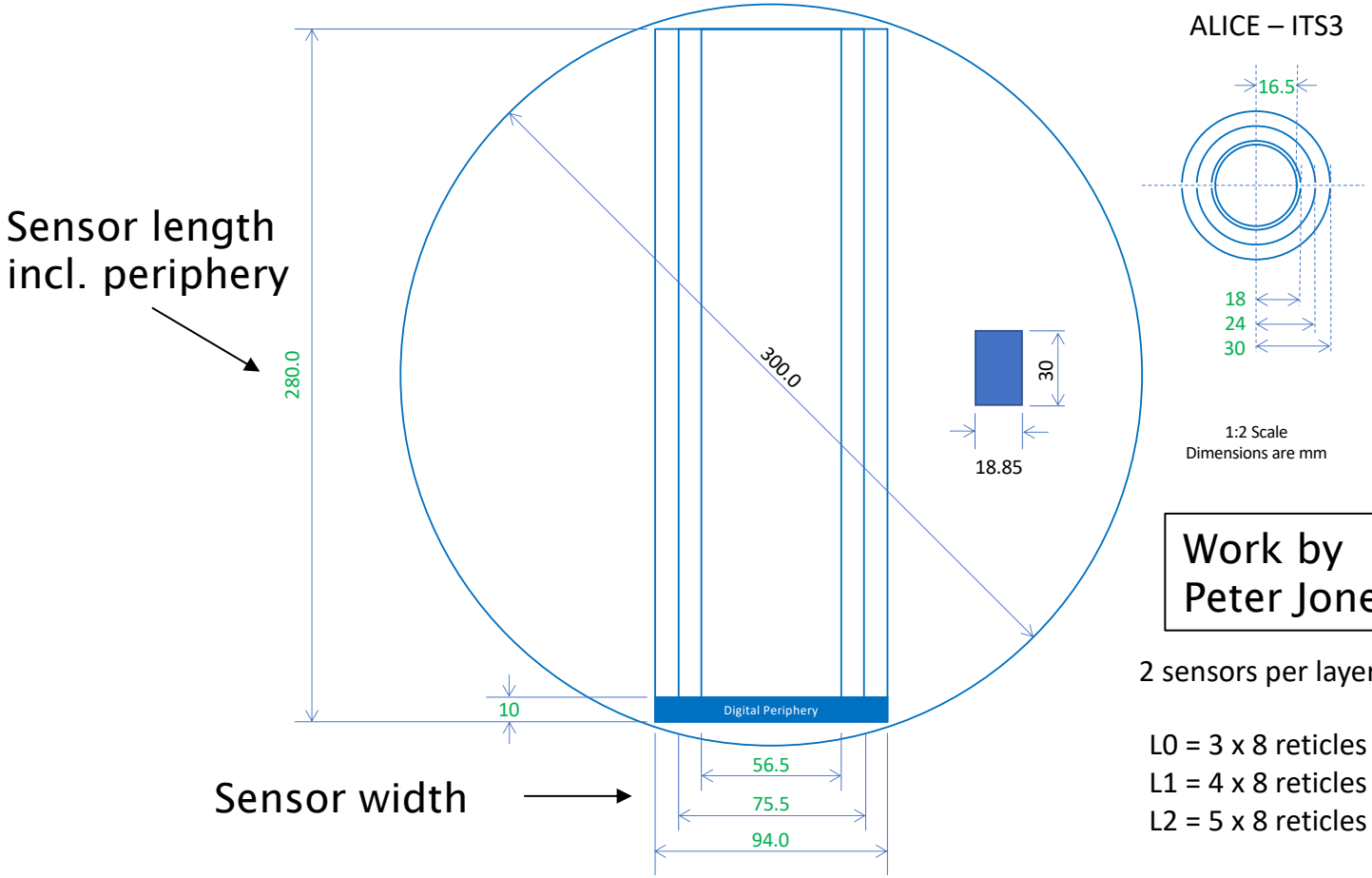

Work by
Peter Jones

2 sensors per layer

L0 = 3 x 8 reticles
L1 = 4 x 8 reticles
L2 = 5 x 8 reticles

We will NOT change the size of the ITS3 reticule because this requires resources (personnel and time) that we do NOT have.

EIC vertex layers

- Reference detector radii for vtx layers in proposal = 33/43.5/54 mm.
  - These cannot be achieved with the ITS3 reticule size.
  - We now also know for beam pipe bake up we need to be at 36 mm with the 1st layer.

- <u>Option using ITS3 sensor sizes</u>
  - 4 sensors per layer.
  - L1/2/3 radii = 36/48/60 mm.
  - L1/2/3 active length = 270 mm.
    - 280 mm w/ periphery.
    - Periphery on one side only,

  no services in active area.

This solution will require some more EIC dedicated design of the vertex layers mechanics and possibly add some more material for the support.

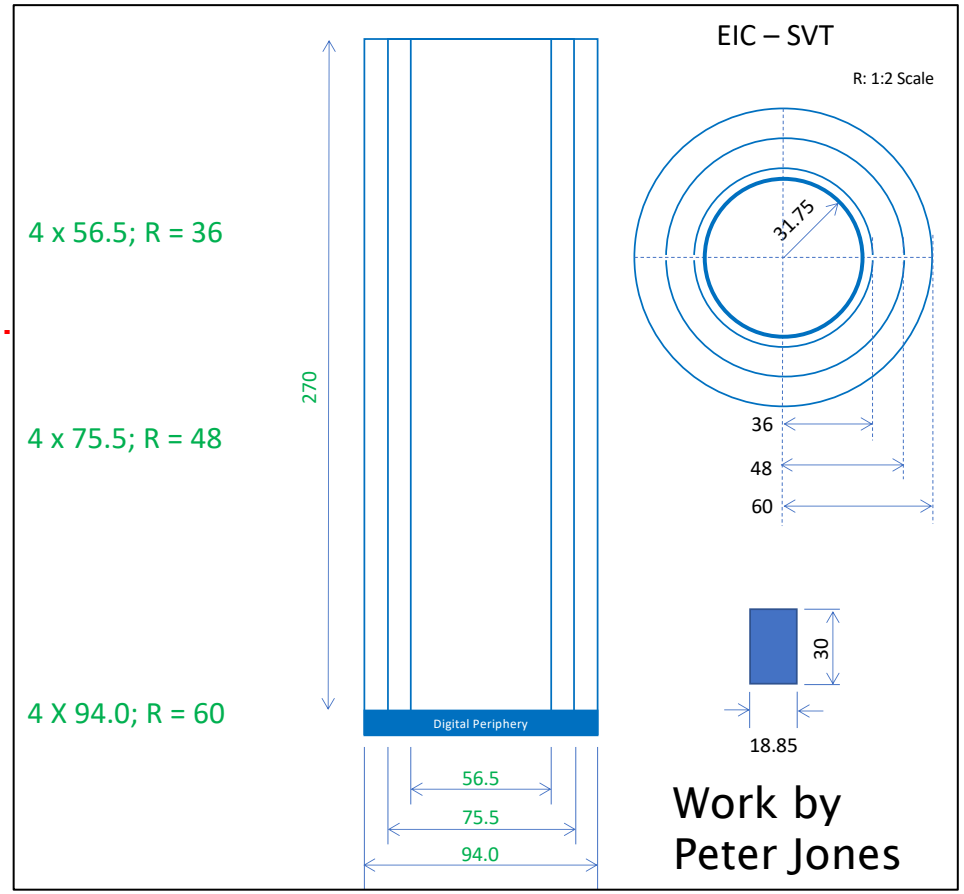

EIC vertex layers

- Option modifying stitching plan of wafer-scale sensor.
  - 2 sensors per layer.
  - L1/2/3 radii = 36/42/48 mm.
  - L1/2/3 active length = 240 mm.
    - 250 mm w/ periphery.
    - Periphery on one side only, no services in active area.

This solution will require more designer time and an EIC specific mask for fabrication of the vertex detector as well → more expensive.

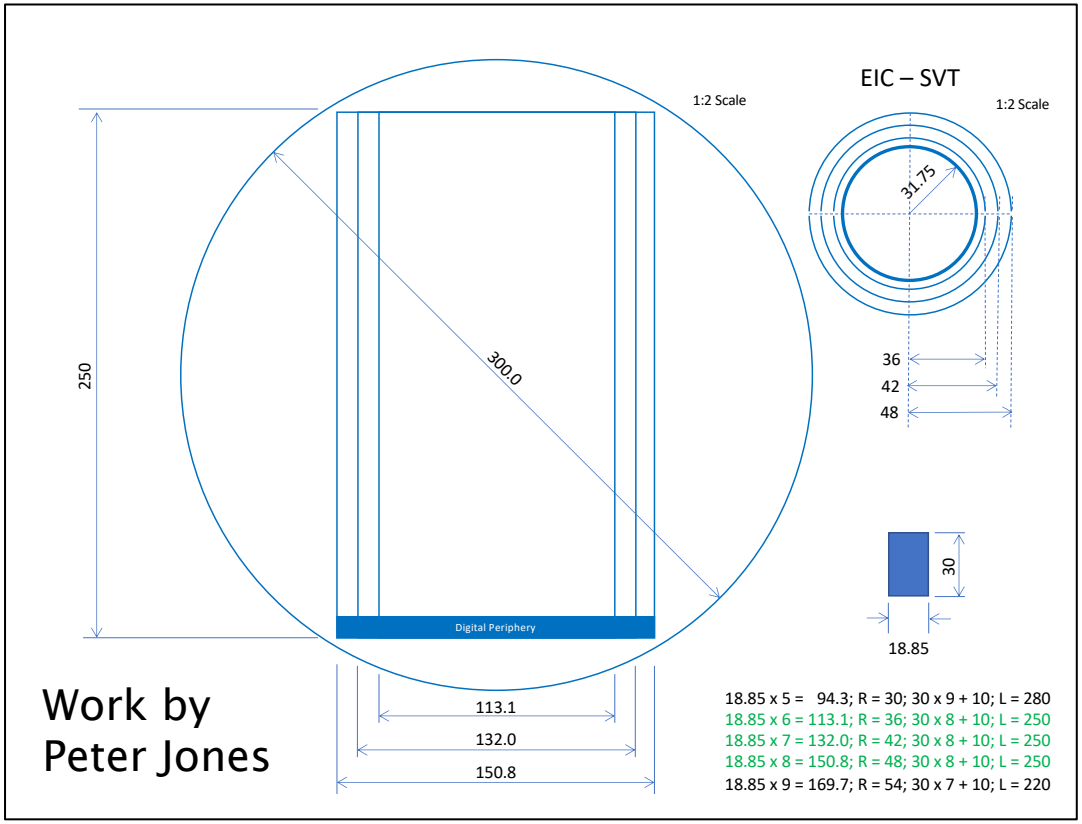

Work by Peter Jones

Stephen's talk will show simulations of these two options.

Ernst's talk will show a re-arrangement of vertex layers.

EIC barrel layers

- Reference detector barrel layers in proposal:
  - L4: R = 210 mm, L = 540 mm.
  - L5: R = 227 mm, L = 600 mm.

- There are various arguments why these layers cannot have the same configuration as the vertex layers and need more conservative support structures and cooling that inevitably increase the material.
  - Stitched, wafer-scale sensor yield.
  - Air cooling and stability of larger structures.
  - Depending on radius, length might exceed 2x max sensor active length (i.e. 54 cm); if more that 2 sensors are needed in z, services need to run along stave, which impacts material.
    - This is the case for the L5 of the reference detector.

- The original estimate by the EIC SC for barrel layers X/X0 is 0.55% X/X0 → this number is conservative and very likely to go down.
  - Initial thoughts on what might be possible in Ernst's talk.

EIC barrel layers

- For the barrel layers we will need to create a stitched, large but not wafer-scale sensor – EIC Large Area Sensor (LAS).

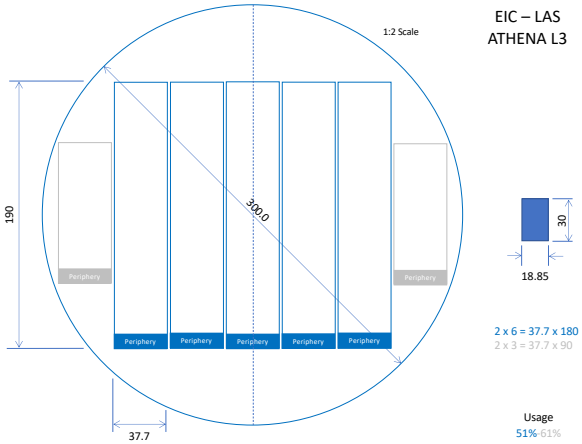

Example study of LAS sizes to maximise wafer usage using ECCE/ATHENA radii.

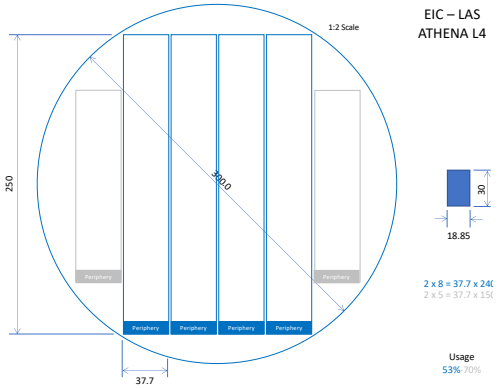

Work by Peter Jones

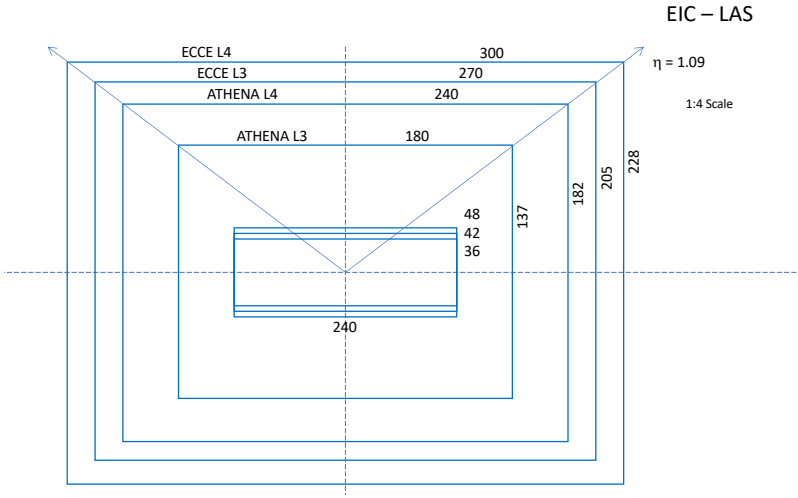

Note: radii and lengths adjusted slightly to work with reticle size 18.85 x 30.00 mm^2
Length of vertex layers is made of one sensor read out at ONE end
Length of barrel layers is made of two sensors read out at BOTH ends
ATHENA L3 = 2 x 6 reticles (5 per wafer; usage = 51%; 48 LAS required; 10 wafers)
ATHENA L4 = 2 x 8 reticles (4 per wafer; usage = 53%; 64 LAS required; 16 wafers)
ECCE L3 = 2 x 9 reticles (2 per wafer; usage = 30%; 72 LAS required; 36 wafers)
ECCE L3 = 5 x 9 reticles (1 per wafer; usage = 37%; 32 LAS required; 32 wafers)
ECCE L4 = Length not achievable with two single-wafer sensors

Initial work on disks

- Disks design is challenging to balance low material with full acceptance, down to the beam pipe.
- Various tiling options considered trying to find some common sensor sizes with some different sizes/shape to close around the beam pipe and at disk outer radius.

Example studies of best way to tile disks

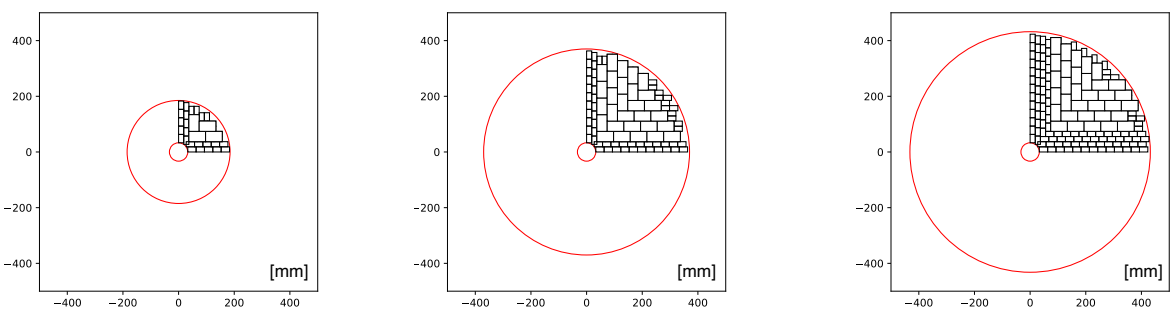

Work by Ernst Sichtermann

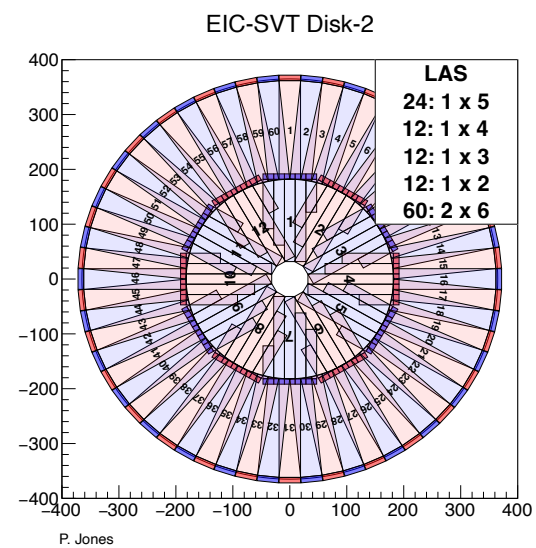

Work by Peter Jones