# Far-Forward Detector Background Embedding Needs

Alex Jentsch (BNL), John Arrington (LBNL),
Yuji Goto (RIKEN), Michael Murray (U. Kansas)

EPIC GD/I Meeting

August 22nd, 2022

BROOKHAVEN NATIONAL LABORATORY
Jefferson Lab
U.S. DEPARTMENT OF ENERGY | Office of Science

# Primary background sources

- Beam+gas interactions.
- Beam+machine component interactions.
- Primary vertex backgrounds.
- Beam halo.
- Detector/electronic noise.

# Primary background sources

- Beam+gas interactions.
  - Production of secondaries from beam+stray gas collisions. Studied before for the Roman Pots (https://indico.bnl.gov/event/12809/).
- Beam+machine component interactions.
  - Secondaries produced from beam particles hitting machine components.
  - Different impact on ZDC (studied previously by V. Baturin for eRD27 – rates tolerable for PWO4 crystals; what about silicon and PMTs?) and Roman Pots/OMD.
- Primary vertex backgrounds.
  - Issue for the B0 – e.g. beam+gas at the IP.
- Beam halo.
  - Is 10$\sigma$ really safe?
- Detector/electronic noise.
  - Probably not a major problem for the proton detectors – could pose a problem for low-energy photons (~100 MeV)

# The Far-Forward Detectors

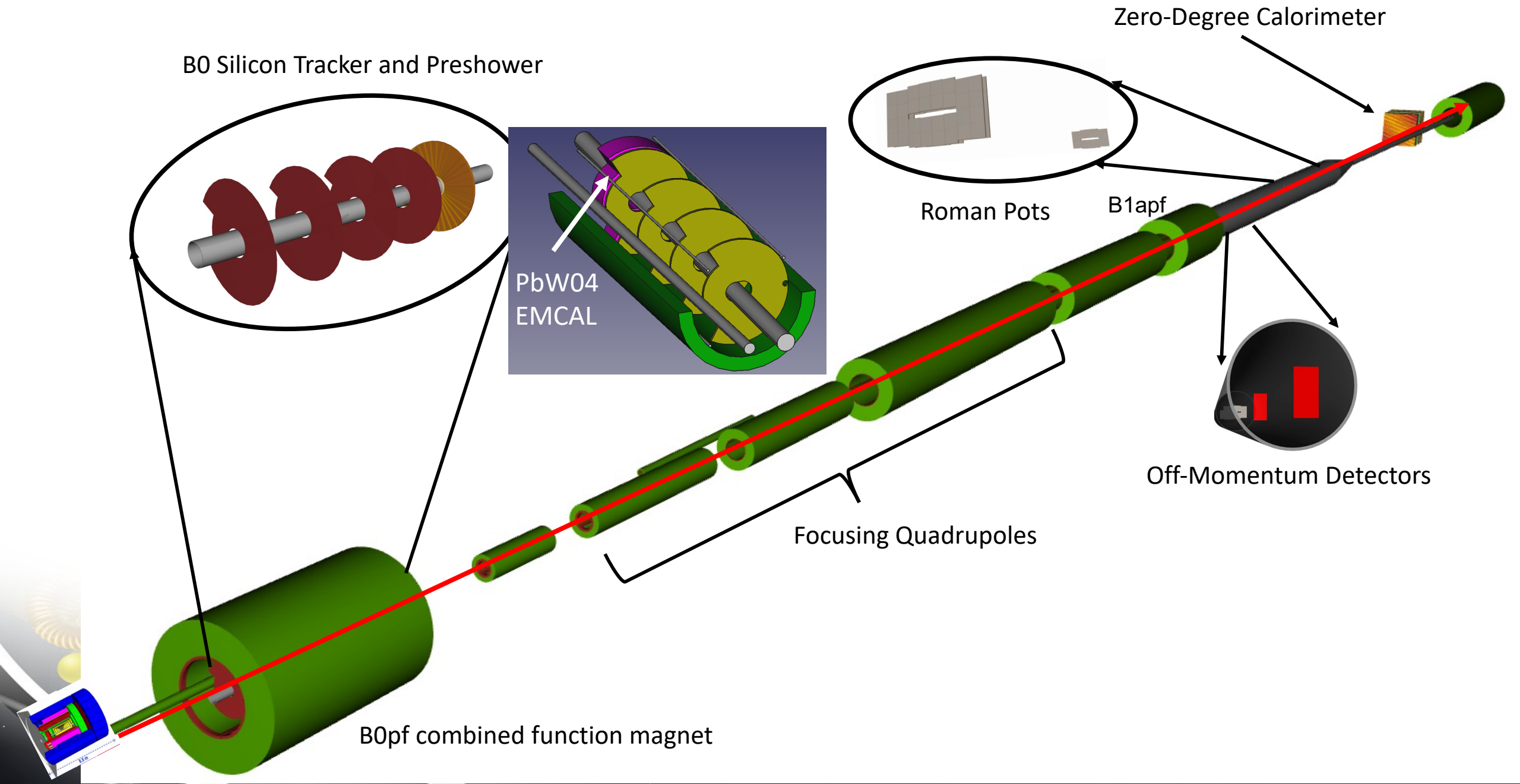

# The Far-Forward Detectors

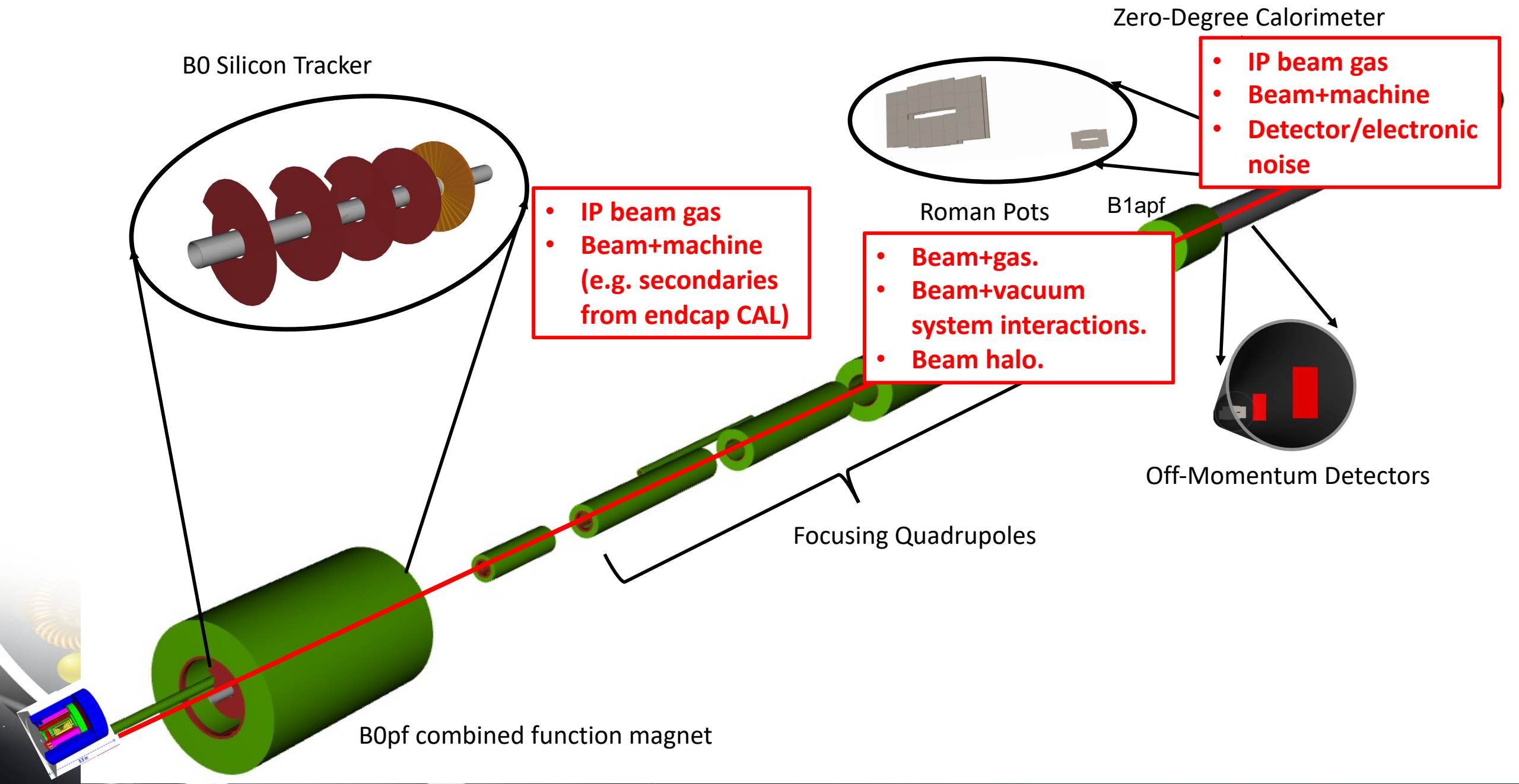

# What do we need?

- Beam+gas
  - Embedding of fixed target collisions of p/A beams with (primarily) $H_2$ gas in the beam pipe.
  - Final-states are produced secondaries, embedded with real physics events.
- Beam+machine
  - Embedding of collisions of p/A beams with machine components. Computing-intensive (beams penetrating dense metals and producing secondaries).
  - Different considerations for neutrons/photons showering in beam pipe exit to ZDC, and beam halo producing shower particles toward Roman Pots/OMD.
- Beam halo
  - Need to work with machine group to learn what initial beam halo simulations need to be done such that we can import events, or generate comparable events with GEANT particle gun, and then study rates on the detectors.
- B0 impact
  - Study impact of IP beam+gas (more-challenging pressure profile) interactions, and secondaries from endcap calorimeter.
- Electronic noise, timing, etc.
  - DD4HEP has some classes already to handle this – will investigate further.

# Discussion

# Far-Forward Detector Subsystems

# B0 Detectors

- Charged particle reconstruction and photon tagging.
  - Precise tracking (~10um spatial resolution).
  - Fast timing for background rejection and to remove crab smearing (~35ps).
  - Photon detection (tagging or full reco).

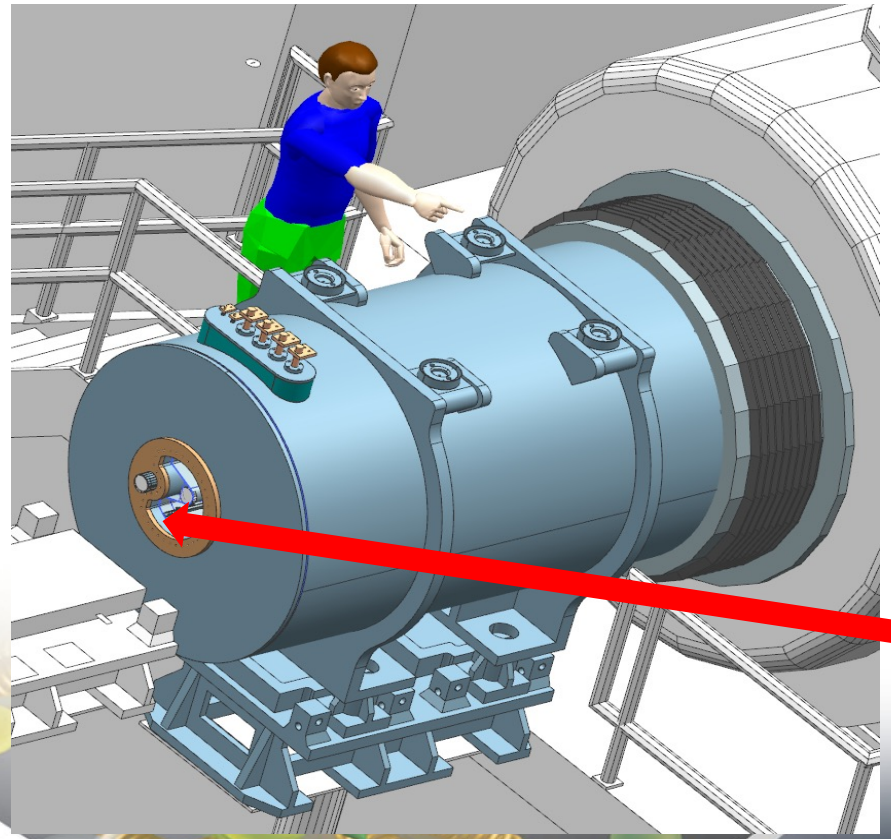

This is the opening where the detector planes will be inserted

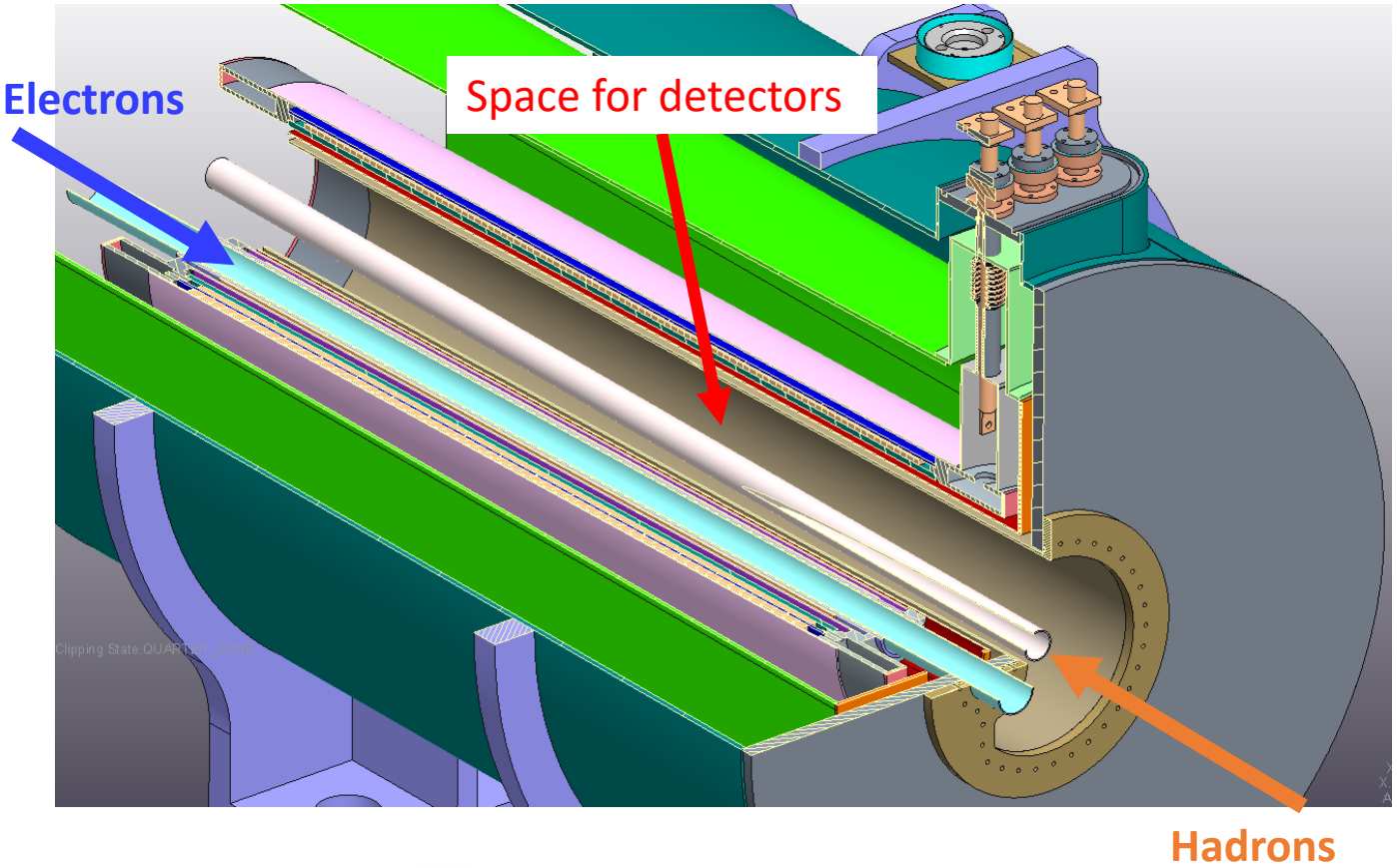


Preliminary Parameters:
229.5cm x 121.1cm x 195cm
**(Actual length will be shorter)**

# B0 Detectors in CAD

Credit: Ron Lassiter and Karim Hamdi

Blue lines represent where element locations are along beamline

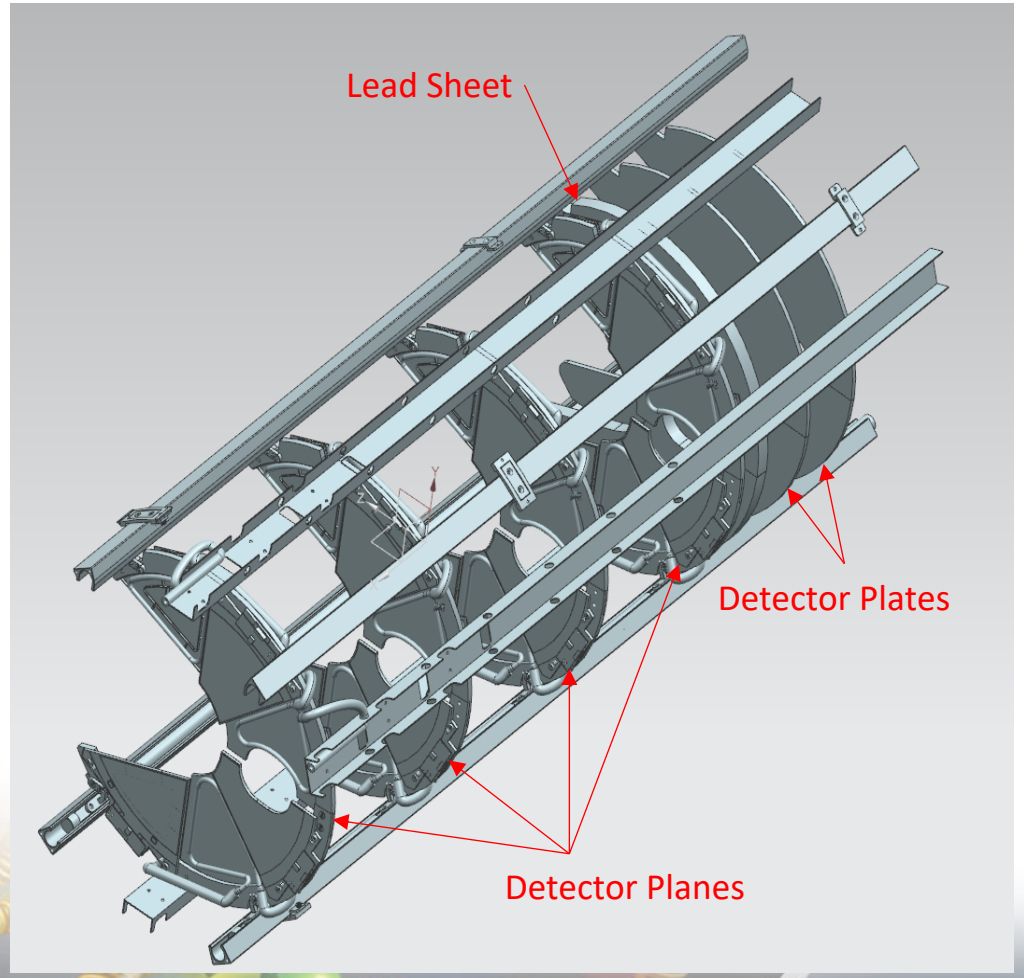


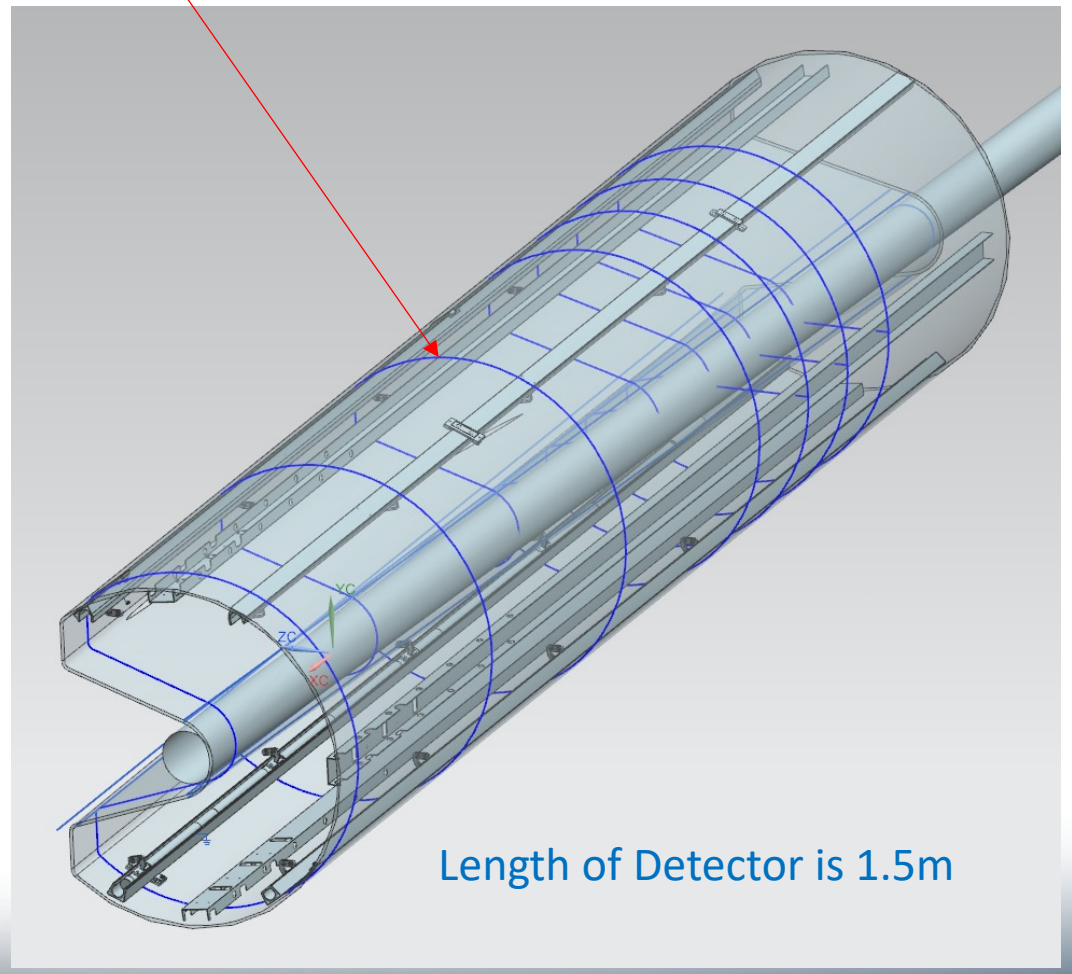

# B0 Detectors

(5.5 < $\theta$ < 20.0 mrad)

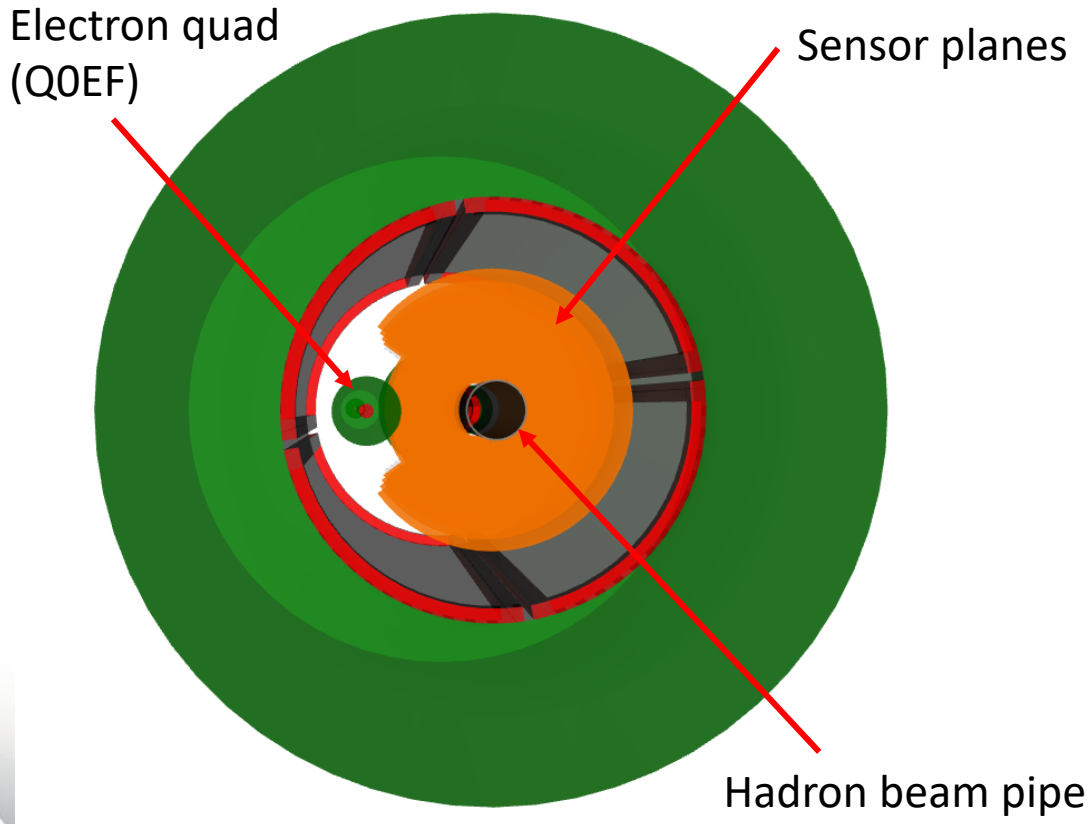


DD4HEP Simulation

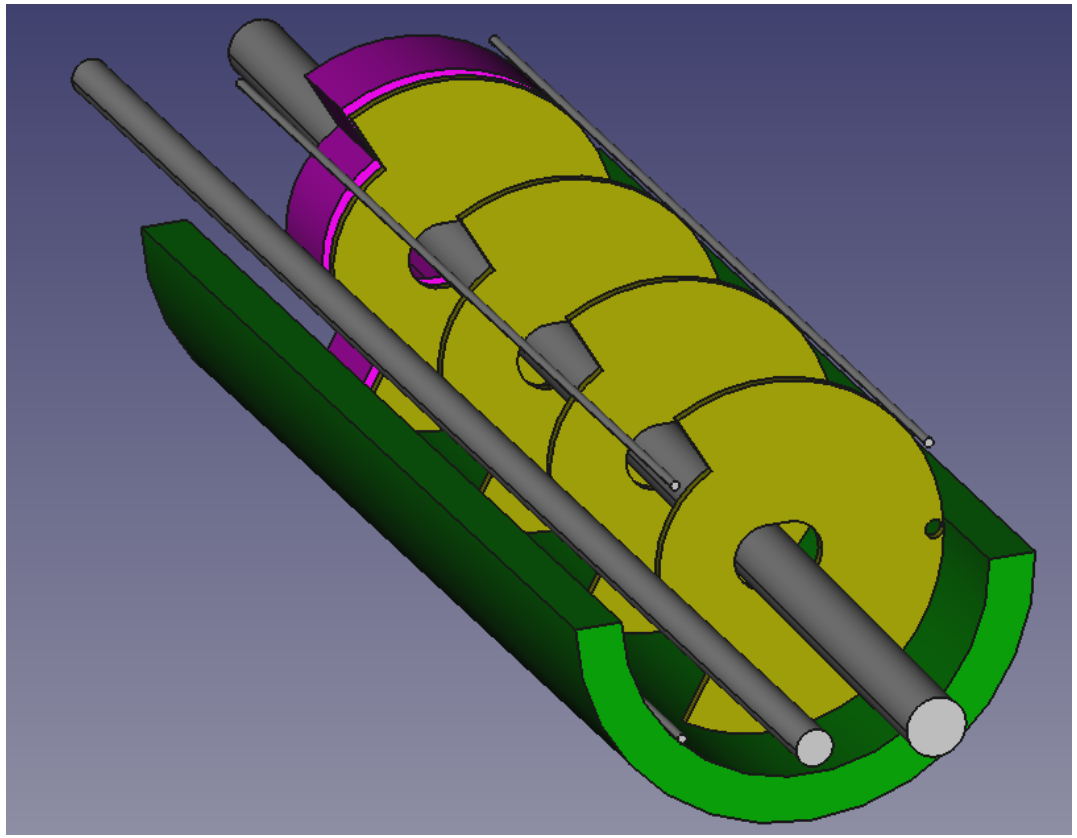

- **Technology:**
  - **Tracking: IT3 or ITS2 MAPS (3 layers) + AC-LGADs (1 layer)**
  - **PbWO4 EMCAL or silicon preshower, depending on available space in final B0pf magnet design (pending).**

# Roman Pots @ the EIC

**Full GEANT4 simulation.**

Protons
E = 275 GeV
0 < $\theta$ < 5 mrad

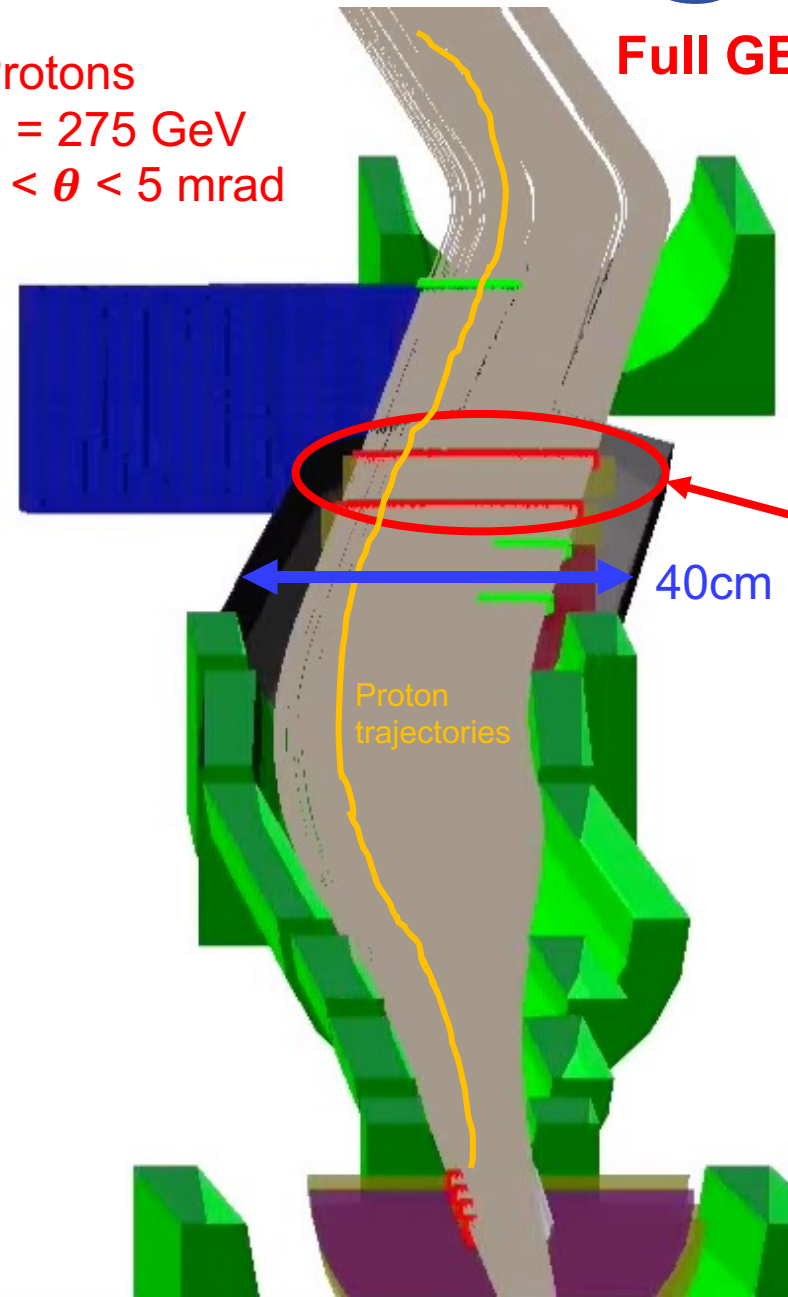


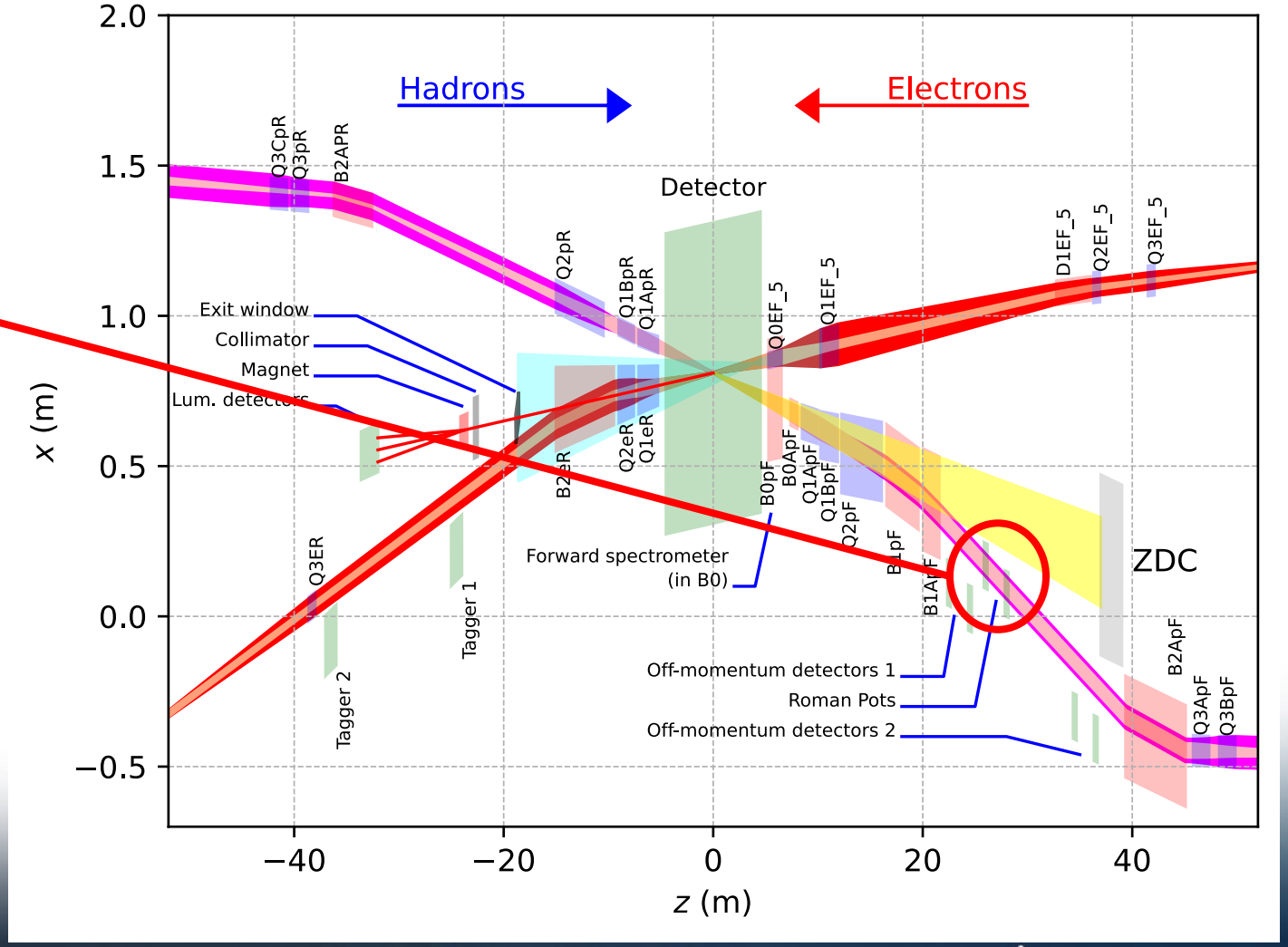

# Roman Pots and Off-Momentum Detectors

Credit: Ron Lassiter

Initial step file inspired by STAR

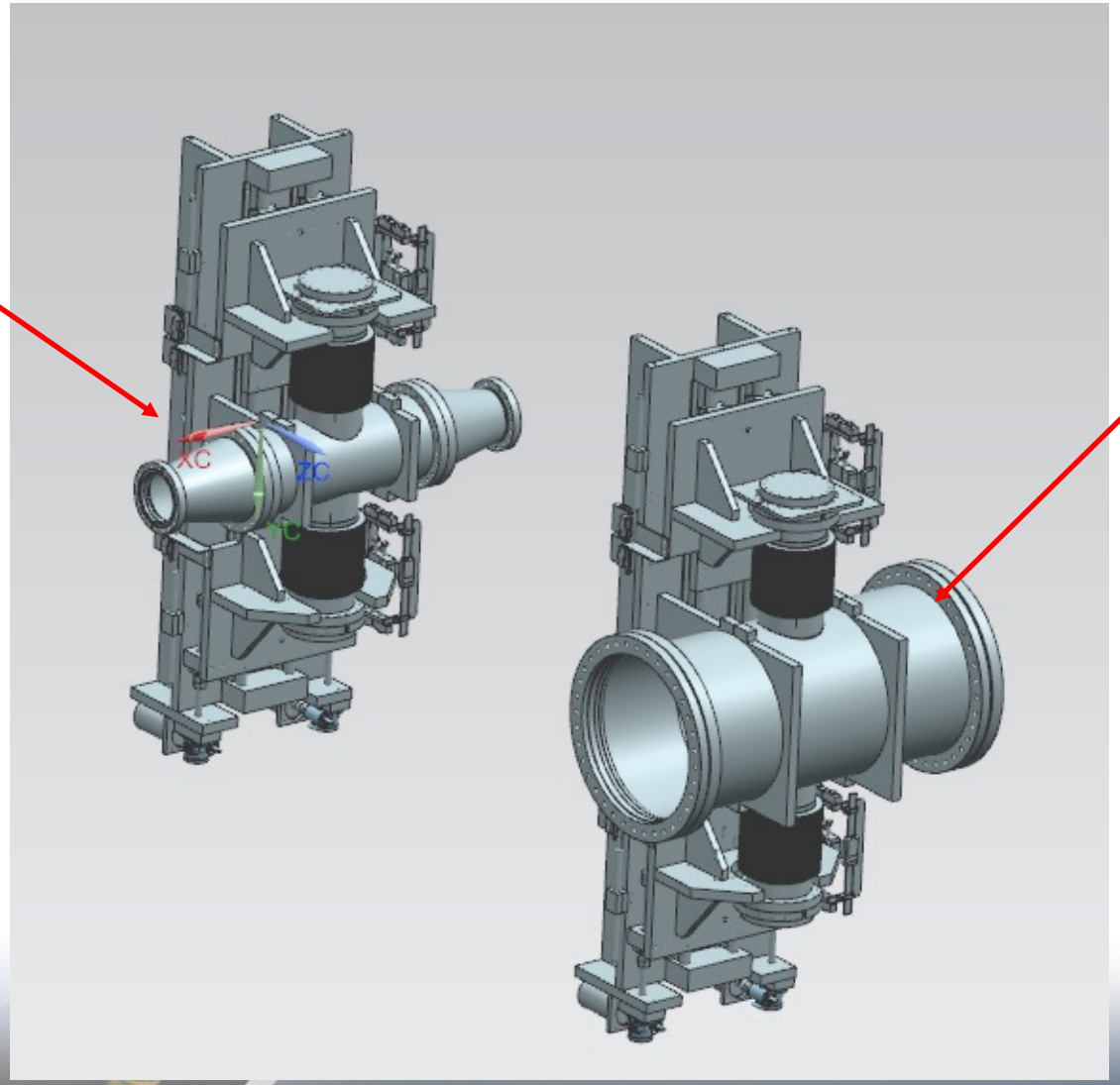


Updated model in NX with different beamtube size

# Roman Pots in CAD

Credit: Ron Lassiter

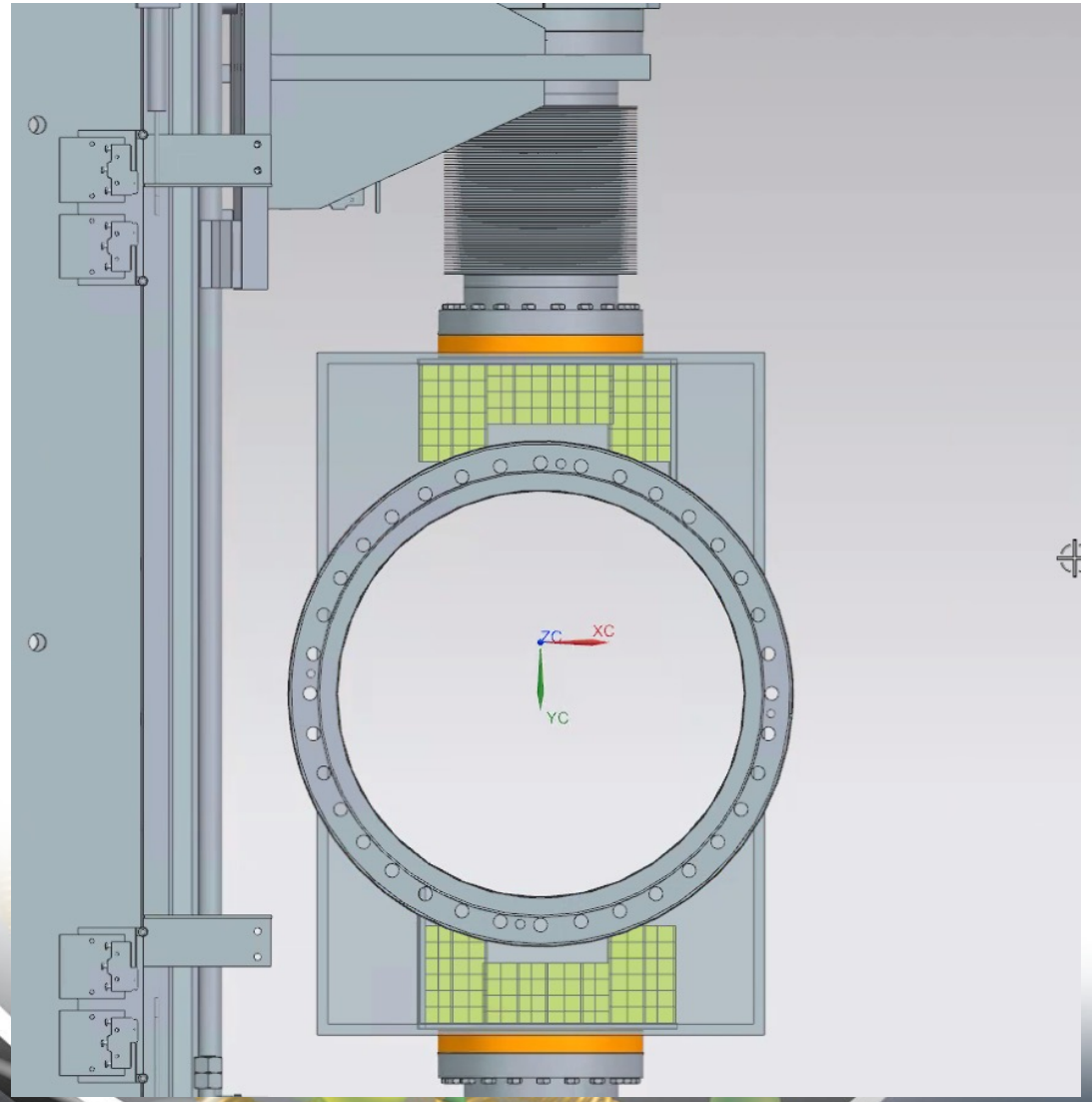


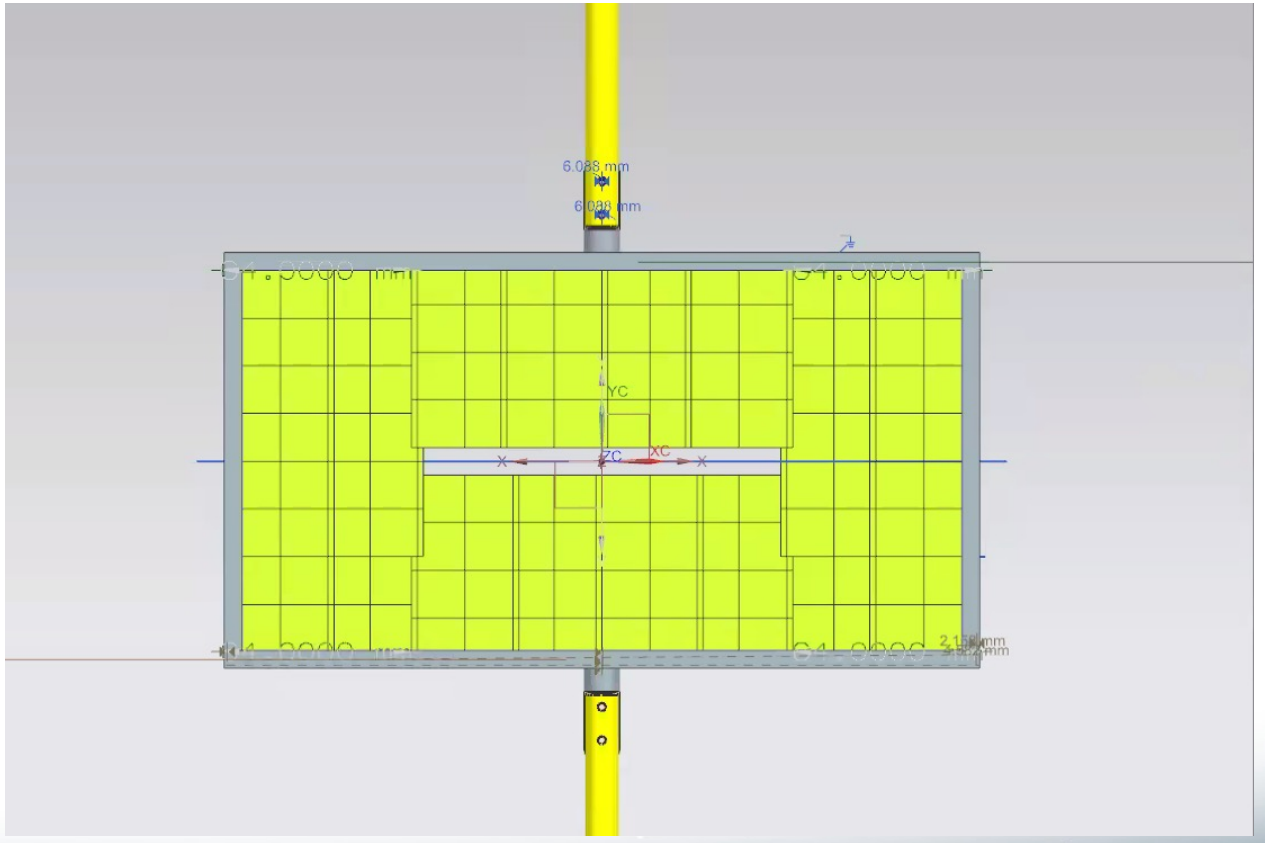

# Off-Momentum Detectors

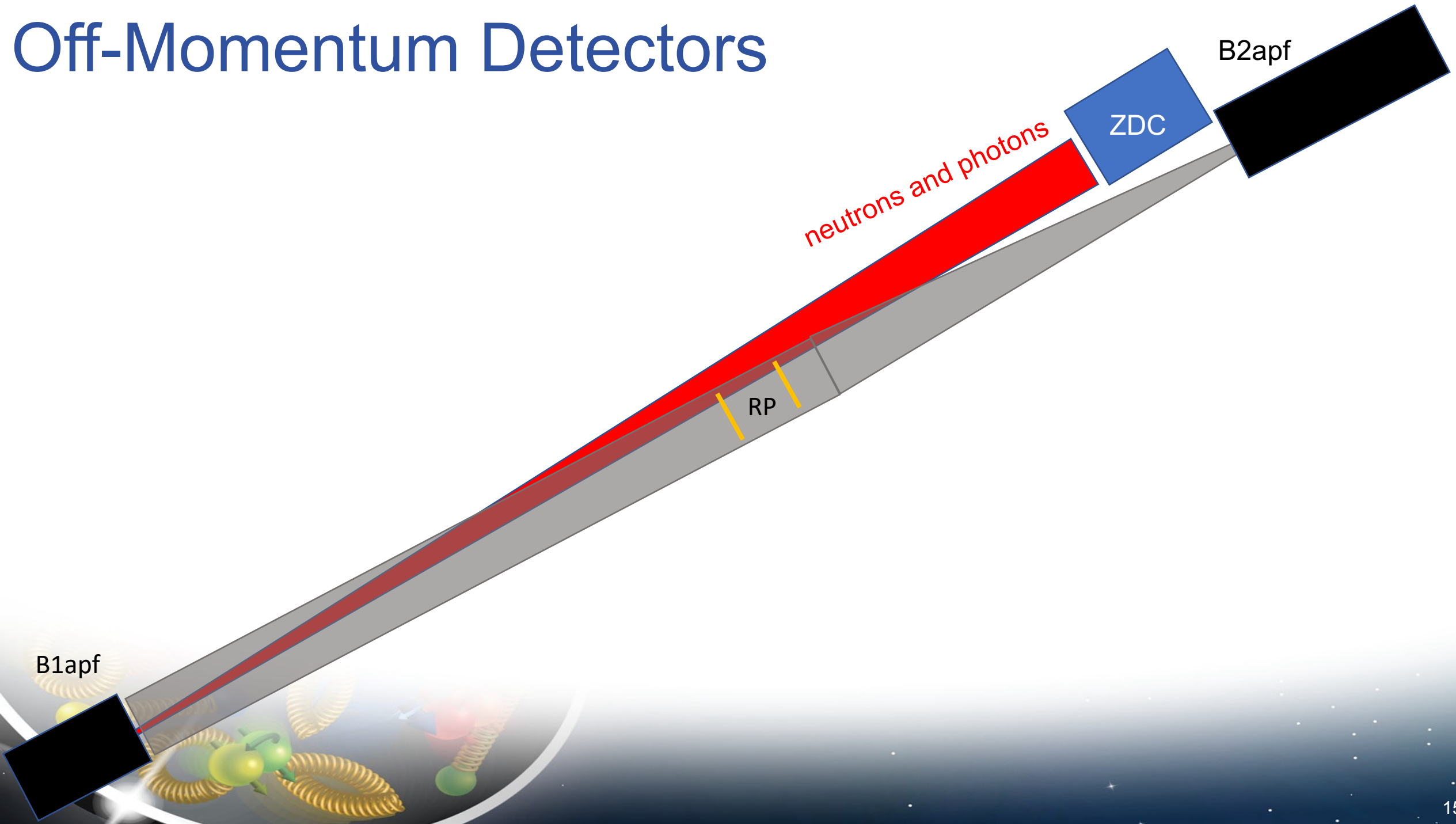

# Off-Momentum Detectors

- Off-momentum protons → smaller magnetic rigidity → **greater bending in dipole fields.**
- **Important for any measurement with nuclear breakup!**

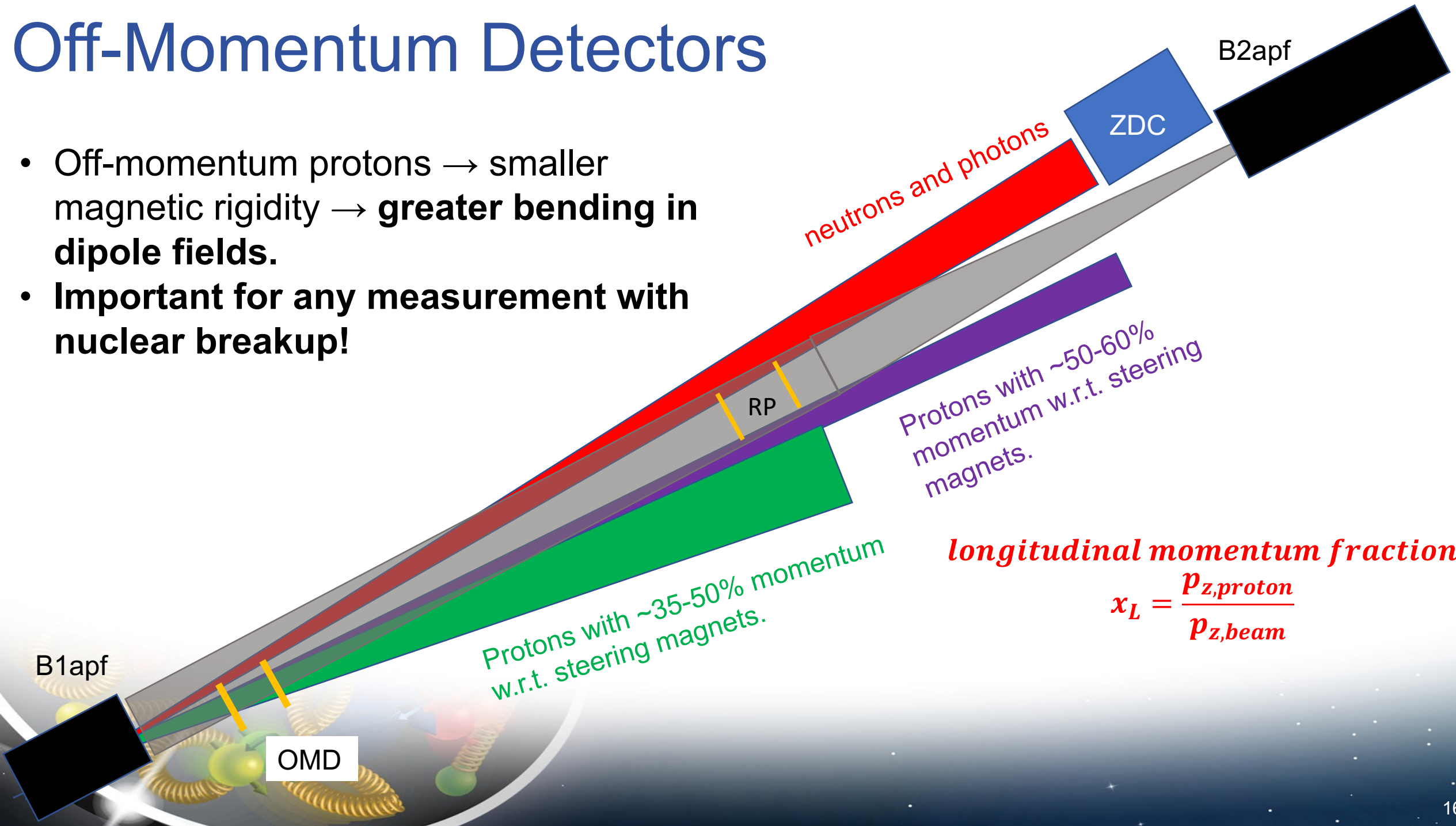


$$\textit{longitudinal momentum fraction}$$

$$x_L = \frac{p_{z,proton}}{p_{z,beam}}$$

# Off-Momentum Detectors

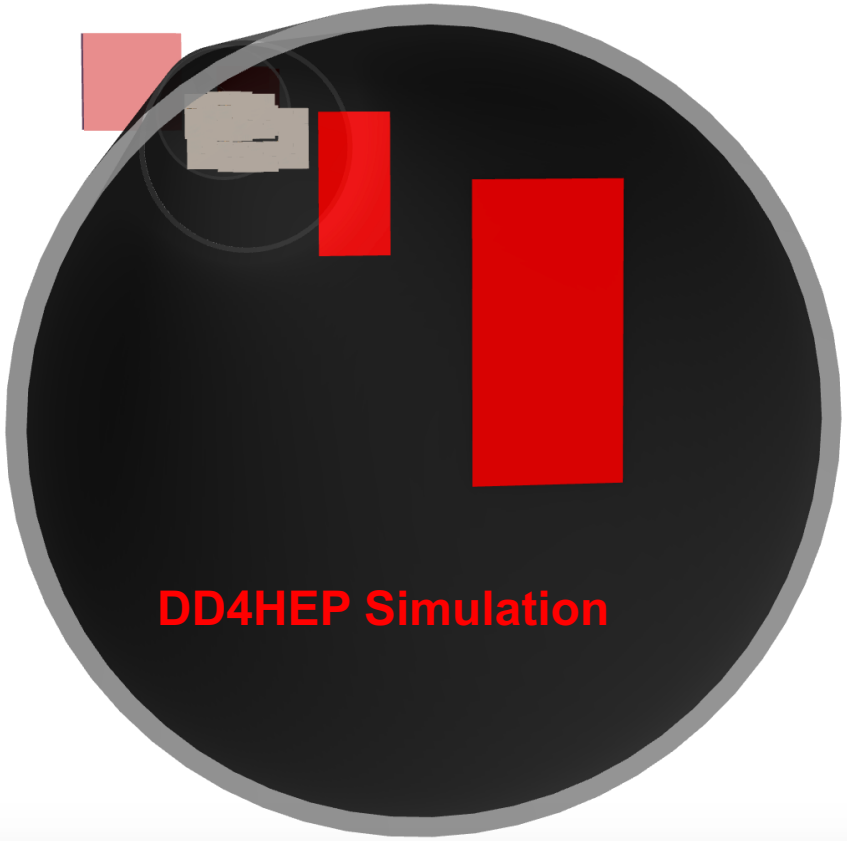


- **Same technology as for the Roman Pots.**
- **Need to also study use of OMD on other side for tagging negative pions.**

Protons
123.75 < E < 151.25 GeV
(45% < xL < 55%)
0 < $\theta$ < 5 mrad

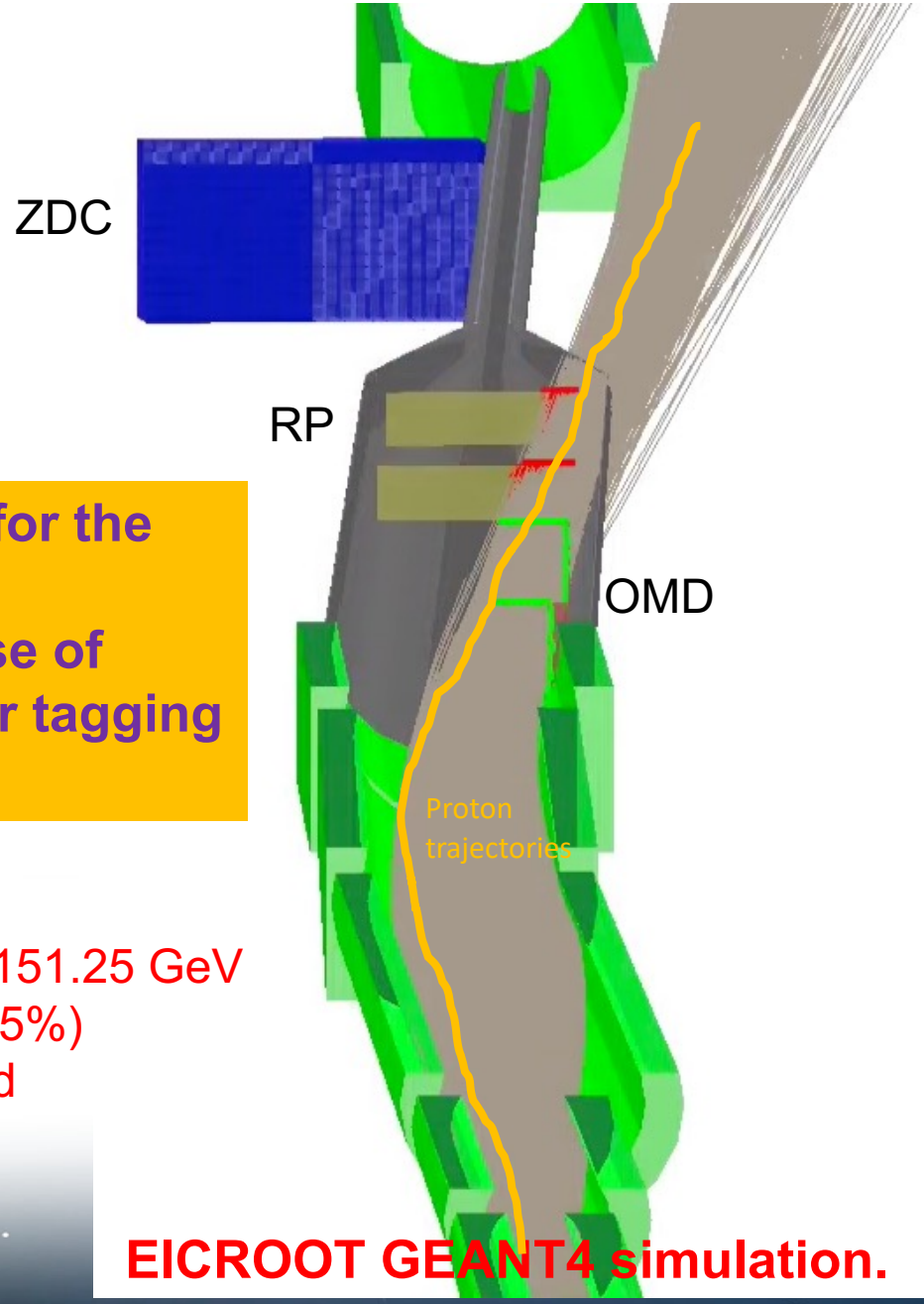


**EICROOT GEANT4 simulation.**

Off-momentum detectors implemented as horizontal ”Roman Pots” style sensors.

# Preliminary CAD drawings of RP and OMD Supports and Magnet Cryostats

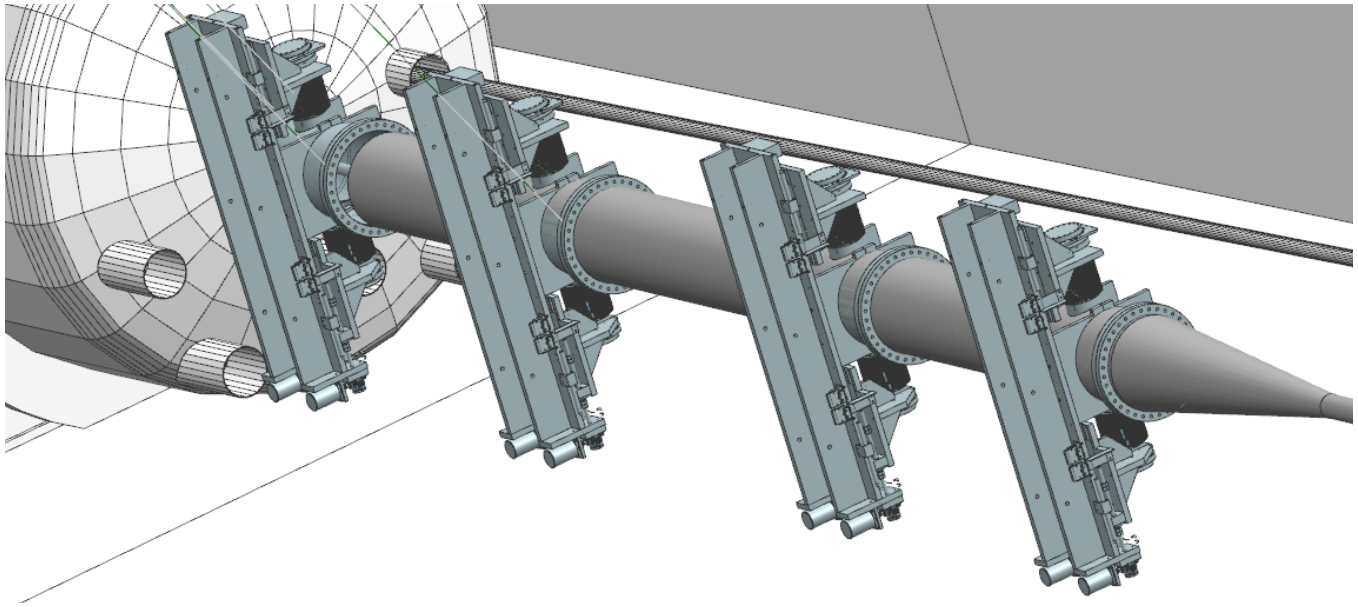

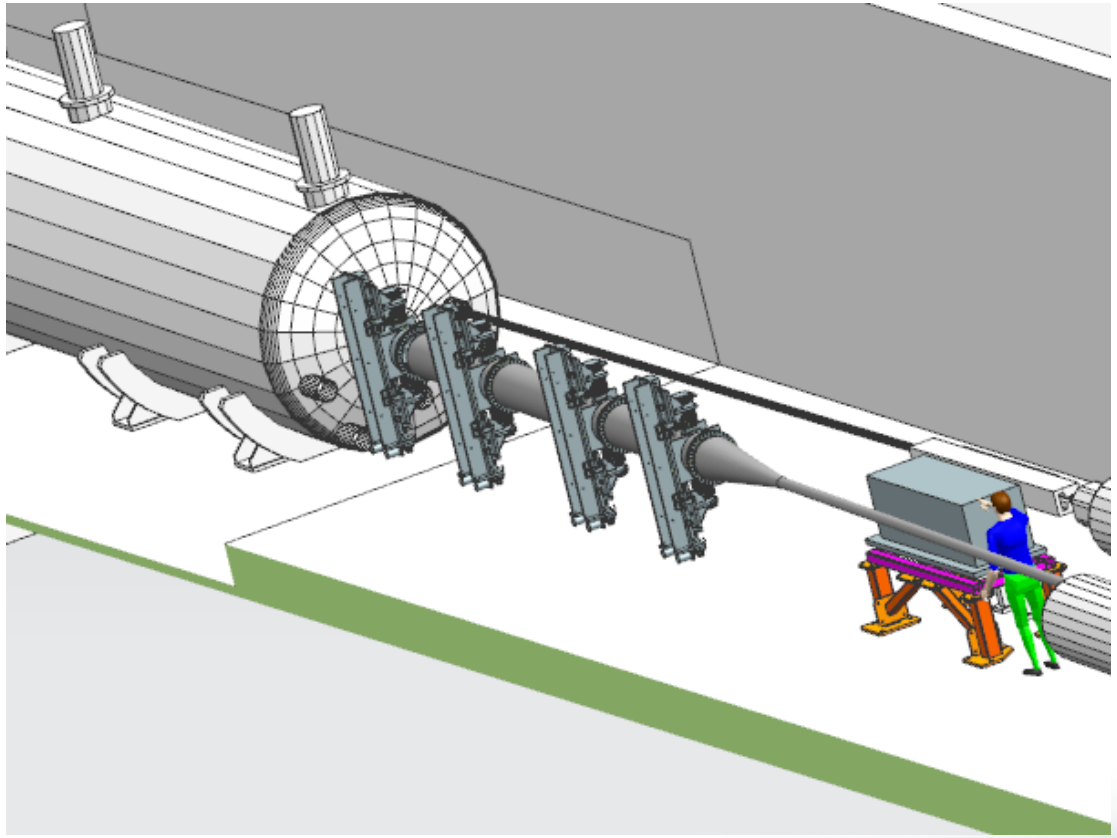
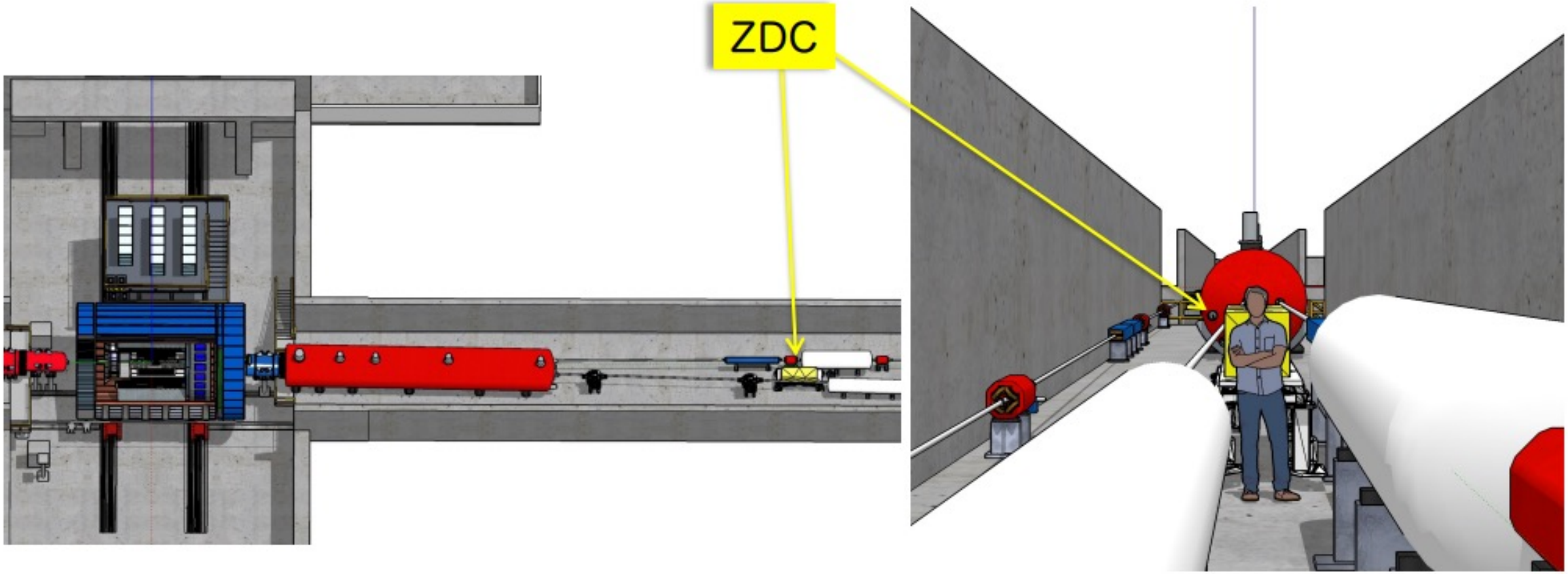
# Zero-Degree Calorimeter