DRG. NO.	SHEET 1 OF 1
A1	318-10087

CONFORMS TO BS 8888 THIRD ANGLE PROJECTION

*ITEMS 4, 5 AND 7 SUPPLIED BY OTHERS

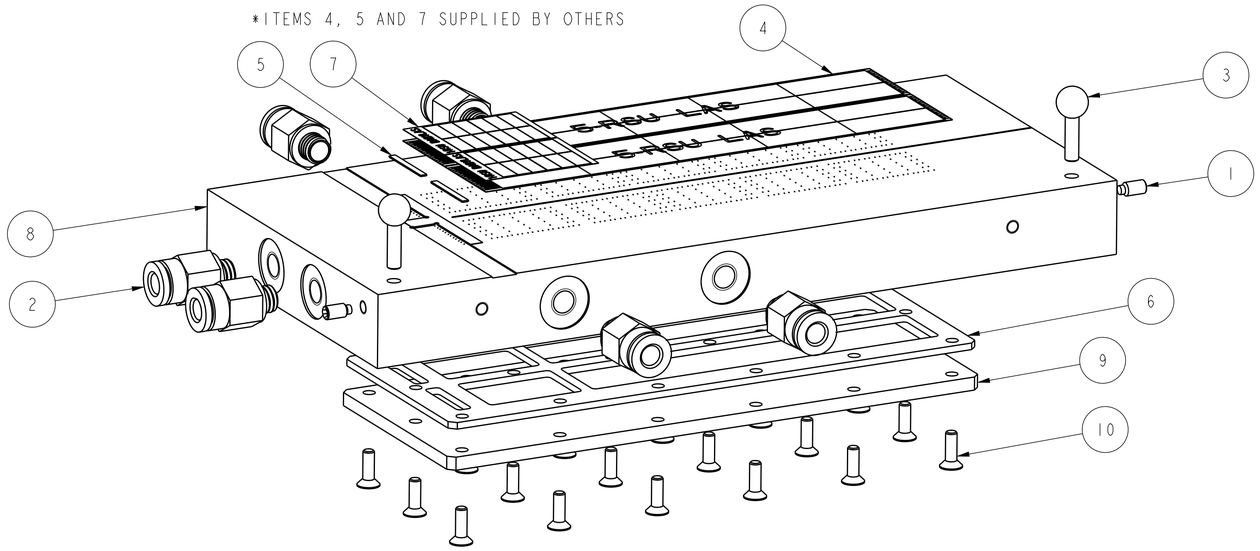

REF	DRG No.	DESCRIPTION	QTY	REMARKS
1	001-17044	M3 x 6 LONG SET SCREW - NYLON TIPPED	2	
2	001-17045	M6 PNEUMATIC CONNECTOR SMC-KQ2H06-M6A	6	
3	001-17070	TOOLING BALL ON STEM	2	
4	318-10074	5-RSU LAS (LARGE AREA SENSOR) - CHIP	2	
5	318-10084	ANC ASIC (15x1.5x0.3) Mk2	2	
6	318-10088	LAS VACUUM JIG SEALING GASKET	1	
7	318-10090	1-RSU BABYLAS - CHIP	2	
8	318-10099	TWIN SENSOR ALIGNMENT VACUUM JIG PLATE	1	
9	318-10106	LAS VACUUM JIG CAPPING PLATE	1	
10	HCS-025-008	M2,5 x 8 LG HEX CSK HD SCREW	18	

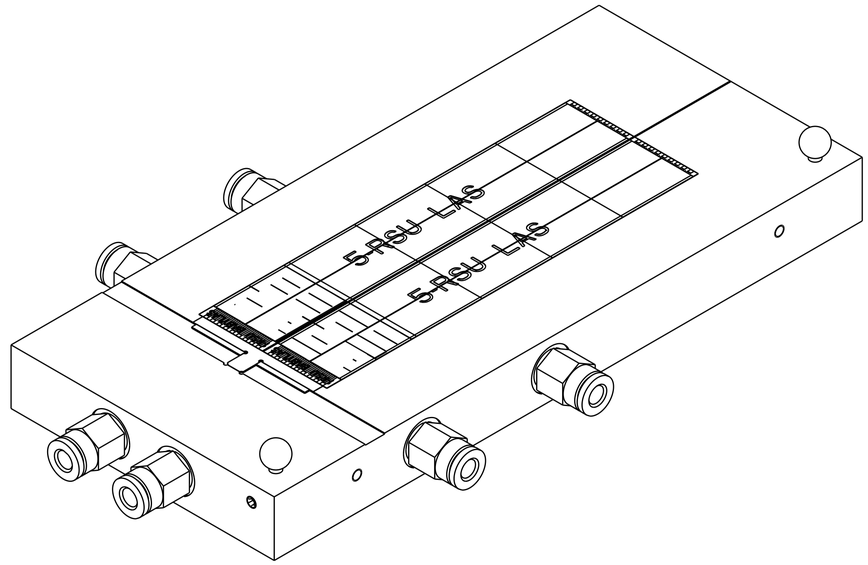

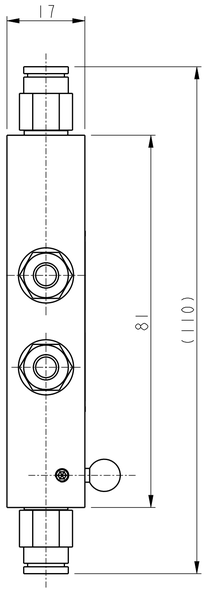

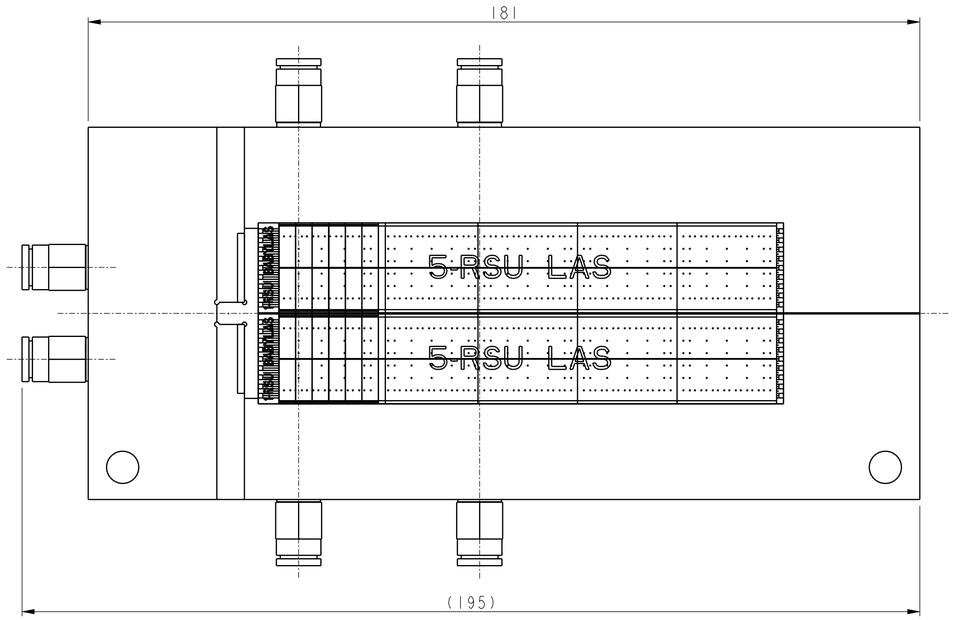

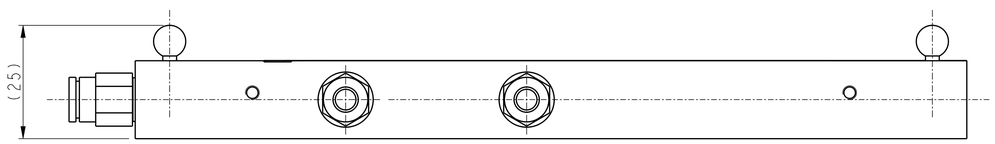

RELEASE STATUS	Approved
WELDING SPEC.	--------
MATERIAL SPEC.	--------
MATERIAL	--------

TOLERANCES UNLESS OTHERWISE STATED

GENERAL TOLERANCES TO BS EN 22768 PT1 & 2 --

GENERAL SURFACE FINISH

ALL DIMENSIONS IN mm UNLESS OTHERWISE STATED

TOLERANCING ISO 8015

DRN.	KPD	SCIENCE AND TECHNOLOGY FACILITIES COUNCIL
DATE.	03/09/25	DARESBURY LABORATORY CHESHIRE
CKD.	MTK	TITLE
DATE.	08/09/25	LAS VACUUM JIG ASSEMBLY ePIC SVT JIG PROTOTYPE
APPD.	MTK	
DATE.	08/09/25	

DRG. NO.	SHEET 1 OF 1	ISSUE
A1	318-10087	A

PTC CAD PART NO. 318-10087

USED ON 318-10104

THIS DRAWING IS THE PROPERTY OF STFC AND MAY NOT BE COPIED OR USED FOR ANY PURPOSE OTHER THAN THAT FOR WHICH IT IS SUPPLIED WITHOUT THE EXPRESS WRITTEN AUTHORITY OF STFC.

THE ENVELOPE REQUIREMENT Ⓔ APPLIES TO ALL FEATURES OF SIZE UNLESS OTHERWISE STATED. SEE ISO 14405-1 FOR DETAILS.

A	FIRST ISSUE

ORIGINAL FRAME SIZE 804mm X 557mm