REVISION HISTORY				
ZONE	REV	DESCRIPTION	DATE	APPROVED
	E	CHANGED MATERIAL SPECIFICATION CHANGED FLATNESS SPECIFICATION	6/15/2018	Ruggiero
	F	3.10 WAS 3.00 / 8.67 WAS 9.05	9/6/2018	richadmin

Notes:
1. Material: REFER TO CURRENT REVISION OF DOCUMENT SP-DS-OHC-001 SECTION 3.1 (E)
   Coating: REFER TO CURRENT REVISION OF DOCUMENT SP-DS-OHC-001 SECTION 3.2
2. ALL DIMENSIONS ARE IN mm
3. FLATNESS TOLERANCE IS FOR UNRESTRAINED STATE. RESTRAINING TILE FLAT AFTER MACHINING SHOULD NOT EFFECT TILE EFFECIENCY OR CAUSE ANY DAMAGE.

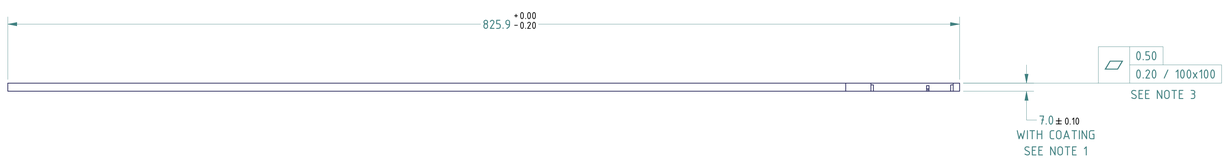

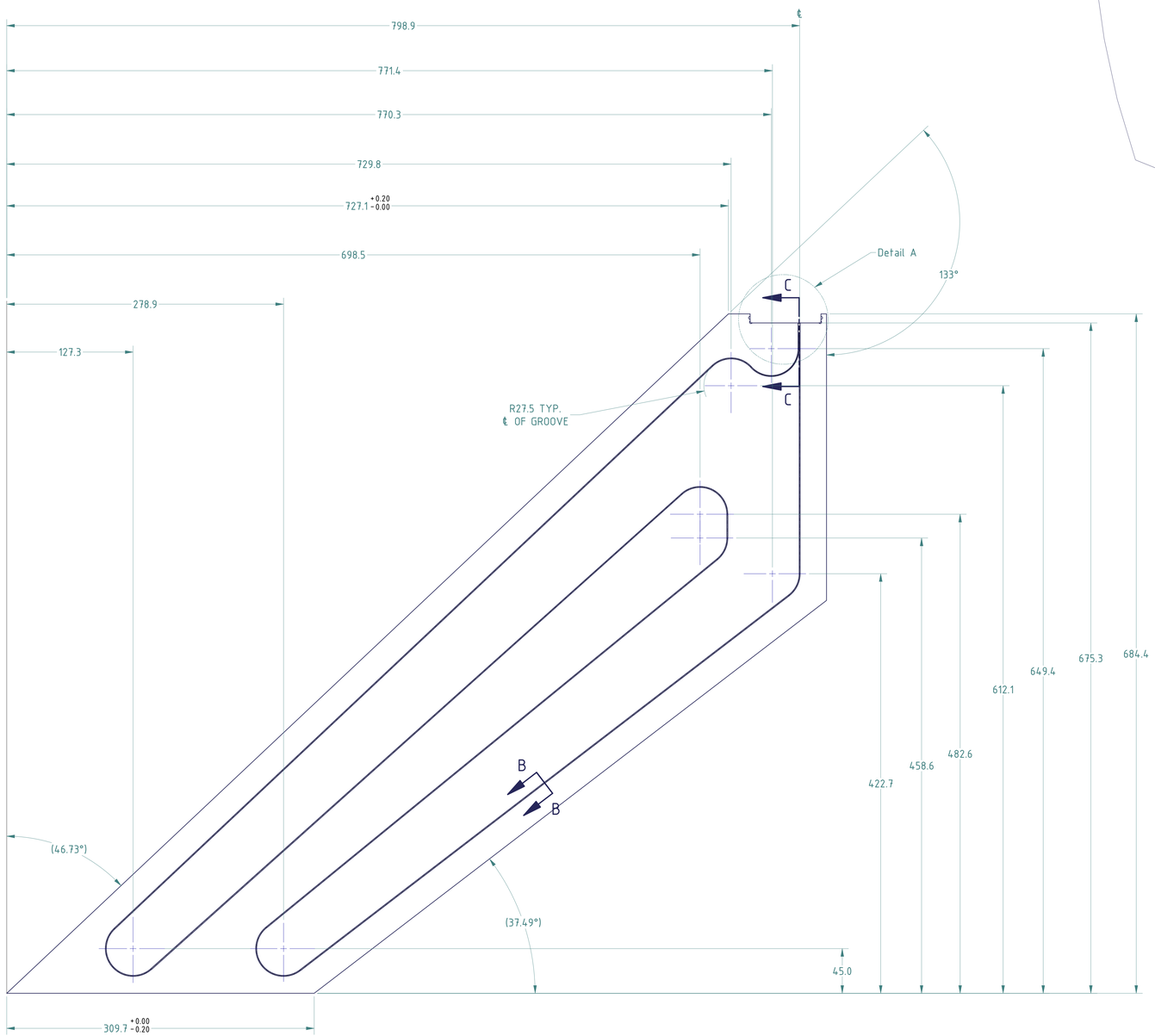

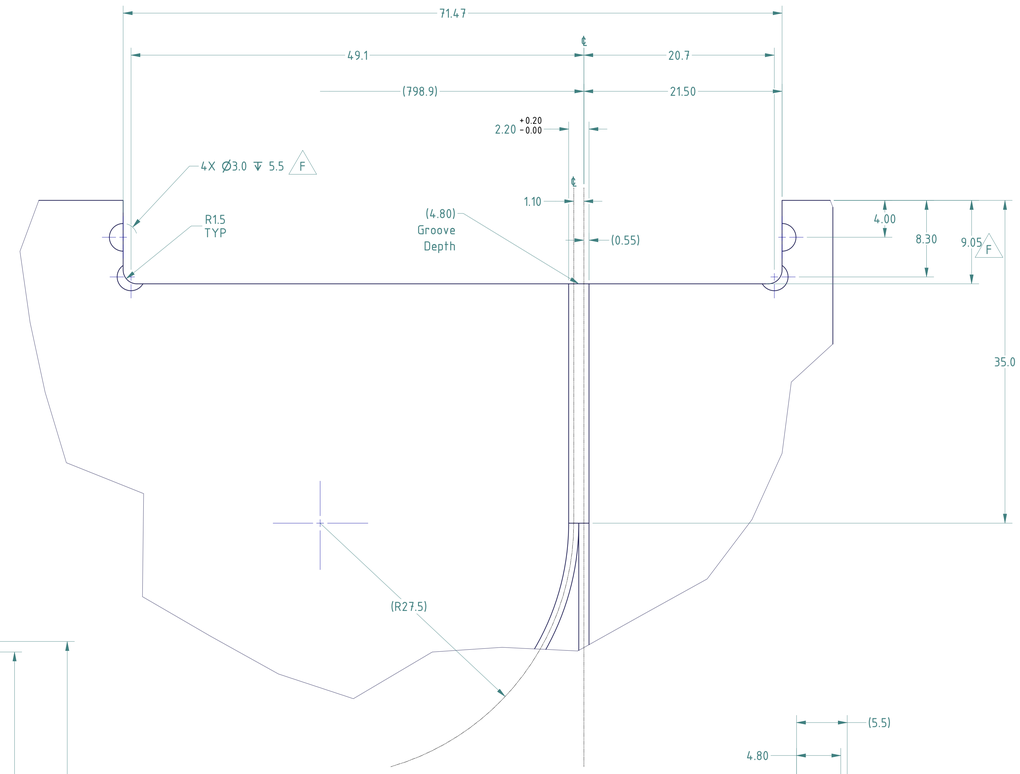

DETAIL A
SCALE 4 : 1

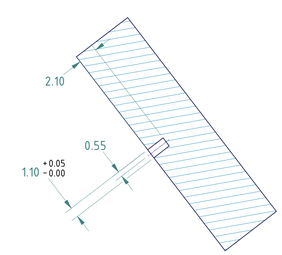

SECTION B-B
SCALE 4 : 1
GROOVE SIZE

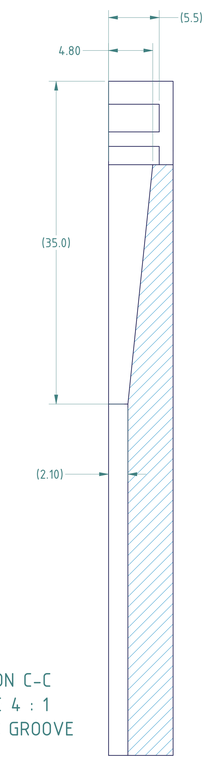

SECTION C-C
SCALE 4 : 1
TAPERED GROOVE

THIRD ANGLE PROJECTION

INTERPRET IN GENERAL ACCORDANCE WITH ASME Y14.5-2009
UNLESS OTHERWISE SPECIFIED
ALL DIMENSIONS ARE IN INCHES [mm]
DECIMAL TOLERANCES
X.X ± 0.38
X.XX ± 0.127
X.XXX ± 0.05
ANGLES ± 0.5
FINISH: 32
BREAK EDGES:
MAX. 0.38 MIN. 0.127

OUTSTANDING ECN NUMBERS

DRAWN BY:	K. RUGGIERO	6/15/2018
CHECKED BY:	J. PINTER	6/15/2018
ENGINEER APPROVAL:	J. PALLO	6/15/2018
SUPERVISOR APPROVAL:	J. LYNCH	6/15/2018
DESIGN APPROVAL:	J. ALSTONE	6/15/2018
Q.A. APPROVAL:	J. GORTAKOWSKI	6/15/2018
SAFETY DRAWER:	J. FRANZ	6/15/2018

SPHENIX

BROOKHAVEN NATIONAL LABORATORY
BROOKHAVEN SCIENCE ASSOCIATES
UPTON, NY 11973

PROJECT: HCAL
DESCRIPTION: Outer HCAL Tile 12
SIZE: E
DRAWING NUMBER: 205-0100-0032
REV: E
Q.A. CATEGORY: A3 SCALE: 1 / 2 WEIGHT: 3 lbmass SHEET: 1 OF 1