# Color charge correlations in the proton from its light-front wave function

Adrian Dumitru
Baruch College & CUNY Grad School

Many open questions: mass of proton, confinement, spin, small-x gluons, <u>correlations</u>

wikipedia

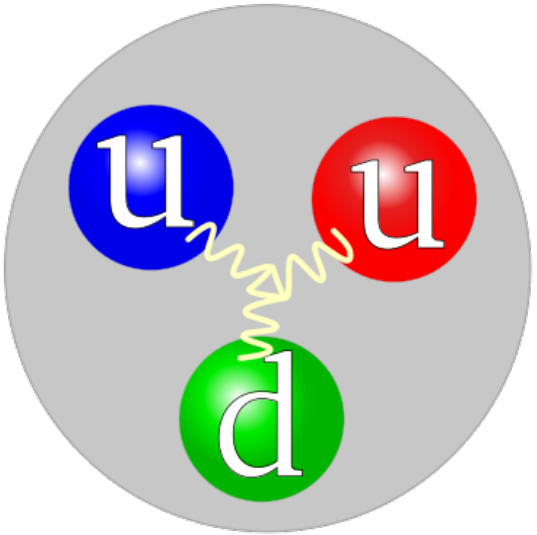


Dumitru, Miller, Venugopalan: arXiv:1808.02501

What's that ?

# Light front wave function of the proton

valence quark state, x ~ 0.1

$$
\begin{aligned}
|P\rangle &= \frac{1}{\sqrt{6}} \int \frac{dx_1 dx_2 dx_3}{\sqrt{x_1 x_2 x_3}} \delta(1 - x_1 - x_2 - x_3) \int \frac{d^2k_1 d^2k_2 d^2k_3}{(16\pi^3)^3} 16\pi^3 \delta(\vec{k}_1 + \vec{k}_2 + \vec{k}_3) \\
&\times \sum_{\lambda_1,\lambda_2,\lambda_3} \psi_3(p_1, \lambda_1, p_2, \lambda_2, p_3, \lambda_3) \sum_{i_1,i_2,i_3} \epsilon_{i_1 i_2 i_3} |p_1, i_1, \lambda_1;\, p_2, i_2, \lambda_2;\, p_3, i_3, \lambda_3\rangle
\end{aligned}
$$

$$
|p, i, \lambda\rangle = b^\dagger_{p,i,\lambda}|0\rangle \quad , \quad b_{k,j,\sigma}|p, i, \lambda\rangle = \delta^{ji}\delta^{\sigma\lambda}\, k^+ \delta(k^+ - p^+)\, 16\pi^3 \delta(\vec{k} - \vec{p})|0\rangle
$$

$$
\langle k, j, \sigma|p, i, \lambda\rangle = \langle 0|b_{k,j,\sigma}\, b^\dagger_{p,i,\lambda}|0\rangle = \langle 0|\{b_{k,j,\sigma}, b^\dagger_{p,i,\lambda}\}|0\rangle = \delta^{ji,\sigma\lambda}_{kp}
$$

$$
\langle k, j, \sigma|b^\dagger_{q,m,\sigma'} b_{r,n,\lambda'}|p, i, \lambda\rangle = \delta^{jm,\sigma\sigma'}_{kq}\, \delta^{ni,\lambda\lambda'}_{rp}
$$

b, $b^\dagger$ defined from free field operator at L.C. time $x^+ = 0$

# Color charge operator

$$\psi_{i,f}(r) = \int \frac{dp^+ d^2p}{16\pi^3 p^+} \sum_s b_{p,i,s,f}\, u^s(p)\, e^{-ip\cdot r} = \int \frac{dx_p d^2p}{16\pi^3 x_p} \sum_s b_{p,i,s,f}\, u^s(p)\, e^{-ip\cdot r}$$

$$r = (x^+ = 0, x^-, \vec{x}_T)$$

$$\begin{aligned} \rho^a(r) &\equiv j^{+a} = \overline{\psi}_{i,f}\gamma^+\psi_{j,f}\,(t^a)_{ij} \\ &= 2P^+ \sum_\lambda \int \frac{dx_q d^2q}{16\pi^3\sqrt{x_q}}\, b^\dagger_{q,i,\lambda} e^{iq\cdot r} \int \frac{dx_p d^2p}{16\pi^3\sqrt{x_p}}\, b_{p,j,\lambda'} e^{-ip\cdot r}\,(t^a)_{ij} \end{aligned}$$

$$\rho^a(x_k, \vec{k}) = \sum_\lambda \int \frac{dx_q}{\sqrt{x_q(x_q + x_k)}} \int \frac{d^2q}{16\pi^3}\, b^\dagger_{q,i,\lambda}\, b_{k+q,j,\lambda}\,(t^a)_{ij}$$

$$\boxed{\rho^a(x_k \sim 0, \vec{k}) = \sum_\lambda \int \frac{dx_q}{x_q} \int \frac{d^2q}{16\pi^3}\, b^\dagger_{x_q,\vec{q},i,\lambda}\, b_{x_q,\vec{k}+\vec{q},j,\lambda}\,(t^a)_{ij}}$$

# Color charge correlators and form factors

note: $\langle \cdots \rangle_{K_T} \equiv \left\langle P^+, \vec{K}_T | \cdots | P^+, \vec{0}_T \right\rangle / \left\langle P^+, \vec{K}_T | P^+, \vec{0}_T \right\rangle$

$$\begin{aligned}
\langle\, \rho^a(\vec{q})\, \rho^b(\vec{k})\, \rangle_{K_\perp} &= (\mathrm{tr}\ t^a t^b) \sum_{\lambda_i} \int [dx_i][d^2p_i] \\
&\quad \left\{ \psi_3^*(k_1, k_2, k_3) - \psi_3^*(\bar{k}_1, \bar{k}_2, \bar{k}_3) \right\} \psi_3(p_1, p_2, p_3) \\
&\equiv \frac{1}{2}\, \delta^{ab}\, \mathcal{G}(\vec{k}, \vec{K}_T) = \frac{1}{2}\, \delta^{ab} \left[ \mathcal{G}_1(\vec{K}_T) - \mathcal{G}_2(\vec{k}, \vec{K}_T) \right]
\end{aligned}$$

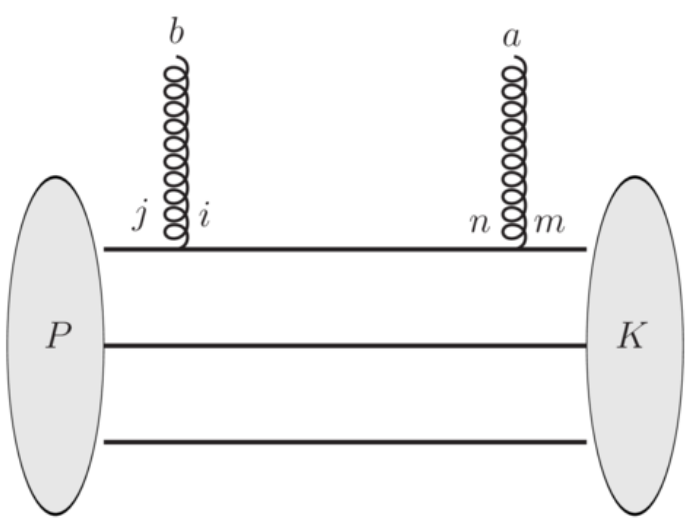


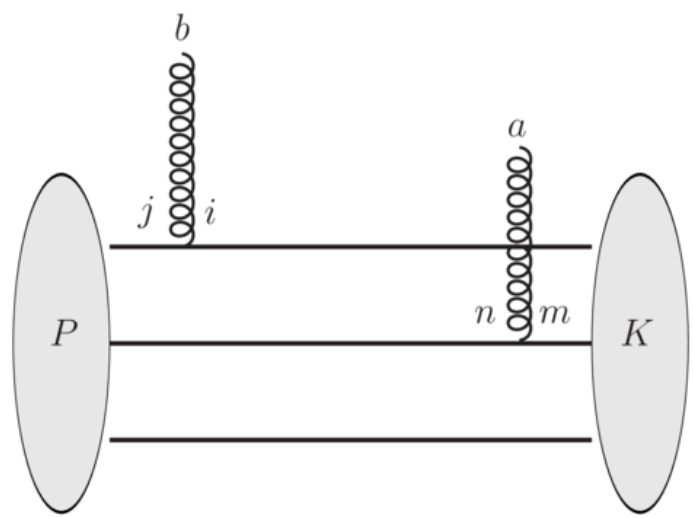

$$
\begin{aligned}
[dx_i] &= dx_1 dx_2 dx_3\, \delta(1 - x_1 - x_2 - x_3) \\
\left[d^2 p_i\right] &= \frac{d^2\vec{p}_1 d^2\vec{p}_2 d^2\vec{p}_3}{(16\pi^3)^2}\, \delta(\vec{p}_1 + \vec{p}_2 + \vec{p}_3) \\
k_i^+ &= \bar{k}_i^+ = x_i P^+ \\
\vec{k}_1 &= \vec{p}_1 + (1 - x_1)\vec{K}_\perp \\
\vec{k}_2 &= \vec{p}_2 - x_2 \vec{K}_\perp \\
\vec{k}_3 &= \vec{\bar{k}}_3 = \vec{p}_3 - x_3 \vec{K}_\perp
\end{aligned}
$$

$$
\begin{aligned}
\vec{\bar{k}}_1 &= \vec{p}_1 - \vec{q} - x_1 \vec{K}_\perp \\
\vec{\bar{k}}_2 &= \vec{p}_2 - \vec{k} - x_2 \vec{K}_\perp \\
\lambda_i' &= \lambda_i
\end{aligned}
$$

$<\rho^3>$ : one-body diagrams

$$\left\langle \rho^a(\vec{q}_1)\,\rho^b(\vec{q}_2)\,\rho^c(\vec{q}_3)\right\rangle_{K_\perp} = (\mathrm{tr}\ t^a t^b t^c)\sum_{\lambda_i}\int [dx_i][d^2p_i]$$

$$\psi_3^*(k_1,k_2,k_3)\,\psi_3(p_1,p_2,p_3)$$

$$\vec{k}_i = \vec{p}_i + (\delta_{i1} - x_i)\vec{K}_T$$

two-body diagrams

$$\left\langle \rho^a(\vec{q}_1)\,\rho^b(\vec{q}_2)\,\rho^c(\vec{q}_3)\right\rangle_{K_\perp} = -(\mathrm{tr}\ t^a t^b t^c)\sum_{\lambda_i}\int [dx_i][d^2p_i]$$

$$\psi_3^*(k_1,k_2,k_3)\,\psi_3(p_1,p_2,p_3)$$

$$\vec{k}_1 = \vec{p}_1 + \vec{q}_1 + (1-x_1)\vec{K}_T \qquad \vec{k}_2 = \vec{p}_2 - \vec{q}_1 - x_2\vec{K}_T$$

$$+\vec{q}_1 \leftrightarrow \vec{q}_2,\ \vec{q}_3$$

# three-body diagrams

$$\left\langle \rho^a(\vec{q}_1)\,\rho^b(\vec{q}_2)\,\rho^c(\vec{q}_3)\right\rangle_{K_\perp} = \frac{1}{2}\,d^{abc}\sum_{\lambda_i}\int[dx_i][d^2p_i]$$
$$\psi_3^*(k_1,k_2,k_3)\,\psi_3(p_1,p_2,p_3)$$

$$\vec{k}_1 = \vec{p}_1 - \vec{q}_1 - x_1\vec{K}_T \qquad \vec{k}_2 = \vec{p}_2 - \vec{q}_2 - x_2\vec{K}_T \qquad \vec{k}_3 = \vec{p}_3 - \vec{q}_3 - x_3\vec{K}_T$$

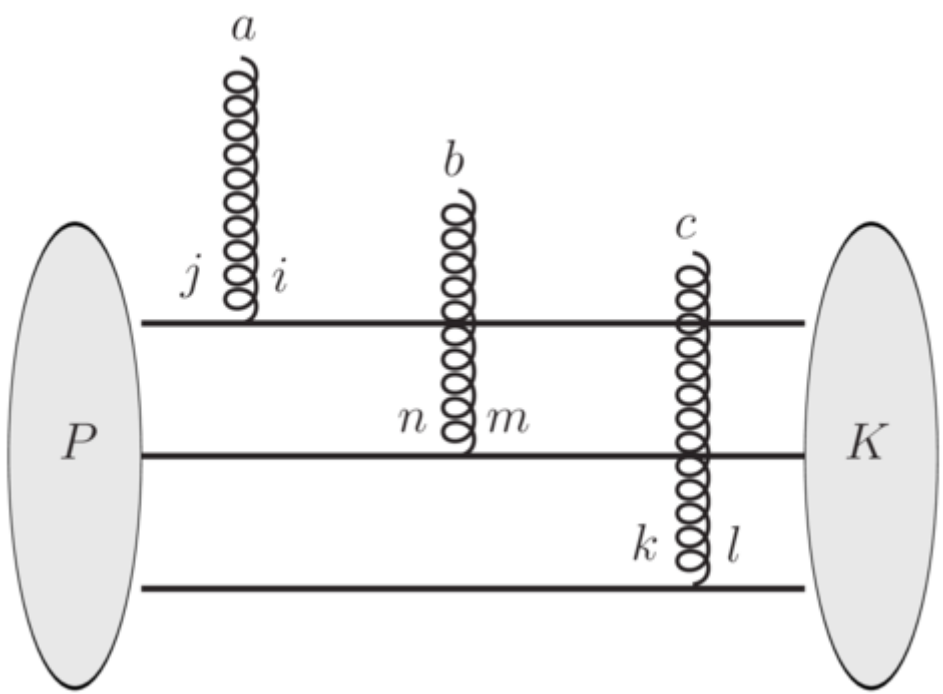

three gluon exchange form factor

$$\left\langle [\rho^a(\vec{q}_1)\rho^b(\vec{q}_2)\rho^c(\vec{q}_3)]_{\rm sym} \right\rangle_{K_\perp} \quad \equiv \quad \frac{d^{abc}}{N_c}\, \mathcal{G}_O(\vec{q}_1, \vec{q}_2, \vec{q}_3; \vec{K}_\perp)$$

* In principle, along the same lines one can compute correlators of higher rank to relate them to the proton L.F. wave function

* Effective action S[ρ] (like in MV model) is not needed
  $\longrightarrow$ compute color charge correlators explicitly

# McLerran – Venugopalan model for a large nucleus

$$S_{\mathrm{MV}}[\rho] \quad = \quad \int d^2x \left\{ \frac{\rho^a(x_\perp)\,\rho^a(x_\perp)}{2\mu^2} + \cdots \right\} \qquad , \quad \mu^2 \sim A^{1/3}$$

McLerran, Venugopalan: Phys.Rev. D49 (1994) 2233; *ibid* p. 3352

Hence

$$\left\langle \rho^a \rho^b \right\rangle_{\vec{K}_T=0} \sim \delta^{ab}\,\mu^2$$

$$\left\langle \rho^a \rho^b \rho^c \rho^d \right\rangle = \left\langle \rho^a \rho^b \right\rangle \left\langle \rho^c \rho^d \right\rangle + \left\langle \rho^a \rho^c \right\rangle \left\langle \rho^b \rho^d \right\rangle + \left\langle \rho^a \rho^d \right\rangle \left\langle \rho^b \rho^c \right\rangle$$

etc.

Notes:

- in our approach, $\mu^2$ is not a constant (e.g. color charge neutrality over large distances)
- correlations not Gaussian
- may provide better initial conditions for small-x evolution (proton, $x_0 \sim 0.1$)
- non-zero momentum transfer, $\vec{K}_T \neq 0$
- paradigm shift: instead of effective action $S[\rho]$
  $\longrightarrow$ compute color charge correlators explicitly

- color charge form factors could be measured on the lattice or in exclusive DIS processes

# Exclusive J/Ψ and $\eta_c$ production in DIS

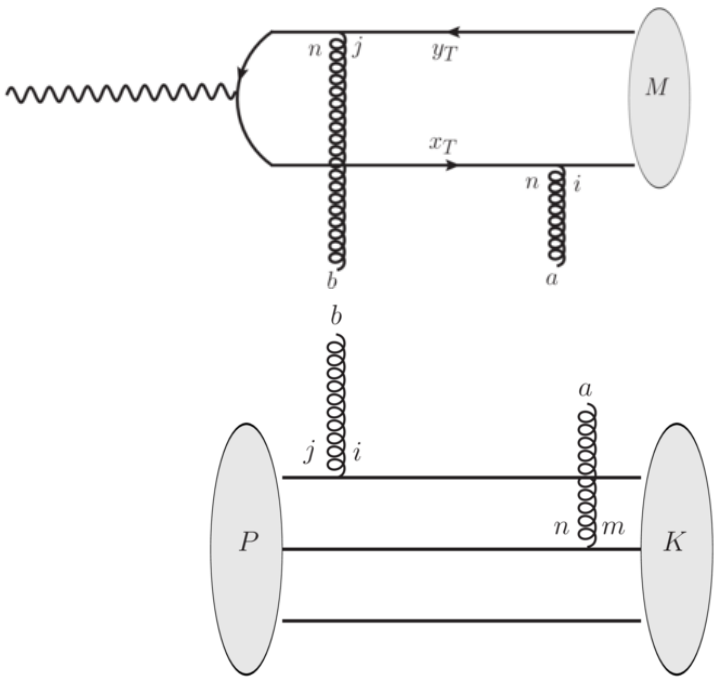


- recall x ~ 0.1
- high energy, leading in $1/P^+$ contribution only
- J/Ψ: $J^{PC} = 1^{--}$
  $\eta_c$: $J^{PC} = 0^{-+}$

$$\mathcal{A}^{\gamma^* p \to M p}(Q^2, \vec{K}_T) \sim i \int d^2 r \int_0^1 \frac{dz}{4\pi} \left(\Psi_{\gamma^*} \Psi^*_{Q\bar{Q}}\right)(r, z, Q^2)$$

$$\times \; e^{-i\frac{(1-2z)}{2}\vec{r}\cdot\vec{K}_T} \int d^2 b \, e^{i\vec{b}\cdot\vec{K}_T} \, \mathcal{T}(r, b; K_\perp)$$

$$\mathcal{T}(r, b; K_\perp) = 2 N_c \left[1 - \frac{1}{N_c} \mathrm{tr} \left\langle U\left(b + \frac{r}{2}\right) U^\dagger \left(b - \frac{r}{2}\right)\right\rangle_{K_\perp}\right]$$

two gluon exchange:

$$\mathcal{P}(r, K_\perp) = 2\,N_c \left[ -\frac{g^4 C_F}{2} \int_q \frac{1}{q^2\,(\vec{q} + \vec{K}_\perp)^2} \left( e^{i\vec{r}\cdot(\vec{q}+\vec{K}_T/2)} - \cos\left( \frac{\vec{r}\cdot\vec{K}_T}{2} \right) \right) \right] \mathcal{G}(\vec{q}, -\vec{q} - \vec{K}_T)$$

three gluon exchange:

$$\begin{aligned} i\mathcal{O}(r; K_\perp) &= -g^6 \frac{(N_c^2-4)(N_c^2-1)}{4N_c^3} \int\limits_{q_1} \int\limits_{q_2} \frac{1}{q_1^2} \frac{1}{q_2^2} \frac{1}{(\vec{q}_1 + \vec{q}_2 + \vec{K}_\perp)^2} \\ &\times \left[ \sin\left( \vec{r}\cdot(\vec{q}_1 + \frac{\vec{K}_T}{2}) \right) - \frac{1}{3} \sin\left( \frac{\vec{r}}{2} \cdot \vec{K}_T \right) \right] \\ &\times \mathcal{G}_O(q_1, q_2, -K_\perp - q_1 - q_2; K_\perp) \end{aligned}$$

J/Ψ production :

$$\mathcal{A}^{\gamma^* p \to J/\psi\, p}(Q^2, \vec{K}_T) \sim i \int d^2r \int_0^1 \frac{dz}{4\pi} \left(\Psi_{\gamma^*} \Psi^*_{J/\psi}\right)(r, z, Q^2) \times e^{-i\frac{(1-2z)}{2}\vec{r}\cdot\vec{K}_T} \left[\mathcal{P}(r, K_\perp) + iO(r, K_\perp)\right]$$

$\eta_c$ production :

$$\mathcal{A}^{\gamma^* p \to \eta_c\, p}(Q^2, \vec{K}_T) \sim i \int d^2r \int_0^1 \frac{dz}{4\pi} \left(\Psi_{\gamma^*} \Psi^*_{\eta_c}\right)(r, z, Q^2) \times e^{-i\frac{(1-2z)}{2}\vec{r}\cdot\vec{K}_T}\, iO(r, K_\perp)$$

- Odderon exchange predicted by QCD
- no clear evidence found at small-x (HERA)
- perhaps better to look at "large" x
  and production of $\eta_c$ using high luminosities of JLAB, EIC

## Prior literature on Odderon exchange and $\eta_c$ production

* Fukugita, Kwiecinski: Phys. Lett. 83B (1979)
* Czyzewski, Kwiecinski, Motyka, Sadzikowski, PLB 398 (1997)
* Schäfer, Mankiewicz, Nachtmann, Proc. of Workshop Physics at HERA, Hamburg (1991)
* Engel, Ivanov, Kirschner, Szymanowski, EPJ C4 (1998)

## Real part of $\mathcal{A}^{\gamma^* p \to J/\psi\, p}$

* Kowalski, Motyka, Watt: PRD 74 (2006) phenomenological "correction"

## 3-gluon exchange contribution to J/ψ production

* Brodsky, Chudakov, Hoyer, Laget, PLB 498 (2001), at threshold

- new result here is relationship to proton LF wave function and color charge form factors; (fundamental elements of QCD)

+ suggestion to search at large x ~ 0.1

# Summary

- Color charge correlations described by form factors
- Related to L.F. wave function of the proton
- Novel "odderon" form factor from 3-gluon exchange
- Could be measured in exclusive $J/\psi$ and $\eta_c$ production in DIS at (moderately) large x
- Initial conditions for small-x evolution