RACF/SDCC Network Operations
Status Report (Aug 16, 2018)

Alexandr ZAYTSEV

alezayt@bnl.gov

Project: RACF/SDCC Network Operations & Interventions

Chart

This chart shows the number of issues **created** vs the number of issues **resolved** in the last **243** days.

220

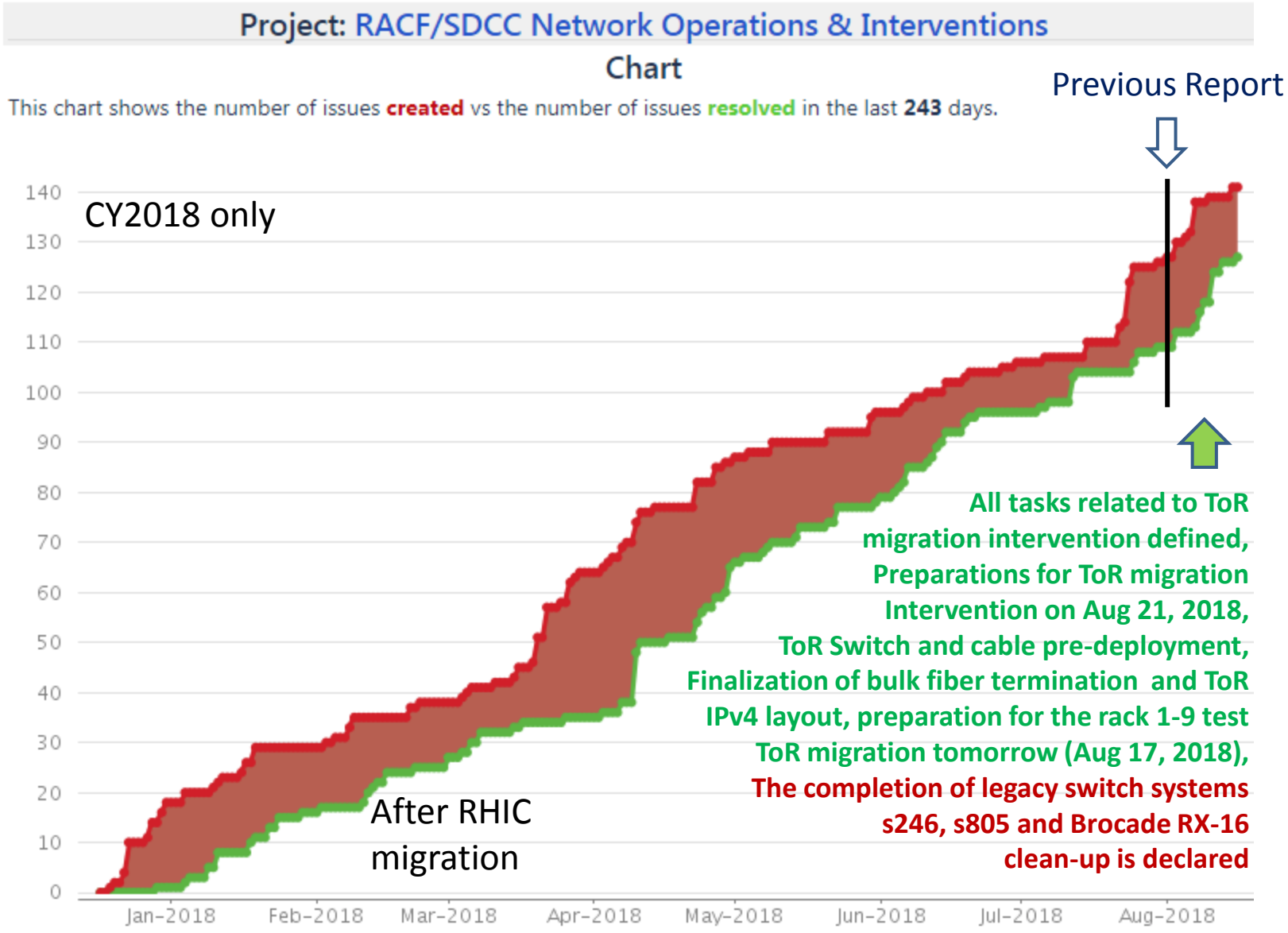

Project: Post RHIC Migration BCF & CDCE Cleansing & Service Normalization (2018Q1-3)

Chart

This chart shows the number of issues **created** vs the number of issues **resolved** in the last **300** days.

Previous Report

180

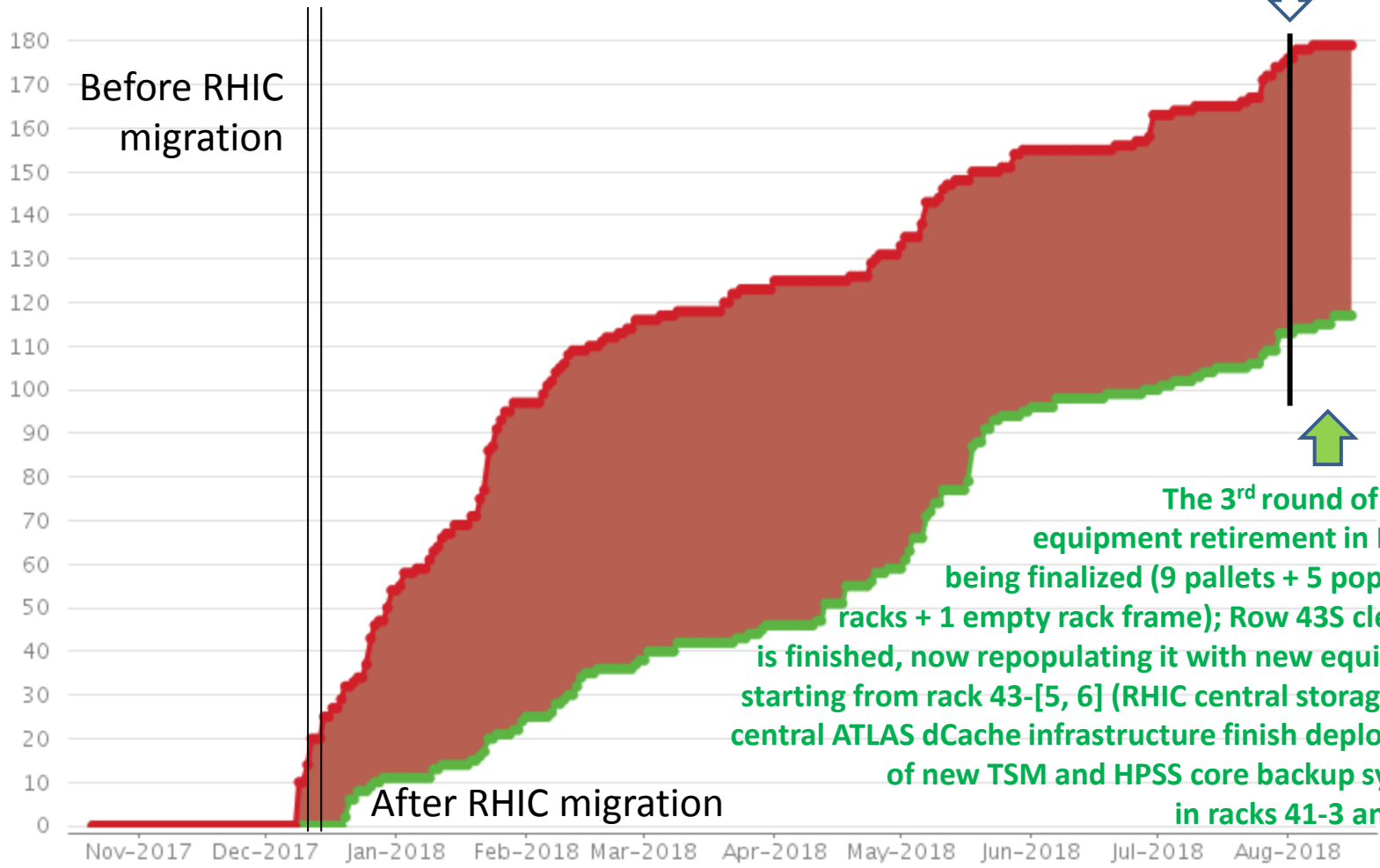

The 3rd round of legacy equipment retirement in FY18 is being finalized (9 pallets + 5 populated racks + 1 empty rack frame); Row 43S clean-up is finished, now repopulating it with new equipment starting from rack 43-[5, 6] (RHIC central storage, new central ATLAS dCache infrastructure finish deployment of new TSM and HPSS core backup systems in racks 41-3 and 43-6

Power Interventions in CDCE (Jul 23 – Aug 3, 2018)

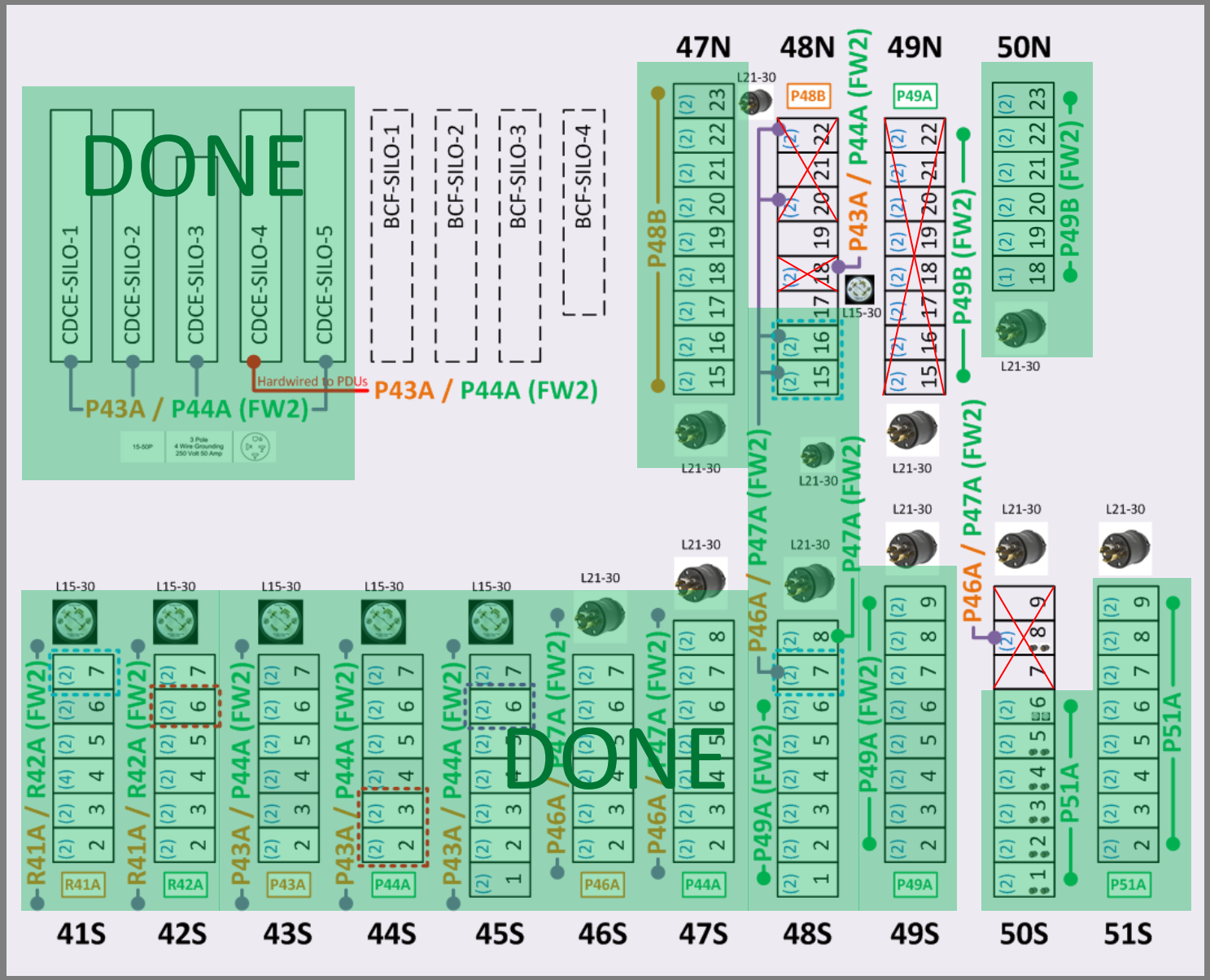

Power Interventions in CDCE:
Receptacle Work Begins on Aug 21, 2018

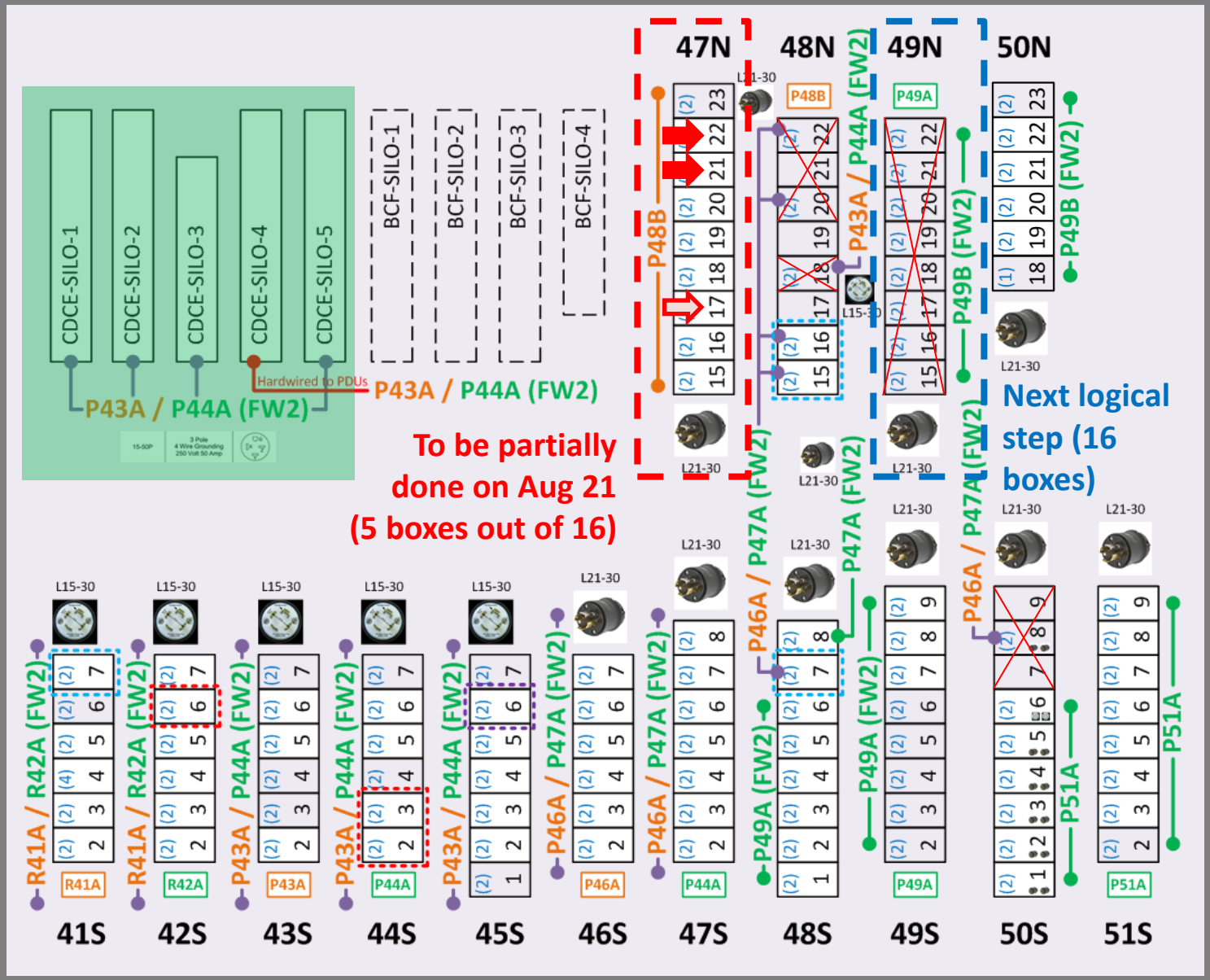

Recent Developments

- Retirement of the legacy BNL Cloud installation (racks 49-[15-19]) and its out-of-support legacy Brocade RX-16 network core (rack 48-19) is scheduled for July 2018
  - Racks a being sanitized by the Farm group [DONE]
  - The RX-16 switch is removed from CDCE (rack 48-19 is still blocked by CDUs - resolved)
  - CDUs are unplugged and extracted in all 5 racks 49-[15-19]
  - All 5 racks are ready for removal in the 4th round of equipment requirement of FY18
- New equipment deployments and existing equipment migration In Aug-Sep'18:
  - New RHIC central storage rack (rack 43-5, rack frame replaced and powered up, the rack is populated with equipment and being deployed by the Storage Group)
  - New central ATLAS dCache infrastructure (rack 43-6, rack is powered up and ready)
  - New shared PHENIX and STAR storage infrastructure rack 45-6 (rack is powered up and being populated by equipment being migrated from BCF – stargrid* nodes moved first, and PHENIX DBs and dCache nodes to follow on Aug 21, 2018)
  - New ATLAS HPSS movers rack 44-4 (new rack frame deployed, no CDUs yet)
- Procurement of 28x Arista 7020T ToR switches plus associated copper and fiber material for complete replacement of legacy s803/s804 (Exascale) switches
  - All ToR switches and new copper cables (where needed) are pre-deployed and ready
  - No blocking issues left for performing the ToR migration
  - Full day of ToR/NFS/GPFS migration Intervention is scheduled on Tuesday Aug 21, 2018

No More Blocking Issues for Aug 21, 2018 Intervention

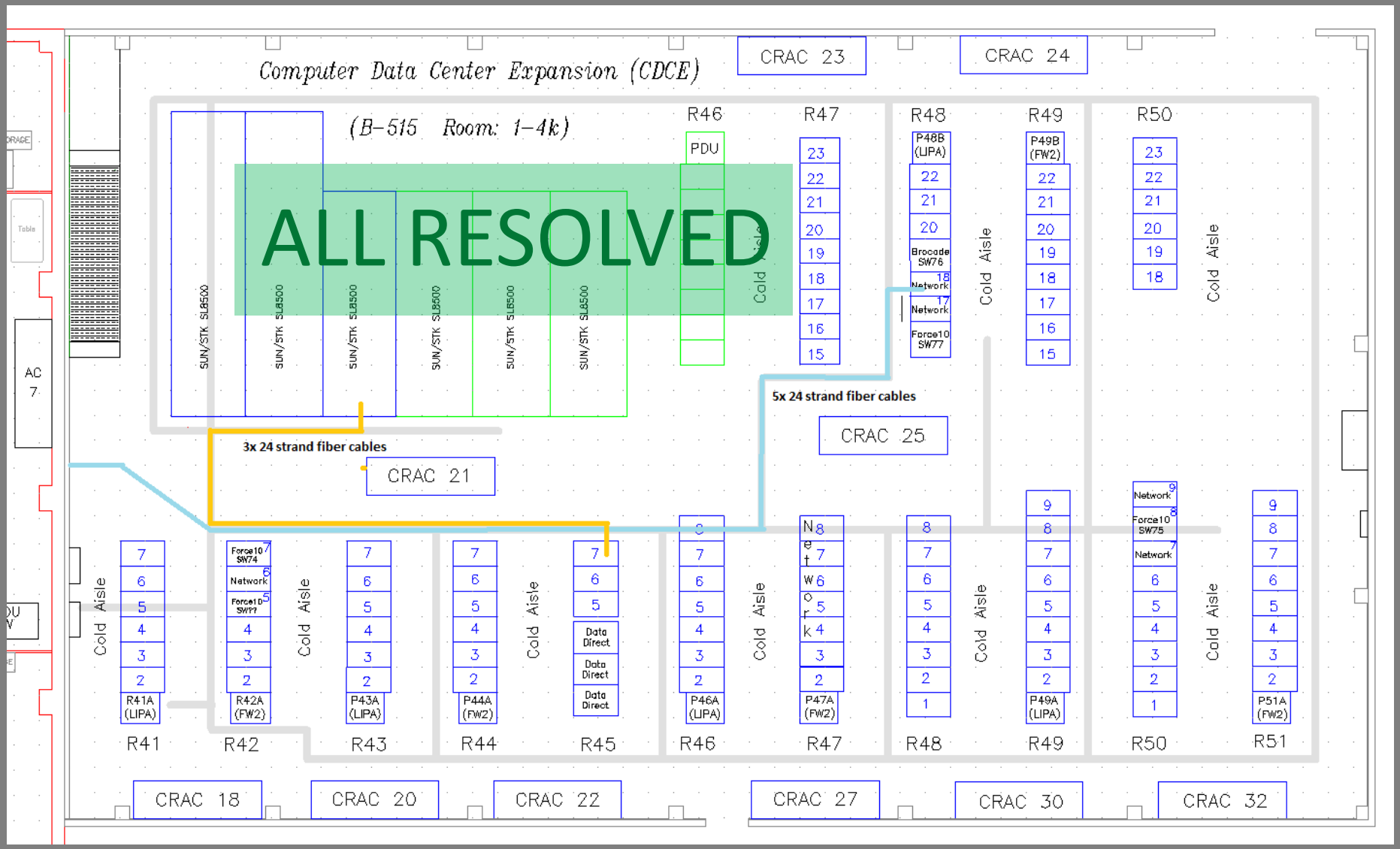

New HPSS FC Infrastructure Deployment

STEP 1: New TSM Setup in Row 41

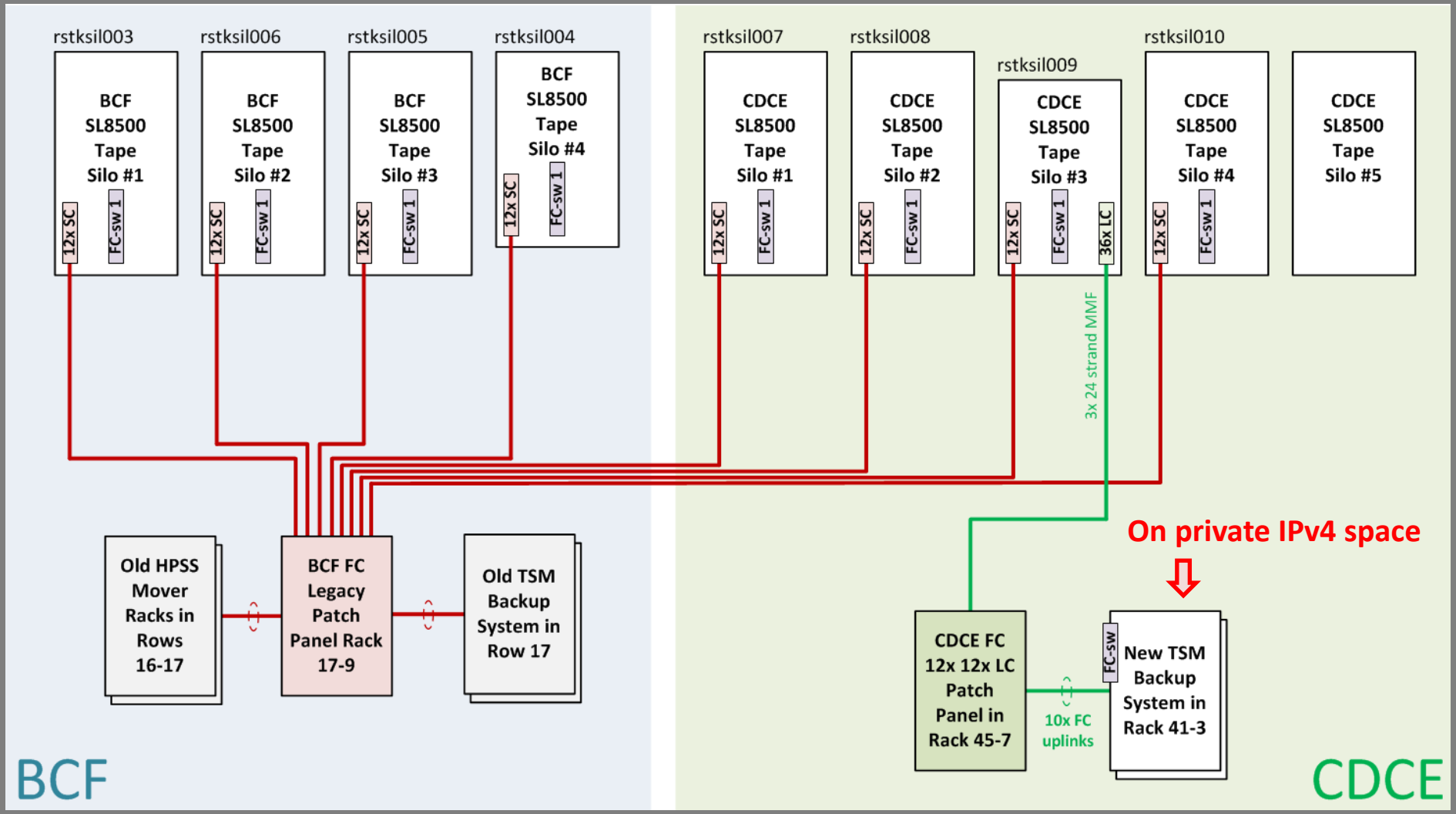

New HPSS FC Infrastructure Deployment

STEP 2: New ATLAS Movers in Row 44

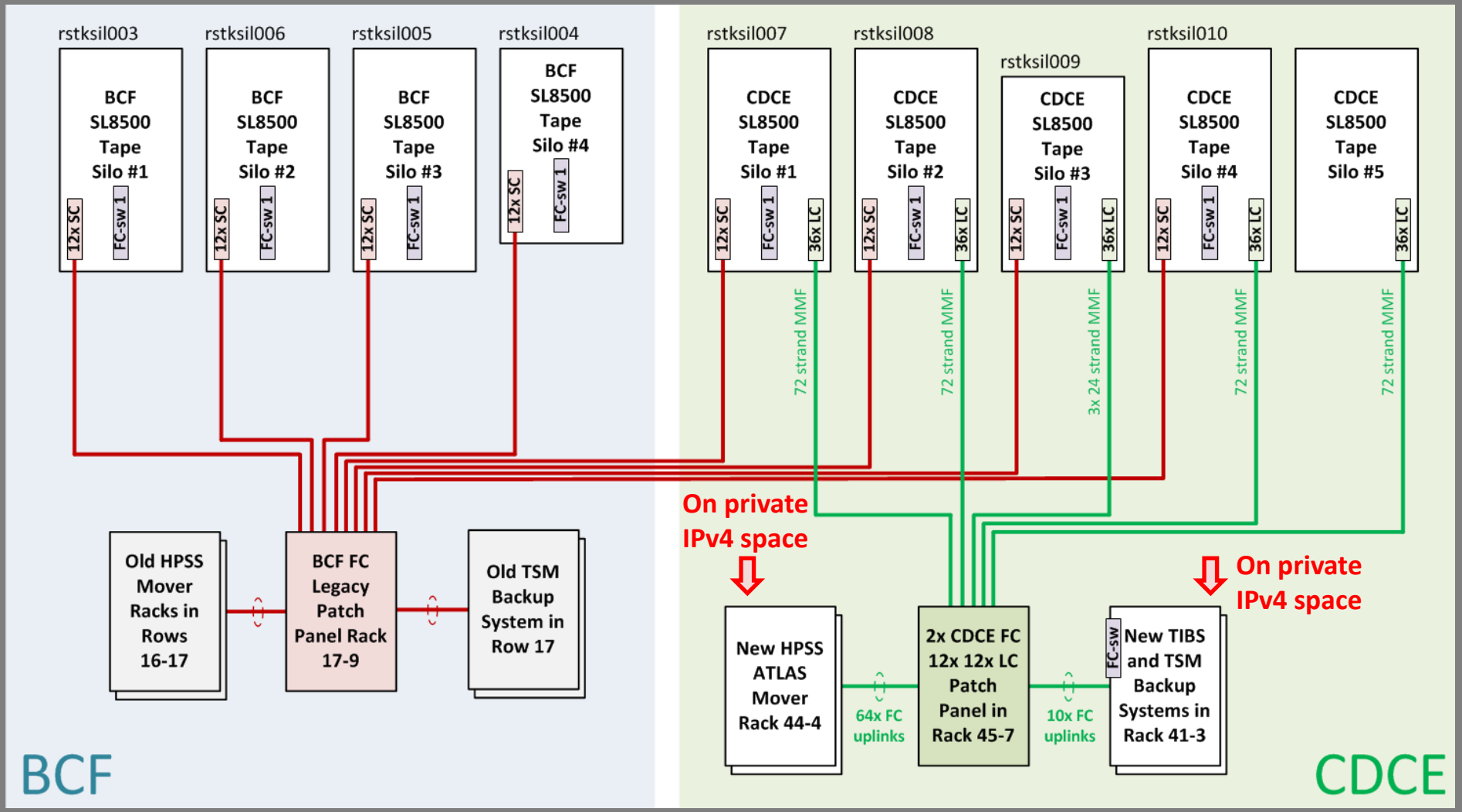

USATLAS Web Infrastructure Move to SciZone
(Operation Delayed Since the RHIC Move in Dec'17)

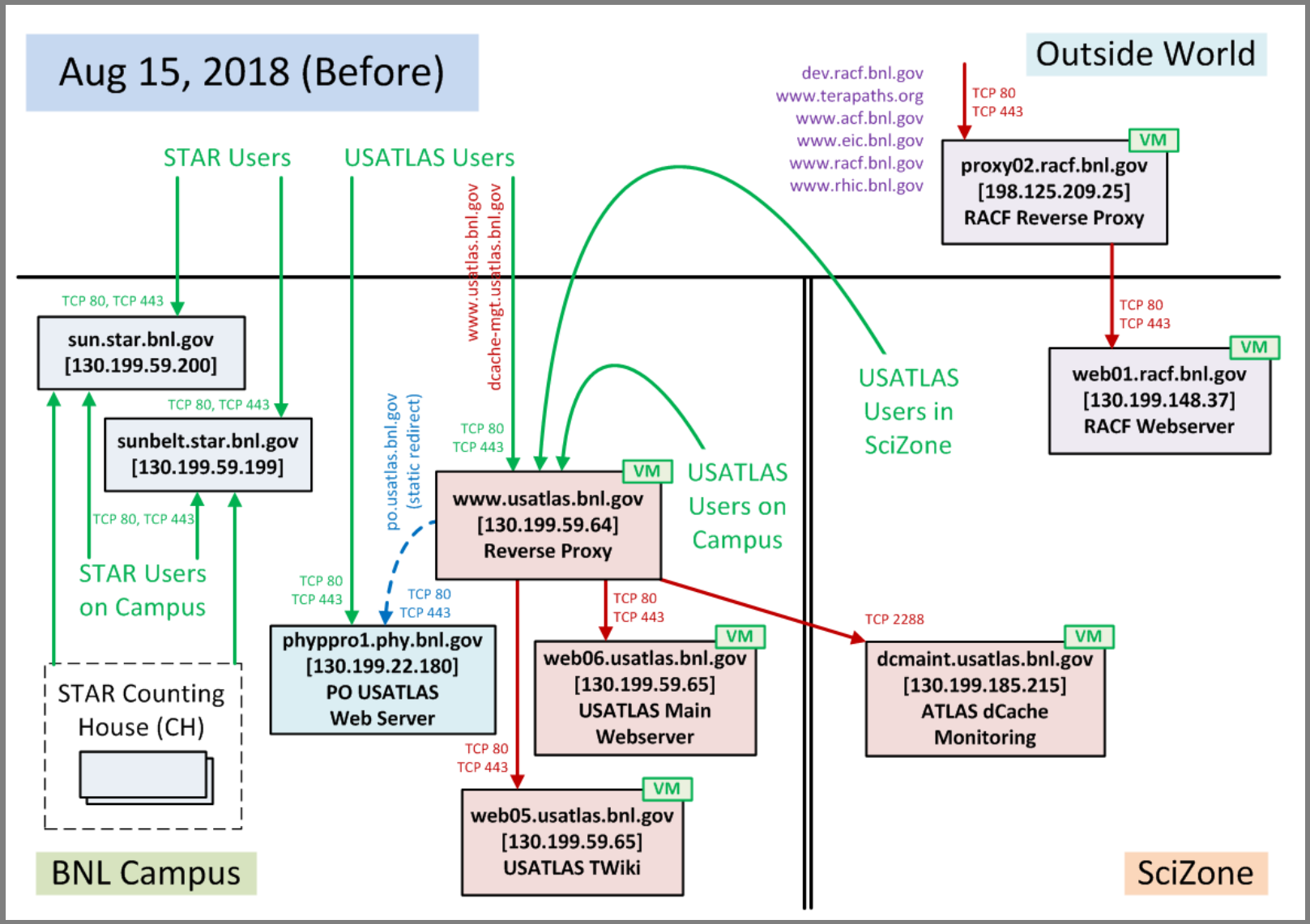

USATLAS Web Infrastructure Move to SciZone (Performed Today)

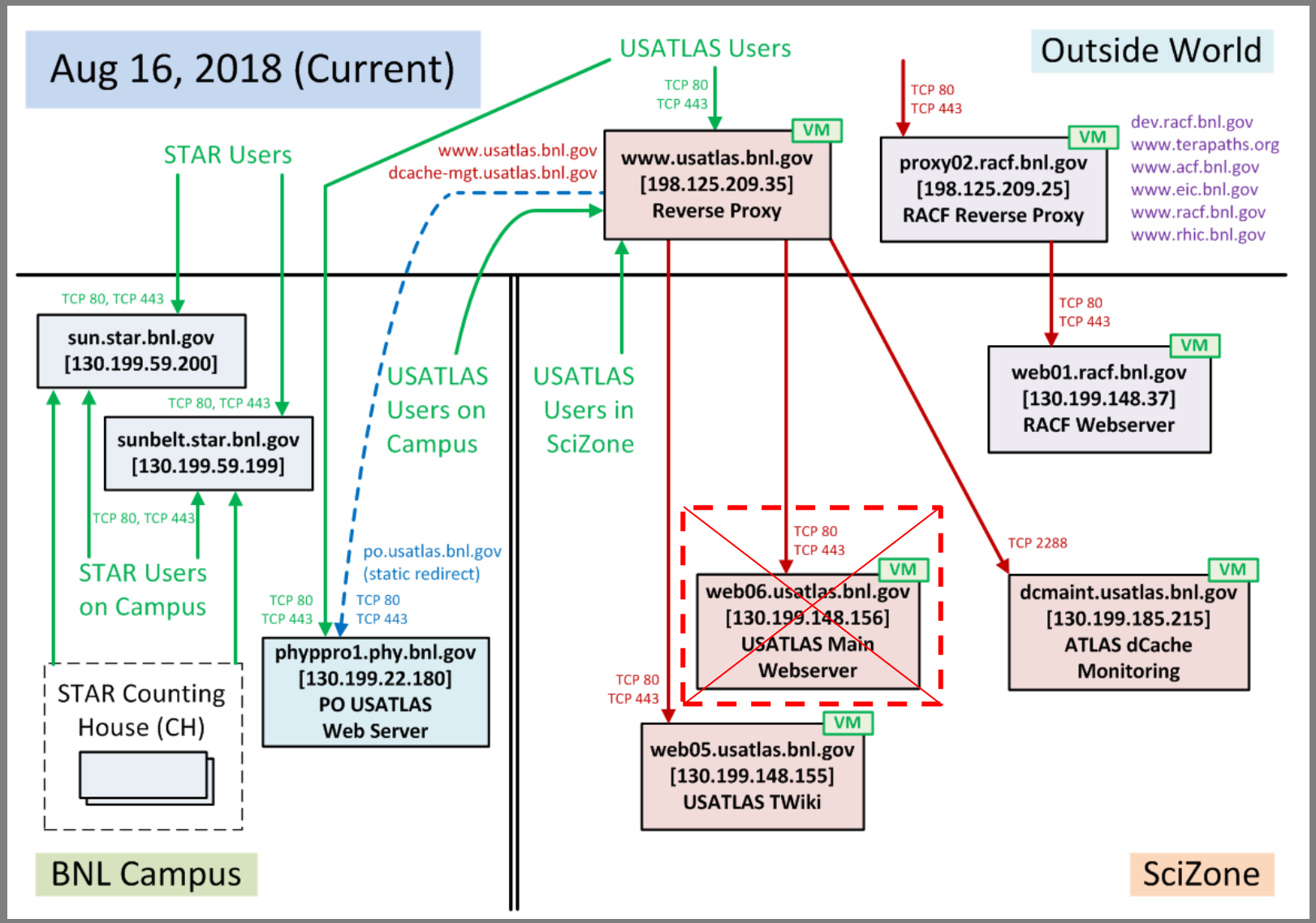

ToR Switch Migration Preparation

- DNS clean-up for RHIC Farm 1 GbE subnets (nearly done)
- Phasing out lsstnfs2.lst.bnl.gov (GS group)
- Re-IP-ing / virtualizing xrdstar0[1, 2].rcf.bnl.gov (Storage Group)
- Retiring Brahms compute node rcas0006 (Farm Group, nearly done)
- Retirement of the legacy PHENIX dCache DTN node phnxdoor03.rcf.bnl.gov (done, node physically removed from rack 4-9)
- PHENIX central DB and dCache infrastructure move from rack 4-9 (BCF) to the shared RHIC storage infrastructure rack 45-6 (sharing space with stargrid*)
  - phnxdbrcf[1, 2, 4, 5, 7].rcf.bnl.gov & phnxcore[03, 04].rcf.bnl.gov
  - No configuration change, no re-IP-ing needed
- Re-cabling of the affected RHIC racks to ToR is expected to start at 10:30 on Tuesday Aug 21, 2018 and should last no longer than an hour (all ToR switches are already configured and in their final positions in the racks)
  - Work is coordinated through FO-1 (Farm Operations) and NETOPS-162 JIRA tasks
  - SciZone and RHIC CH perimeter firewall upgrades are going to happen between 8:00 and 9:00 on Tuesday Aug 21, 2018 (expected to be transparent)

Legacy Network Equipment Replacement Timeline

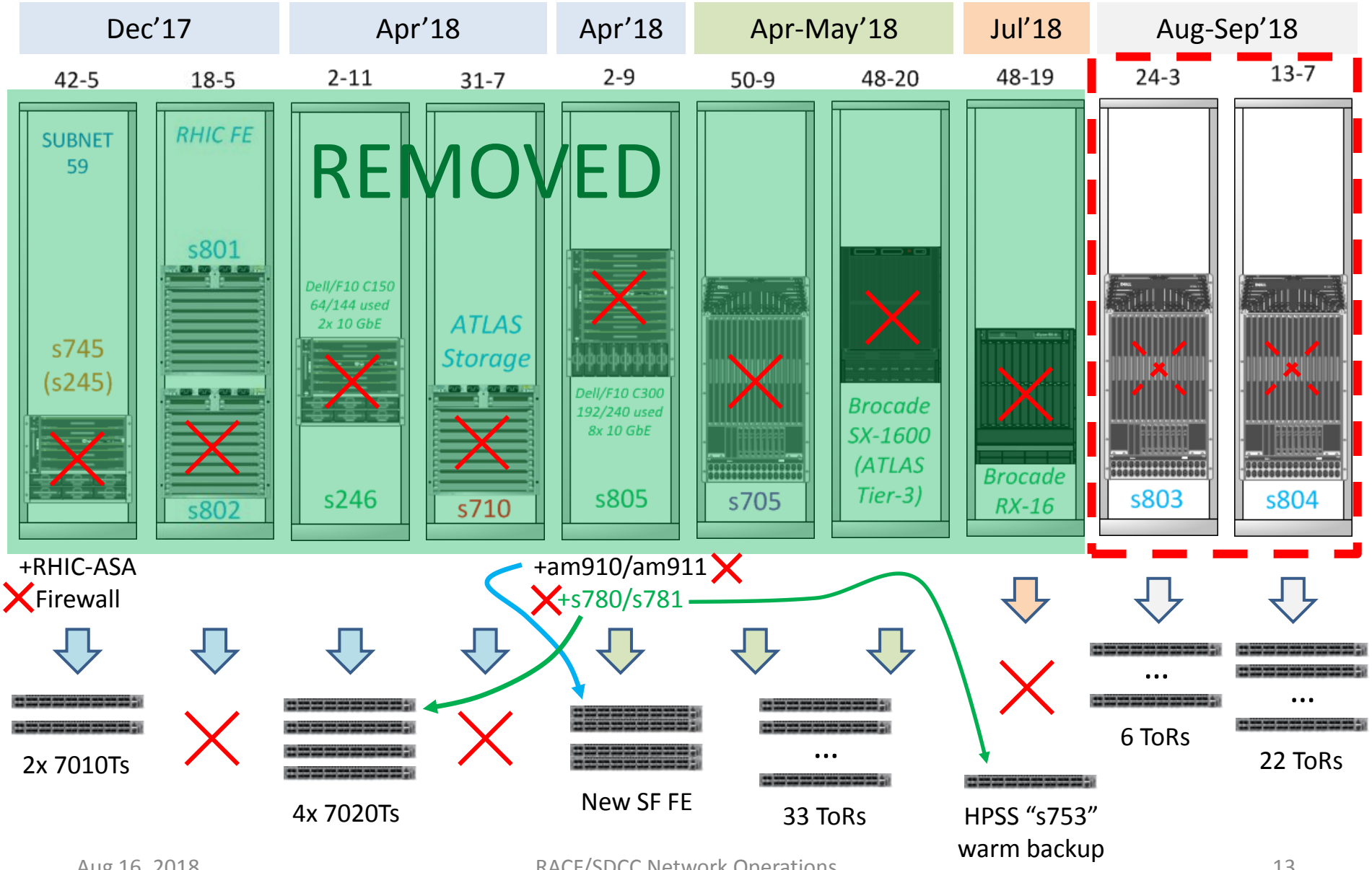

Questions & Comments