Status of magnetic measurements at ALBA

J. Campmany,

J. Marcos, V. Massana, L. Ribó, C. Colldelram, F. Becheri,
J. V. Gigante, J. Jamroz, J. Nicolàs, D. Alloza, R. Petrocelli


Sintec
Sintec
flinners

Outline

- **Some measurements:**

  Measurements of multipole magnets (IFMIF, ESS)
  Measurements of SLHC sextupole (warm)
  Measurement of phase-shifter for E-XFEL
  Design and measurement of magnets for cold-cathodes improvement

Some improvements:

Improvements in **Hall probe** bench (calibration and new sensors)
Improvements in **rotating coil** bench (PCB coils)
Improvements in **ancillary equipment** (PS)

Some cross-checking:

Cross-checking between Hall probe and Rotating coil measurements

Some measurements done at ALBA

- IFMIF, ESS quadrupoles
- SLHC sextupole
- E-XFEL phase-shifter
- Magnetic arrangement for Cold Cathode gauges

IFMIF, ESS quadrupoles CIEMAT, ESS-Bilbao

Inner diameter:
56 mm, 63 mm

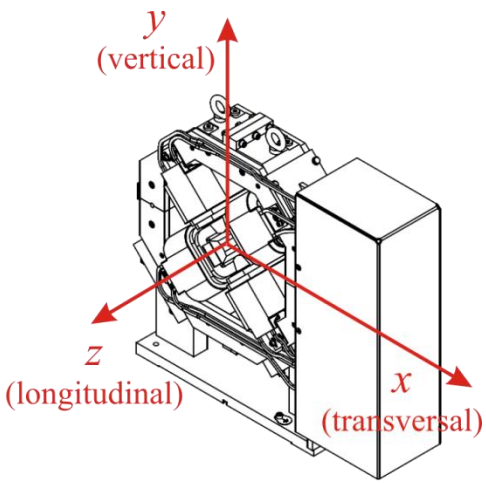

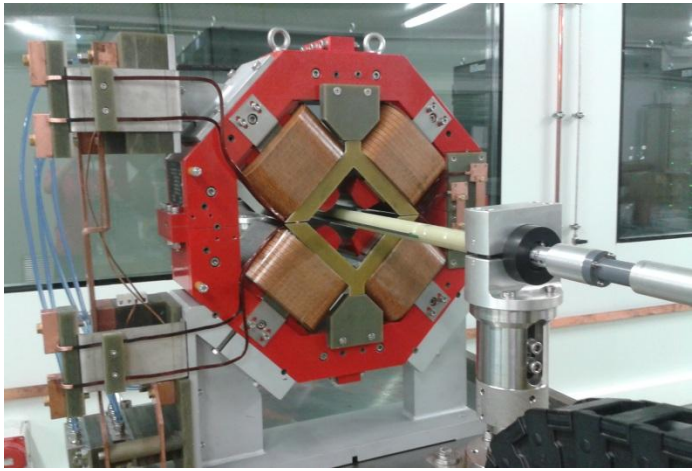

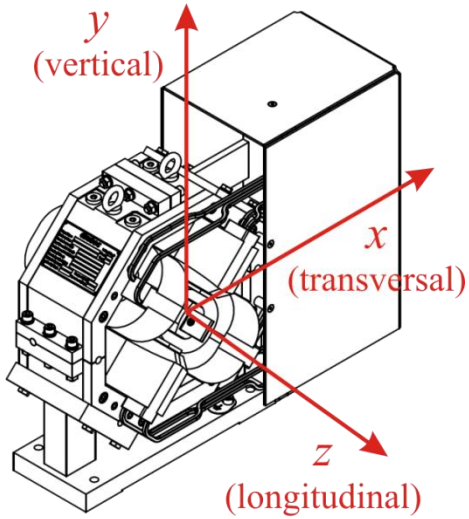

Full characterization:

- Harmonics of integrated field up to 20 at a number of currents
- Mechanical offsets, tilt angle at a number of currents
- Quadrupole at central plane at a number of positions
- In the case of IFMIF quad, cross-talking with integrated steers

Methodology:

- Small shaft (24 mm diameter)
- Rotating coil measurements at a number of lateral positions
- Tilt angle and mechanical offsets «autocalibrated»

SLHC sextupole (CIEMAT)

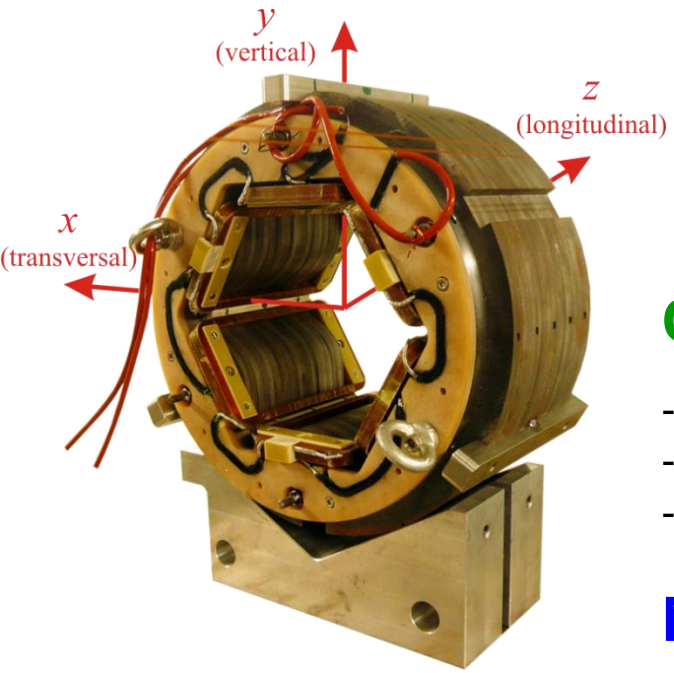

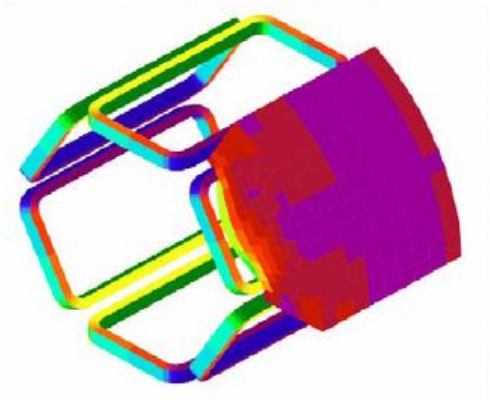

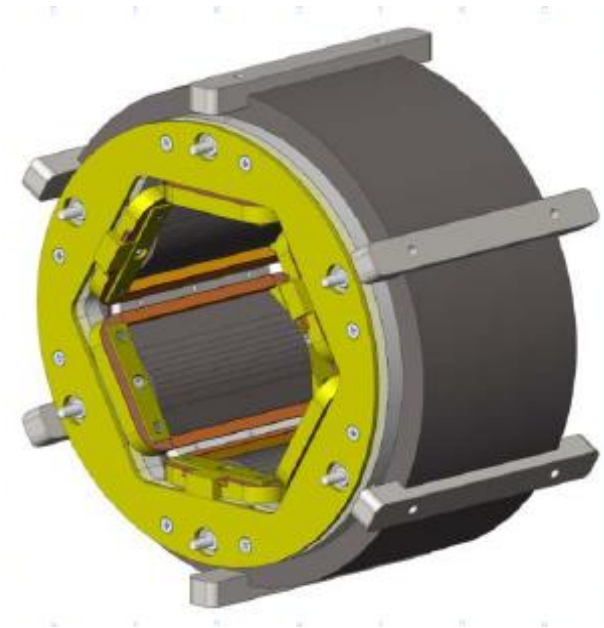

Characterization:

- Fieldmap in horizontal plane (Hall probe bench)
- Fieldmap in cilindrical surface for harmonic analysis (Hall probe)
- Integrated multipoles with Rotating coil up to harmonic 30

Methodology:

- Measurements at 0.5 A (nominal, in cold, 100 A)
- Cross-checking between Hall probe and rotating coil

E-XFEL phase shifter prototypes (CIEMAT)

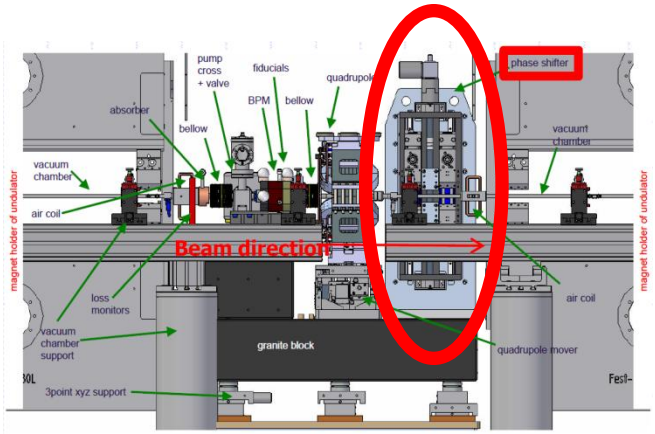

Characterization:

- Fieldmap in horizontal plane (Hall probe bench)
- Field integral direct measurement (Flipping coil bench)

Methodology:

- The goal was to shim the phase-shifter using metallic shims in order to obtain field integrals lower than $4 \cdot 10^{-6}$ T·m for all gaps
- We identified the screening iron quality as the main error source (magnetization)

Cold cathode gauges optimization

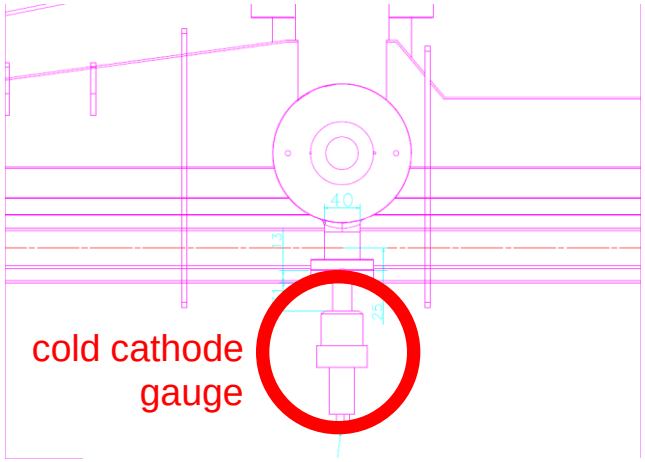

During accelerator operation, some electrons scattered by synchrotron radiation in Cu absorbers impinge the cold cathode gauges and mask pessure reading, which fall to zero.

Solution proposed at DIAMOND:

***Deflect scattered electrons** avoiding **any influence on the circulating e-beam** the storage ring.*

Objective: design, build and test a magnetic deflector

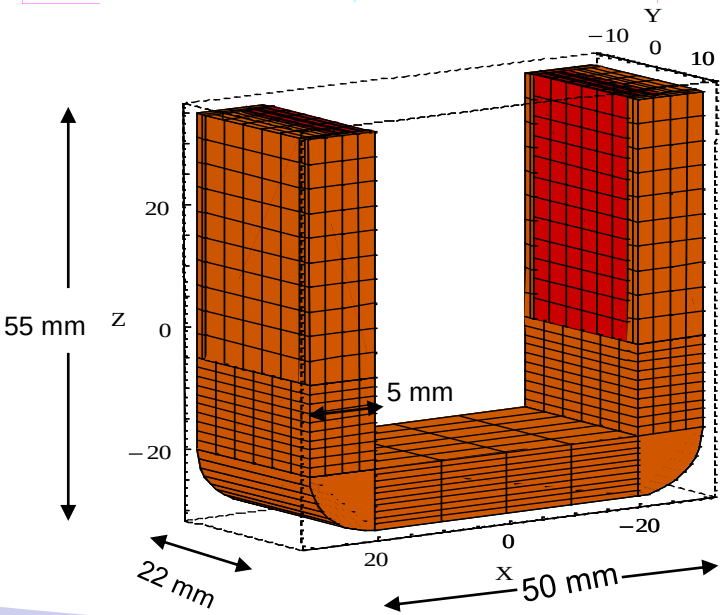

IRON in orange
***NdFeB magnets**.*
(40x20x5 mm)
They are shifted 15 mm with respect to the axis of the tube.

GOAL:

- High magnetic field in the orbit direction (no interaction).
- Very low field in the plane perpendicular to orbit.

Bx (x, y=0, z=0)

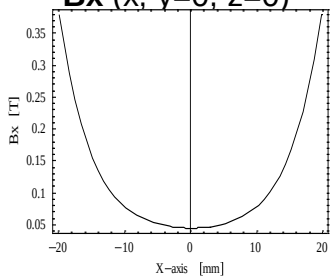

Deflection field:
on axis at cold
cathode tube

B_x ~0.05 T

By (x, y=0, z=-67)

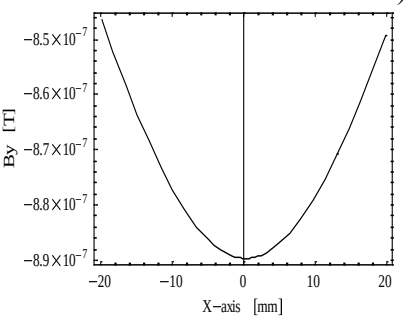

Bz (x, y=0, z=-67)

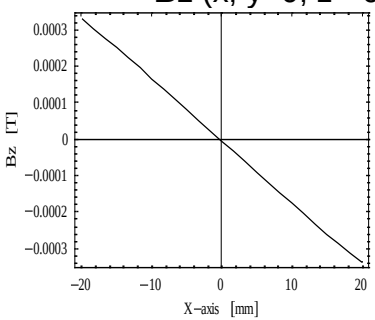

Maximum perpendicular fields close to vacuum chamber wall:

$B_y < 10^{-6}$ T $\qquad$ $B_z < 10^{-4}$ T

Bz (x=0, y, z=-67)

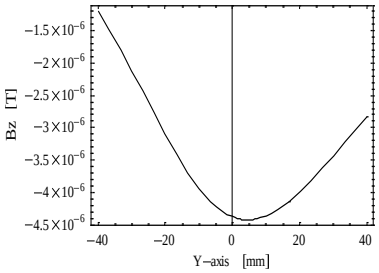

By (x=0, y, z=-67)

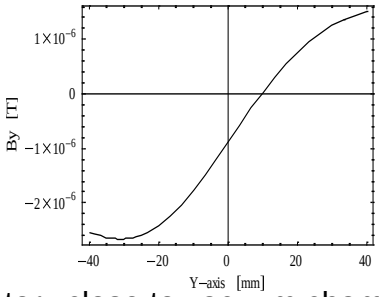

Field integrals along orbit trajectory close to vacuum chamber wall:

$I_y < 0.5 \cdot 10^{-6}$ T·m $\qquad$ $I_z < 0.5 \cdot 10^{-6}$ T·m

Improvements in ALBA magnetic facilities

- Improvements in Hall probe bench
- Improvements in rotating coil bench
- Improvements in ancillary equipment

New Hall 3D sensors

- Perpendicular finger

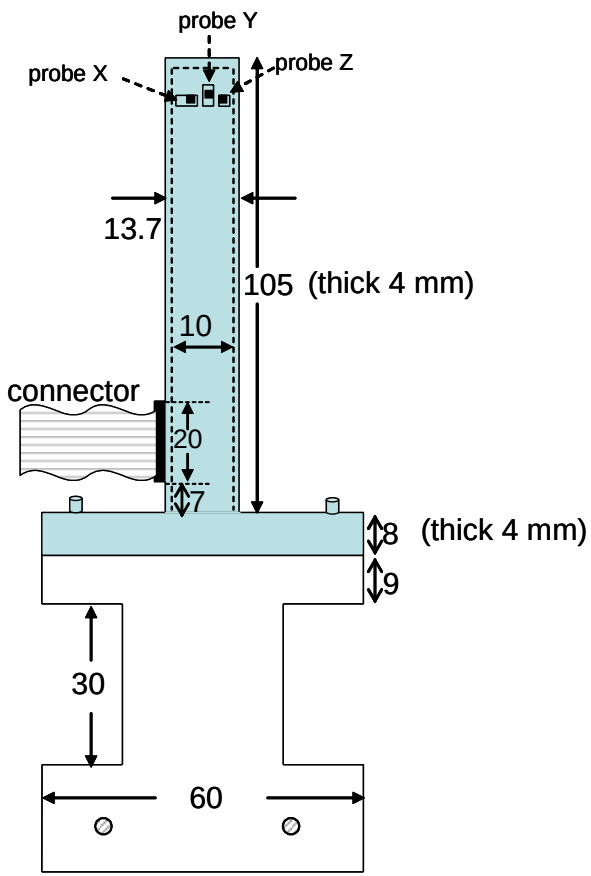

- Long (400 mm) finger

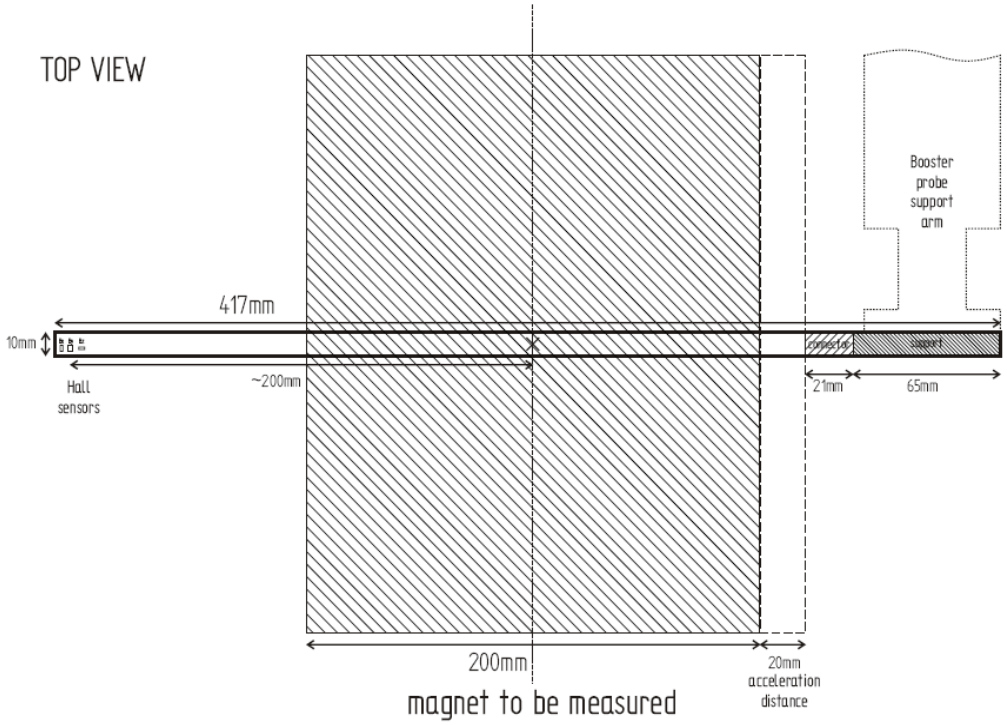

New Hall 3D sensors

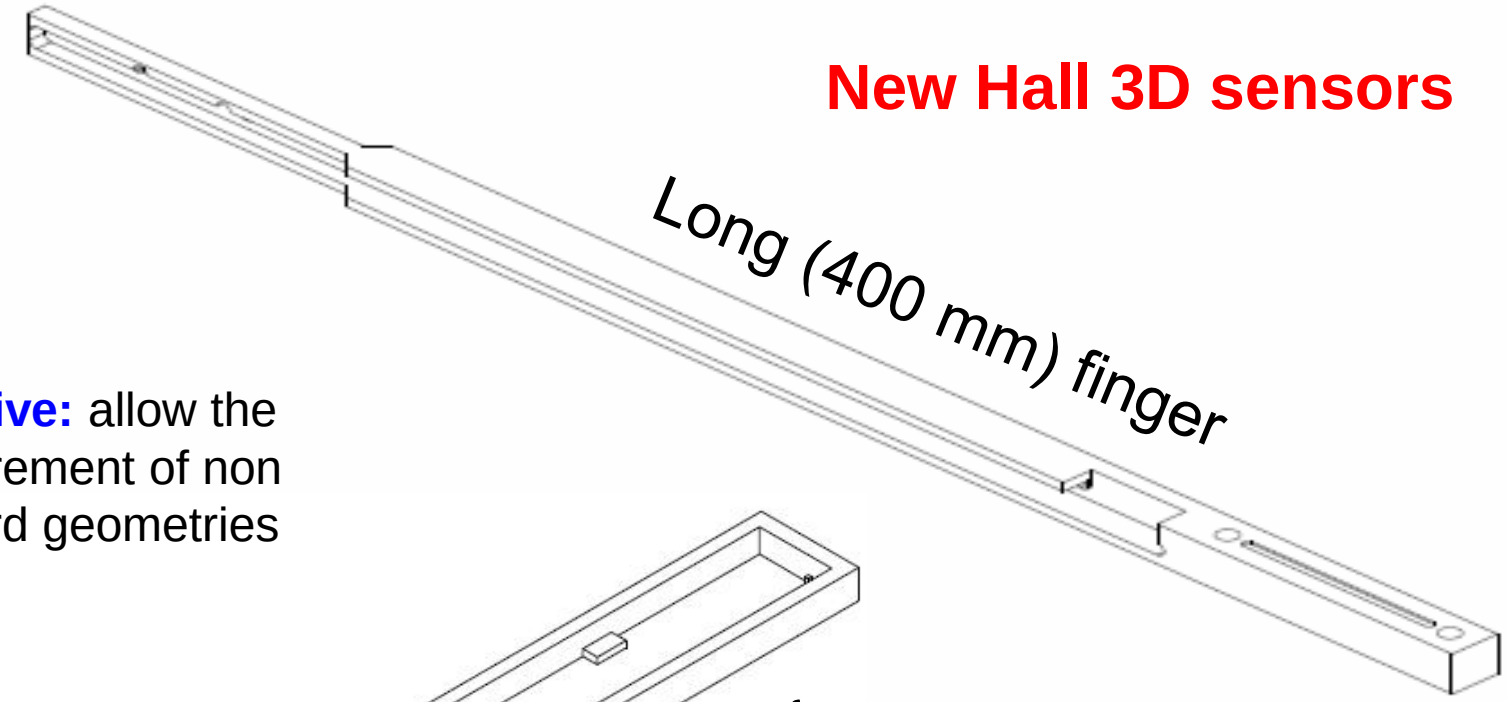

Objective: allow the measurement of non standard geometries

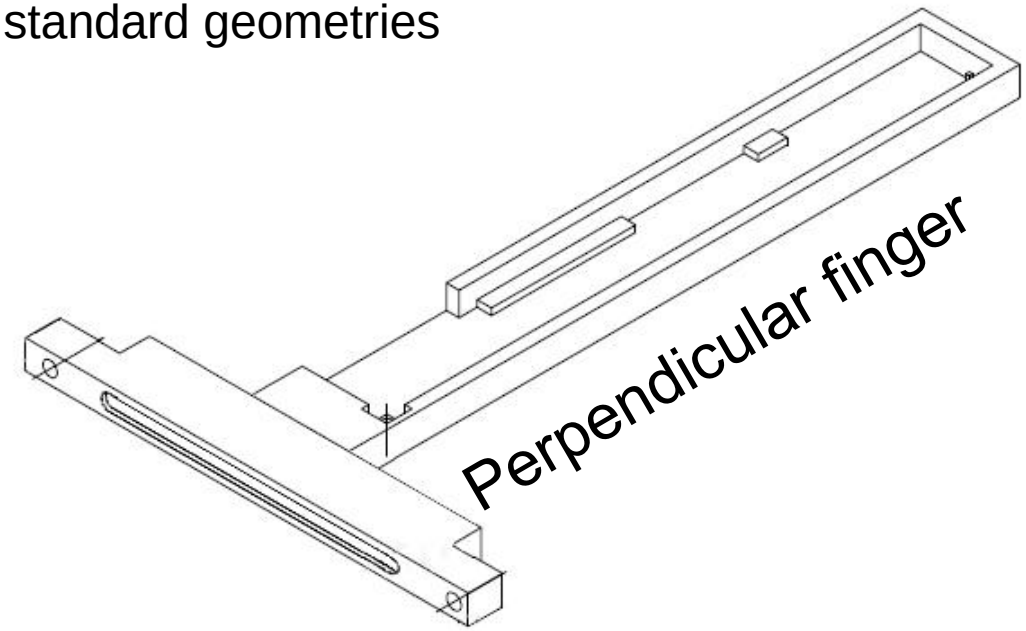

New Hall sensors

Hall head for small measurements: developed for “closed structures” new bench prototype (see talk *Looking for a Hall probe bench for closed big magnetic structures* on Wednesday)

Overall dimensions: 13 x 25 x 2 mm
Weigth: 0.75 g

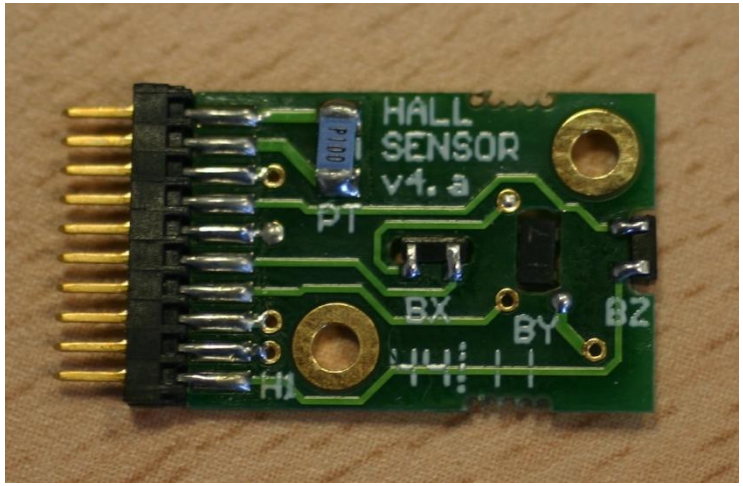

F.W. Bell Hall sensors, **Model GH-700**

Improving calibration

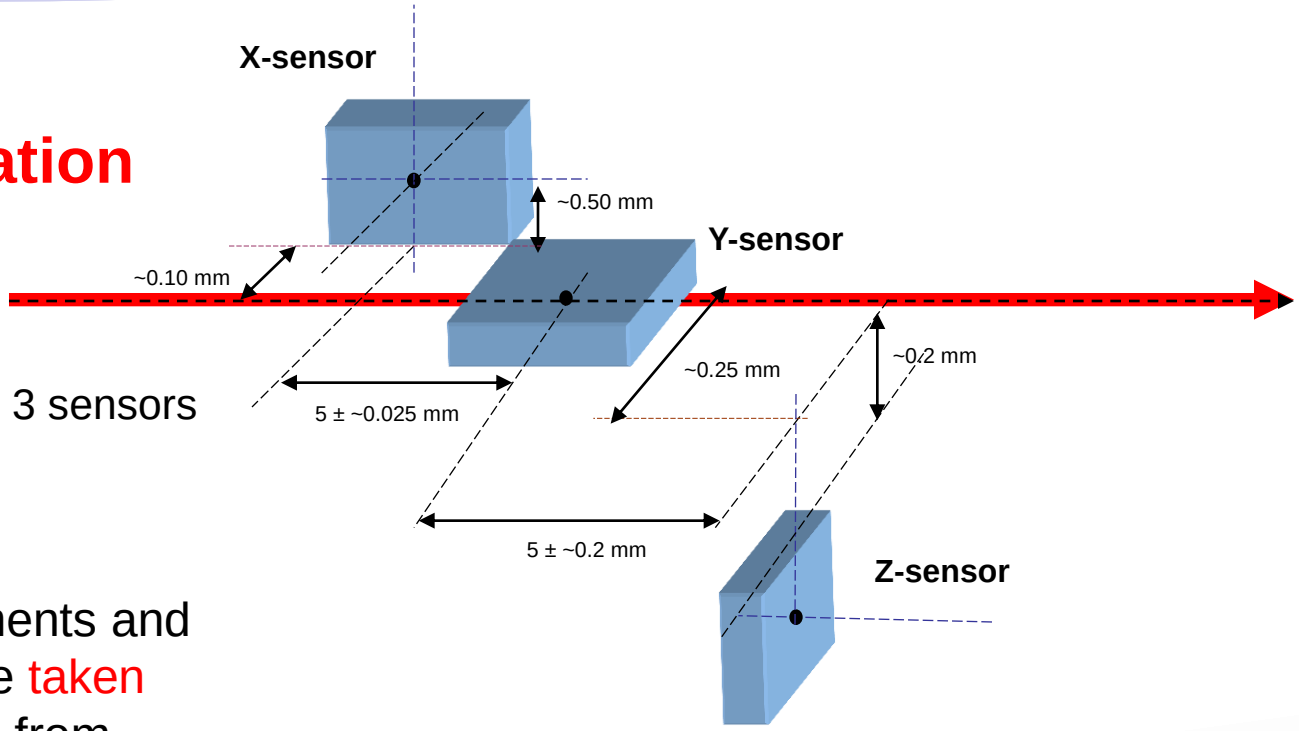

Misalignments between the 3 sensors

- Relative displacements and assembly angles are taken into account to pass from measured V to calculated B

- A new method for calibrating displacements and angles has been established

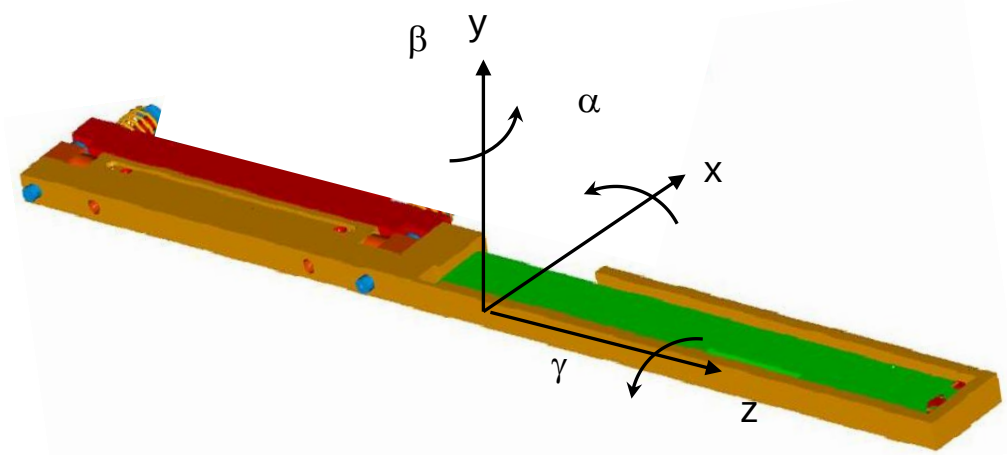

Improving calibration

Determination of $\pm x_b$, $\pm y_b$, $\pm z_b$, $\pm x_c$, $\pm y_c$ and $\pm z_c$ using Maxwell equations:

Any magnetic field measured with the probe must fulfill:

$$\begin{cases} \vec{\nabla} \cdot \vec{B}(\vec{r}) = 0 \\ \vec{\nabla} \times \vec{B}(\vec{r}) = 0 \end{cases} \Rightarrow \begin{cases} f_1(\vec{r}) = \partial_x B_x(\vec{r}) + \partial_y B_y(\vec{r}) + \partial_z B_z(\vec{r}) = 0 \\ f_2(\vec{r}) = \partial_y B_z(\vec{r}) - \partial_z B_y(\vec{r}) = 0 \\ f_3(\vec{r}) = \partial_z B_x(\vec{r}) - \partial_x B_z(\vec{r}) = 0 \\ f_4(\vec{r}) = \partial_x B_y(\vec{r}) - \partial_y B_x(\vec{r}) = 0 \end{cases}$$

$$\Rightarrow g(\vec{r})^2 \equiv f_1(\vec{r})^2 + f_2(\vec{r})^2 + f_3(\vec{r})^2 + f_4(\vec{r})^2 = 0$$

Cost function to be minimized by fitting displacement parameters for a volume V as:

$$\boxed{\xi = \sqrt{\frac{1}{v}\int_v g(\vec{r})^2 \, \mathrm{d}v} = 0}$$

Method presented by **Jordi Marcos** at **IMMW15**: *Construction & Commissioning of a 3D Hall probe bench for Insertion Devices measurements at ALBA Synchrotron Light Source*

Accuracy in determination of displacements ~50—100 μm

Looking for best accuracy, we realized the importance of having high gradients in all spacial directions. We also realized the need to include angular misalignments of Hall probe head.

Improving calibration

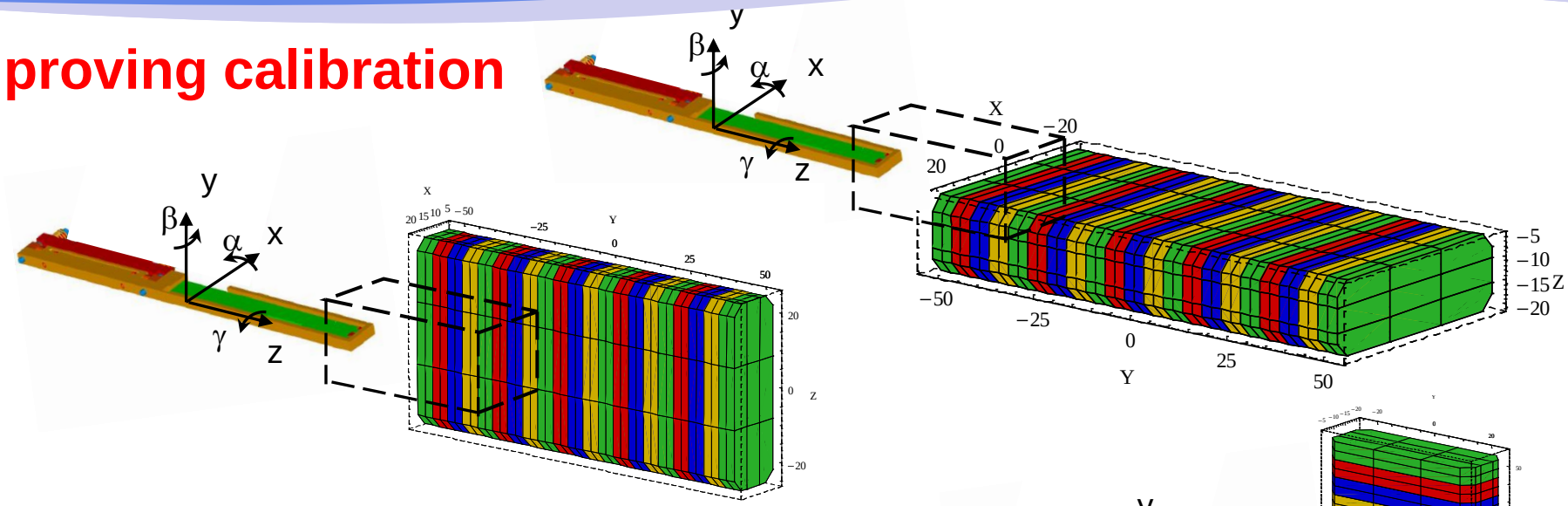

We improved the methodology using an undulator section with high gradients and combining the measurements made in complementary orientations. Also the overal angles of the arrangement have been included as parameters to be fitted.

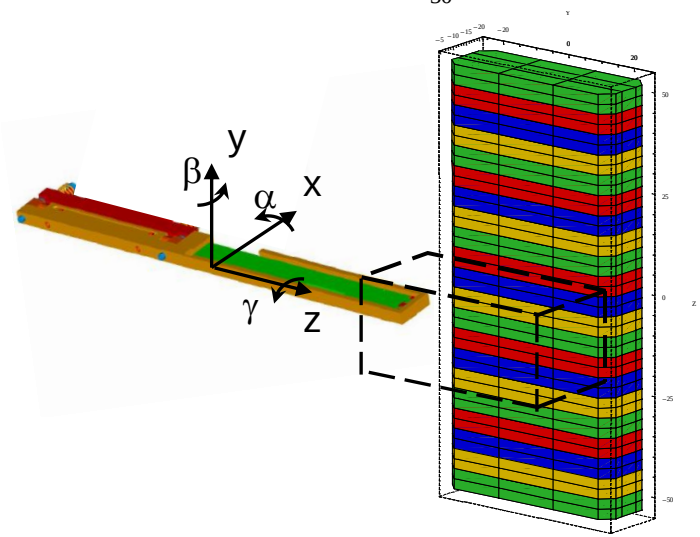

New achieved accuracy: ~ ±5 μm , ~ ±1.5 mrad

	δX_x (mm)	δX_y (mm)	δX_z (mm)	δZ_x (mm)	δZ_y (mm)	δZ_z (mm)	α (mrad)	β (mrad)	γ (mrad)
simulated	0.080	0.430	–0.020	–0.280	0.200	–0.200	–8.75	17.50	52.350
error	+0.003	-0.004	-0.004	+0.004	-0.006	-0.003	-1.2	-0.8	-1.6

Improving rotating coil bench

New PCB-coils shafts: diameter 24 mm and 44 mm




Each PCB: 5 coils (for compensated meas.)
Each coil: 9 tracks x 21 layers = 189 turns

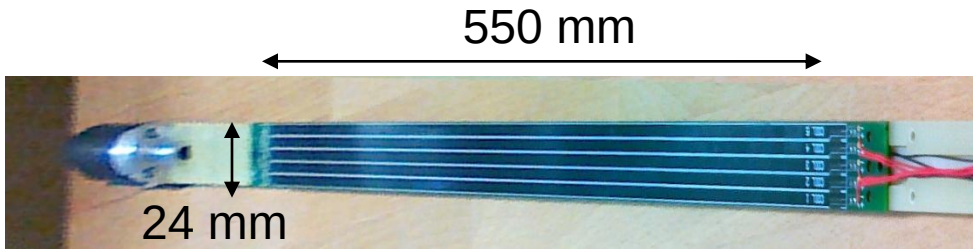

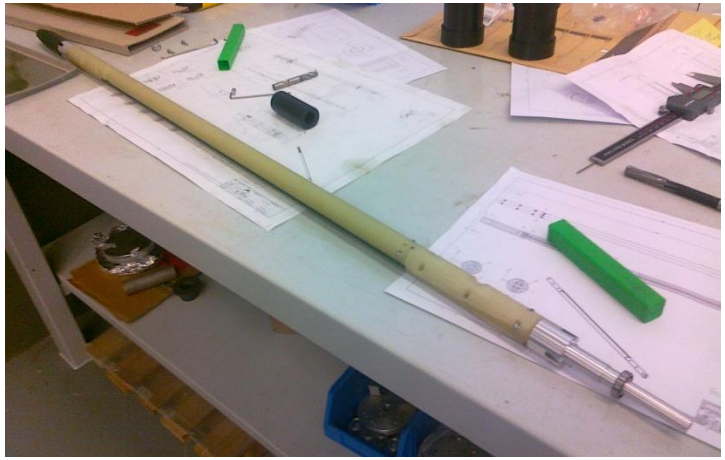

Improving rotating coil bench

New PCB-coils shafts: diameter 24 mm and 44 mm

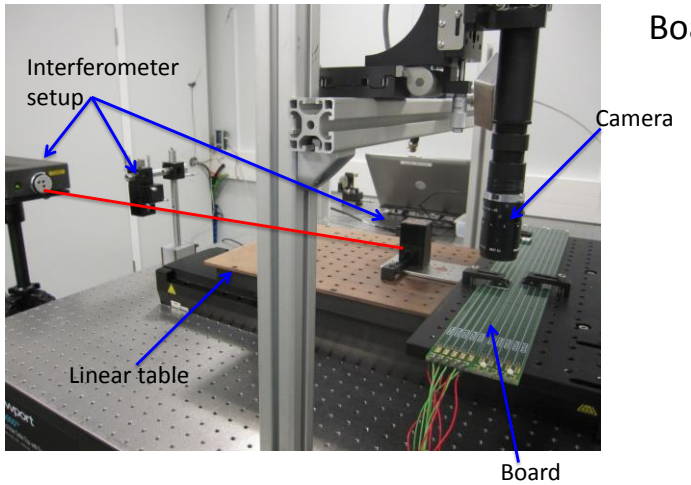

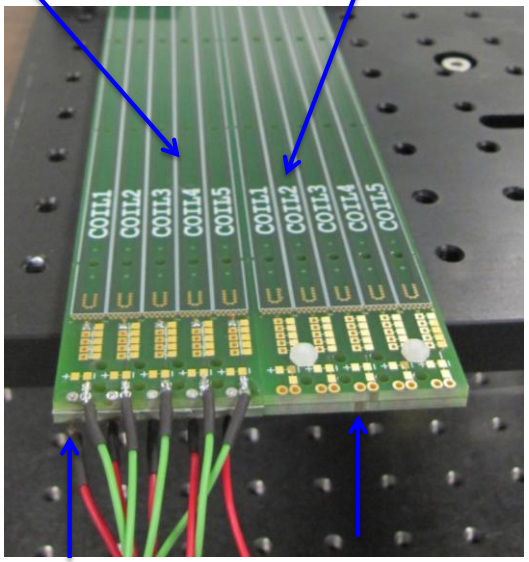

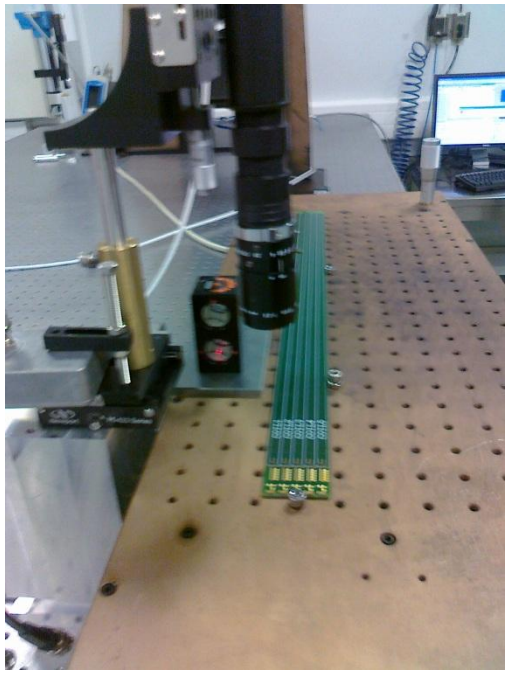

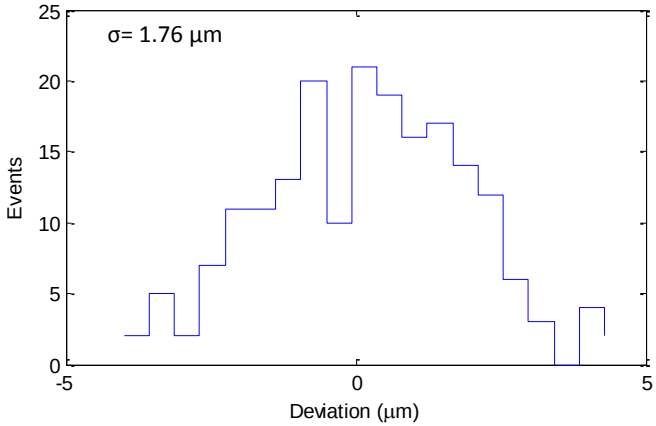

Optical cross-checking of positions of tracks by interferometry at ALBA optics lab (J. Nicolàs)

Histogram of the position error distribution of the coil fiducials.

Improving rotating coil bench

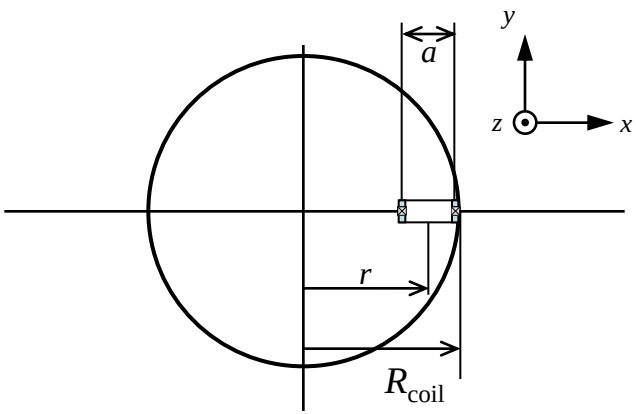

A rotating coil with a physical radius R_{coil} is well suited to determine the field harmonics at a reference radius $R_{ref} \leq R_{coil}$.

In the case of having a radial coil with N turns centered at a radius r and with an opening a (therefore $R_{coil} \geq r + a/2$), the contribution of the n-th harmonic to the induced flux is given by:

$$\psi \approx Na\left(\frac{r}{R_{\mathrm{ref}}}\right)^{n-1}(B_n \cos n\theta - A_n \sin n\theta) \qquad (\text{valid if } r \gg \tfrac{a}{2})$$

Therefore if $r \sim R_{coil} < R_{ref}$ the signal generated by a harmonic of a given magnitude $|C_n| = B_n^2 + A_n^2$ decreases drastically when the harmonic order n increases.

Improving rotating coil bench

We suggest to improve the accuracy in the determination of the high-order field harmonics with a rotating coil with $R_{coil}<R_{ref}$ by performing measurements at different transversal x_0 positions within a range $\Delta x \sim R_{ref}$

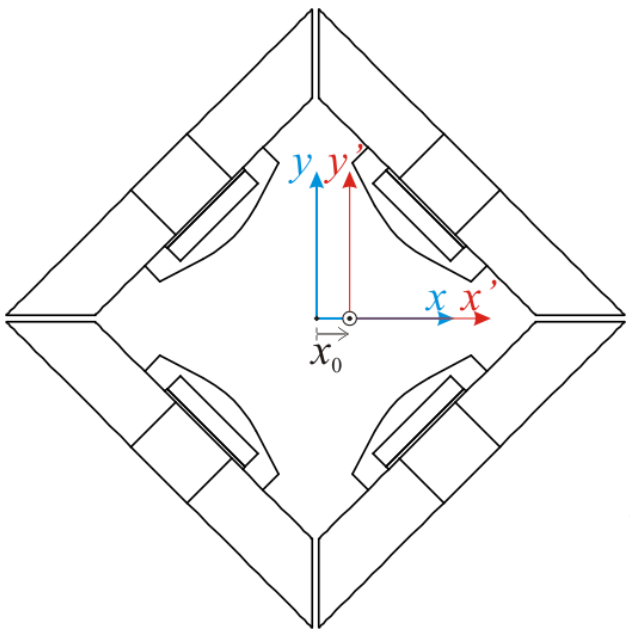

Field harmonics on-axis $C_n(x=0)$

$$(B_y + i\,B_x) = \sum_{n=1}^{\infty} C_n \left(\frac{x + i\,y}{R_{\mathrm{ref}}}\right)^{n-1}$$

Measured field harmonics with the rotating coil placed at x_0, i.e. $C_n'(x_0)$

$$(B_y' + i\,B_x') = \sum_{n=1}^{\infty} C_n' \left(\frac{x' + i\,y'}{R_{\mathrm{ref}}}\right)^{n-1}$$

Taking into account that: $x + i\,y = (x' + x_0) + i\,y'$

The two sets of harmonics C_n and C_n' are related as:
(equivalent to feed-down correction)

$$C_m'(x_0) = \sum_{n=m}^{\infty} \frac{C_n}{{R_{\mathrm{ref}}}^{n-m}} \binom{n-1}{m-1} {x_0}^{n-m}$$

Improving rotating coil bench

The on-axis value of the field harmonics $C_n(x=0)$ can be determined from the horizontal dependence of the measured harmonics $C_n'(x_0)$:

$$C_1'(x_0) = C_1 + C_2\left(\frac{x_0}{R_{ref}}\right) + C_3\left(\frac{x_0}{R_{ref}}\right)^2 + C_4\left(\frac{x_0}{R_{ref}}\right)^3 + C_5\left(\frac{x_0}{R_{ref}}\right)^4 + \cdots$$

$$C_2'(x_0) = C_2 + 2C_3\left(\frac{x_0}{R_{ref}}\right) + 3C_4\left(\frac{x_0}{R_{ref}}\right)^2 + 4C_5\left(\frac{x_0}{R_{ref}}\right)^3 + \cdots$$

$$C_3'(x_0) = C_3 + 3C_4\left(\frac{x_0}{R_{ref}}\right) + 6C_5\left(\frac{x_0}{R_{ref}}\right)^2 + \cdots$$

$$C_4'(x_0) = C_4 + 4C_5\left(\frac{x_0}{R_{ref}}\right) + \cdots$$

$$\vdots$$

The coefficients $C_n(x=0)$ are obtained from a **simultaneous linear regression** of **all** the measured $C_n'(x_0)$ data.

Problem → the monomials $(x_0/R_{ref})^n$ do **not** constitute an **orthogonal set** of basis functions and hence the obtained $C_n(x=0)$ values will depend on:

- The highest considered order n_{max}.
- The analyzed horizontal range Δx

Improving rotating coil bench

Harmonics obtained with the described method (***fit***) compared with a ***reference*** measurement and a single ***on-axis*** measurement with the same ∅ 21mm coil.

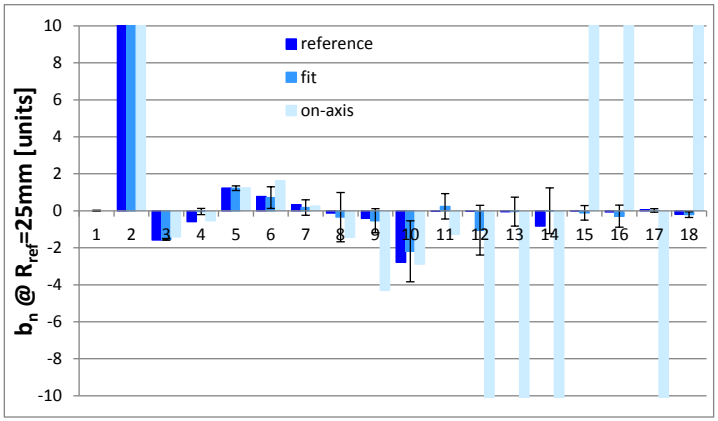

Transversal dependence of the main harmonic obtained from the reference measurement, a single on-axis measurement, and the x-scan measurement

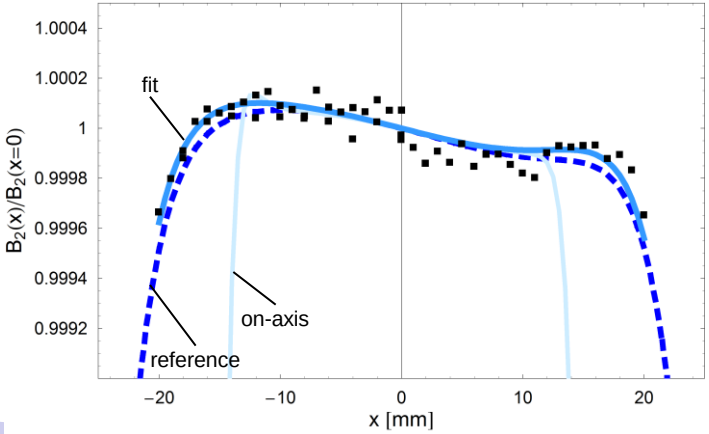

In order to overcome this difficulty, **the analysis is carried out for different values of (n_{max}, Δ*x*).** Those configurations leading to a structure of high-order harmonics with an overall smaller *rms* value are retained, and the $C_n(x=0)$ values are obtained averaging over the retained configurations. **This method also provides an estimation of the error of the obtained coefficients**.

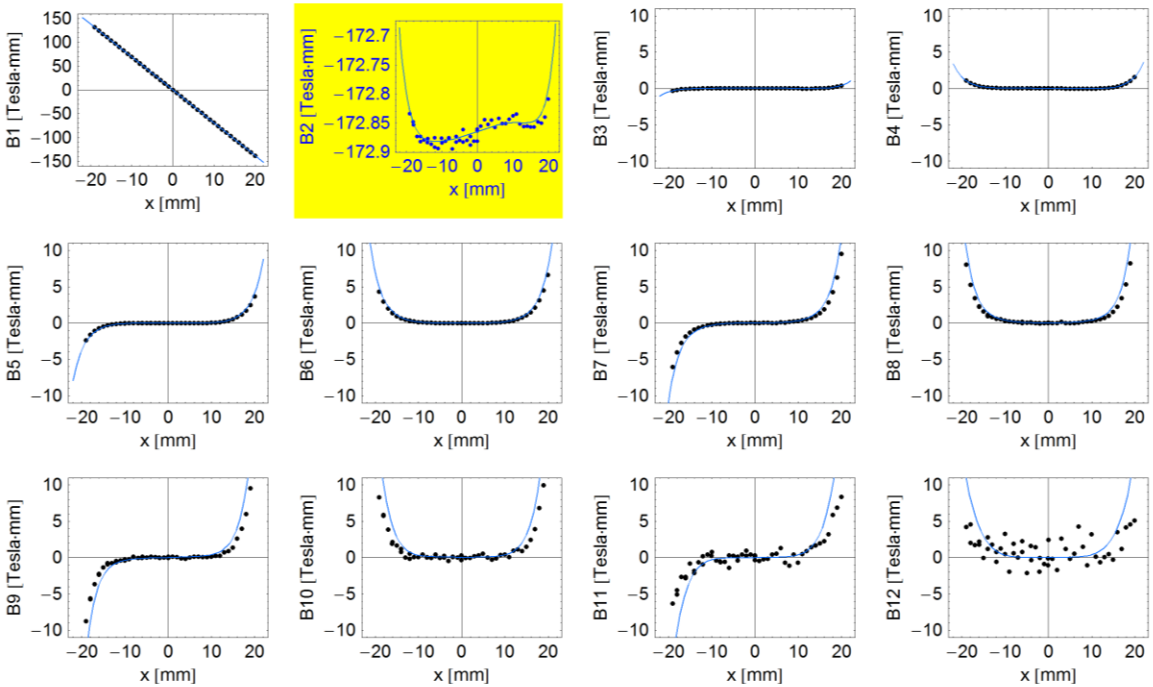

Harmonics @ R_{ref}=25mm measured with a radial coil with a radius of 10.35mm (shaft diameter ∅ 21mm) on a ALBA SR **quadrupole**. Symbols stand for the measured values at different horizontal *x* positions, and continuous lines stand for the $C_n'(x)$ dependencies obtained from the fitted the $C_n(x=0)$ coefficients.

Improving rotating coil bench

The method of performing measurements at different *x* values applied to a quadrupole magnet **can be used to characterize the geometrical parameters of the rotating coil itself** (**coil calibration**)

Radial coil to measure quadrupoles
(based on CERN configuration)

Design (ideal) parameters

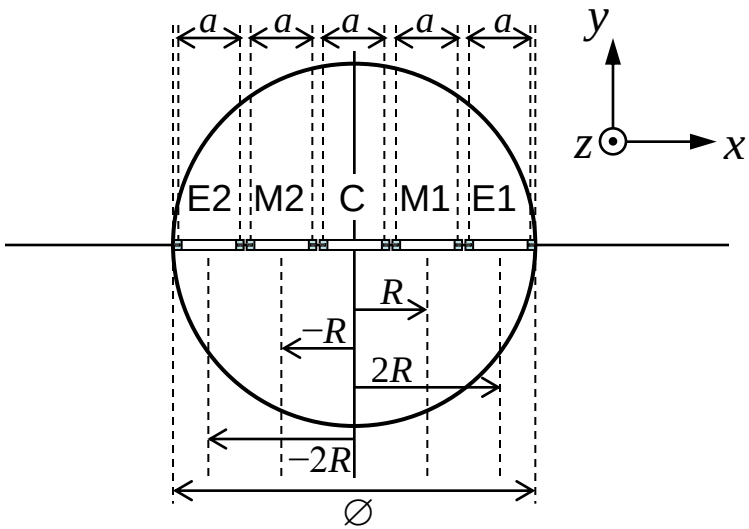

Real parameters

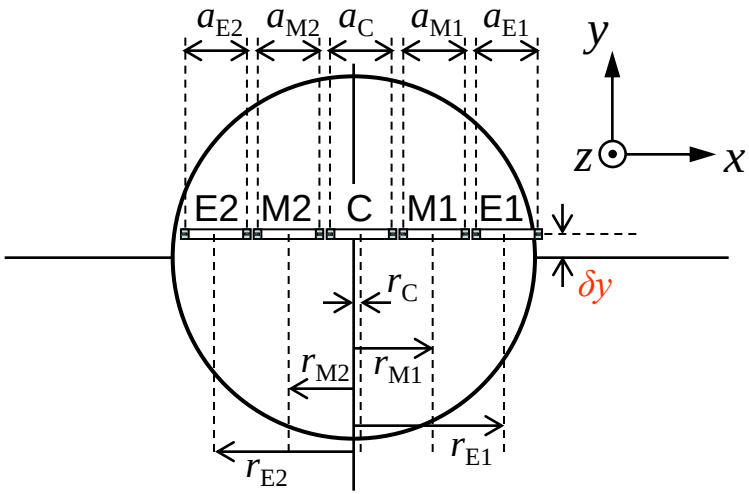

Sensitivity to dipolar and quadrupolar terms

$$(\kappa_1^{ideal})_i = Nl\,a$$
$$(\kappa_2^{ideal})_i = Nl\,a\,2r_i^{ideal}$$

$$(\kappa_1)_i = Nl\,a_i$$
$$(\kappa_2)_i = Nl\,a_i\;2(r_i + \mathrm{i}\,\delta y)$$

where i = E1, M1, C, M2, E2
and $(r_{E1}^{ideal}, r_{M1}^{ideal}, r_C^{ideal}, r_{M2}^{ideal}, r_{E2}^{ideal}) = (2R, R, 0, -R, -2R)$

Improving rotating coil bench

The harmonics obtained assuming the **ideal parameters** of the coil C_n^{ideal} and the correct harmonics C_n that would be obtained using the **real parameters** are related as:

$$C_1\ \kappa_1 = C_1^{ideal}\ \kappa_1^{ideal} \Rightarrow C_1 = C_1^{ideal}\frac{a}{a_i}$$

$$C_2\ \kappa_2 = C_2^{ideal}\ \kappa_2^{ideal} \Rightarrow C_2 = C_2^{ideal}\frac{a\ r_i^{ideal}}{a_i(r_i + \mathrm{i}\ \delta y)}$$

If, in addition, when the rotating encoder is at its starting position the coil is tilted by an (unknown) θ_0 angle it can be proved that the dipolar and quadrolar term are related as:

$$\frac{dC_1(x)}{dx} = \frac{1}{R_{ref}} C_2(x=0)\ e^{-i\theta_0}$$ (neglecting feed-down corrections from C_n terms with n>2)

The same expression applied to the harmonics obtained assuming the ideal parameters reads:

$$\frac{dC_1^{ideal}(x)}{dx} = \frac{1}{R_{ref}} \frac{r_i^{ideal}}{(r_i + \mathrm{i}\ \delta y)} C_2^{ideal}\ e^{-i\theta_0}$$

$$\frac{dB_1^{ideal}(x)}{dx} = \frac{1}{R_{ref}} \frac{r_i^{ideal}}{(r_i^2 + \delta y^2)} \left[\left(r_i B_2^{ideal} + \delta y\ A_2^{ideal}\right)\cos\theta_0 + \left(r_i A_2^{ideal} - \delta y\ B_2^{ideal}\right)\sin\theta_0\right]$$

$$\frac{dA_1^{ideal}(x)}{dx} = \frac{1}{R_{ref}} \frac{r_i^{ideal}}{(r_i^2 + \delta y^2)} \left[-\left(r_i B_2^{ideal} + \delta y\ A_2^{ideal}\right)\sin\theta_0 + \left(r_i A_2^{ideal} - \delta y\ B_2^{ideal}\right)\cos\theta_0\right]$$

Improving rotating coil bench

$$\frac{dB_1^{ideal}(x)}{dx} = \frac{1}{R_{ref}} \frac{r_i^{ideal}}{(r_i^2 + \delta y^2)} \left[\left(r_i B_2^{ideal} + \delta y \, A_2^{ideal} \right) \cos\theta_0 + \left(r_i A_2^{ideal} - \delta y \, B_2^{ideal} \right) \sin\theta_0 \right]$$

$$\frac{dA_1^{ideal}(x)}{dx} = \frac{1}{R_{ref}} \frac{r_i^{ideal}}{(r_i^2 + \delta y^2)} \left[-\left(r_i B_2^{ideal} + \delta y \, A_2^{ideal} \right) \sin\theta_0 + \left(r_i A_2^{ideal} - \delta y \, B_2^{ideal} \right) \cos\theta_0 \right]$$

If a quadrupole magnet is measured at different *x* positions with each one of the individual coils (*i*=E1, M1, C, M2, E2), the **center of the coils** r_i, the **vertical offset** of the plane of the coils with respect to the rotation axis δy, and the **starting angle** of the coil θ_0 can be deduced.

The width of each coil a_i can not be obtained from this kind of measurement (the a_i parameters do not appear in previous equation). A measurement of a **reference magnet** is required for that.

Example: PCB rotating coil @ALBA

Nominal parameters:

$N = 19 \times 9 \times 2 = 342$ turns

$a = 2.3\text{mm}$

$R = 4.6\text{mm}$

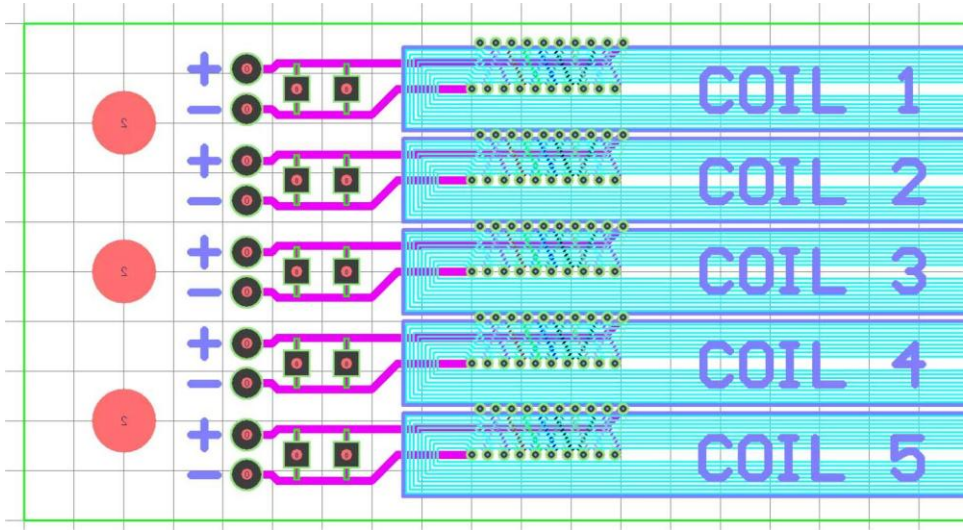

Improving rotating coil bench

Example: one PCB rotating coil @ALBA. Comparison of fitted parameters with nominal ones

- Coil positions determined using the described method applied to a quadrupole
- Coil areas determined by comparison to a reference measurement of the same quadrupole

Coil positions:

$$(r_{E1}, r_{M1}, r_C, r_{M2}, r_{E2}) = (+9.278, +4.684, +0.092, -4.501, -9.093)\text{mm}$$

Determination method estimated error: $\boxed{\delta r = \pm 2\mu\text{m}}$ → In agreement with optical measurements

Average distance between adjacent coils: $R = (4.593 \pm 0.0005)\text{mm}$ (nominal 4.6mm)

Horizontal offset wrt rotation axis: $\delta x = (0.092 \pm 0.0005)\text{mm}$

Vertical offset wrt rotation axis: $\delta y = (-0.263 \pm 0.002)\text{mm}$

Coil areas:

$$(a_{E1}, a_{M1}, a_C, a_{M2}, a_{E2}) = (2.262, 2.284, 2.260, 2.269, 2.279)\text{mm}$$

Determination method estimated error: $\delta a = \pm 5\mu\text{m}$

Average coil area: $a = (2.270 \pm 10)\text{mm}$ (nominal 2.30mm)

Improvement of ancillary equipment: Enertron PS upgrade

In order to measure SESAME combined magnets in 2014-2015, we need to adapt our old PS for bendings

Current configuration

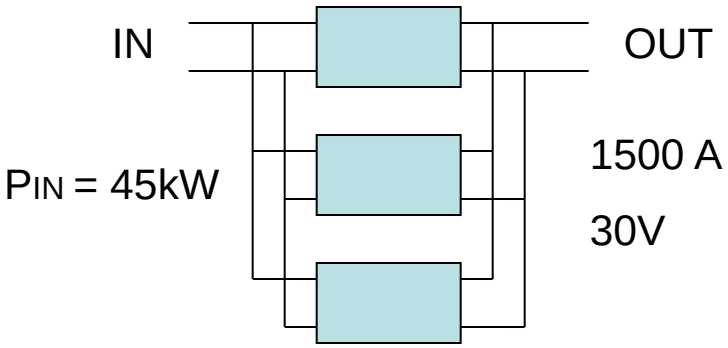

New configuration

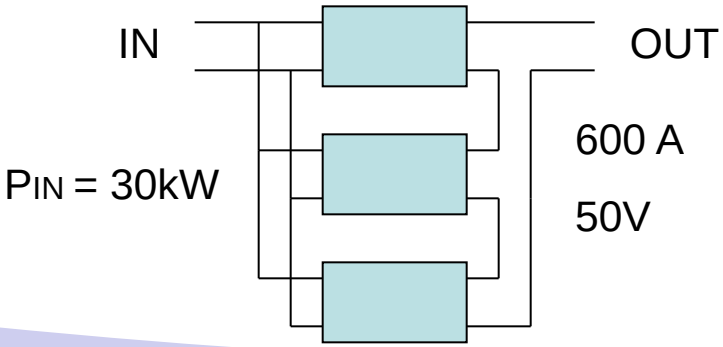

The power supply consists of 3 modules operating in parallel. The proposal is to **operate the modules in series** connection and **improve the switching** in order to restore the original power capability.

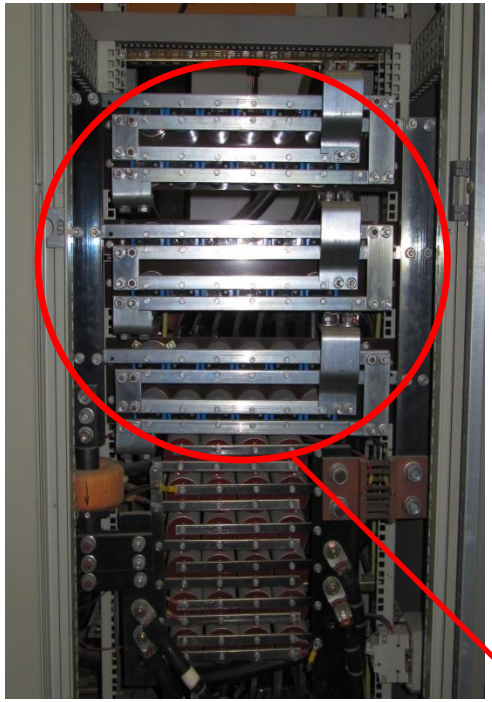

Power bars to be modified

Modifications

- Upgrade of IGBT driver to improve switching.
- Replacement of IGBT to lower switching losses.
- Re-design of the output power connections.
- Adding a DCCT for better performance.
- Replacement of PWM control (Tango)

Improving calibration

Cross checking of different benches

- Comparison of Hall probe wrt rotating coil

Cross-checking

We measured the harmonic content of a quadrupole magnet using our rotating coil bench

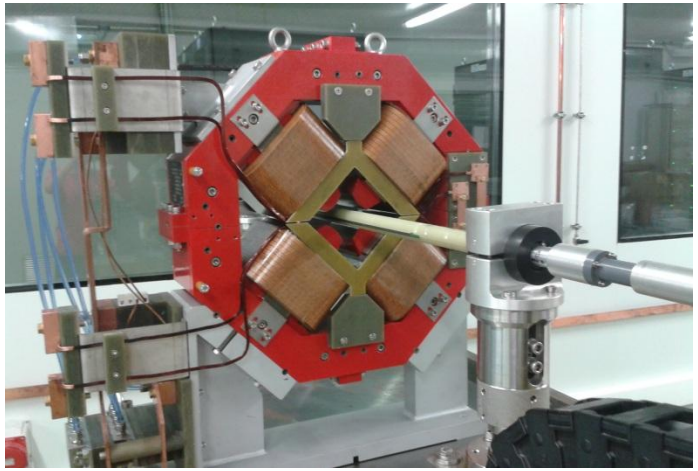

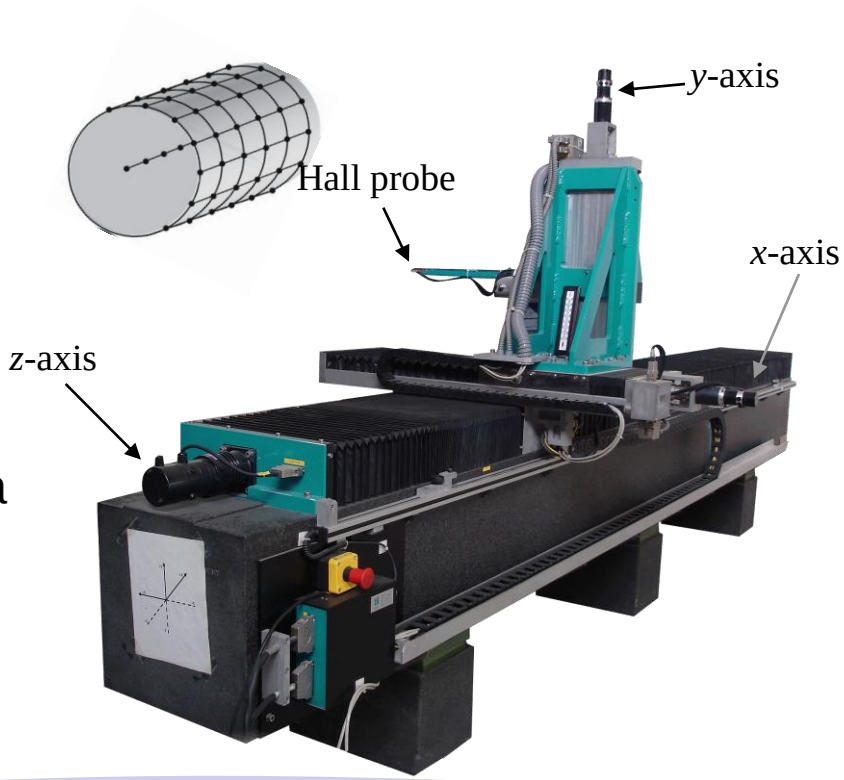

Also, using the Hall probe bench, we measured the magnetic field in a grid definig a cilinder inside the quadrupole.

The radius of this cilyndrical grid is the same as the reference radius.

Cross-checking

Determination of integrated multipoles with Hall probe bench

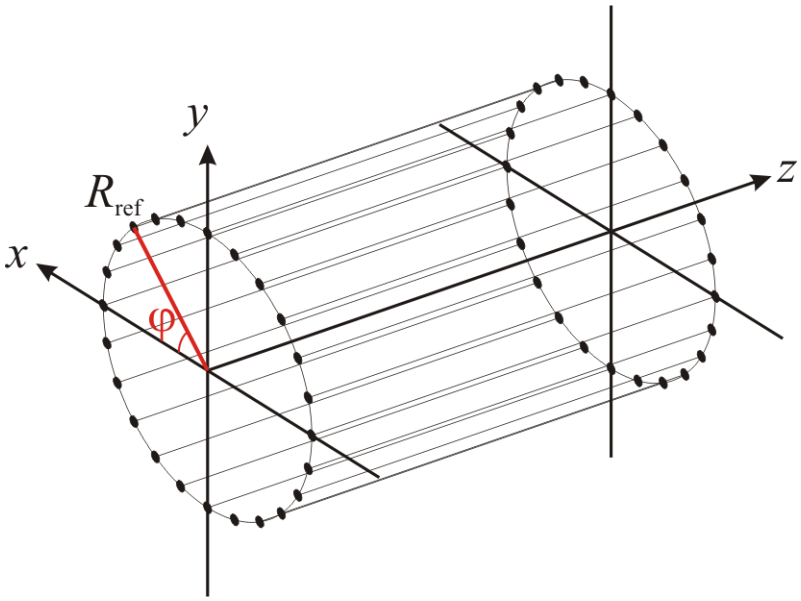

Magnetic field scanned along a series of $P=2^p$ (typically 128) longitudinal lines uniformly distributed along a cylinder of radius R_{ref}

The *x* and *y* components of the magnetic field are integrated:

$$I_x(R_{ref},\varphi) = \int_{z_{min}}^{z_{max}} B_x(z)\, dz$$

$$I_y(R_{ref},\varphi) = \int_{z_{min}}^{z_{max}} B_y(z)\, dz$$

And the radial and azimuthal components of the field integrals are obtained as:

$$I_r(R_{ref},\varphi) = +I_x \cos\varphi + I_y \sin\varphi$$

$$I_\varphi(R_{ref},\varphi) = -I_x \sin\varphi + I_y \cos\varphi$$

Taking into account that: $(I_y + i\, I_x) = \sum_{n=1}^{\infty} C_n \left(\frac{z}{R_{ref}}\right)^{n-1}$ and $(I_y + i\, I_x) = (I_\varphi + i\, I_r) e^{-i\,\varphi}$

then $(I_\varphi + i\, I_r) = \sum_{n=1}^{\infty} C_n \left(\frac{z}{R_{ref}}\right)^{n-1} e^{i\,\varphi}$

and evaluated at $z = R_{ref}\, e^{i\,\varphi}$ we obtain:

$$(I_\varphi + i\, I_r) = \sum_{n=1}^{\infty} C_n e^{i\,n\,\varphi}$$

Therefore the integrated harmonics can be obtained from the Fourier components of either I_r or I_φ defined as:

$$\left(\widetilde{I_\varphi}\right)_n = \frac{1}{\sqrt{P}} \sum_{s=1}^{P} I_\varphi(\varphi_s) e^{-i2\pi(s-1)(n-1)/P}$$

$$\left(\widetilde{I_r}\right)_n = \frac{1}{\sqrt{P}} \sum_{s=1}^{P} I_r(\varphi_s) e^{-i2\pi(s-1)(n-1)/P}$$

i.e.

$$C_n = \frac{2}{\sqrt{P}} \left(\widetilde{I_\varphi}\right)_n$$

$$C_n = i\frac{2}{\sqrt{P}} \left(\widetilde{I_r}\right)_n$$

The difference between the harmonics obtained using the two components (radial and azimuthal) of the integrated field can be used as an estimation of the error.

Cross-checking

In general, the agreement is fair.

This result is a validation of the accuracy of both benches

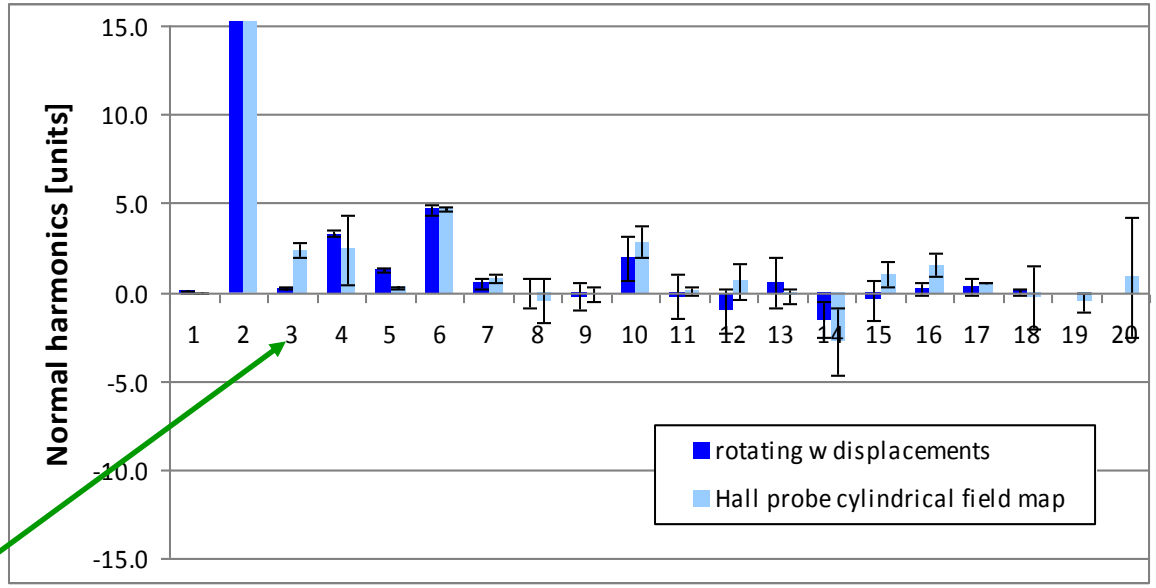

Note: we found a systematic difference in the harmonic next to the main. We are currently trying to understand the origin of this difference.

	Rotating	Hall probe
angle [mrad]	1.9	7.3
delta X [um]	-207.6	-152.6
delta Y [um]	483.5	474.2
B2@21mm [Tesla*m]	0.072052	0.073523
Integrated Quadrupole [Tesla]	3.4311	3.5011

Summary

- **Measurements:**

Measurements of multipole magnets
Measurement of phase-shifter for E-XFEL
-> **COMBINATION OF DIFFERENT TECHNIQUES**

Improvements:

-> CALIBRATION OF HALL PROBES (displacements)
-> MEASUREMENTS WITH ROTATING COIL + X DISPLACEMENTS
-> CALIBRATION OF ROTATING COIL MOLES
-> CROSS-CHECKING HALL AND ROTATING

Thanks for your attention