Center for Frontiers in Nuclear Science

Renaud Boussarie

CFNS postdoc since October 1st 2018

Collaborators: Yoshitaka Hatta and Yacine Mehtar-Tani

Potential collaborators: Björn Schenke and Raju Venugopalan

BROOKHAVEN NATIONAL LABORATORY

QCD at moderate x

$$Q^2 \sim s$$

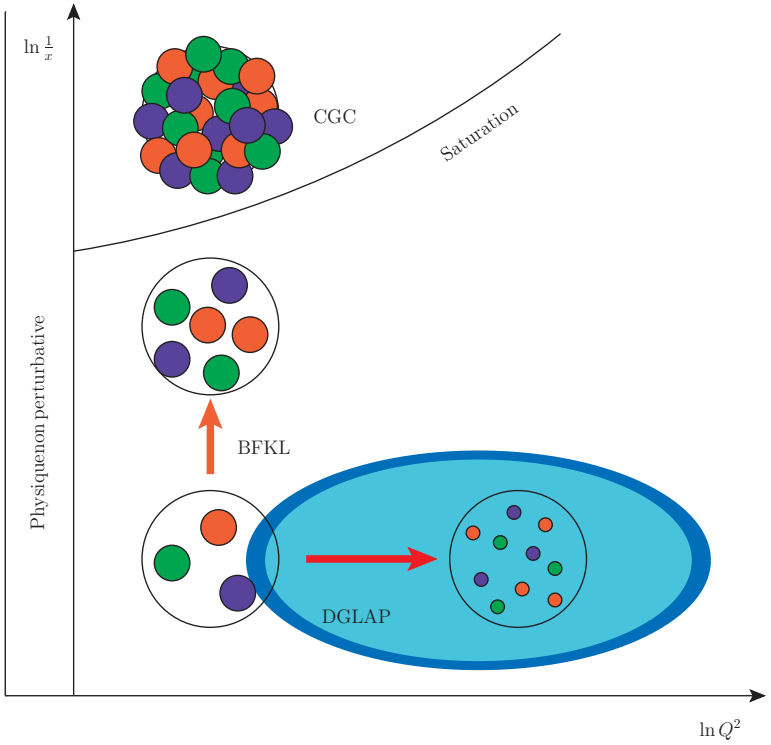

QCD at moderate x: QCD factorization

Factorization into:

- a hard part $\mathcal{H}$ computed with perturbative methods

- a parton distribution $\mathcal{F}$ non-perturbative (constrained by experimental data or estimated with non-perturbative methods, e.g. lattice QCD)

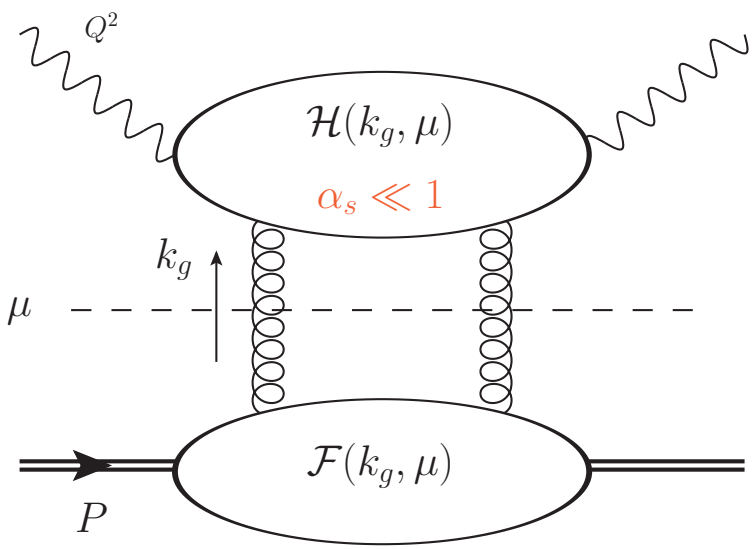

- Twist expansion
  $\sigma = \sigma_0 + \frac{1}{Q}\sigma_1 + ...$
- Resummation of logarithms
  $\sigma_0 = \sum_n \left[A_n(\alpha_s \ln Q^2)^n + \alpha_s B_n(\alpha_s \ln Q^2)^n ...\right]$
- Cancellation of divergences ⇔ Renormalization of the parton distribution $\mathcal{F}$

  E.g.: Dokshitzer-Gribov-Lipatov-Altarelli-Parisi (DGLAP) evolution for a Parton Distribution Function

Operator definition for parton distributions

Parton distribution function

$$\mathcal{F}(x) \propto \int dz^+ e^{ixP^- z^+} \left\langle P \left| F^{-i}(z^+) \left[z^+, 0^+\right] F^{-i}(0) \left[0^+, z^+\right] \right| P \right\rangle$$

Transverse Momentum Dependent distribution

$$\mathcal{F}(x, k_\perp) \propto \int d^4 z \delta(z^-) e^{ixP^- z^+ + i(k_\perp \cdot z_\perp)} \left\langle P \left| F^{-i}(z) \mathcal{U}_{z,0} F^{-i}(0) \mathcal{U}_{0,z} \right| P \right\rangle$$

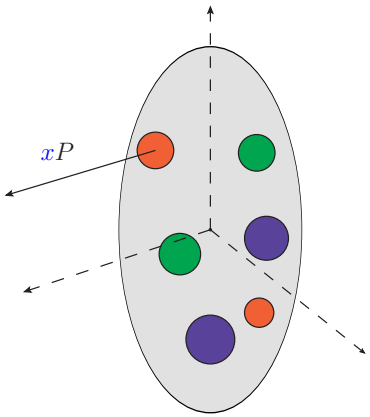

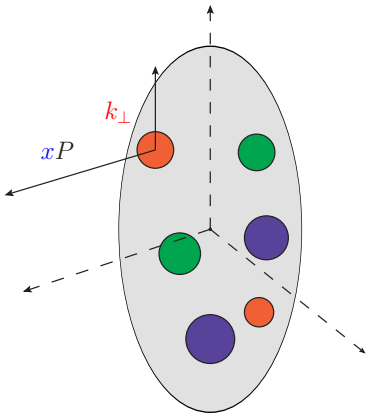

Operator definition for parton distributions

TMD distribution

$$\mathcal{F}(x, k_\perp) \propto \int d^4z\delta(z^-)e^{ixP^-z^+ + i(k_\perp \cdot z_\perp)} \left\langle P \left| F^{-i}(z)\mathcal{U}_{z,0}F^{-i}(0)\mathcal{U}_{0,z} \right| P \right\rangle$$

Generalized TMD distribution

$$\mathcal{F}(x, k_\perp, \Delta) \propto \int d^4z\delta(z^-)e^{ixP^-z^+ + i(k_\perp \cdot z_\perp)} \left\langle P+\Delta \left| F^{-i}(z)\mathcal{U}_{z,0}F^{-i}(0)\mathcal{U}_{0,z} \right| P \right\rangle$$

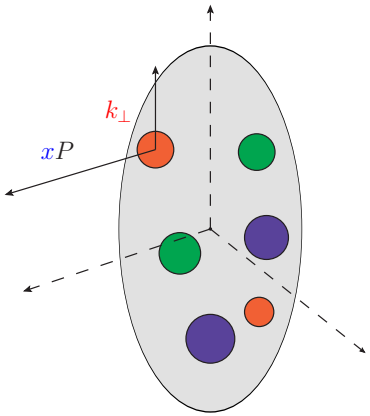

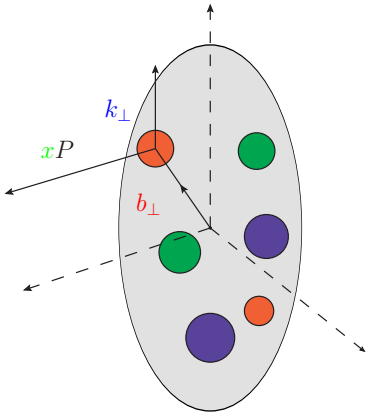

The family tree of parton distributions

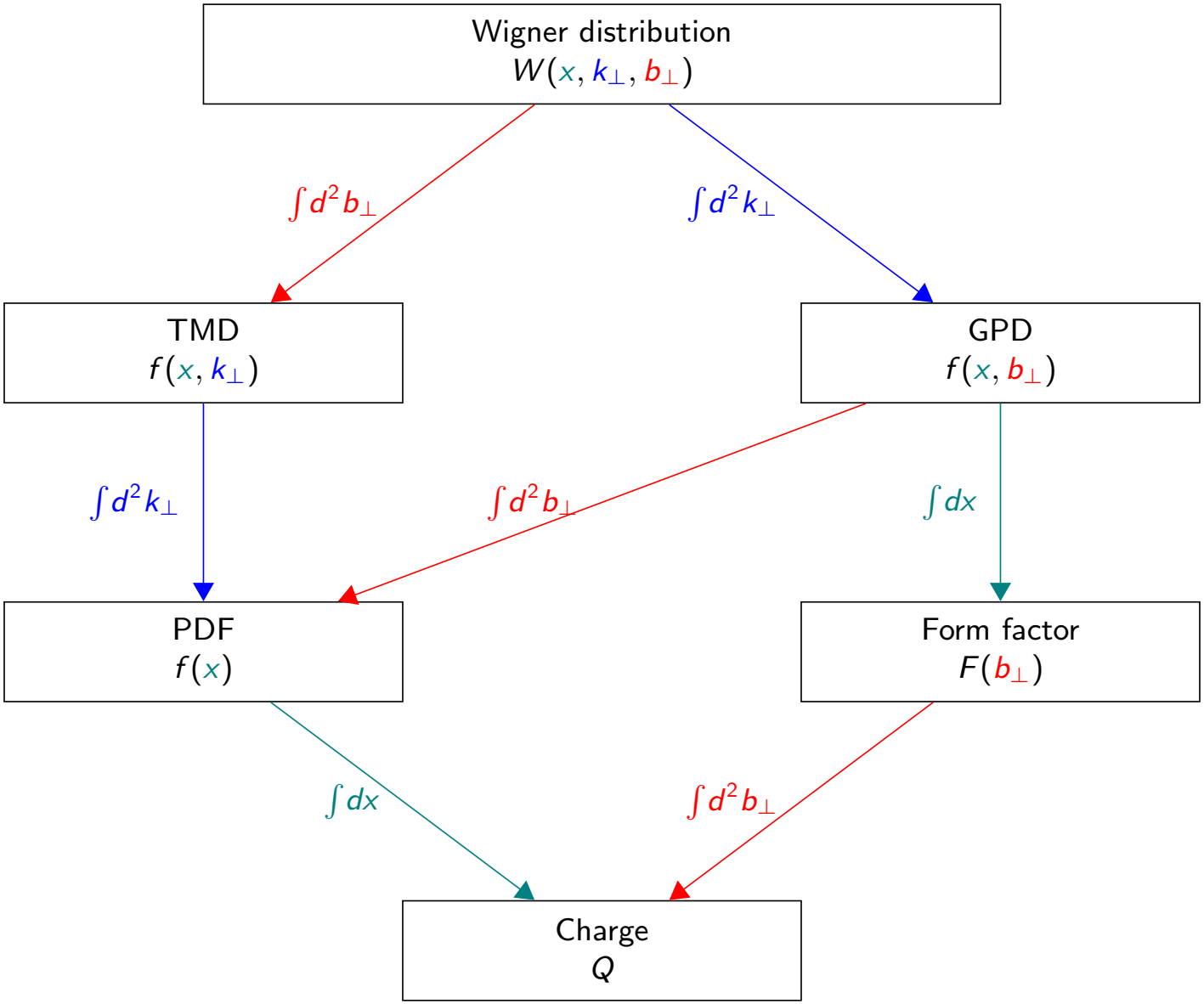

Leading twist gluon TMD distributions

Hadron pol. \ Parton	Unpolarized	Circular	Linear
Unpolarized	f_1^g	$\emptyset$	$h_1^{\perp g}$
Longitudinal	$\emptyset$	g_{1L}^g	$h_{1L}^{\perp g}$
Transverse	$f_{1T}^{\perp g}$	g_{1T}^g	h_1^g, $h_{1T}^{\perp g}$

PDF-spanning

Unpolarized f_1^g

Helicity g_{1L}^g

Naive T-even pure TMDs

Worm-gear $h_{1L}^{\perp g}$, g_{1T}^g

Pretzelosity $h_{1T}^{\perp g}$

Transversity h_1^g

Naive T-odd pure TMDs

Boer-Mulders $h_1^{\perp g}$

Sivers $f_{1T}^{\perp g}$

(So-called) non-universality of TMD distributions:

The importance of gauge links

[Collins, Soper, Sterman], [Brodsky, Hwang, Schmidt], [Belitsky, Ji, Yuan], [Bomhof, Mulders, Pijlman], [Boer, Mulders, Pijlman]

[Kharzeev, Kovchegov, Tuchin]

TMD gauge links

"Non-universality" of quark TMD distributions

Gauge links can be future-pointing or past-pointing

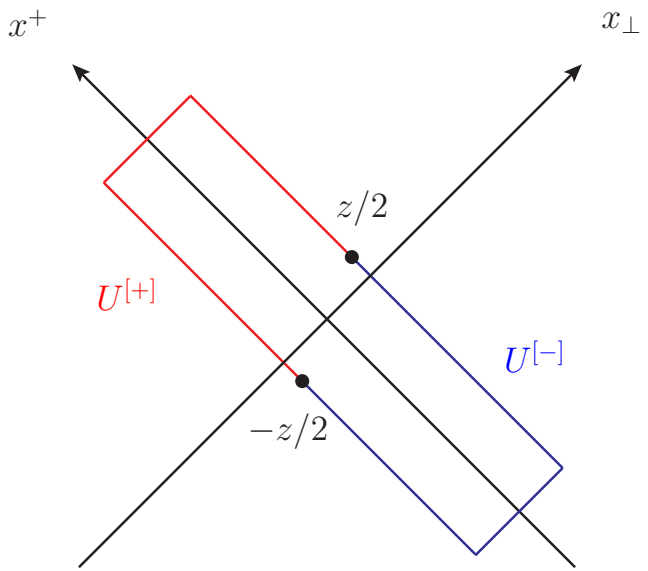

$$q^{[+]}(x,k_\perp) \propto \left\langle P,S \left| \bar{\psi}\left(\frac{z}{2}\right) \mathcal{U}^{[+]}_{\frac{z}{2},-\frac{z}{2}} \psi\left(-\frac{z}{2}\right) \right| P,S \right\rangle$$

$$q^{[-]}(x,k_\perp) \propto \left\langle P,S \left| \bar{\psi}\left(\frac{z}{2}\right) \mathcal{U}^{[-]}_{\frac{z}{2},-\frac{z}{2}} \psi\left(-\frac{z}{2}\right) \right| P,S \right\rangle$$

For naive T-odd distributions, $q^{[+]} = -q^{[-]}$: Sivers effect

The Sivers effect

SIDIS

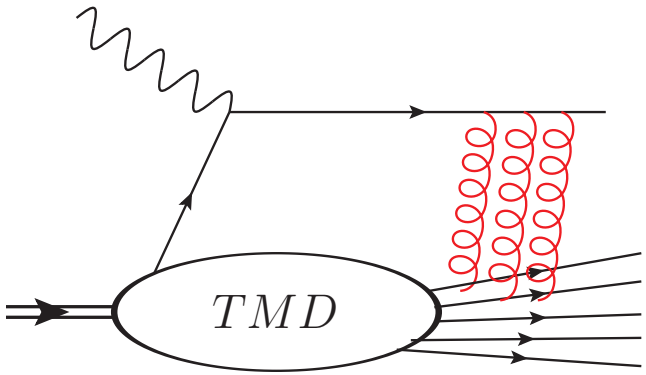

Drell-Yan

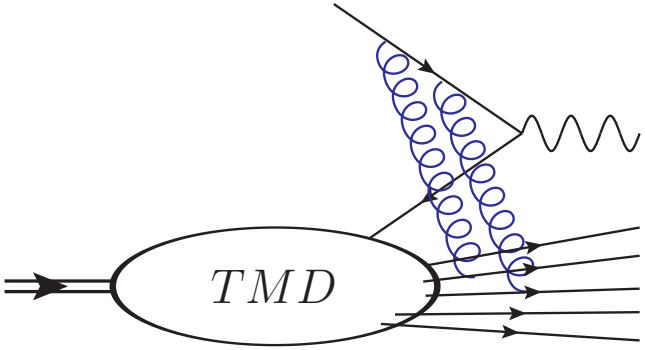

Final state interactions: $q^{[+]}$

Initial state interactions: $q^{[-]}$

The Sivers distribution comes with a relative $-$ sign between SIDIS and DY: different gauge links for a naive T-odd quantity!

TMD gauge links

"Non-universality" of gluon TMD distributions

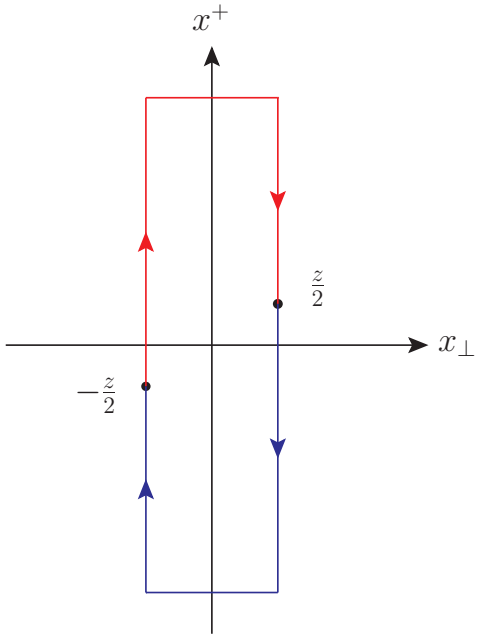

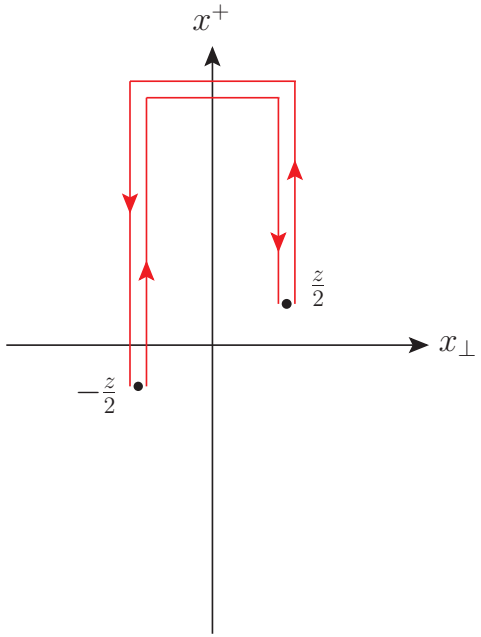

$$\mathrm{Tr}\left[F^{i-}\left(\frac{z}{2}\right)\mathcal{U}^{[-]\dagger}F^{i-}\left(-\frac{z}{2}\right)\mathcal{U}^{[+]}\right] \qquad \mathrm{Tr}\left[F^{i-}\left(\frac{z}{2}\right)\mathcal{U}^{[+]\dagger}F^{i-}\left(-\frac{z}{2}\right)\mathcal{U}^{[+]}\right]$$

Even more possibilities for gluon TMD distributions!

QCD at small x

$$Q^2 \ll s$$

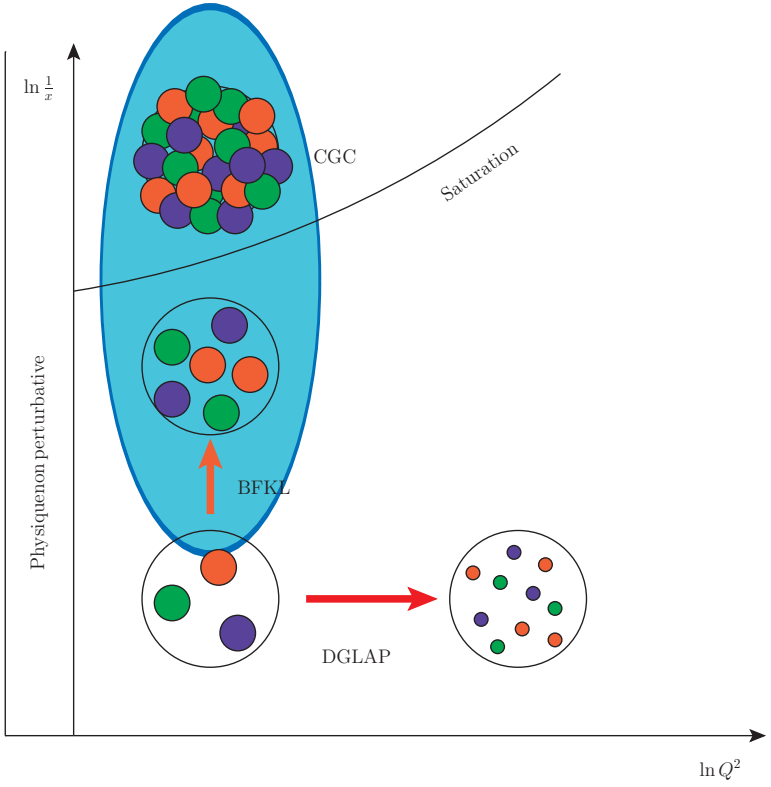

QCD at large s : semi-classical QCD shockwave effective theory

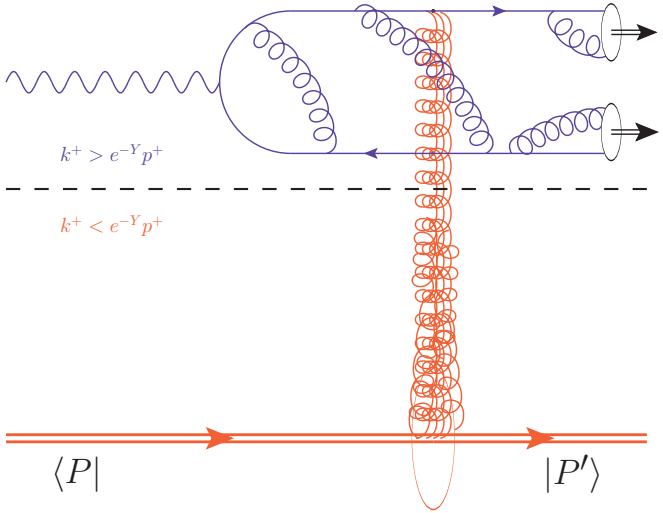

- Eikonal expansion
  $\sigma = \sigma_0 + \frac{1}{s}\sigma_1 + ...$
- Resummation of logarithms
  $\sigma_0 = \sum_n [A_n(\alpha_s \ln s)^n + \alpha_s B_n(\alpha_s \ln s)^n ...]$
- Renormalization group equation:
  Balitsky/Jalilian-Marian-Iancu-McLerran-Weigert-Leonidov-Kovner (B/JIMWLK) evolution for the shockwave operators.

Rapidity separation

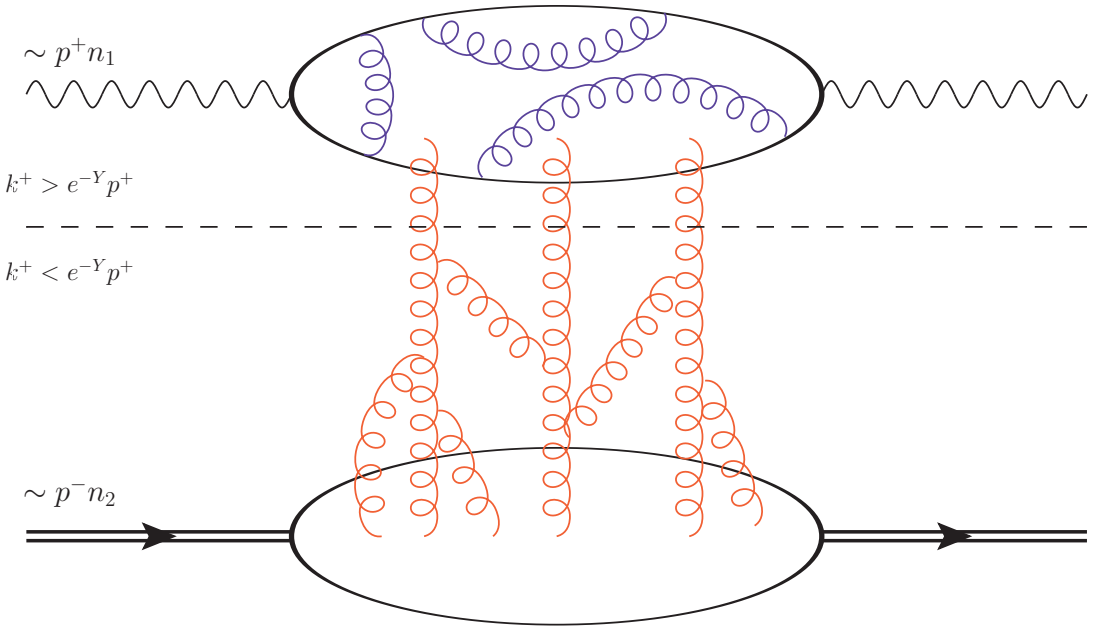

Let us split the gluonic field between "fast" and "slow" gluons

$$\mathcal{A}^{\mu a}(k^+, k^-, \vec{k}) = A^{\mu a}_{Y_c}(|k^+| > e^{-Y_c} p^+, k^-, \vec{k}) + b^{\mu a}_{Y_c}(|k^+| < e^{-Y_c} p^+, k^-, \vec{k})$$

$e^{-Y_c} \ll 1$

Large longitudinal boost to the projectile frame

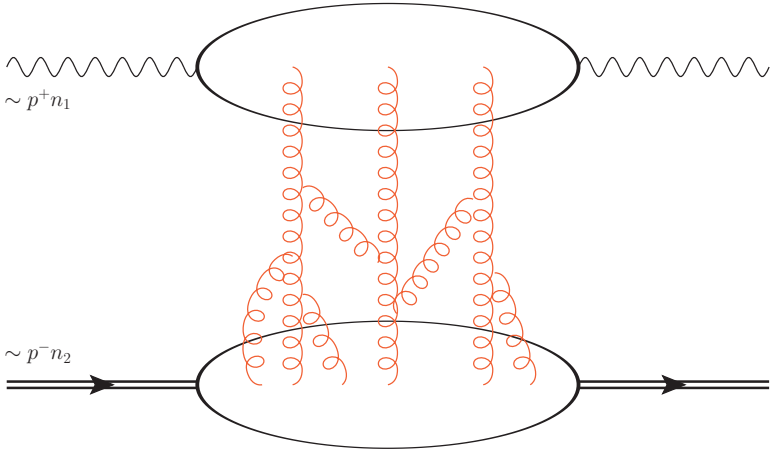

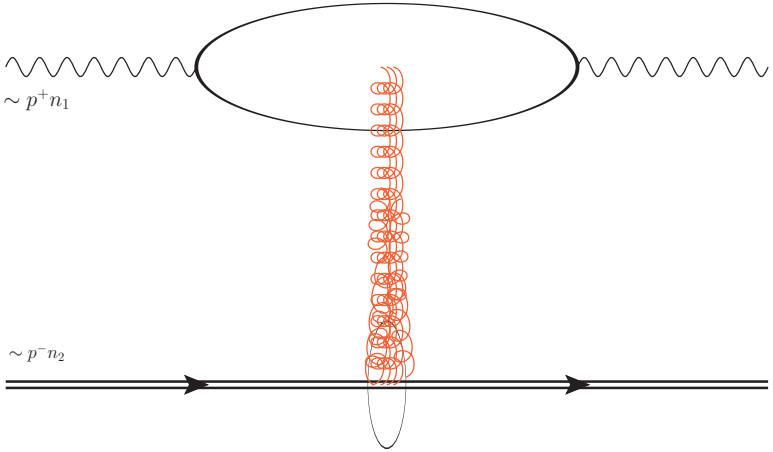

$$b^+(x^+, x^-, \vec{x}) \qquad \longrightarrow \qquad \frac{1}{\Lambda} b^+(\Lambda x^+, \frac{x^-}{\Lambda}, \vec{x})$$

$$b^-(x^+, x^-, \vec{x}) \qquad \longrightarrow \qquad \Lambda b^-(\Lambda x^+, \frac{x^-}{\Lambda}, \vec{x})$$

$$b^k(x^+, x^-, \vec{x}) \qquad \Lambda \sim \sqrt{\frac{s}{m_t^2}} \qquad b^k(\Lambda x^+, \frac{x^-}{\Lambda}, \vec{x})$$

$$b^\mu(x) \to b^-(x)\, n_2^\mu = \delta(x^+)\, \mathbf{B}(\vec{x})\, n_2^\mu + O(\sqrt{\frac{m_t^2}{s}})$$

Shockwave approximation

Effective Feynman rules in the slow background field

The interactions with the background field can be exponentiated

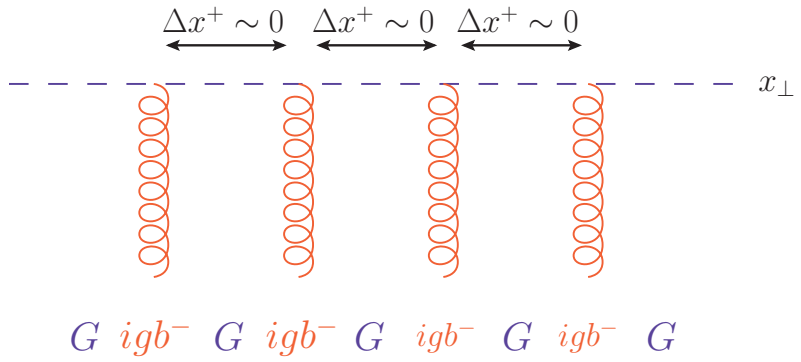

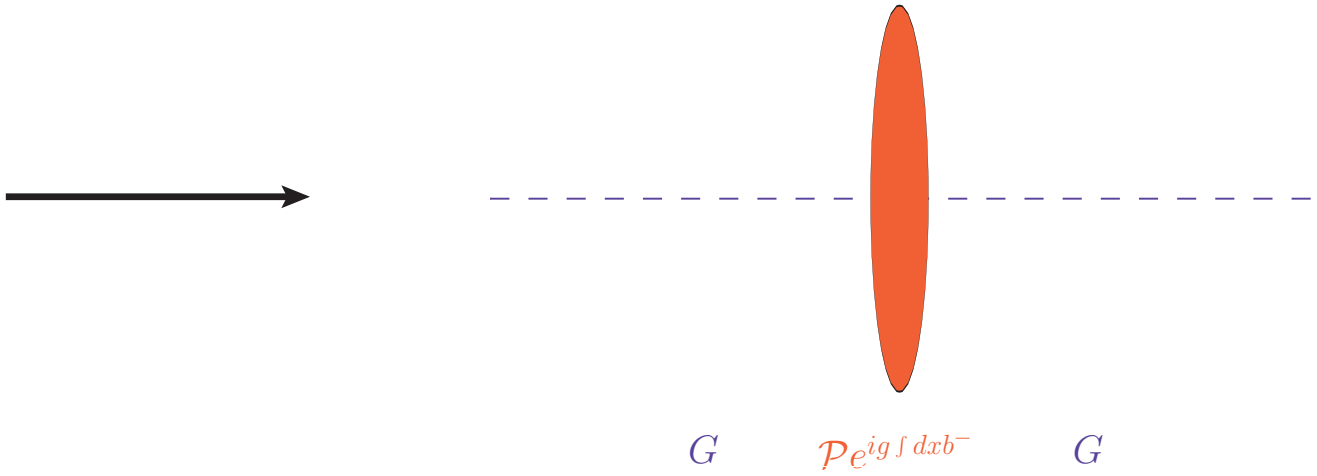

Factorized picture

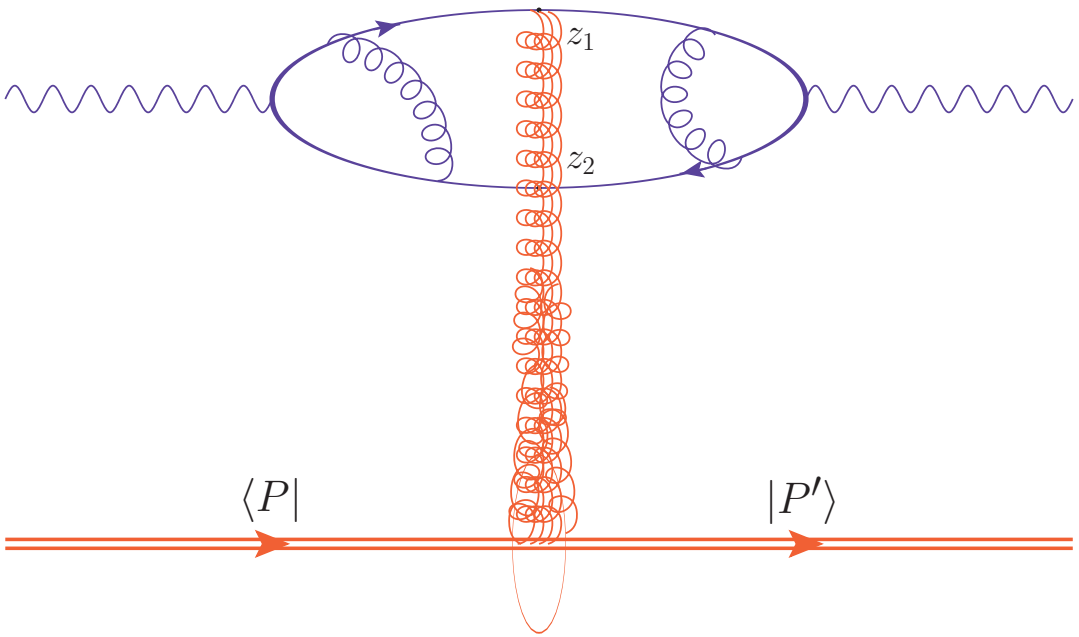

Factorized amplitude

$$\mathcal{A}^{Y_c} = \int d^{D-2}\vec{z}_1 d^{D-2}\vec{z}_2\, \Phi^{Y_c}(\vec{z}_1, \vec{z}_2)\, \langle P'|[\mathrm{Tr}(U^{Y_c}_{\vec{z}_1} U^{Y_c\dagger}_{\vec{z}_2}) - N_c]|P\rangle$$

Dipole operator $\mathcal{U}^{Y_c}_{ij} = \frac{1}{N_c}\mathrm{Tr}(U^{Y_c}_{\vec{z}_i} U^{Y_c\dagger}_{\vec{z}_j}) - 1$

Written similarly for any number of Wilson lines in any color representation!

Y_c independence: B-JIMWLK hierarchy of equations
[Balitsky, Jalilian-Marian, Iancu, McLerran, Weigert, Leonidov, Kovner]

The seemingly incompatible nature of the distributions

Two different kinds of gluon distributions

Moderate x distributions	Low x distributions
GTMD, GPD, TMD, PDF...	Dipole scattering amplitude
$\langle P^{(\prime)} \vert F^{-i} W F^{-j} W \vert P \rangle$	$\langle P^{(\prime)} \vert \mathrm{tr}(U_1 U_2^\dagger) \vert P \rangle$

TMD distributions from QCD shockwaves

From the CGC to a TMD

From Wilson lines...

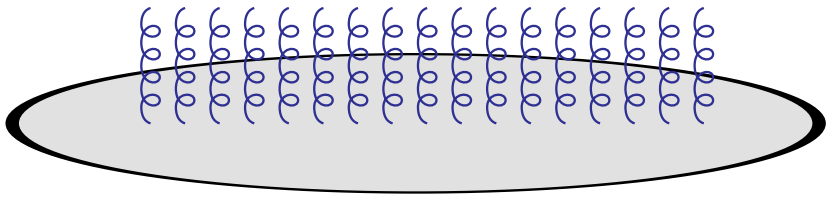

$$\left\langle P \left| \mathrm{Tr}\left(U_{\frac{r}{2}} U^{\dagger}_{-\frac{r}{2}} \right) \right| P \right\rangle$$

To a parton distribution

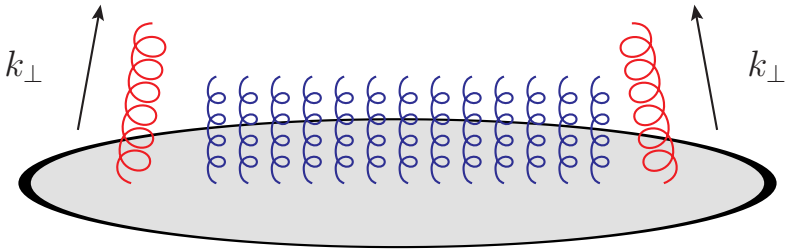

$$\left\langle P \left| \mathrm{Tr}\left(\partial^i U_{\frac{r}{2}} \partial^i U^{\dagger}_{-\frac{r}{2}} \right) \right| P \right\rangle$$

From the CGC to a TMD

Staple gauge links from a Wilson line operator

[Dominguez, Marquet, Xiao, Yuan]

Consider the derivative of a path-ordered Wilson line, denoting

$$[x_1^+, x_2^+]_{\vec{x}} \equiv \mathcal{P} \exp\left[\, ig \int_{x_1^+}^{x_2^+} dx^+ b^-(x^+, \vec{x})\,\right]$$

For a given shockwave operator $U_{\vec{x}} = [-\infty, +\infty]_{\vec{x}}$

$$\partial^i U_{\vec{x}} = ig \int dx^+ [-\infty, x^+]_{\vec{x}} F^{-i}(x^+, \vec{x})\, [x^+, +\infty]_{\vec{x}}$$

$$\partial^j U_{\vec{x}}^\dagger = -ig \int dx^+ [+\infty, x^+]_{\vec{x}} F^{-j}(x^+, \vec{x})\, [x^+, -\infty]_{\vec{x}}$$

$$(\partial^i U_{\vec{x}}^\dagger) U_{\vec{x}} = -ig \int dx^+ [+\infty, x^+]_{\vec{x}} F^{-i}(x^+, \vec{x})\, [x^+, +\infty]_{\vec{x}}$$

Taking the derivative of a shockwave operator allows to extract a physical gluon

From the CGC to a TMD

The dipole TMD

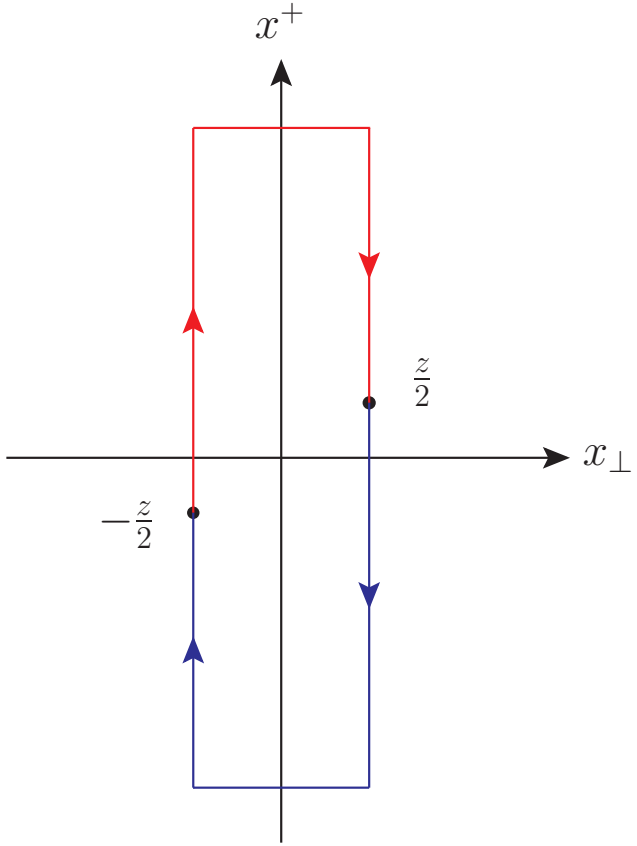

$$\mathcal{F}_{qg}^{(1)}(x,k_\perp) \propto \int d^4z\delta\left(z^+\right) e^{ix(P\cdot z)+i(k_\perp\cdot z_\perp)} \left\langle P \left| \mathrm{Tr}\left[F^{i-}\left(\frac{z}{2}\right)\mathcal{U}^{[-]\dagger}F^{i-}\left(-\frac{z}{2}\right)\mathcal{U}^{[+]}\right]\right| P\right\rangle$$

$$\to \int d^2z_\perp e^{i(k_\perp\cdot z_\perp)} \left\langle P \left| \mathrm{Tr}\left[\left(\partial^i U^\dagger_{\frac{z}{2}}\right)\left(\partial^i U_{-\frac{z}{2}}\right)\right]\right| P\right\rangle$$

From the CGC to a TMD

The Weizsäcker-Williams TMD

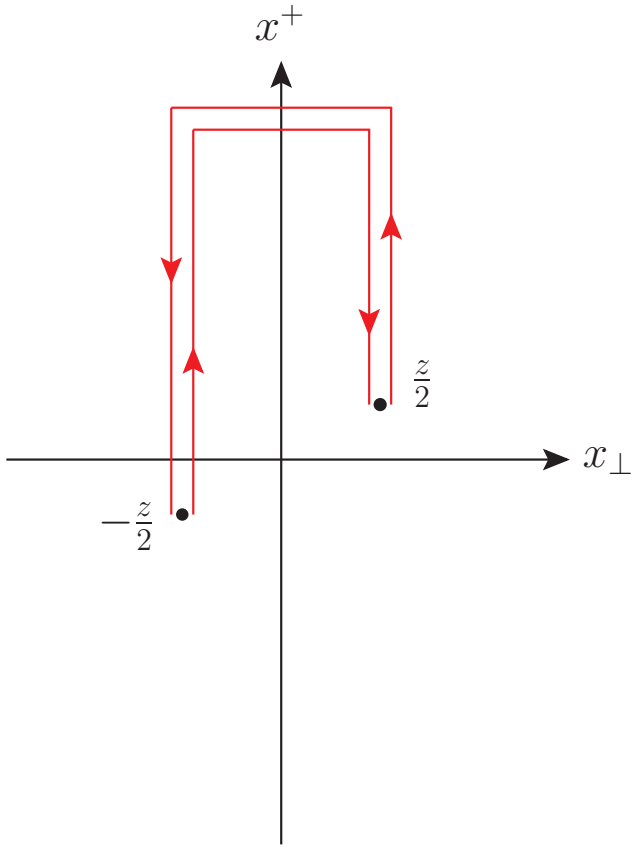

$$\mathcal{F}_{gg}^{(3)}(x,k_\perp) \propto \int d^4z\delta\left(z^+\right) e^{ix(P\cdot z)+i(k_\perp\cdot z_\perp)} \left\langle P \left| \mathrm{Tr}\left[F^{i-}\left(\frac{z}{2}\right)\mathcal{U}^{[+]\dagger}F^{i-}\left(-\frac{z}{2}\right)\mathcal{U}^{[+]}\right]\right| P\right\rangle$$

$$\to \int dz_\perp e^{i(k_\perp\cdot z_\perp)} \left\langle P \left| \mathrm{Tr}\left[\left(\partial^i U_{\frac{z}{2}}\right) U^\dagger_{-\frac{z}{2}} \left(\partial^i U_{-\frac{z}{2}}\right) U^\dagger_{\frac{z}{2}}\right]\right| P\right\rangle$$

Inclusive low x cross section

Inclusive low x cross section = TMD cross section

[Altinoluk, RB, Kotko], [Altinoluk, RB], [RB, Mehtar-Tani]

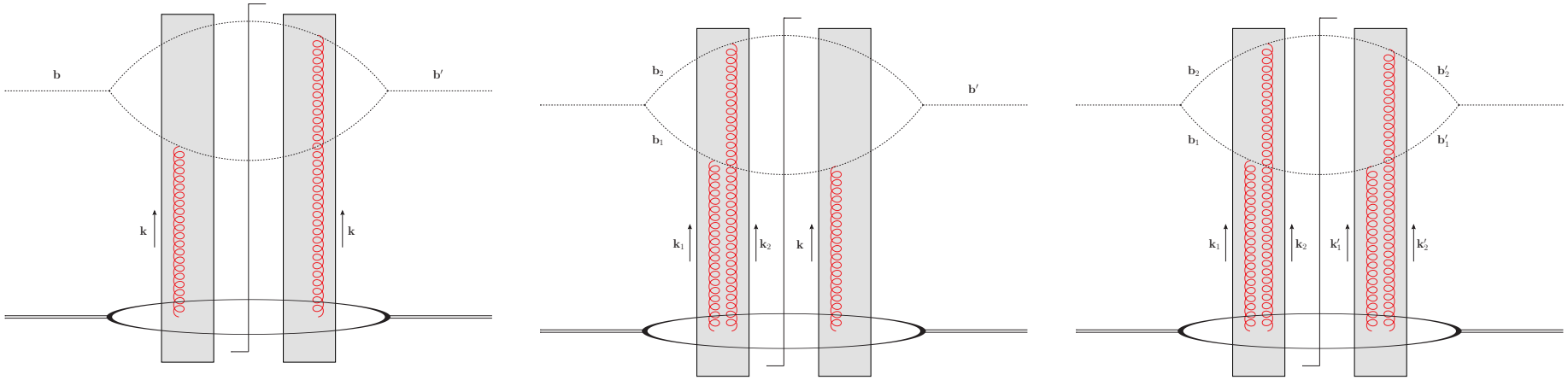

$$\sigma = \mathcal{H}_2^{ij}(k_\perp) \otimes \left\langle P \middle| F^{-i} W F^{-j} W \middle| P \right\rangle$$
$$+ \mathcal{H}_3^{ijk}(k_\perp, k_{1\perp}) \otimes \left\langle P \middle| F^{-i} W g_s F^{-j} W F^{-k} W \middle| P \right\rangle$$
$$+ \mathcal{H}_4^{ijkl}(k_\perp, k_{1\perp}, k'_{1\perp}) \otimes \left\langle P \middle| F^{-i} W g_s F^{-j} W g_s F^{-k} W F^{-l} W \middle| P \right\rangle$$

Exclusive low x cross section

Exclusive low x amplitude = GTMD amplitude

[Altinoluk, RB]

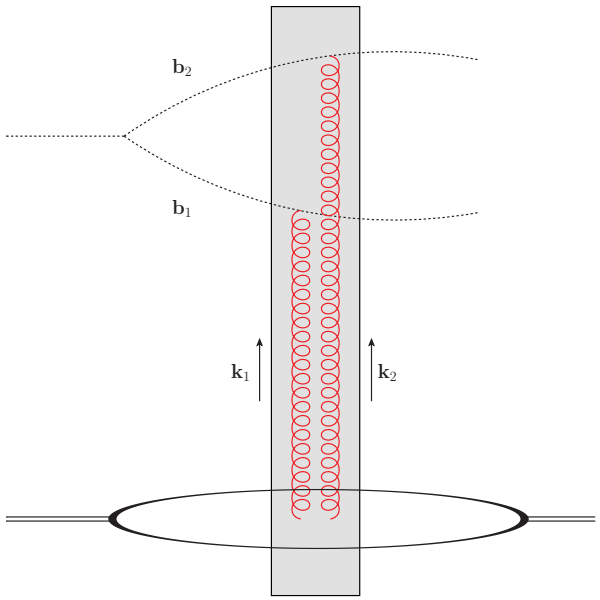

$$\mathcal{H}^{ij}\left(k_{1\perp},\, k_{2\perp}\right) \otimes \left\langle P' \middle| F^{-i} W F^{-j} W \middle| P \right\rangle$$

Every exclusive low x process probes a Wigner distribution!

Dijet electro- or photoproduction

Weizsäcker-Williams TMD

$$T^{R_0} = 1, U^{R_1} = U, U^{R_2} = U^\dagger$$

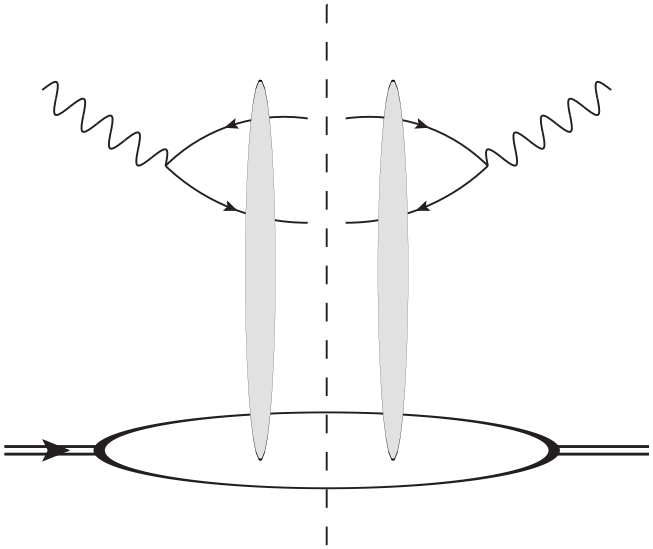

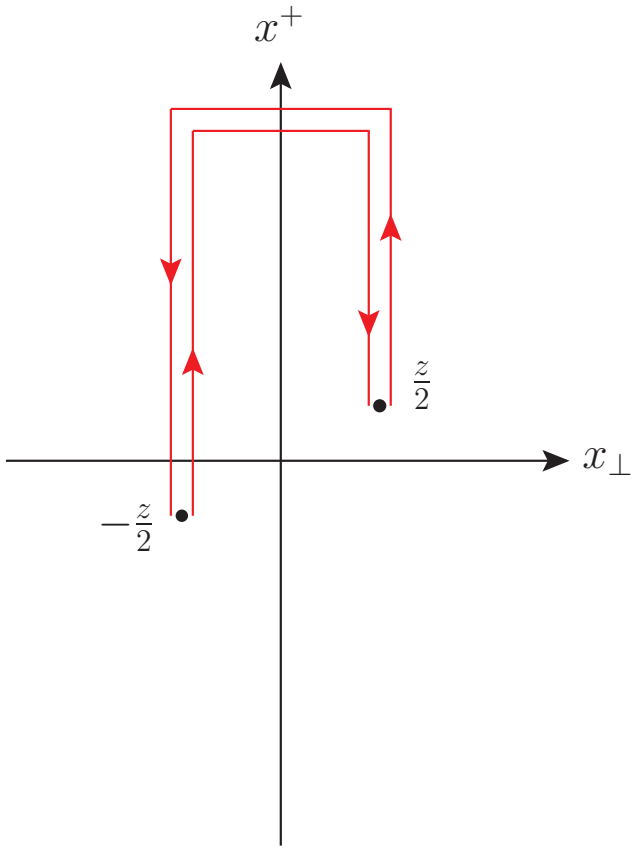

$$\mathcal{F}^{(3)}_{gg}(x \sim 0, k_\perp) \propto \int d^2 z_\perp e^{-i(k_\perp \cdot z_\perp)} \langle P | \mathrm{Tr}(\partial^i U^\dagger_{\frac{z}{2}}) U_{\frac{z}{2}} (\partial^i U^\dagger_{-\frac{z}{2}}) U_{-\frac{z}{2}} | P \rangle$$

Jet+photon production in pA collisions

Dipole TMD

$$T^{R_0} = 1, U^{R_1} = U, U^{R_2} = 1$$

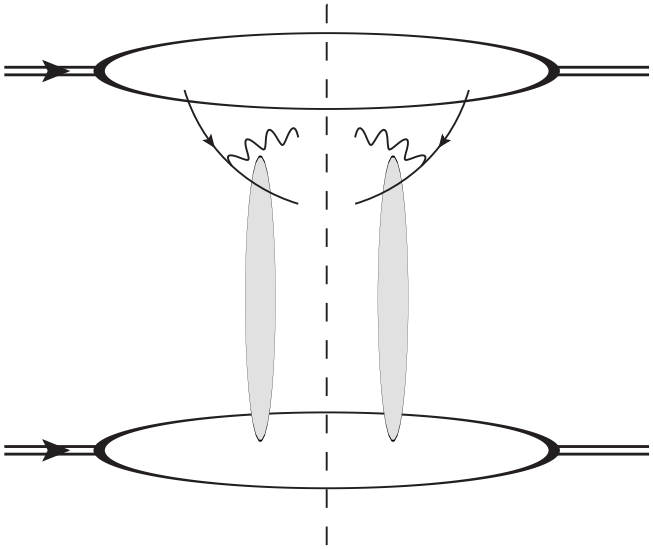

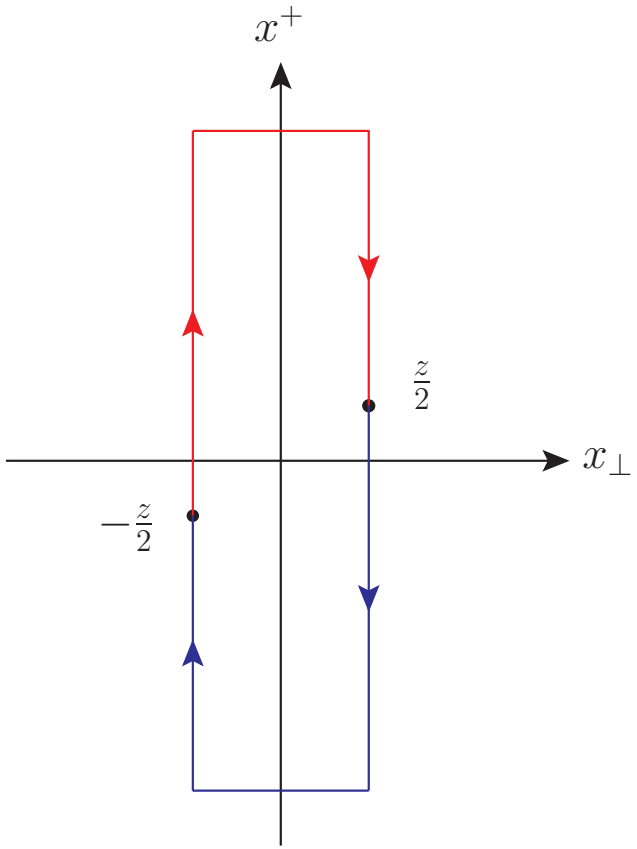

$$\mathcal{F}^{(1)}_{qg}(x \sim 0, k_\perp) \propto \int d^2 z_\perp e^{-i(k_\perp \cdot z_\perp)} \langle P | \mathrm{tr}(\partial^i U_{\frac{z}{2}})(\partial^i U^\dagger_{-\frac{z}{2}}) | P \rangle$$

Forward dijet production in pA collisions

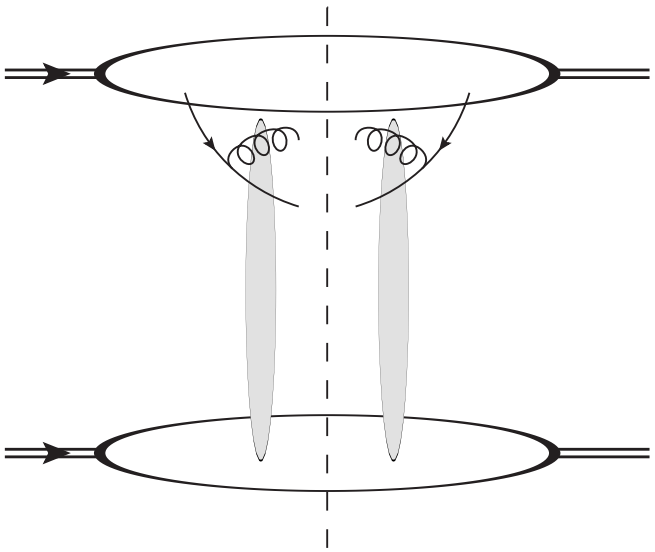

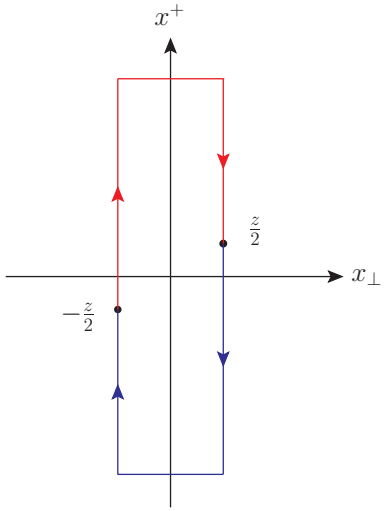

$\mathcal{F}_{qg}^{(1)}$

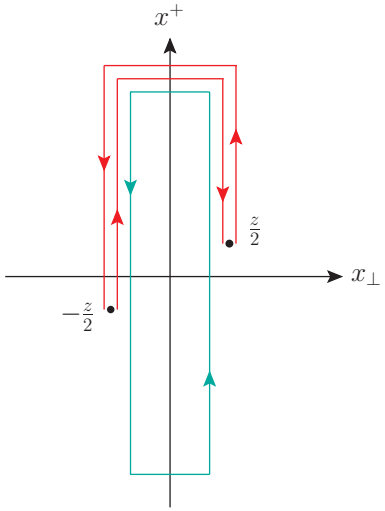

$\mathcal{F}_{qg}^{(2)}$

Forward dijet production in pA collisions

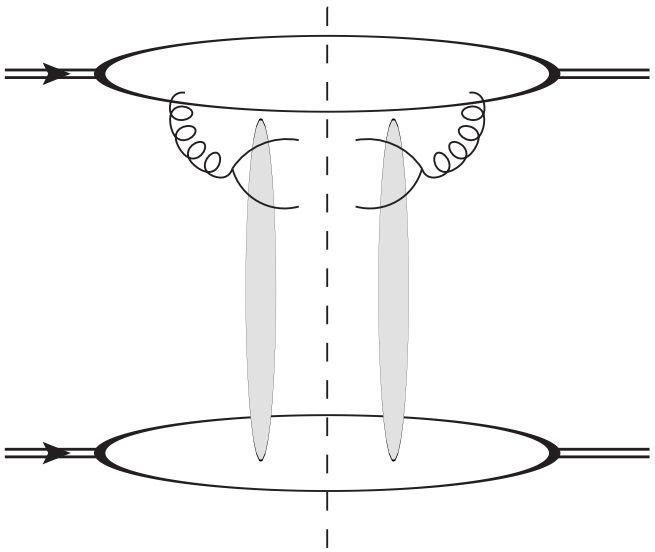

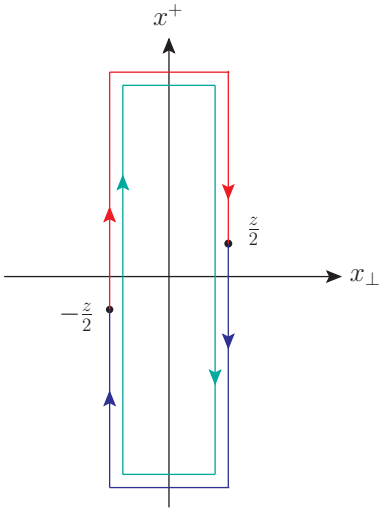

$\mathcal{F}_{gg}^{(1)}$

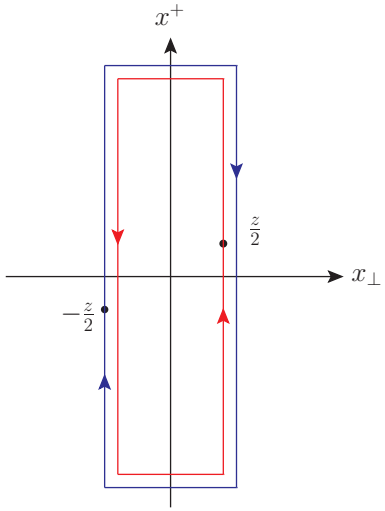

$\mathcal{F}_{gg}^{(2)}$

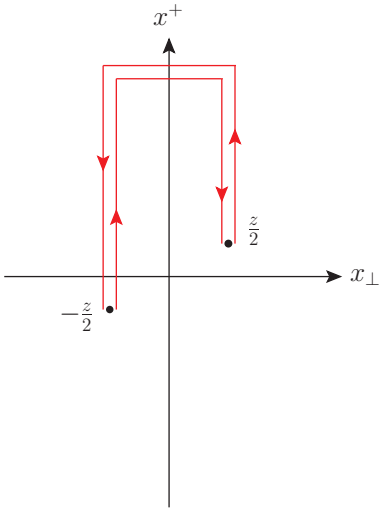

$\mathcal{F}_{gg}^{(3)}$

Forward dijet production in pA collisions

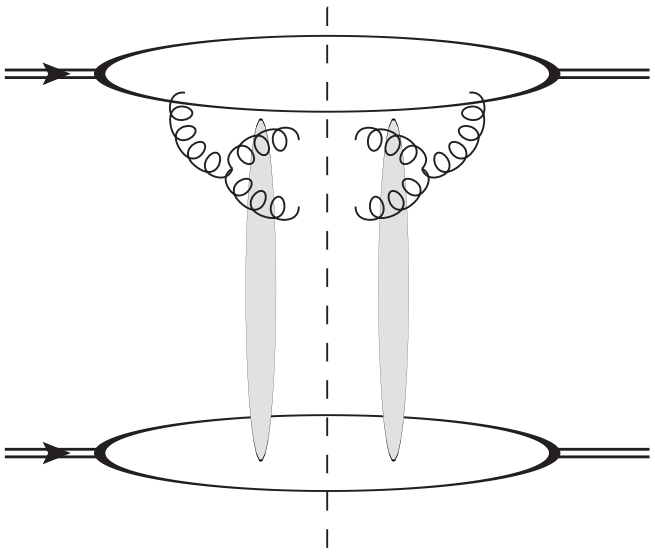

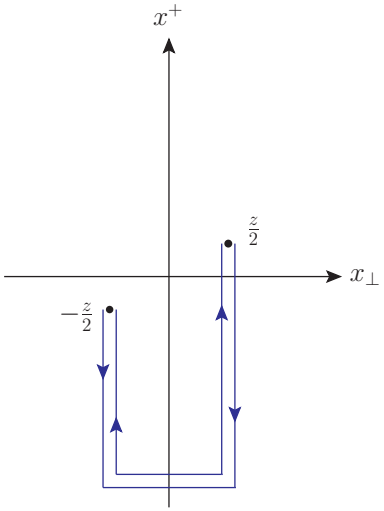

$\mathcal{F}_{gg}^{(4)}$

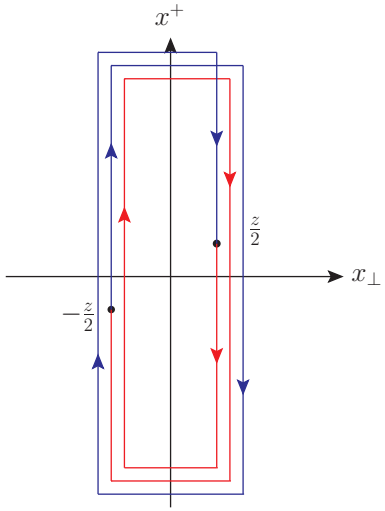

$\mathcal{F}_{gg}^{(5)}$

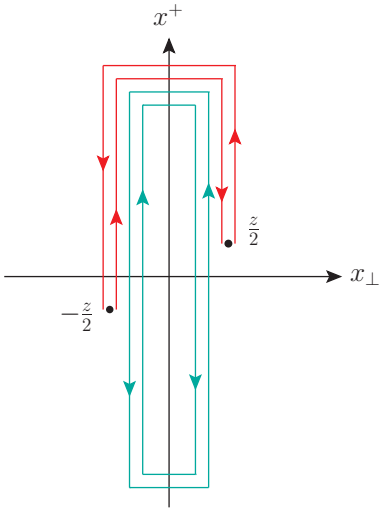

$\mathcal{F}_{gg}^{(6)}$

The dilute limit

The dilute limit in terms of TMD distributions

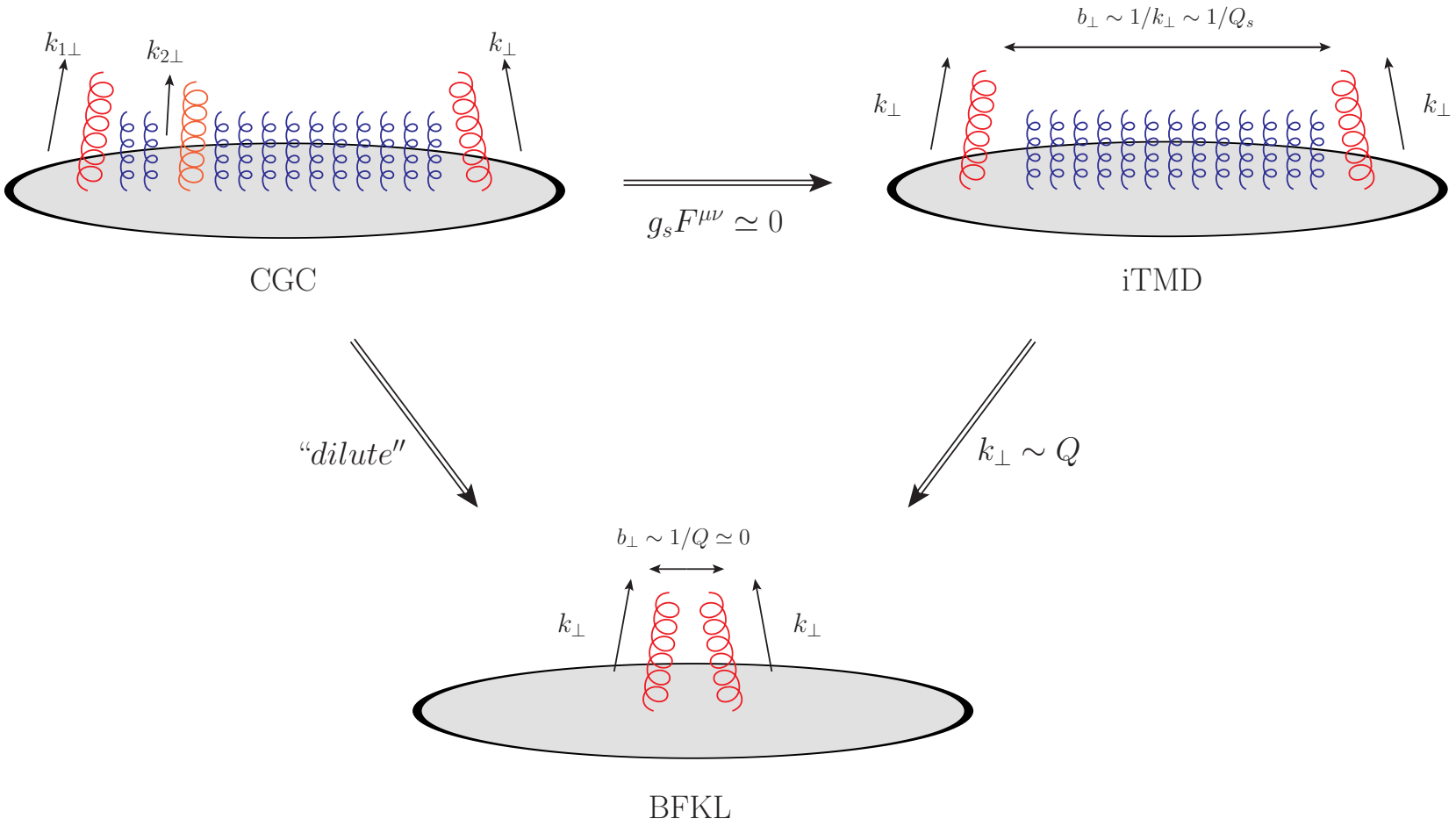

Two kinds of multiple scattering effects: higher genuine twists and higher kinematic twists

Genuine saturation effects at the EIC

Probing genuine saturation at the EIC

"Saturation" as the enhancement of genuine higher twists

Large gluon occupancy $\Rightarrow g_s F \sim 1$

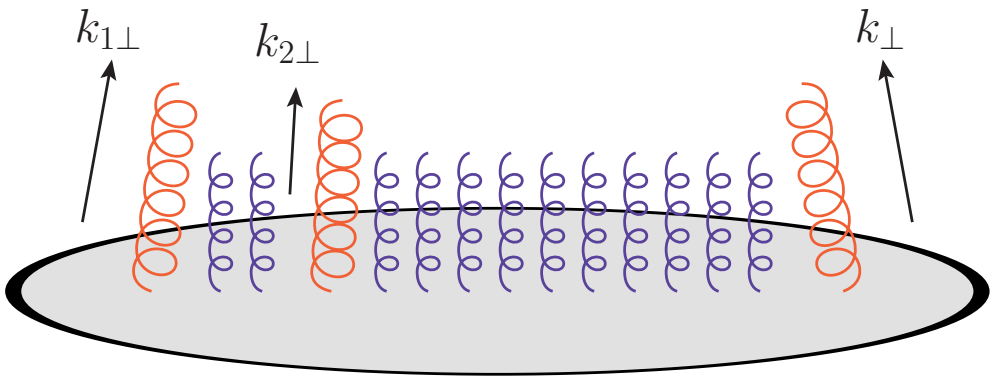

$$g_s^2 \int d^4 b_1 d^4 b_2 d^4 b' \delta\left(b_1^-\right) \delta\left(b_2^-\right) \delta\left(b'^-\right) e^{i(k_1\cdot b_1)+i(k_2\cdot b_2)-i\left(k\cdot b'\right)}$$
$$\times \frac{\left\langle P \left| F^{i-}(b_1)\mathcal{U}^{[\pm]}_{b_1,b_2} g_s F^{j-}(b_2)\mathcal{U}^{[\pm]}_{b_2,b'} F^{k-}(b')\mathcal{U}^{[\pm]}_{b',b_1} \right| P \right\rangle}{\langle P|P\rangle}$$

For dense targets, the Wandzura-Wilczek approximation should be less valid

Probing genuine saturation at the EIC

Genuine saturation effects at the EIC

Back-to-back forward dijet/dihadron production

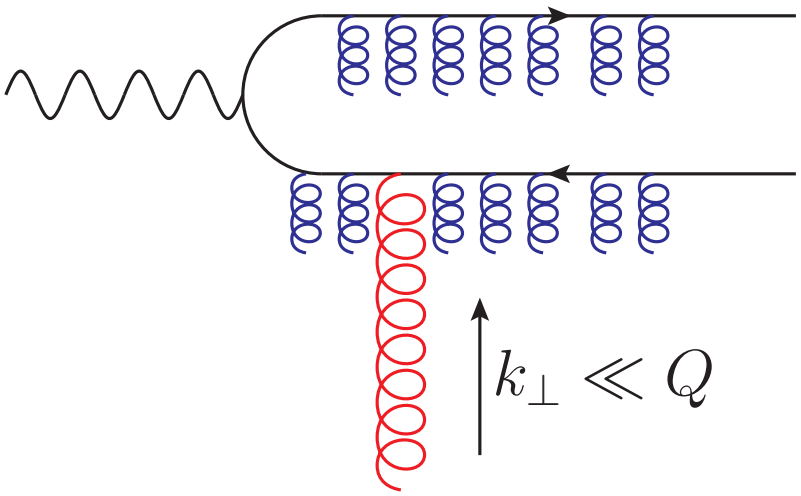

CGC in the correlation limit = leading twist TMD factorization

= leading power 1-body contribution

Probing genuine saturation at the EIC

Back-to-back forward dijet/dihadron production

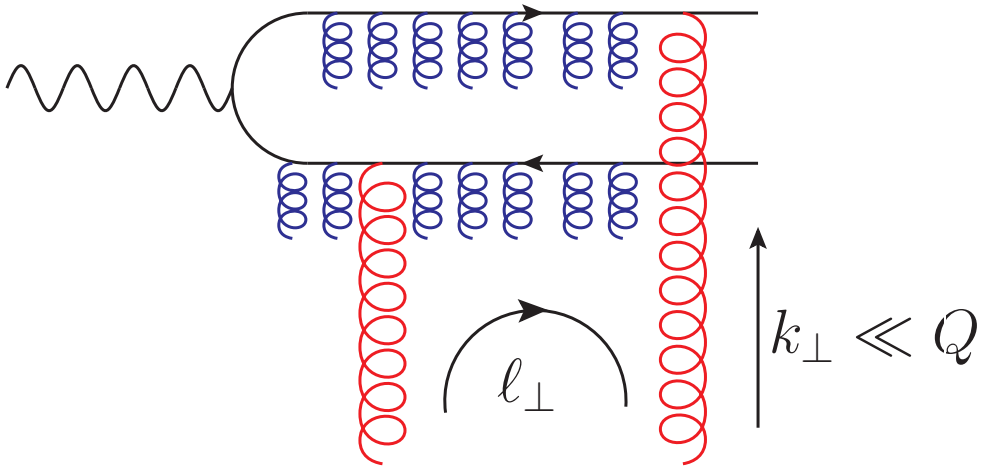

Even at leading power of $k_\perp/Q$, the genuine higher twist term contributes thanks to the loop transverse momentum

$$\int d^2\ell_\perp/Q^2(...) \to Q_s^2/Q^2?$$

The discrepancy between correlated CGC or TMD and observation will be due to genuine saturation

Credits to [Mäntysaari,Müller,Salazar,Schenke] for their numerical observation

Deeply Virtual Meson Production

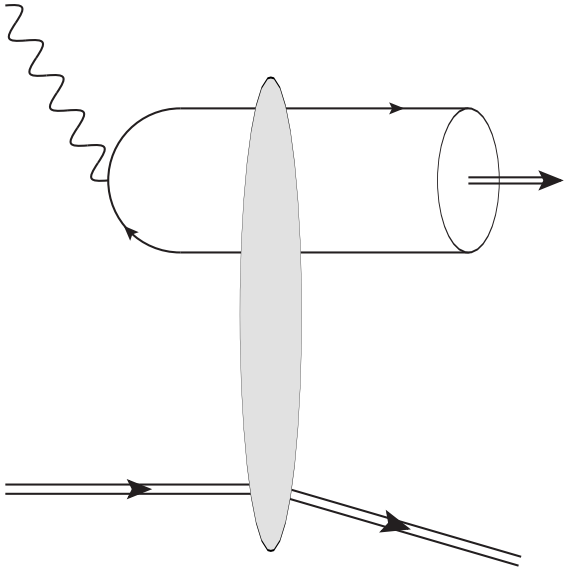

DVMP, the Pomeron and the Odderon

Exclusive low x cross section

Exclusive amplitudes at the EIC = GTMD amplitude

[Altinoluk, RB], [RB, Mehtar-Tani]

$$\left\langle P', S' \left| \mathrm{Tr}\left(U_{x_1} U^\dagger_{x_2}\right) - N_c \right| P, S \right\rangle$$
$$= \frac{\alpha_s \bar{P}^-}{M} e^{-i\boldsymbol{\Delta}\cdot\left(\frac{x_1+x_2}{2}\right)} \delta\left(\Delta^-\right) \int \frac{d^2\boldsymbol{k}}{\boldsymbol{k}^2 - \frac{\boldsymbol{\Delta}^2}{4}}$$
$$\times \left[e^{-i(\boldsymbol{k}\cdot\boldsymbol{r})} - \frac{1}{2}\left(e^{i\left(\boldsymbol{\Delta}\cdot\frac{\boldsymbol{r}}{2}\right)} + e^{-i\left(\boldsymbol{\Delta}\cdot\frac{\boldsymbol{r}}{2}\right)}\right) + \frac{(\boldsymbol{k}\cdot\boldsymbol{r})}{(\boldsymbol{\Delta}\cdot\boldsymbol{r})}\left(e^{i\left(\boldsymbol{\Delta}\cdot\frac{\boldsymbol{r}}{2}\right)} - e^{-i\left(\boldsymbol{\Delta}\cdot\frac{\boldsymbol{r}}{2}\right)}\right)\right]$$
$$\times \bar{u}_{P',S'} \left[F^g_{1,1} + i\frac{\sigma^{i-}}{\bar{P}^-}\left(\boldsymbol{k}^i F^g_{1,2} + \boldsymbol{\Delta}^i F^g_{1,3}\right) + i\frac{\sigma^{ij}\boldsymbol{k}^i\boldsymbol{\Delta}^j}{M^2} F^g_{1,4}\right] u_{P,S}$$

Every exclusive low x process will probe a Wigner distribution!

Gluon GTMDs

The dipole-type gluon GTMDs

$$\left\langle P', S' \left| \mathrm{Tr}\left(U_{\boldsymbol{x}_1} U_{\boldsymbol{x}_2}{}^{\dagger}\right) - N_c \right| P, S \right\rangle$$
$$= \frac{\alpha_s \bar{P}^-}{M} e^{-i\boldsymbol{\Delta}\cdot\left(\frac{\boldsymbol{x}_1+\boldsymbol{x}_2}{2}\right)} \delta\left(\Delta^-\right) \int \frac{d^2\boldsymbol{k}}{\boldsymbol{k}^2 - \frac{\boldsymbol{\Delta}^2}{4}}$$
$$\times\, e^{-i(\boldsymbol{k}\cdot(\boldsymbol{x}_1-\boldsymbol{x}_2))} \bar{u}_{P',S'} \left[F^g_{1,1} + i\frac{\sigma^{i-}}{\bar{P}^-}\left(\boldsymbol{k}^i F^g_{1,2} + \boldsymbol{\Delta}^i F^g_{1,3}\right)\right] u_{P,S}$$

The C parity of the process selects the $\boldsymbol{k} \leftrightarrow -\boldsymbol{k}$ symmetry of the GTMDs

$$F^g_{1,(1,3)} = f_{1,(1,3)}(x,\xi,\boldsymbol{k}^2,|\boldsymbol{k}\cdot\boldsymbol{\Delta}|,\boldsymbol{\Delta}^2) + i\frac{(\boldsymbol{k}\cdot\boldsymbol{\Delta})}{M^2} g_{1,(1,3)}(x,\xi,\boldsymbol{k}^2,|\boldsymbol{k}\cdot\boldsymbol{\Delta}|,\boldsymbol{\Delta}^2)$$

$$F^g_{1,2} = \frac{(\boldsymbol{k}\cdot\boldsymbol{\Delta})}{M^2} f_{1,2}(x,\xi,\boldsymbol{k}^2,|\boldsymbol{k}\cdot\boldsymbol{\Delta}|,\boldsymbol{\Delta}^2) + i g_{1,2}(x,\xi,\boldsymbol{k}^2,|\boldsymbol{k}\cdot\boldsymbol{\Delta}|,\boldsymbol{\Delta}^2)$$

DVMP and the Pomeron(s)

Pomeron exchange: C odd meson production

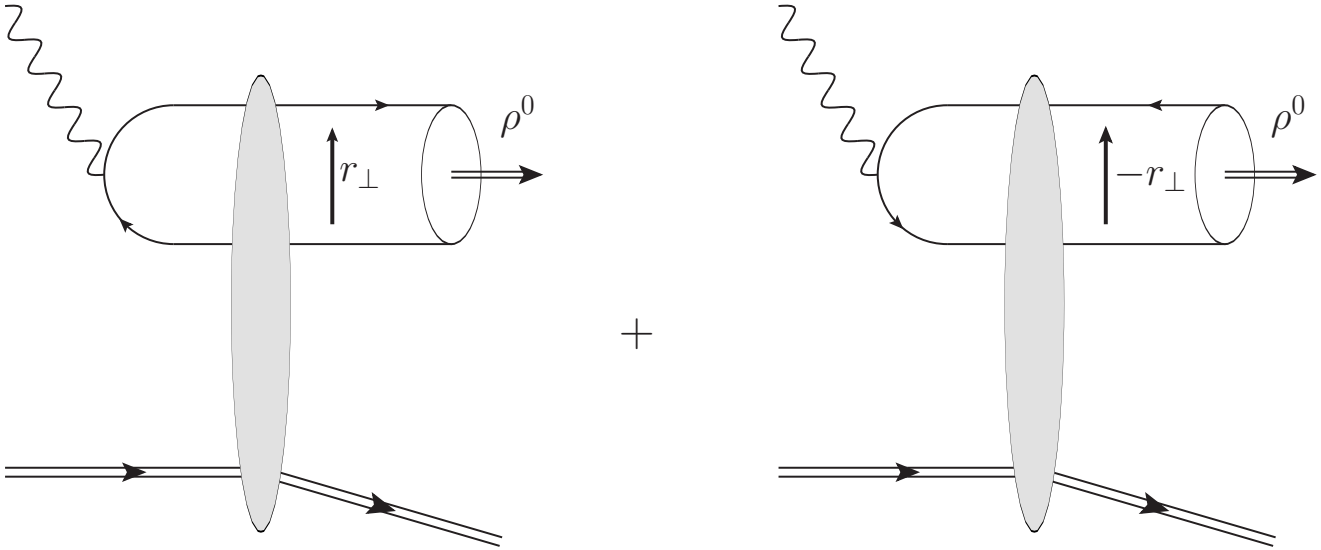

$$\frac{1}{2}\left[\mathrm{Tr}\left(U_{b+\frac{r}{2}}U^\dagger_{b-\frac{r}{2}}\right) + \mathrm{Tr}\left(U_{b-\frac{r}{2}}U^\dagger_{b+\frac{r}{2}}\right)\right] - N_c$$

In the forward limit, involves the unpolarized TMD

$$\left(\bar{u}_{P',S'}\gamma^+ u_{P,S}\right) xf(x, \boldsymbol{k}^2)$$

DVMP and the Odderon(s)

Odderon exchange: C even meson production

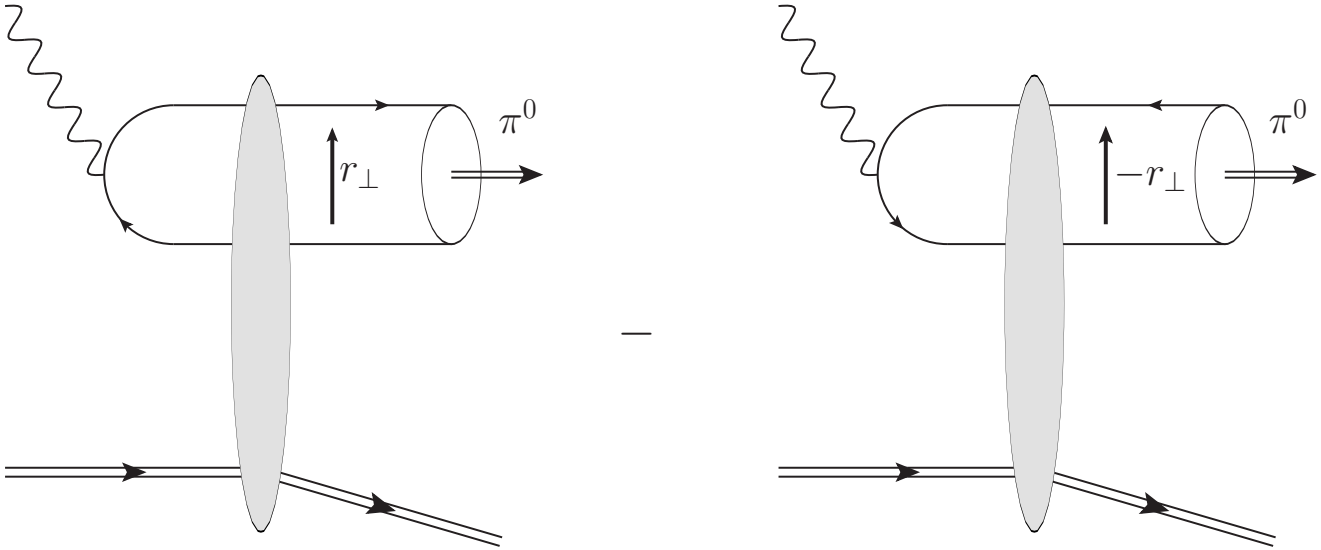

$$\frac{1}{2}\left[\mathrm{Tr}\left(U_{b+\frac{r}{2}}U^\dagger_{b-\frac{r}{2}}\right) \quad - \quad \mathrm{Tr}\left(U_{b-\frac{r}{2}}U^\dagger_{b+\frac{r}{2}}\right)\right]$$

In the forward limit, involves the Sivers TMD

$$\left(\bar{u}_{P',S'}\sigma^{+j}u_{P,S}\right) xf_{1T}^{\perp}(x,\boldsymbol{k}^2)$$

Probing the Sivers function

Thanks to the Odderon/GTMD equivalence, the cross section for exclusive π^0 electroproduction at small x and small t with unpolarized lepton and proton beams is a direct probe for the gluon Sivers function

$$\frac{d\sigma}{d\xi dQ^2 d|t|} \simeq (2\pi)^3 \frac{\alpha_{\rm em}^2 \alpha_s^2 f_\pi^2}{8\xi N_c M^2 Q^2}(1-y+\frac{y^2}{2}) \times \left[\int_0^1 dz \frac{\phi_\pi(z)}{z\bar{z}Q^2} \int d\boldsymbol{k}^2 \frac{\boldsymbol{k}^2}{\boldsymbol{k}^2 + z\bar{z}Q^2} x f_{1T}^{\perp}(x, \boldsymbol{k}^2)\right]^2 .$$

We can thus understand the gluonic content of the transversely polarized protons without polarizing the proton beam.

[RB, Hatta, Szymanowski, Wallon]

Publications as a CFNS postdoc

- Altinoluk, RB, Marquet, Taels, *TMD factorization for dijets + photon production from the dilute-dense CGC framework*, JHEP 1907 (2019) 079
- Altinoluk, RB, Kotko, *Interplay of the CGC and TMD frameworks to all orders in kinematic twist*, JHEP 1905 (2019) 156
- Altinoluk, RB, *Low x physics as an infinite twist (G)TMD framework: unravelling the origins of saturation*, JHEP 1910 (2019) 208
- RB, Hatta, Yuan, *Proton Spin Structure at Small-x*, Phys. Lett. B797 (2019) 134817
- RB, Grabovsky, Szymanowski, Wallon, *Towards a complete next-to-logarithmic description of forward exclusive diffractive dijet electroproduction at HERA: real corrections*, Phys.Rev. D100 (2019) no.7, 074020
- Altinoluk, RB, Marquet, Taels, *Gluon TMDs from Forward pA Collisions in the CGC*, Acta Phys.Polon. B50 (2019) 969

Presentations given as a CFNS postdoc

- *Probing Nucleons and Nuclei in High Energy Collisions*, INT Seattle
- Seminar in BNL
- *Inaugural Symposium and the first review of the CFNS*, Stony Brook
- *XXV Cracow Epiphany Conference*, Krakow (Poland)
- *Initial Stages 2019* Plenary talk, New York
- *Quarkonia as tools*, Aussois (France)
- Seminar in JLab
- *EIC User Group Meeting* Paris (France)
- *Low x 2019*, Nicosia (Cyprus)
- *ISMD 2019*, Santa Fe (NM)
- *POETIC 2019*, Berkeley (CA)
- Seminar in the National Centre for Nuclear Research (NCBJ), Warsaw (Poland)
- *Resummation, Evolution, Factorization (REF2019)*, Pavia (Italy)
- Seminar in Jagiellonian University, Krakow (Poland)

Backup

Parametrization and coupling to the target hadron

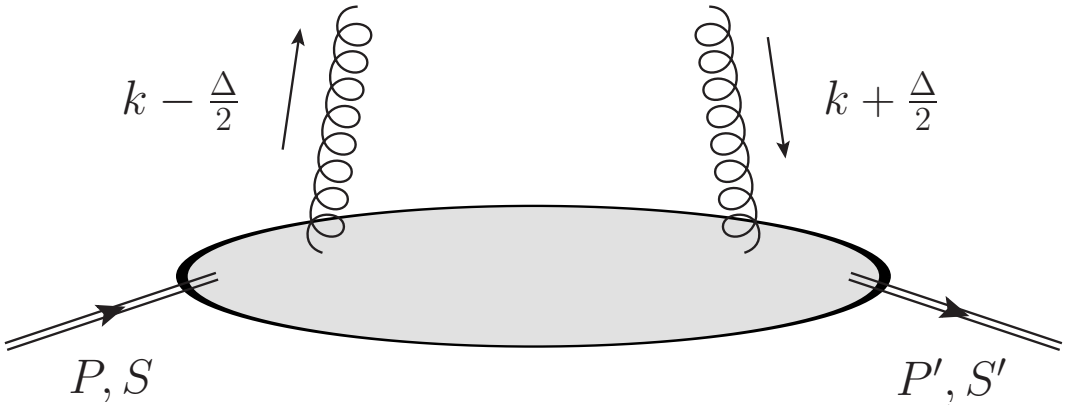

$$\int d^4 v \delta(v^-) e^{ix\bar{P}^- v^+ - i(\boldsymbol{k}\cdot\boldsymbol{v})} \langle P'S' | \mathrm{Tr}\left[F^{i-}(-\frac{v}{2}) \mathcal{U}^{[+]}_{\frac{v}{2},-\frac{v}{2}} F^{i-}(\frac{v}{2}) \mathcal{U}^{[-]}_{-\frac{v}{2},\frac{v}{2}} \right] | PS \rangle$$

$$= (2\pi)^3 \frac{\bar{P}^-}{2M} \bar{u}_{P'S'} \left[F^g_{1,1} + i \frac{\sigma^{i-}}{\bar{P}^-} (\boldsymbol{k}^i F^g_{1,2} + \boldsymbol{\Delta}^i F^g_{1,3}) + i \frac{\sigma^{ij} \boldsymbol{k}^i \boldsymbol{\Delta}^j}{M^2} F^g_{1,4} \right] u_{PS}$$

Operator product expansion (OPE)

- Moderate x OPE: factorization

$$\mathcal{O}(z) \to \sum_n C_n(z,\mu)\mathcal{O}_n(\mu)$$

  - Operators are ordered in twists (dimension − spin)
  - Divergences in C_n are canceled via renormalization of $\mathcal{O}_n$
  - Easy task: resumming powers of s and logarithms of Q^2. Difficulty: including twist corrections and logarithms of s

- Low x OPE:

$$\mathcal{O}(z) \to C_0(z,Y)\mathcal{O}_0(Y) + \alpha_s C_1(z,Y)\mathcal{O}_1(Y) + \ldots$$

  - Operators are sorted by representations of $SU(N_c)$, order by order in α_s
  - Built order by order in α_s. The spurious pole in $C_n(z,Y)$ is canceled via the B/JIMWLK RGE of $\mathcal{O}_{n-1}(Y)$
  - Easy task: resumming twists and logarithms of s. Difficulty: including subeikonal corrections and logarithms of Q^2

Small dipole "correlation" expansion

Taylor expansion of the Wilson line operators

$$U^{R_1}_{\boldsymbol{b}+\frac{\boldsymbol{r}}{2}} T^{R_0} U^{R_2}_{\boldsymbol{b}-\frac{\boldsymbol{r}}{2}} - U^{R_1}_{\boldsymbol{b}} T^{R_0} U^{R_2}_{\boldsymbol{b}} = \frac{\boldsymbol{r}^i}{2} \left[\left(\partial^i U^{R_1}_{\boldsymbol{b}} \right) T^{R_0} U^{R_2}_{\boldsymbol{b}} - U^{R_1}_{\boldsymbol{b}} T^{R_0} \left(\partial^i U^{R_2}_{\boldsymbol{b}} \right) \right] + O\left(\boldsymbol{r}^2\right)$$

allows for a match at leading twist

$$d\sigma = \mathcal{H}(b,r) \otimes \left[U^{R_1}_{\boldsymbol{b}+\frac{\boldsymbol{r}}{2}} T^{R_0} U^{R_2}_{\boldsymbol{b}-\frac{\boldsymbol{r}}{2}} - U^{R_1}_{\boldsymbol{b}} T^{R_0} U^{R_2}_{\boldsymbol{b}} \right]$$
$$\times \mathcal{H}^*(b',r') \otimes \left[U^{R_2\dagger}_{\boldsymbol{b}'-\frac{\boldsymbol{r}'}{2}} T^{R_0\dagger} U^{R_1\dagger}_{\boldsymbol{b}'+\frac{\boldsymbol{r}'}{2}} - U^{R_2\dagger}_{\boldsymbol{b}'} T^{R_0\dagger} U^{R_1\dagger}_{\boldsymbol{b}'} \right]$$

$$\rightarrow d\sigma^{(i)}_{\boldsymbol{k}=\boldsymbol{0}} \otimes \Phi^{(i)}(x,\boldsymbol{k}) + O\left(\boldsymbol{r}^2\right)$$

How to extend this to higher twist corrections?

Power expansion for TMD observables: dealing with powers of $k_\perp/Q$

Consider (hypothetical) hard subamplitudes with non-zero transverse momenta in the t channel. The amplitude would read:

$$\mathcal{H}_1^i(\boldsymbol{k}) \otimes \int d^2\boldsymbol{x}_1 e^{-i(\boldsymbol{k}\cdot\boldsymbol{x}_1)} [\pm\infty, x_1] F^{i-}(x_1) [x_1, \pm\infty]$$

$$+ \mathcal{H}_2^{ij}(\boldsymbol{k}_1, \boldsymbol{k}_2) \otimes \int d^2\boldsymbol{x}_1 d^2\boldsymbol{x}_2 e^{-i(\boldsymbol{k}_1\cdot\boldsymbol{x}_1) - i(\boldsymbol{k}_2\cdot\boldsymbol{x}_2)} [\pm\infty, x_1] F^{i-}(x_1) [x_1, x_2] F^{j-}(x_2) [x_2, \pm\infty]$$

$$+ \ldots$$

$$= \mathcal{H}_1^i(\boldsymbol{k}) \otimes \mathcal{O}_1^i(\boldsymbol{k}) + \mathcal{H}_2^{ij}(\boldsymbol{k}_1, \boldsymbol{k}_2) \otimes \mathcal{O}_2^{ij}(\boldsymbol{k}_1, \boldsymbol{k}_2) + \ldots$$

Power expansion for TMD amplitudes:
dealing with powers of $k_\perp/Q$

Leading twist amplitude

$$\mathcal{A}_{LT} = \mathcal{H}_1^i(\mathbf{0}) \otimes \mathcal{O}_1^i(\boldsymbol{k})$$

Next-to-leading twist amplitude

$$\mathcal{A}_{NLT} = \boldsymbol{k} \cdot \left(\partial_{\boldsymbol{k}} \mathcal{H}_1^i\right)(\mathbf{0}) \otimes \mathcal{O}_1^i(\boldsymbol{k}) + \mathcal{H}_2^{ij}(\mathbf{0},\mathbf{0}) \otimes \mathcal{O}_2^{ij}(\boldsymbol{k}_1, \boldsymbol{k}_2)$$

First term: kinematic twist correction, second term: genuine twist corrections

The so-called dilute limit in terms of TMD distributions

A hybrid framework with off-shell gluons from the target

[Kotko, Kutak, Marquet, Petreska, Sapeta, Van Hameren]

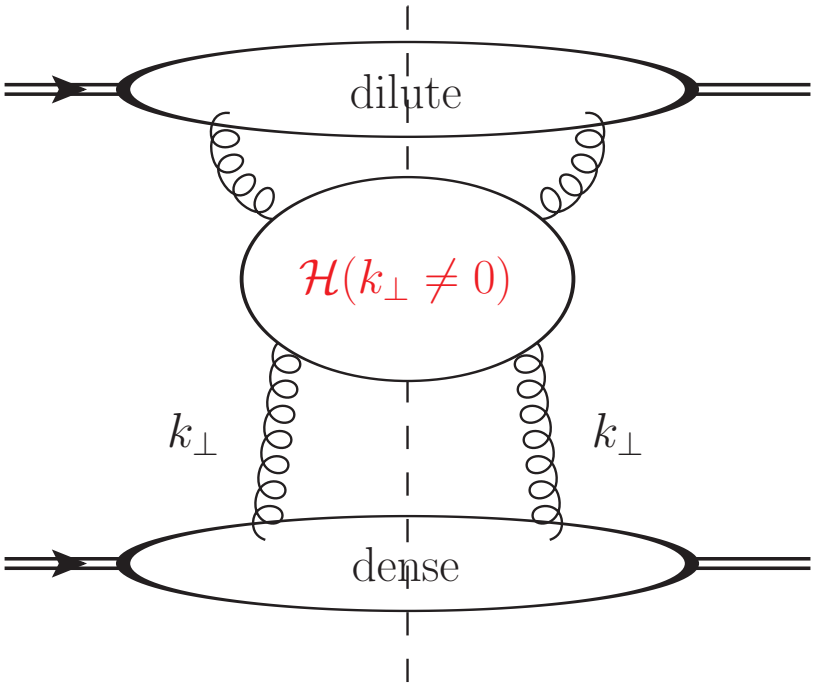

- QCD gauge invariance for multileg amplitudes with an off-shell leg restored with target counterterms [Kotko]
- TMD gauge links are built from the [Bomhof, Mulders, Pijlman] techniques
- Eventually, looks like BFKL, but with distinct TMD distributions for different color flow structures. Interpolates between the TMD regime $|k_\perp| \ll Q$ and the BFKL regime $|k_\perp| \sim Q$

Small x frameworks

QCD shockwaves $\quad k_\perp, Q \ll s$

$$\sum_i \mathcal{H}_2^{(i)}(\boldsymbol{k}) \otimes \mathcal{F}_2^{(i)}(\boldsymbol{k}) + \mathcal{H}_3^{(i)}(\boldsymbol{k}_1, \boldsymbol{k}_2) \otimes \mathcal{F}_3^{(i)}(\boldsymbol{k}_1, \boldsymbol{k}_2) + \mathcal{H}_4^{(i)}(\boldsymbol{k}_1, \boldsymbol{k}_2, \boldsymbol{k}_3) \otimes \mathcal{F}_4^{(i)}(\boldsymbol{k}_1, \boldsymbol{k}_2, \boldsymbol{k}_3)$$

TMD at small x $\quad k_\perp \ll Q \ll s$

$$\sum_i \mathcal{H}_2^{(i)}(\mathbf{0}) \otimes \mathcal{F}_2^{(i)}(\boldsymbol{k})$$

BFKL $\quad k_\perp \lesssim Q \ll s$

$$\mathcal{H}_2(\boldsymbol{k}) \otimes \mathcal{F}_2(\boldsymbol{k})$$

Small x Improved TMD $\quad k_\perp, Q \ll s?$

$$\sum_i \mathcal{H}_2^{(i)}(\boldsymbol{k}) \otimes \mathcal{F}_2^{(i)}(\boldsymbol{k})$$

First, take the Wandzura-Wilczek approximation

[Altinoluk, RB, Kotko]: matches ITMD cross sections

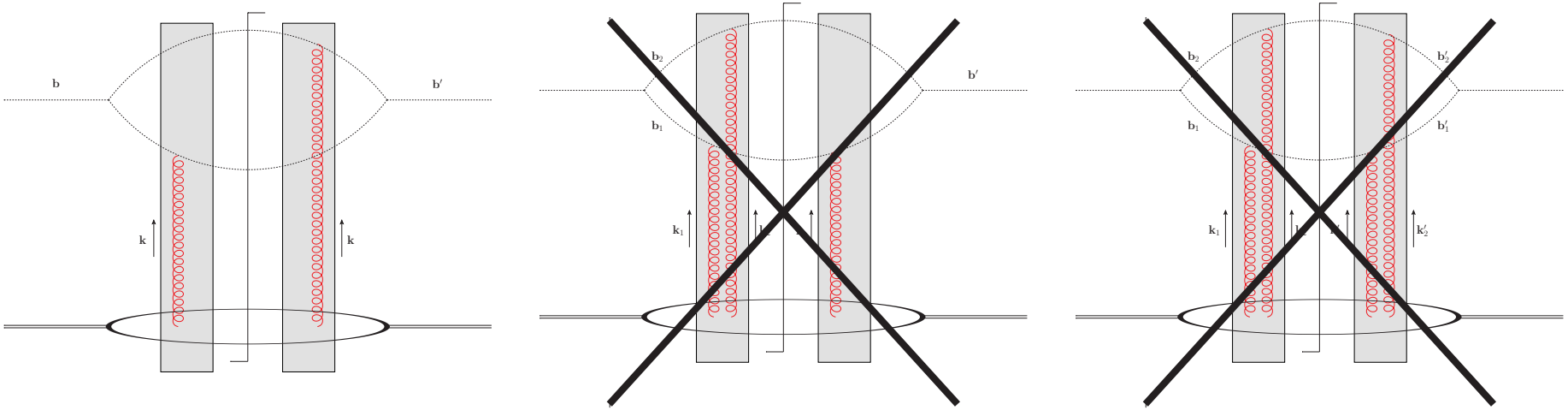

$$\sigma = \mathcal{H}_2^{ij}(k_\perp) \otimes \left\langle P \middle| F^{-i} W F^{-j} W \middle| P \right\rangle$$

$$+\mathcal{H}_3^{ijk}(k_\perp, k_{1\perp}) \otimes \left\langle P \middle| F^{-i} W g_s F^{-j} W F^{-k} W \middle| P \right\rangle$$

$$+\mathcal{H}_4^{ijkl}(k_\perp, k_{1\perp}, k'_{1\perp}) \otimes \left\langle P \middle| F^{-i} W g_s F^{-j} W g_s F^{-k} W F^{-l} W \middle| P \right\rangle$$

WW approximation at large k_t: the BFKL limit

- At large transverse momentum transfer, no multiple scattering from the gauge links

TMD with staple gauge links

$$\int \frac{d^2\boldsymbol{k}}{(2\pi)^2} e^{-i(\boldsymbol{k}\cdot\boldsymbol{x})} \int dx^+ \left\langle P \left| F^{i-}(x) \left[x^+, \pm\infty\right]_{\boldsymbol{x}} \left[\pm\infty, 0^+\right]_{\boldsymbol{0}} F^{j-}(0) \left[0^+, \pm\infty\right]_{\boldsymbol{0}} \left[\pm\infty, x^+\right]_{\boldsymbol{x}} \right| P \right\rangle$$

Large $k_\perp \sim Q \Rightarrow$ small transverse distance $x_\perp$

$$\left[x^+, \pm\infty\right]_{\boldsymbol{x}} \left[\pm\infty, y^+\right]_{\boldsymbol{0}} \sim \left[x^+, y^+\right]_{\boldsymbol{x}\sim\boldsymbol{0}}.$$

All TMD distributions shrink into the unintegrated PDF

$$\int \frac{d^2\boldsymbol{k}}{(2\pi)^2} e^{-i(\boldsymbol{k}\cdot\boldsymbol{x})} \int dx^+ \left\langle P \left| F^{i-}(x) \left[x^+, 0^+\right]_{\boldsymbol{0}} F^{j-}(0) \left[0^+, x^+\right]_{\boldsymbol{0}} \right| P \right\rangle \Big|_{x^-=0}$$

and one recovers a BFKL cross section.

BFKL distributions and genuine twist corrections

Unintegrated PDF = 2-Reggeon matrix element

$$\int d^2\boldsymbol{x} e^{-i(\boldsymbol{k}\cdot\boldsymbol{x})} \int dx^+ \left\langle P \left| F^{i-}(x) \left[x^+, 0^+\right]_{\mathbf{0}} F^{j-}(0) \left[0^+, x^+\right]_{\mathbf{0}} \right| P \right\rangle \Big|_{x^-=0}$$

Integration by parts

$$\int dx^+ \int d^2\boldsymbol{x} e^{-i(\boldsymbol{k}\cdot\boldsymbol{x})} \boldsymbol{k}^i \boldsymbol{k}^j \left\langle P \left| \left[-\infty, x^+\right]_{\mathbf{0}} A^-(x) \left[x^+, +\infty\right]_{\mathbf{0}} \left[+\infty, 0^+\right]_{\mathbf{0}} A^-(0) \left[0^+, -\infty\right]_{\mathbf{0}} \right| P \right\rangle$$

We recognize the so-called nonsense polarizations in axial gauge. We could define a Reggeon operator:

$$R(x) = \int dx^+ \left[-\infty, x^+\right]_{\mathbf{0}} A^-(x) \left[x^+, +\infty\right]_{\mathbf{0}}$$

and rewrite the unintegrated PDF as

$$\int \frac{d^2\boldsymbol{k}}{(2\pi)^2} e^{-i(\boldsymbol{k}\cdot\boldsymbol{x})} \frac{\boldsymbol{k}^i \boldsymbol{k}^j}{\boldsymbol{k}^2} \boldsymbol{k}^2 \left\langle P \left| R(\boldsymbol{x}) R^\dagger(0) \right| P \right\rangle$$

BFKL distributions and genuine twist corrections

What is neglected in BFKL: 3- and 4-Reggeon matrix elements.

$$\langle P\,|RR|\,P\rangle\,, \quad \langle P\,|R(g_s R)R|\,P\rangle\,, \quad \langle P\,|R(g_s R)(g_s R)R|\,P\rangle$$

They are not perturbatively suppressed.

Suppression = WW approximation (unquantifiable)

"Saturation" from a TMD gauge link

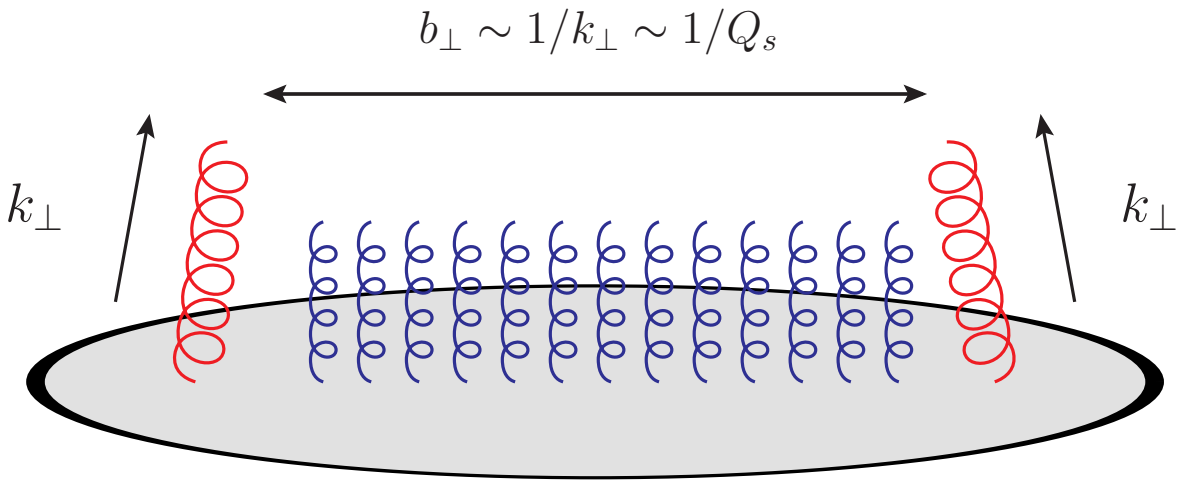

$$g_s^2 \int d^4 b\, \delta\left(b^-\right) e^{i(k\cdot b)} \left\langle P \left| F^{i-}(b)\, \mathcal{U}_{b,0}^{[\pm]} F^{j-}(0)\, \mathcal{U}_{0,b}^{[\pm]} \right| P \right\rangle$$

Expected at small $k_\perp/Q$

"Saturation" from a TMD gauge link

Link length $\sim 1/|k_\perp|$, hence effect suppressed at large $k_\perp$

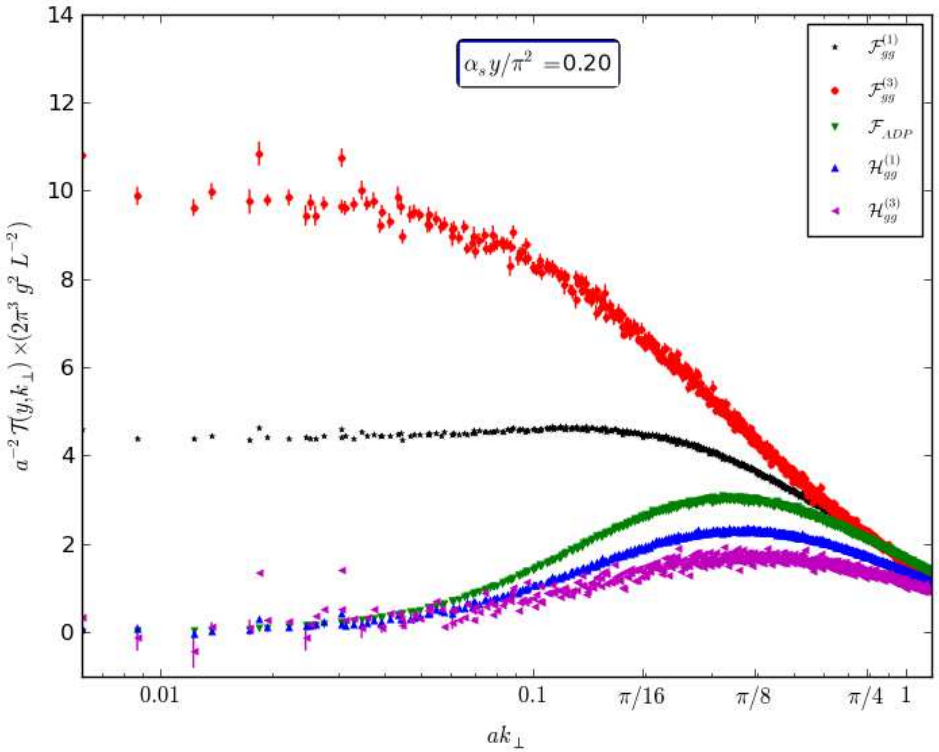

[Marquet, Petreska, Roiesnel ; Marquet, Roiesnel, Taels]

"Saturation" as an enhancement of genuine twists

Large gluon occupancy $\Rightarrow g_s F \sim 1$

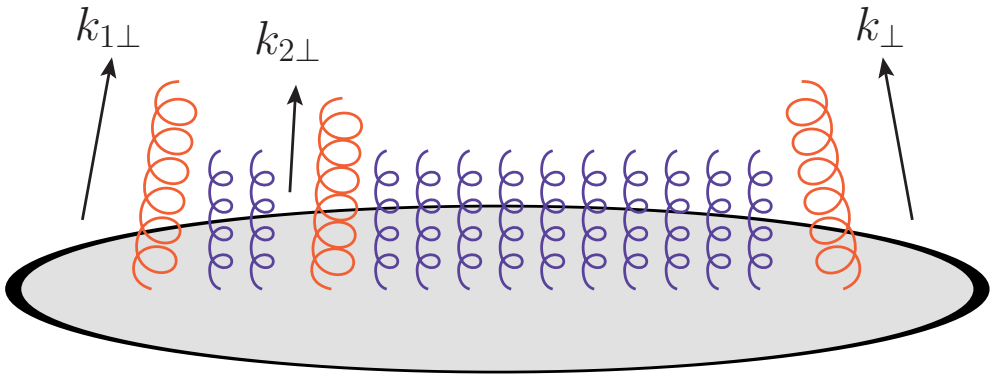

$$g_s^2 \int d^4 b_1 d^4 b_2 d^4 b' \delta\left(b_1^-\right) \delta\left(b_2^-\right) \delta\left(b'^-\right) e^{i(k_1\cdot b_1)+i(k_2\cdot b_2)-i\left(k\cdot b'\right)}$$
$$\times \frac{\left\langle P \left| F^{i-}(b_1)\mathcal{U}^{[\pm]}_{b_1,b_2} g_s F^{j-}(b_2)\mathcal{U}^{[\pm]}_{b_2,b'} F^{k-}(b')\mathcal{U}^{[\pm]}_{b',b_1} \right| P \right\rangle}{\langle P|P\rangle}$$

$k_\perp/Q$-suppressed: expected at large $k_\perp$?

Match without an expansion

Trick: rewrite operators in terms of their derivatives

$$U^{R_1}_{\boldsymbol{b}+\bar{z}\boldsymbol{r}} - U^{R_1}_{\boldsymbol{b}} = -ir^{\mu}_{\perp} \int \frac{d^2\boldsymbol{k}_1}{(2\pi)^2} \int d^2\boldsymbol{b}_1 e^{-i\boldsymbol{k}_1\cdot(\boldsymbol{b}_1-\boldsymbol{b})} \frac{e^{i\bar{z}(\boldsymbol{k}_1\cdot\boldsymbol{r})}-1}{(\boldsymbol{k}_1\cdot\boldsymbol{r})} \left(\partial_\mu U^{R_1}_{\boldsymbol{b}}\right)$$

Rewrite the amplitude

$$\mathcal{A} = (2\pi)\,\delta\left(p_1^+ + p_2^+ - p_0^+\right) \int d^2\boldsymbol{b}\, d^2\boldsymbol{r}\, e^{-i(\boldsymbol{q}\cdot\boldsymbol{r})-i(\boldsymbol{k}\cdot\boldsymbol{b})} \mathcal{H}(\boldsymbol{r})$$

$$\times \left[\left(U^{R_1}_{\boldsymbol{b}+\bar{z}\boldsymbol{r}} - U^{R_1}_{\boldsymbol{b}}\right) T^{R_0} \left(U^{R_2}_{\boldsymbol{b}-z\boldsymbol{r}} - U^{R_2}_{\boldsymbol{b}}\right) + \left(U^{R_1}_{\boldsymbol{b}+\bar{z}\boldsymbol{r}} - U^{R_1}_{\boldsymbol{b}}\right) T^{R_0} U^{R_2}_{\boldsymbol{b}} + U^{R_1}_{\boldsymbol{b}} T^{R_0} \left(U^{R_2}_{\boldsymbol{b}-z\boldsymbol{r}} - U^{R_2}_{\boldsymbol{b}}\right)\right]$$

genuine twist kinematic + genuine twists

Extracting genuine twists: Taylor, IbP, resummation.

Splitting of a particle into two particles in the external shockwave field

$$\mathcal{A} = (2\pi)\,\delta\left(p_1^+ + p_2^+ - p_0^+\right) \int d^2\boldsymbol{b}\, d^2\boldsymbol{r}\, e^{-i(\boldsymbol{q}\cdot\boldsymbol{r}) - i(\boldsymbol{k}\cdot\boldsymbol{b})} \mathcal{H}(\boldsymbol{r})$$
$$\times \left[\left(U^{R_1}_{\boldsymbol{b}+\bar{z}\boldsymbol{r}}\, T^{R_0}\, U^{R_2}_{\boldsymbol{b}-z\boldsymbol{r}}\right) - \left(U^{R_1}_{\boldsymbol{b}}\, T^{R_0}\, U^{R_2}_{\boldsymbol{b}}\right)\right],$$

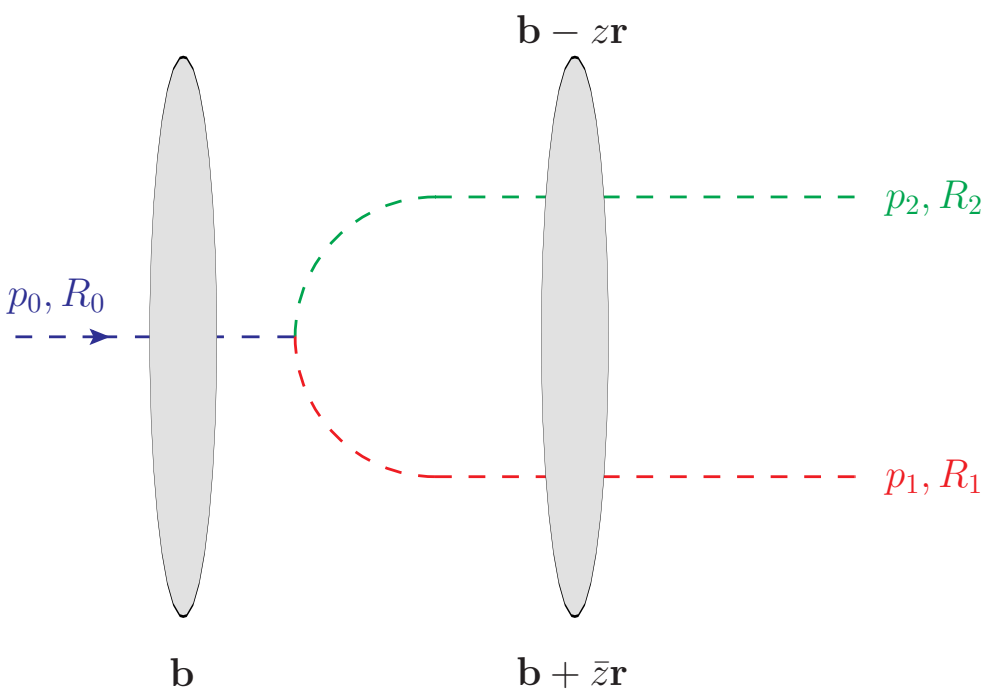

Matching shockwave amplitudes and TMD amplitudes

[Altinoluk, RB], [RB, Mehtar-Tani]

We can cast the shockwave amplitude into a 1-body amplitude

$$\mathcal{A}_1 = (2\pi)\,\delta\left(p_1^+ + p_2^+ - p_0^+\right)\int d^2\boldsymbol{b}\, e^{-i(\boldsymbol{k}\cdot\boldsymbol{b})}(-i)\int d^2\boldsymbol{r}\, e^{-i(\boldsymbol{q}\cdot\boldsymbol{r})} r_\perp^\alpha \mathcal{H}(\boldsymbol{r})$$
$$\times\left[\left(\frac{e^{i\bar{z}(\boldsymbol{k}\cdot\boldsymbol{r})}-1}{(\boldsymbol{k}\cdot\boldsymbol{r})}\right)\left(\partial_\alpha U_{\boldsymbol{b}}^{R_1}\right) T^{R_0} U_{\boldsymbol{b}}^{R_2} + \left(\frac{e^{-iz(\boldsymbol{k}\cdot\boldsymbol{r})}-1}{(\boldsymbol{k}\cdot\boldsymbol{r})}\right) U_{\boldsymbol{b}}^{R_1} T^{R_0}\left(\partial_\alpha U_{\boldsymbol{b}}^{R_2}\right)\right]$$

and a 2-body amplitude

$$\mathcal{A}_2 = (2\pi)\,\delta\left(p_1^+ + p_2^+ - p_0^+\right)\int \frac{d^2\boldsymbol{k}_1}{(2\pi)^2}\frac{d^2\boldsymbol{k}_2}{(2\pi)^2}(2\pi)^2\,\delta^2\left(\boldsymbol{k}_1+\boldsymbol{k}_2-\boldsymbol{k}\right)$$
$$\times\int d^2\boldsymbol{b}_1 d^2\boldsymbol{b}_2 e^{-i(\boldsymbol{k}_1\cdot\boldsymbol{b}_1)-i(\boldsymbol{k}_2\cdot\boldsymbol{b}_2)}\left(\partial^i U_{\boldsymbol{b}_1}^{R_1}\right) T^{R_0}\left(\partial^j U_{\boldsymbol{b}_2}^{R_2}\right)$$
$$\times\left[-\int d^2\boldsymbol{r} e^{-i(\boldsymbol{q}\cdot\boldsymbol{r})}\boldsymbol{r}^i\boldsymbol{r}^j\mathcal{H}(\boldsymbol{r})\left(\frac{e^{-iz(\boldsymbol{k}\cdot\boldsymbol{r})}}{(\boldsymbol{k}\cdot\boldsymbol{r})}\frac{e^{i(\boldsymbol{k}_1\cdot\boldsymbol{r})}-1}{(\boldsymbol{k}_1\cdot\boldsymbol{r})}+\frac{e^{i\bar{z}(\boldsymbol{k}\cdot\boldsymbol{r})}}{(\boldsymbol{k}\cdot\boldsymbol{r})}\frac{e^{-i(\boldsymbol{k}_2\cdot\boldsymbol{r})}-1}{(\boldsymbol{k}_2\cdot\boldsymbol{r})}\right)\right]$$