Center for Frontiers in Nuclear Science

TPC Space Charge Distortions in sPHENIX and Onward

Ross Corliss
Joined CFNS September, 2019
With Abhay Deshpande, Tom Hemmick

Stony Brook University

Center for Frontiers in Nuclear Science

Research Projects

- Previously:
  - DarkLight
  - MVTX detector for sPHENIX
- Now:
  - Analyzing forward π^0s in PHENIX
  - Developing TPC calibration and spacecharge correction scheme for sPHENIX

Stony Brook University

Center for Frontiers in Nuclear Science

sPHENIX

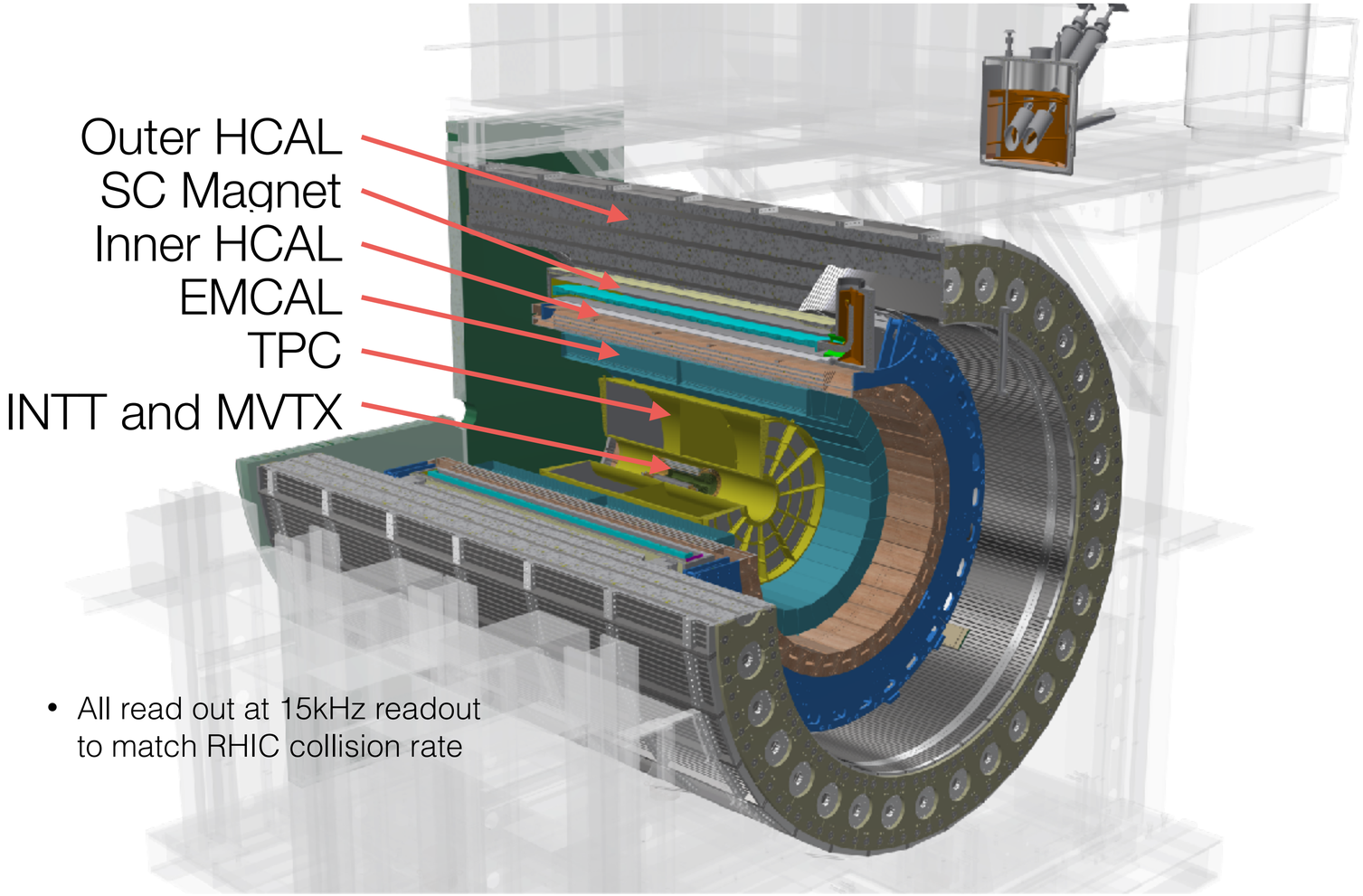

- All read out at 15kHz readout to match RHIC collision rate

Stony Brook University

Center for Frontiers in Nuclear Science

sPHENIX TPC

- Primary measure of track momentum
- Ungated, GEM-based gain stage
- Capable of continuous readout
- Need to handle distortions in high luminosity running

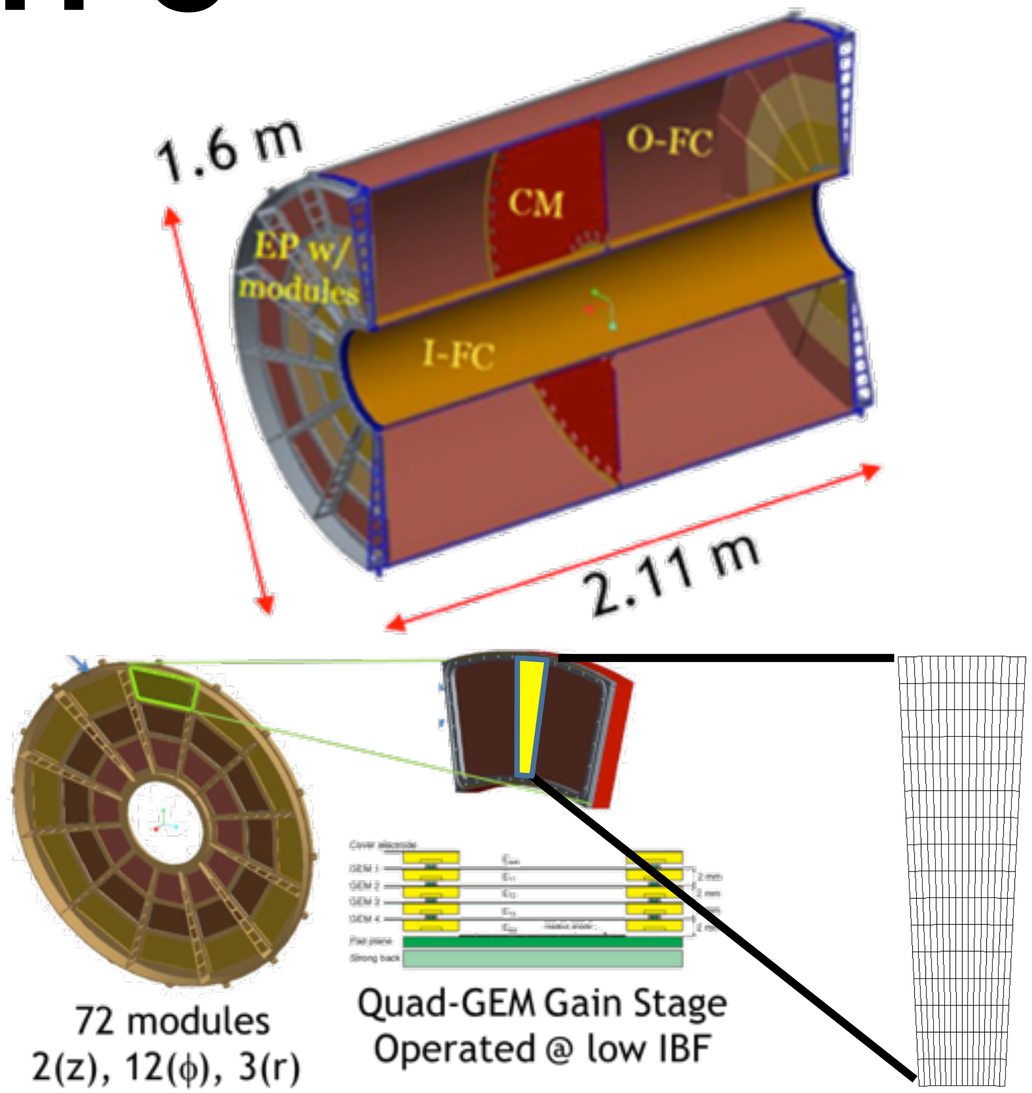

Stony Brook University

Center for Frontiers in Nuclear Science

sPHENIX as "D1D" at EIC

- Extension of sPHENIX proposed as Day-1 Detector for EIC
- Same TPC would be used (with some changes)
- sPHENIX operation prepares us for EIC implementation

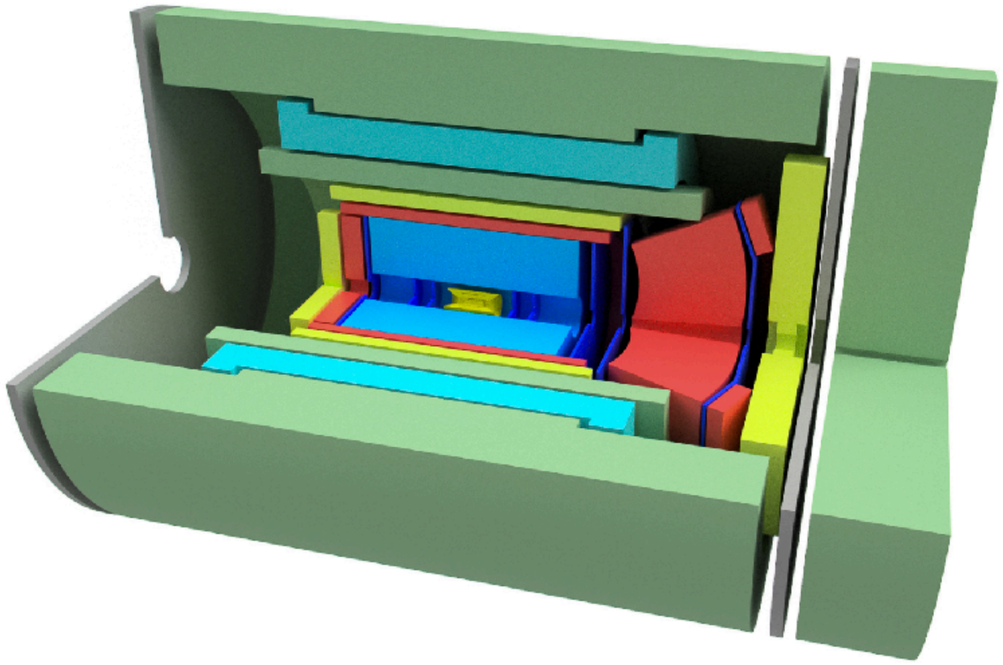

Stony Brook University

Sources of Distortions

To get correct origin of charge, reconstruction must account for:

- Imperfections/misalignments in EM fields
- Primary ions from tracks
- IBF from electrons in avalanche region

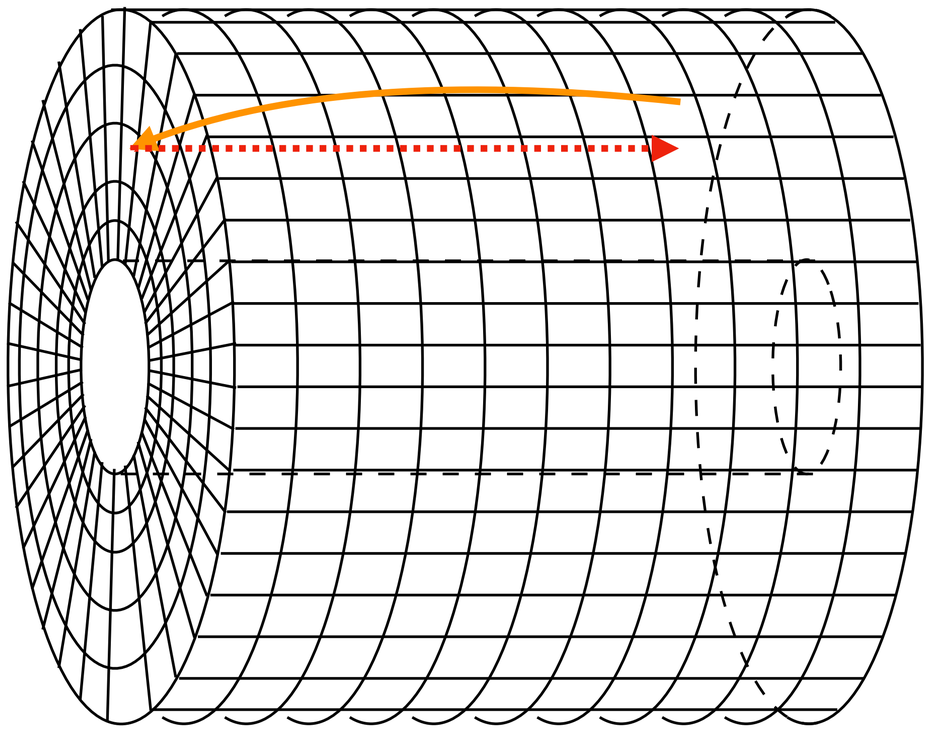

Center for Frontiers in Nuclear Science

Sources of Distortions

To get correct origin of charge, reconstruction must account for:

- Imperfections/misalignments in EM fields ~static
- Primary ions from tracks ~averaged
- IBF from electrons in avalanche region ~compressed and variable

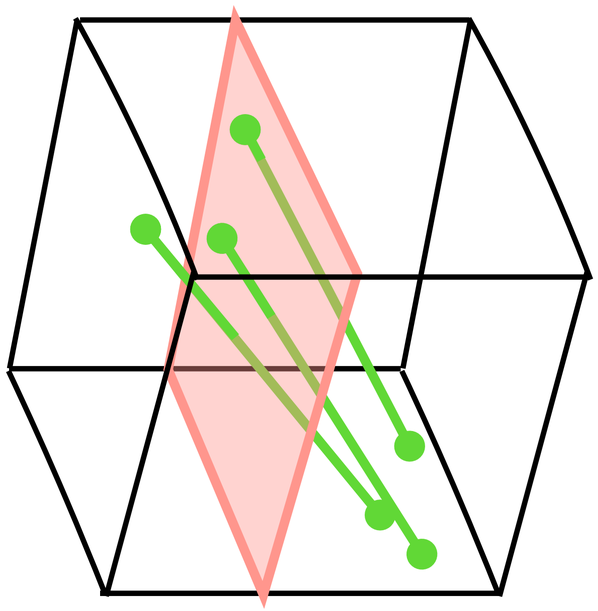

Stony Brook University

Real Distortions

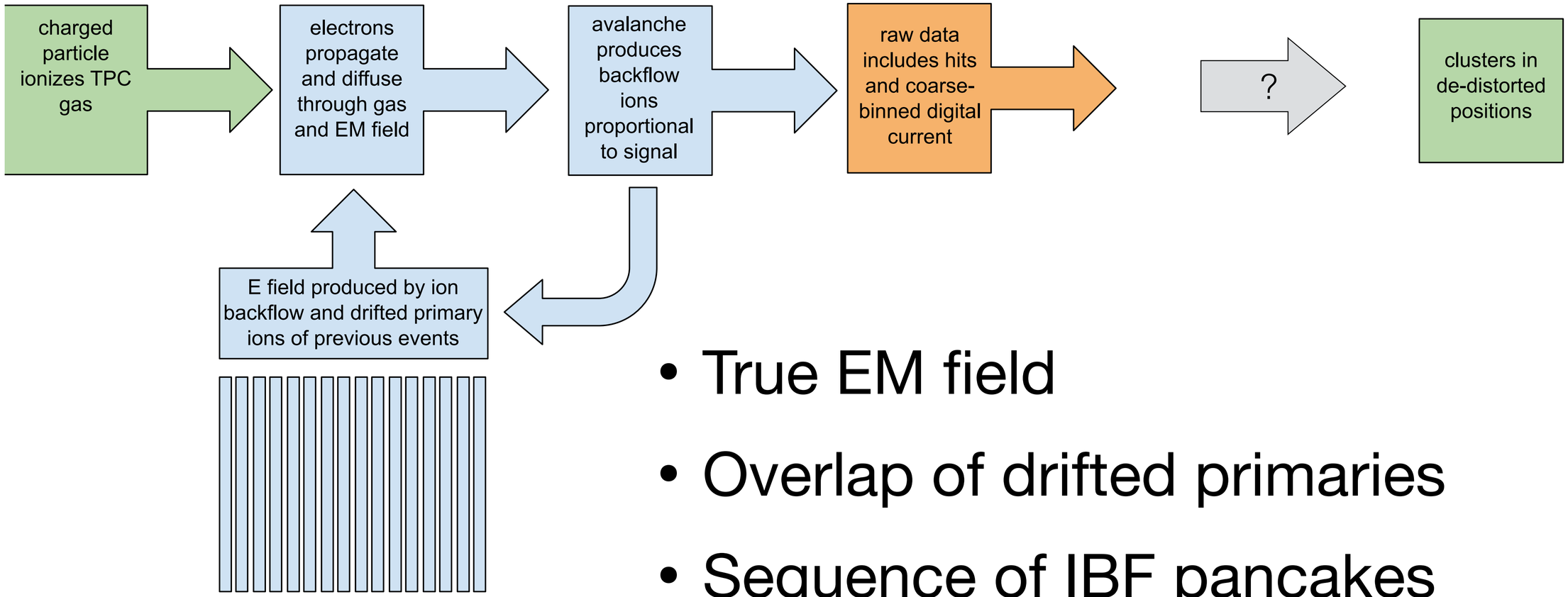

- True EM field
- Overlap of drifted primaries
- Sequence of IBF pancakes

Center for Frontiers in Nuclear Science

Correcting Distortions

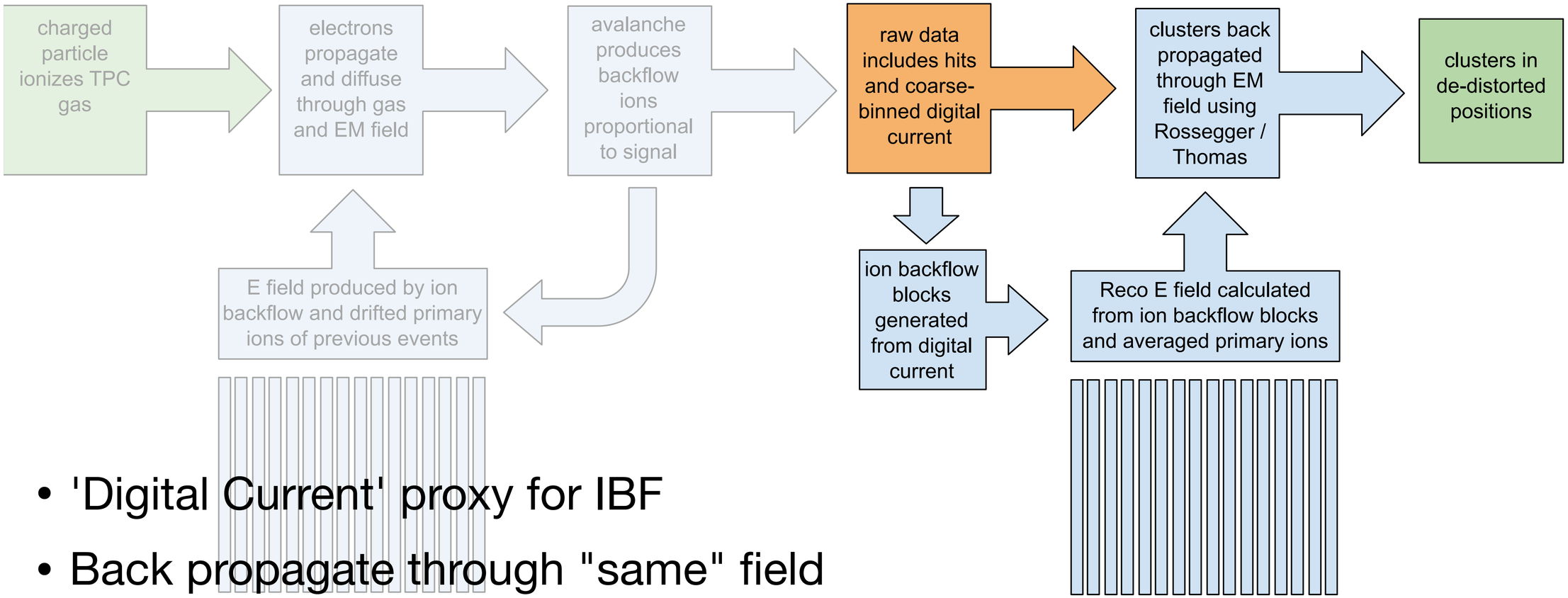

- 'Digital Current' proxy for IBF
- Back propagate through "same" field
- Challenge: Do it fast enough for timely reconstruction

Stony Brook University

Center for Frontiers in Nuclear Science

Simulating Distortions

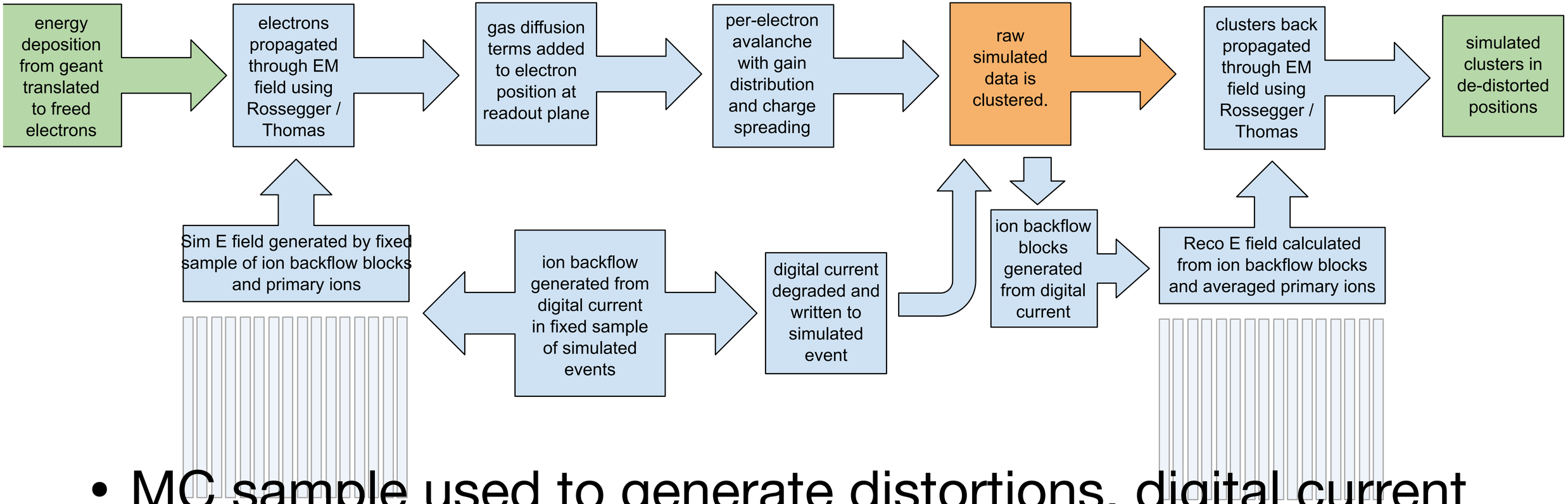

- MC sample used to generate distortions, digital current fed into reconstruction algorithm

Stony Brook University

Center for Frontiers in Nuclear Science

Propagation Model

- Divide TPC into Pieces of Cake (POC) grid
- Pre-compute cell-to-cell Green's functions
- Use SC distribution to sum field vector per cell
- Propagate each electron using 2nd order Langevin
  - Depends only* on integrals of fields along z.
  - Can interpolate between r,Φ adjacent cells

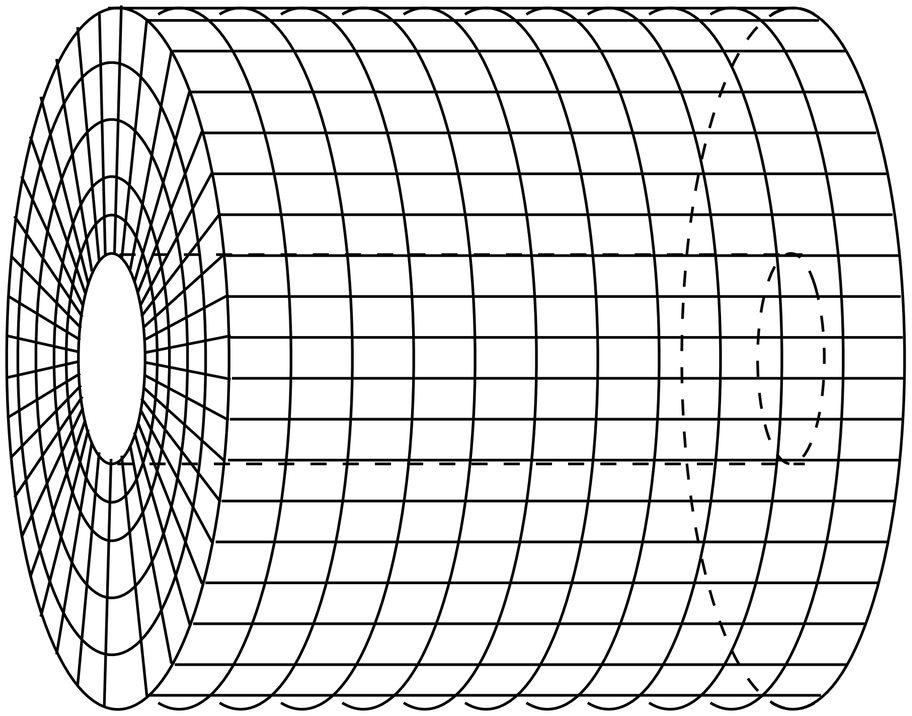

Stony Brook University

Center for Frontiers in Nuclear Science

Progress and Goals

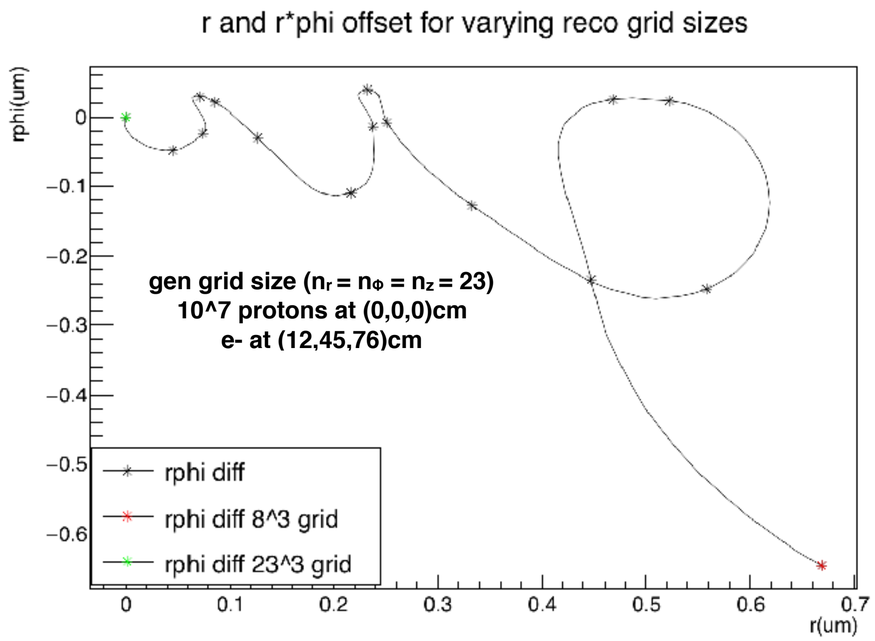

- Now: Reconstruction framework developed, convergence tested using simpler boundary conditions
- December: Develop idealized case in full sPHENIX model
- 2020: Develop full calibration framework, study simulated calibration performance with diffuse and directed lasers

Stony Brook University

Center for Frontiers in Nuclear Science

Summary

- Developing scheme to properly account for wide class of TPC field distortions
- Leads to development of calibration and correction schemes applicable to high luminosity (EIC) environments where TPC is an attractive detector option

Stony Brook University

Center for Frontiers in Nuclear Science

Presentations and Publications

- June 2019 Status and Goals of the sPHENIX Detector (RHIC AGS Users Meeting, BNL)
- April 2019 sPHENIX: Status and Goals of RHIC's New Detector (LNS Lunch Seminar, MIT)

- Y. Wang, R. Corliss, R. G. Milner, C. Tschalär, and J. C. Bernauer. A helical-shape scintillating fiber trigger and tracker system for the DarkLight experiment and beyond. Nucl. Instrum. Meth., A935:1–7, 2019, 1812.01369.
- S. Lee, R. Corliss, et al. Design and Operation of a Windowless Gas Target Internal to a Solenoidal Magnet for Use with a Megawatt Electron Beam. Nucl. Instrum. Meth., A939:46–54, 2019, 1903.02648.
- R. Johnston et al. Realization of a Large-Acceptance Faraday Cup for 3 MeV Electrons. Nucl. Instrum. Meth., A922:157–160, 2019, 1811.12196.

Stony Brook University