WP4 - Crab Cavity Summary

A. Ratti

LBNL

Outline

- (Brief) History and overview
- External Review – May 5 and 6
- Collaboration meeting – May 7 and 8
- Next steps

Cavity Development Timeline

- Conceptual design, feasibility study and system development
  - 2003 -> 2008
- Proof of Principle Cavities
  - 2009-2014
- Cavities and Cryomodules for a validation test in the SPS
  - 2014 - 2018
- HL-LHC system
  - 2017 - 2023

Crab Cavities in the LHC

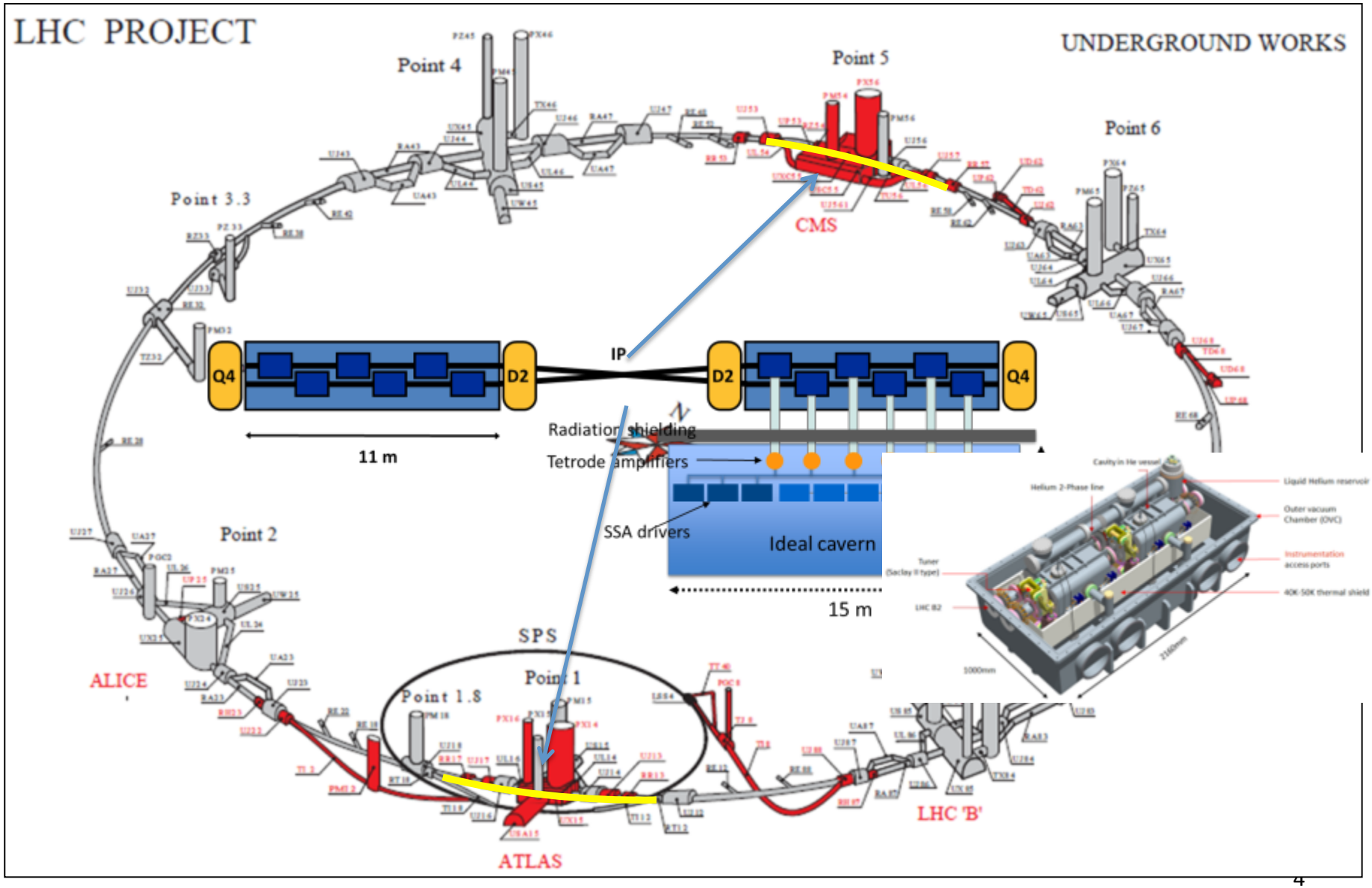

General Overview

- Baseline parameters
  - Voltage = 3.4 MV/cavity
  - Frequency = 400.79 MHz
  - Cavity aperture: 84 mm diameter
  - Operating Temperature= 2 K
  - $Q_L = 5 \cdot 10^5$ (assuming $R/Q = 400$)
  - RF power = 40 kW tetrode/cavity

- **Crab cavity prototypes**
  - 3 designs being taken forward to the SPS test

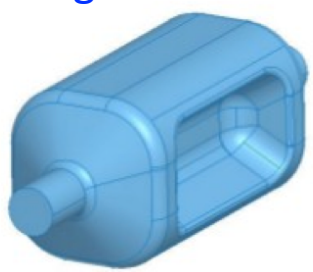
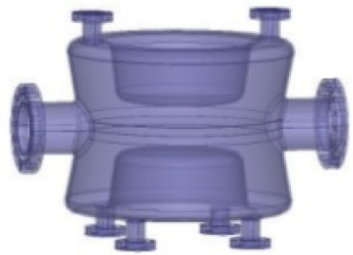

- **SPS Crab Cavity Cryomodule**
  - 2 cavities installed in 1 cryomodule
    - cavities of same type
  - 3 different cryomodules
    - should be interchangeable

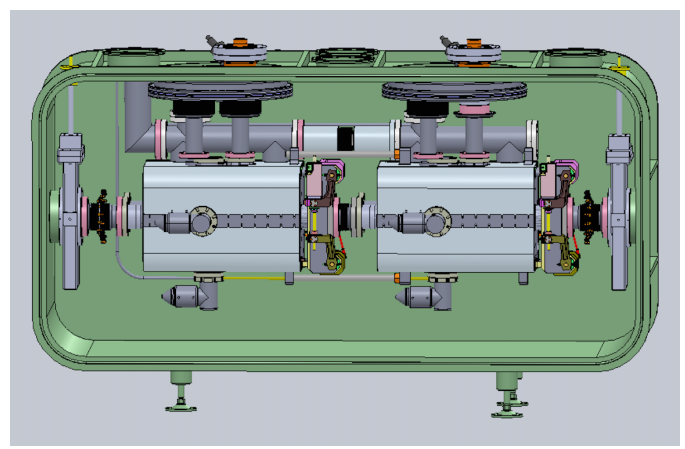

PoP Program

- Developed and built a Proof of Principle program
  - Essential to validate the feasibility of such compact structures
- Positive results from the PoP program allow us to plan an implementation in the LHC
- All three design candidates
  - Build by US industry (Niowave)

RFD 2K Test Results

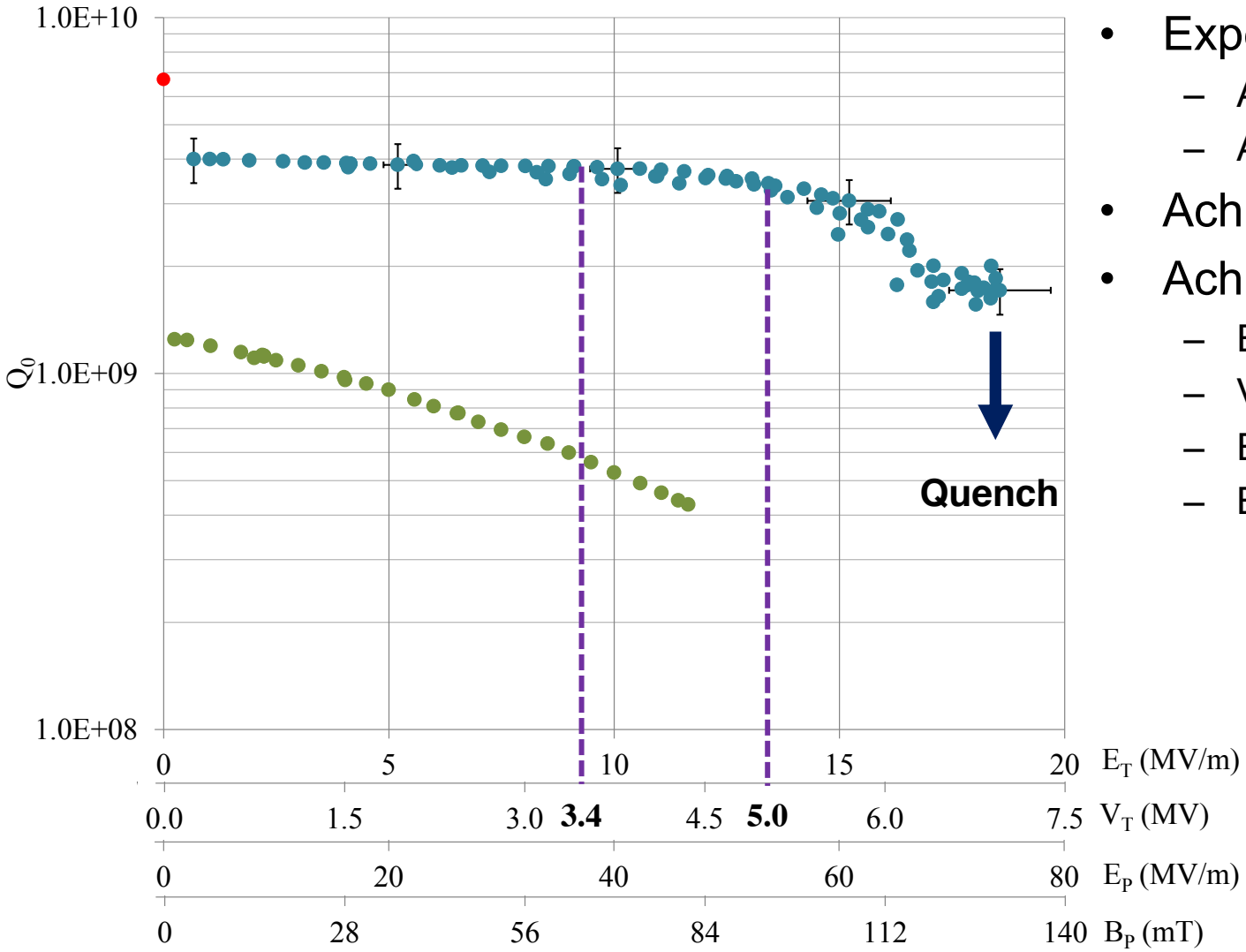

- Expected $Q_0 = 6.7\times10^9$
  - At R_S = 22 nΩ
  - And R_{res} = 20 nΩ
- Achieved $Q_0 = 4.0\times10^9$
- Achieved fields
  - E_T = 18.6 MV/m
  - V_T = 7.0 MV
  - E_P = 75 MV/m
  - B_P = 131 mT

RFD 2K Test Results

- Obtained at first try, with little difficulties
  - Weak MP barriers at low field
- Achieved field > 2x what required
- First proof of feasibility
  - Reported at CM in Napa April 2013

PoP cavity: results from cold test at BNL

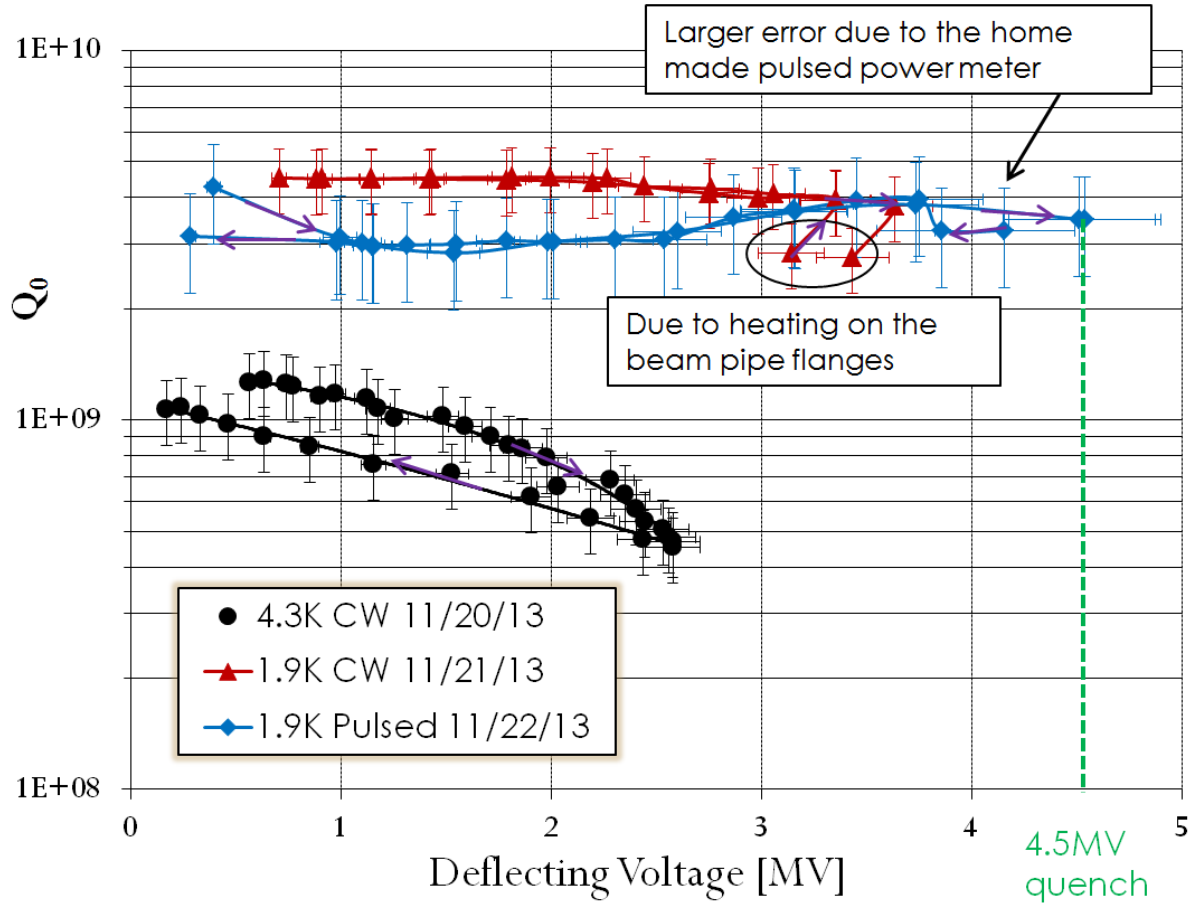

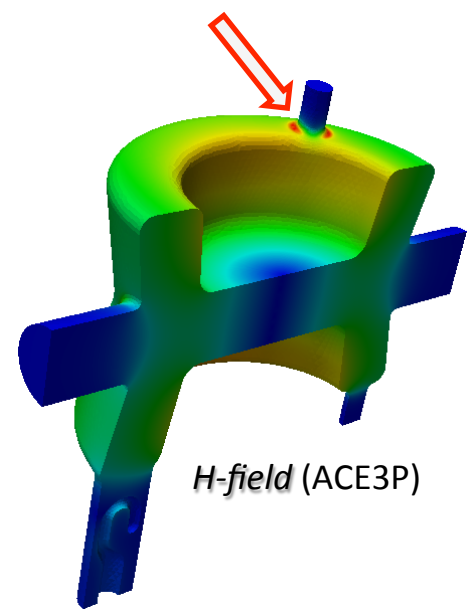

- In CW mode, temperature of beam pipe flanges increase.
- Temperature increase on pickup port blending area.
- Quench field at ~110mT, with peak E field at 52.8MV/m

4-Rod Test Results

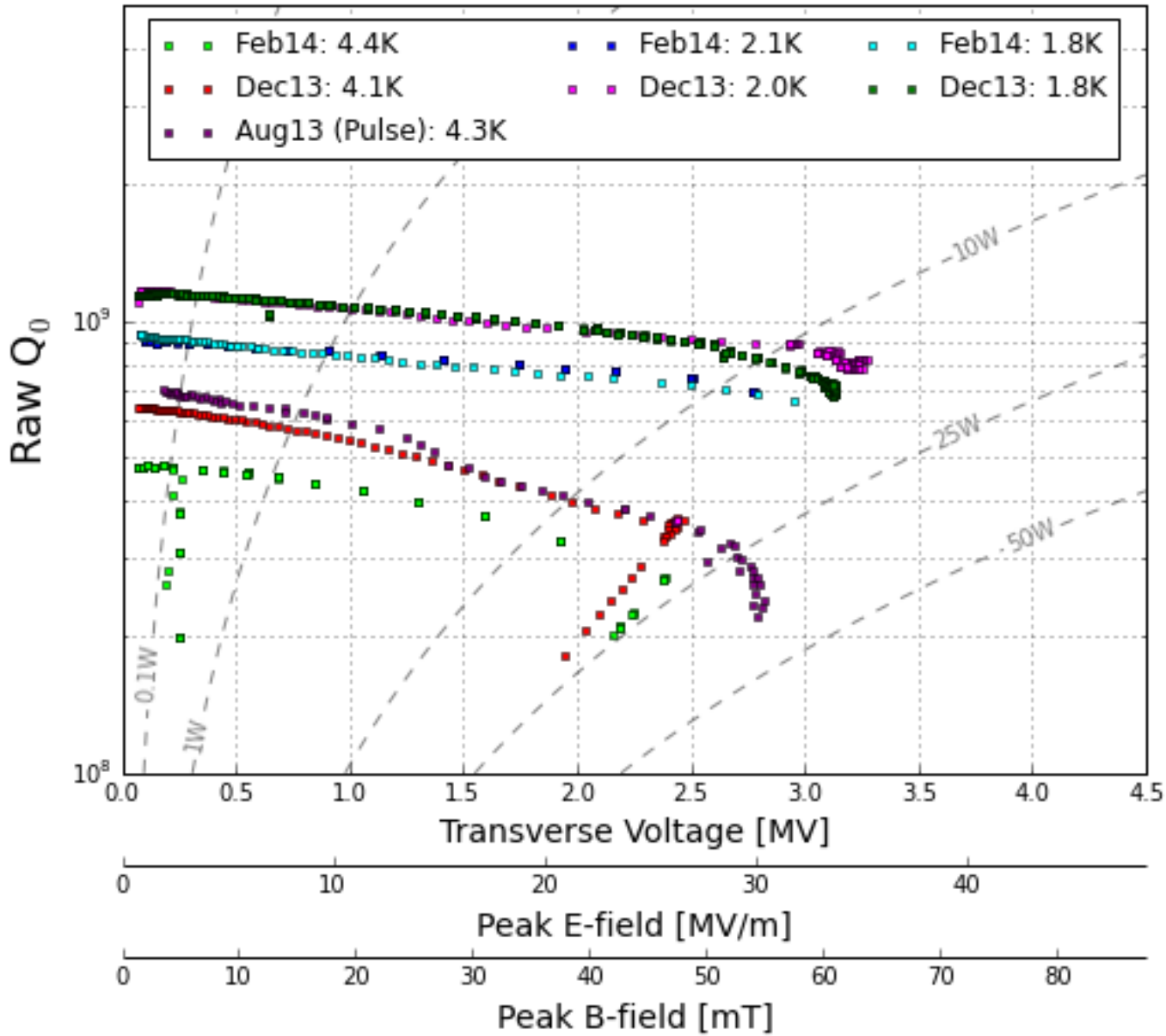

Cavity reached operating gradient but has a high residual resistance.

PoP Summary

- All PoP cavities reached the required field
- All measured higher than expected surface resistance
  - Mostly due to flanges and similar issues
- Vertical Test Measurements
  - Caution about projecting same performance in an operational cryomodule
- Good margins give good hope
- LARP PoP Cavities moving to CERN for testing in SM18
  - 4-Rod tested in SM18 already
- Design teams moving to SPS prototypes

SPS Tests

- Key step towards a final decision on implementation on HL-LHC
  - Crab scheme with protons never been done
  - Big learning opportunity
    - MPS, LLRF, HOMs…
- LHC requirements much more extensive and still rapidly evolving
  - A more detailed specification will be required to design a system for the LHC

High level schedule

2013-2014	2015-2016	2017-8	2018-2022	2022-3
Cavity Testing & Prototype Cryomodule	SPS Cryomodule Fabrication	SPS Beam Tests	LHC Cryomodule Construction	LHC Installation

Current focus of most groups is fabrication and SPS testing

SPS Integration Plan

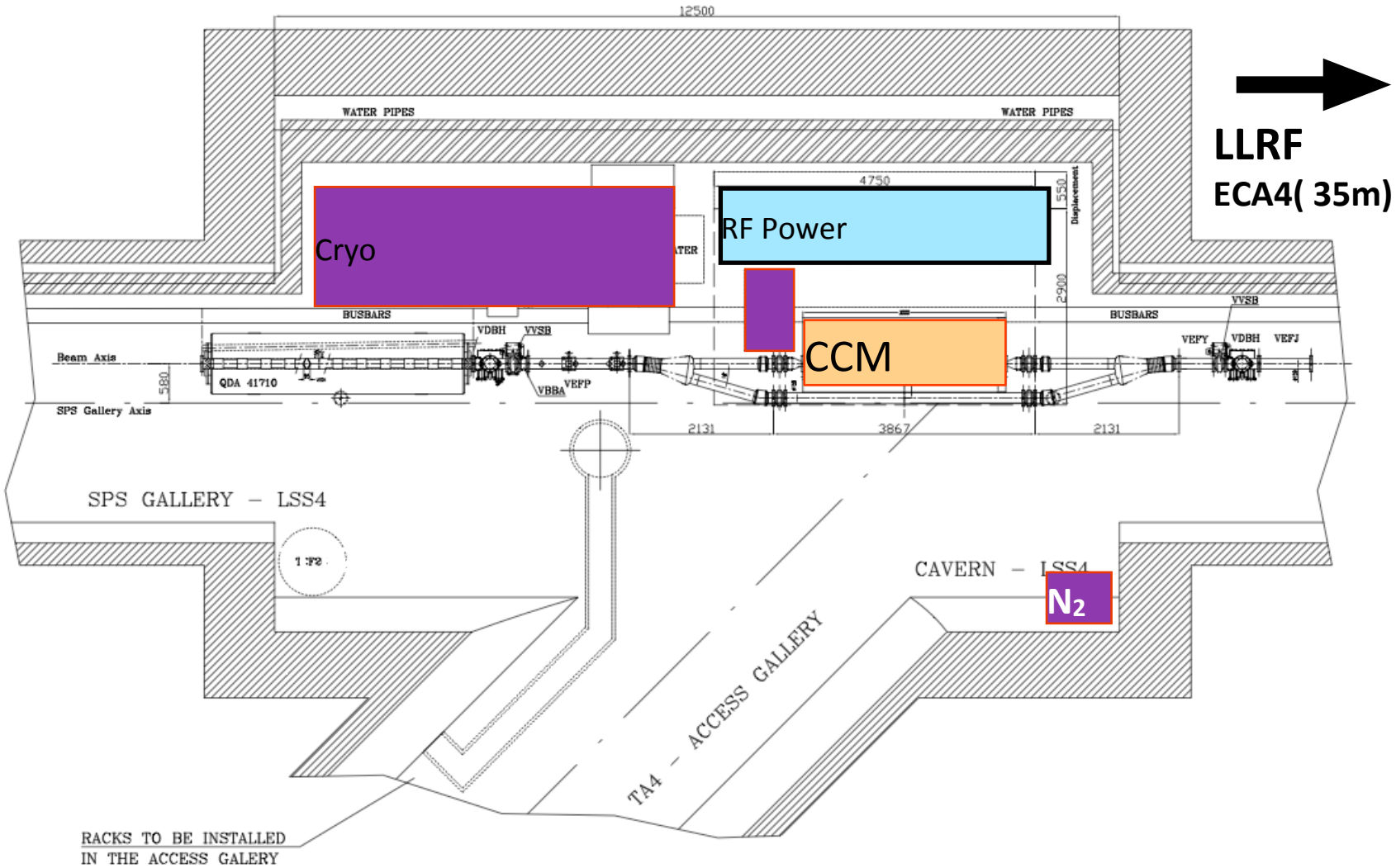

SPS tunnel location

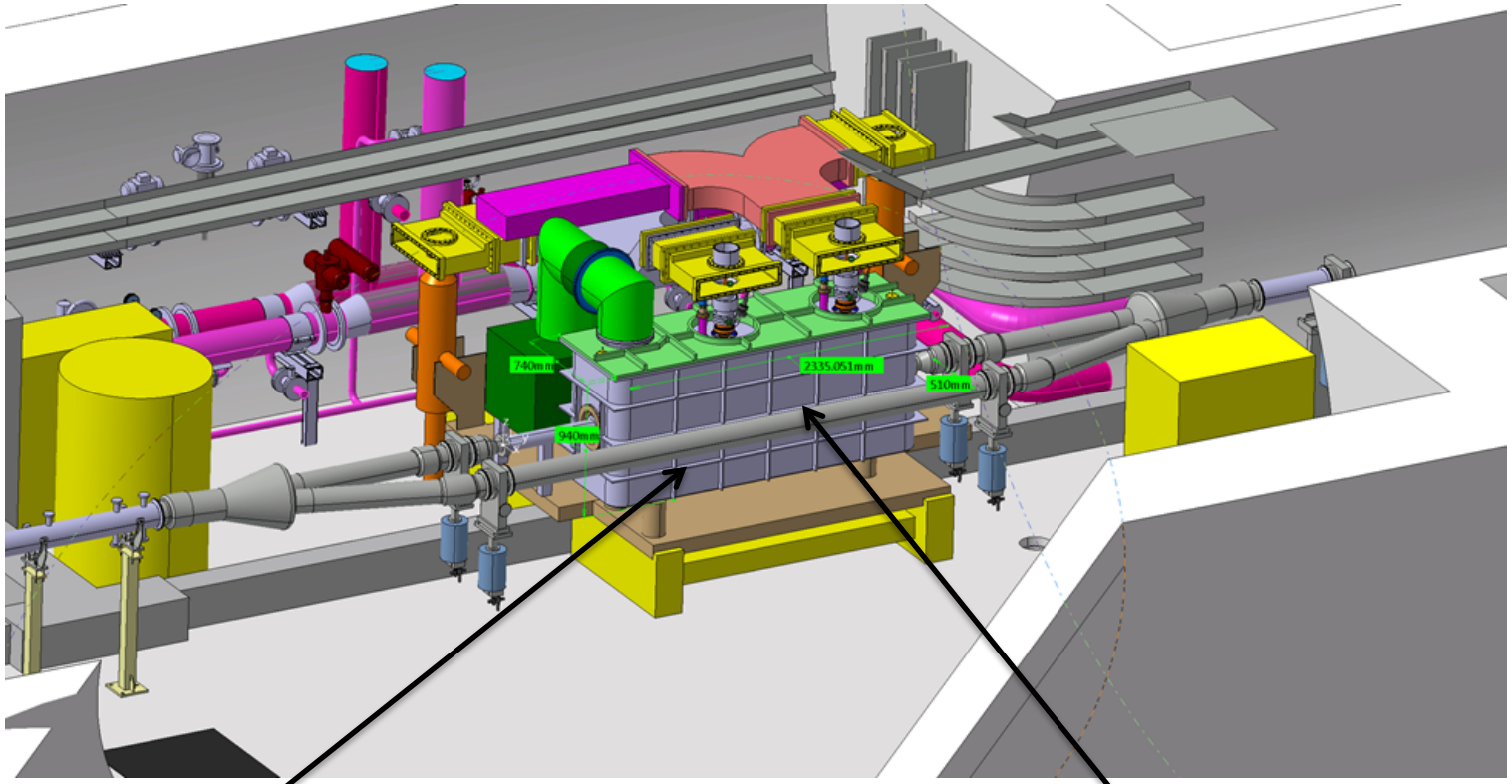

Cryomodule

Bypass beamline

SPS Integration Issues

- SPS operation must be independent of crab operational availability
  - Crab Cavity module switchable from in-beam to out-of-beam position
  - Need to increase opening angle of Y-chamber => New Y-chamber design
  - cold and helium tanks full
  - Duration: less than 20 mins. Acceleration: less than 0.2g
  - Safety requirement: Movement is a remote operation

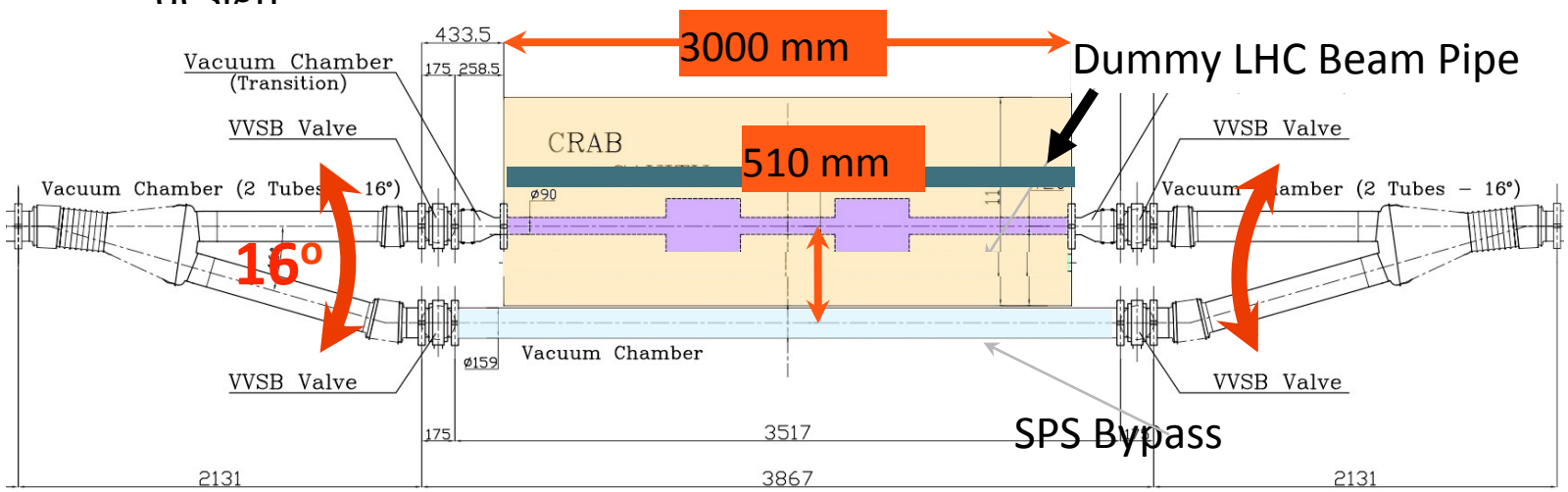

- CM Movement: In out of beam line
  - Cryomodule: moved with cavities

SPS Validation Program: 5 Steps

1. Cavity setup, conditioning, beam injection and initial cavity operation
2. Long Term Effects: Coasting Beam [120 -270 GeV]. Low Intensity
   1. Single + multi-bunch + trains: Emittance growth, Dispersion etc
3. Short Term Effects: Cycling Beam: [26-450 GeV]. Low intensity
   1. Direct crabbing measurements: Head tail monitor
   2. Global and Local Crabbing schemes
4. Machine Protection Issues and Quench studies
5. High Intensity Studies
   – Impedance Studies and Invisibility of detuned cavities

- Cavity operation with beam: Cryo limit of 8-12 hrs operation

Each MD step: 3 slots of 8hrs of beam => 24 hours of beam per cavity

Test of 2 cavities: 10 days of dedicated MD time spread over 2 years

This is ~1/3 of allocated SPS MD beam time

Cryostats

- All evolve from the concepts developed by SFTC (Shrikant Pattalawar)

- Adopted for all three cavity designs
  - Not plug-and-play, but very similar
  - LARP cavities through a strong engineering effort at CERN

Cryomodule in SPS

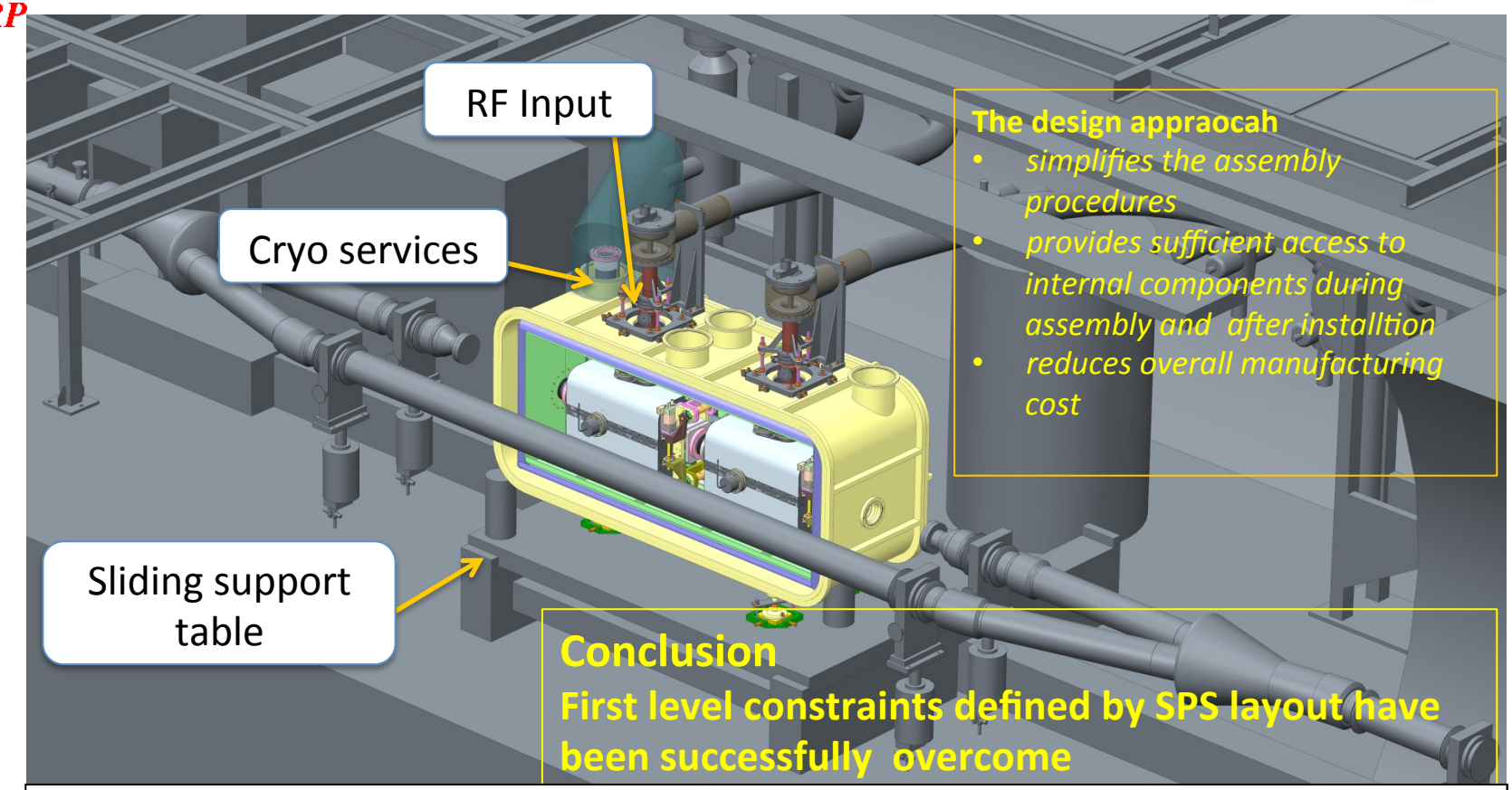

The design appraocah

- *simplifies the assembly procedures*
- *provides sufficient access to internal components during assembly and after installtion*
- *reduces overall manufacturing cost*

Conclusion

First level constraints defined by SPS layout have been successfully overcome

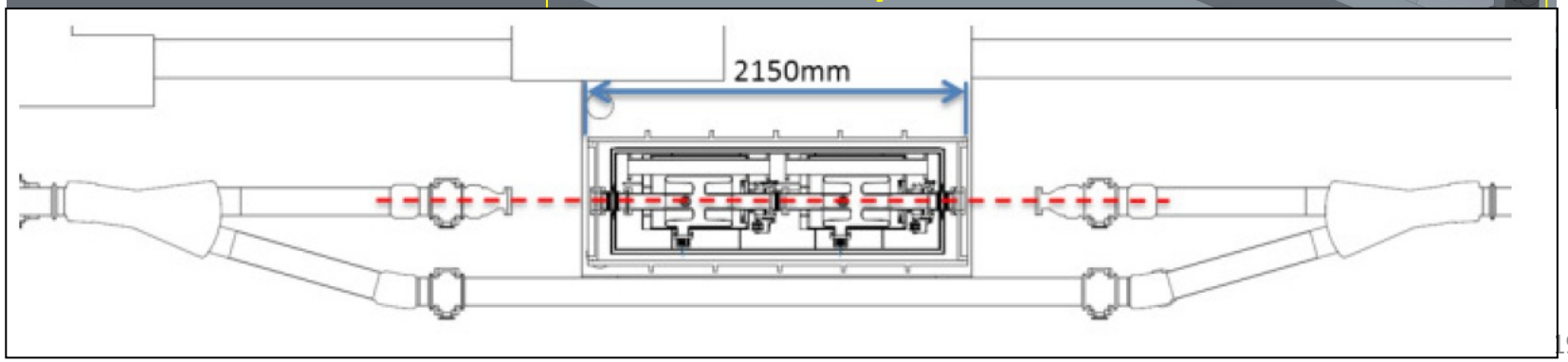

Common Design Approach

4-Rod

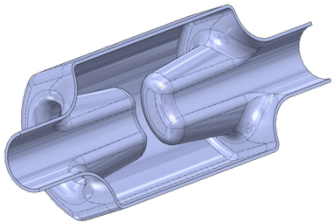

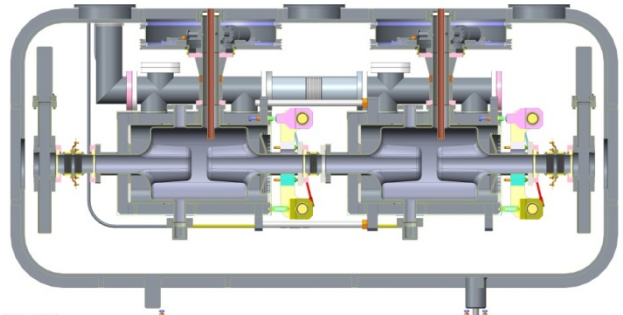

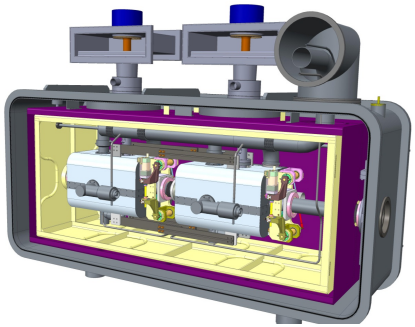

Double QW

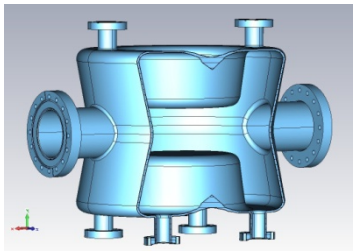

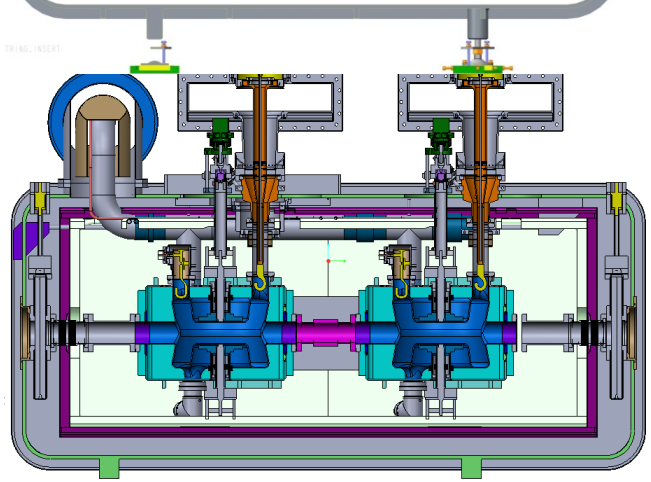

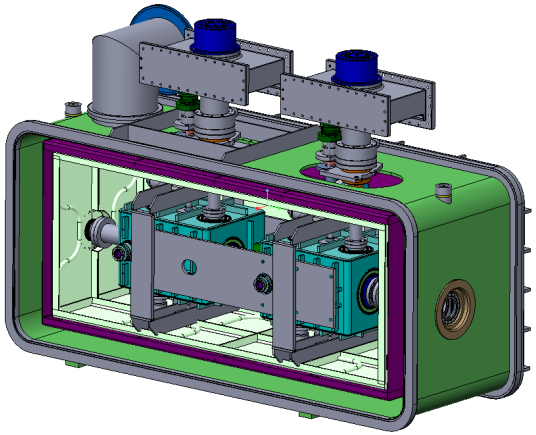

RF Dipole

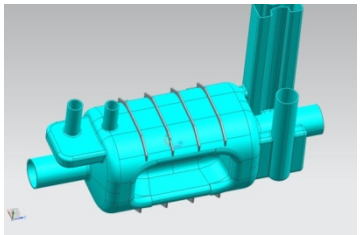

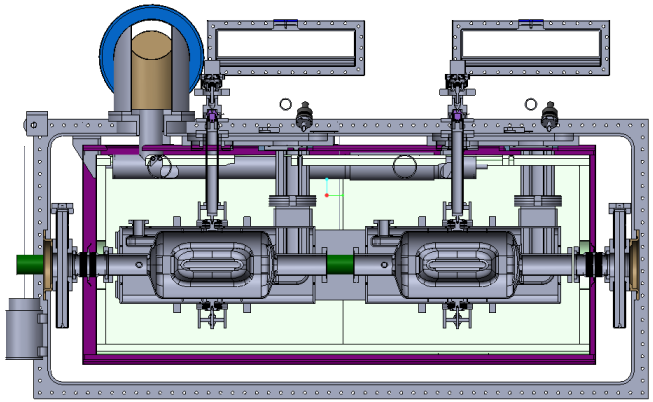

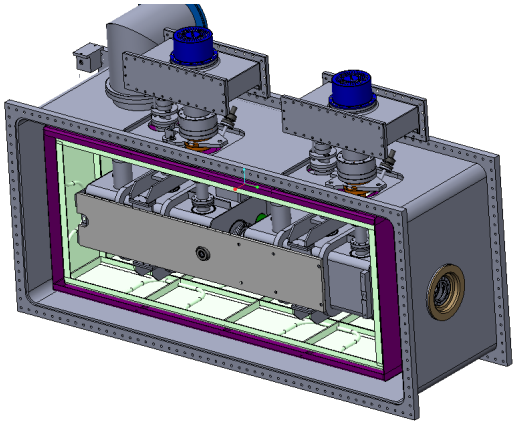

Vessel Manufacture

All joints in Helium vessel to be TIG welded

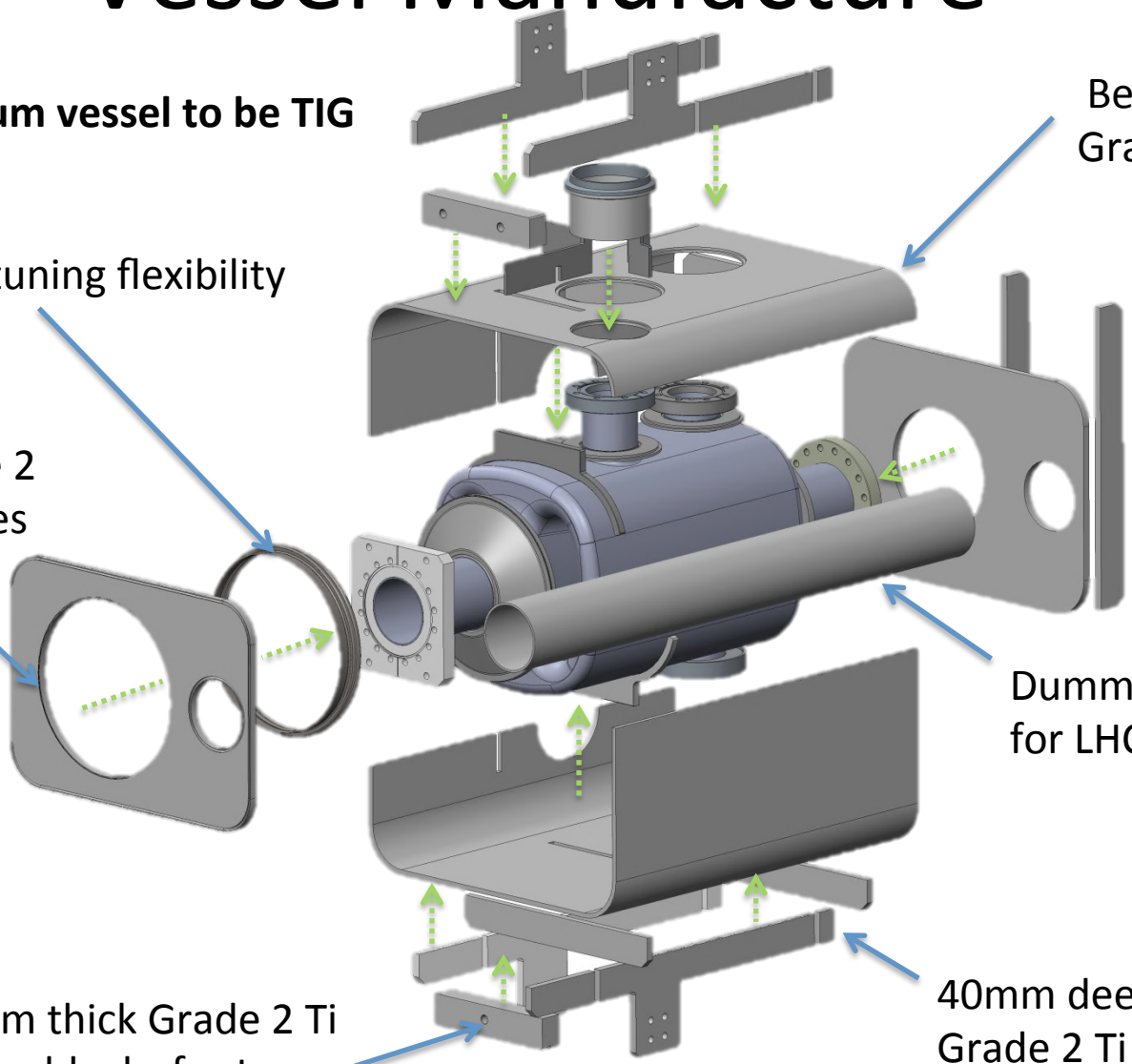

Cavity String

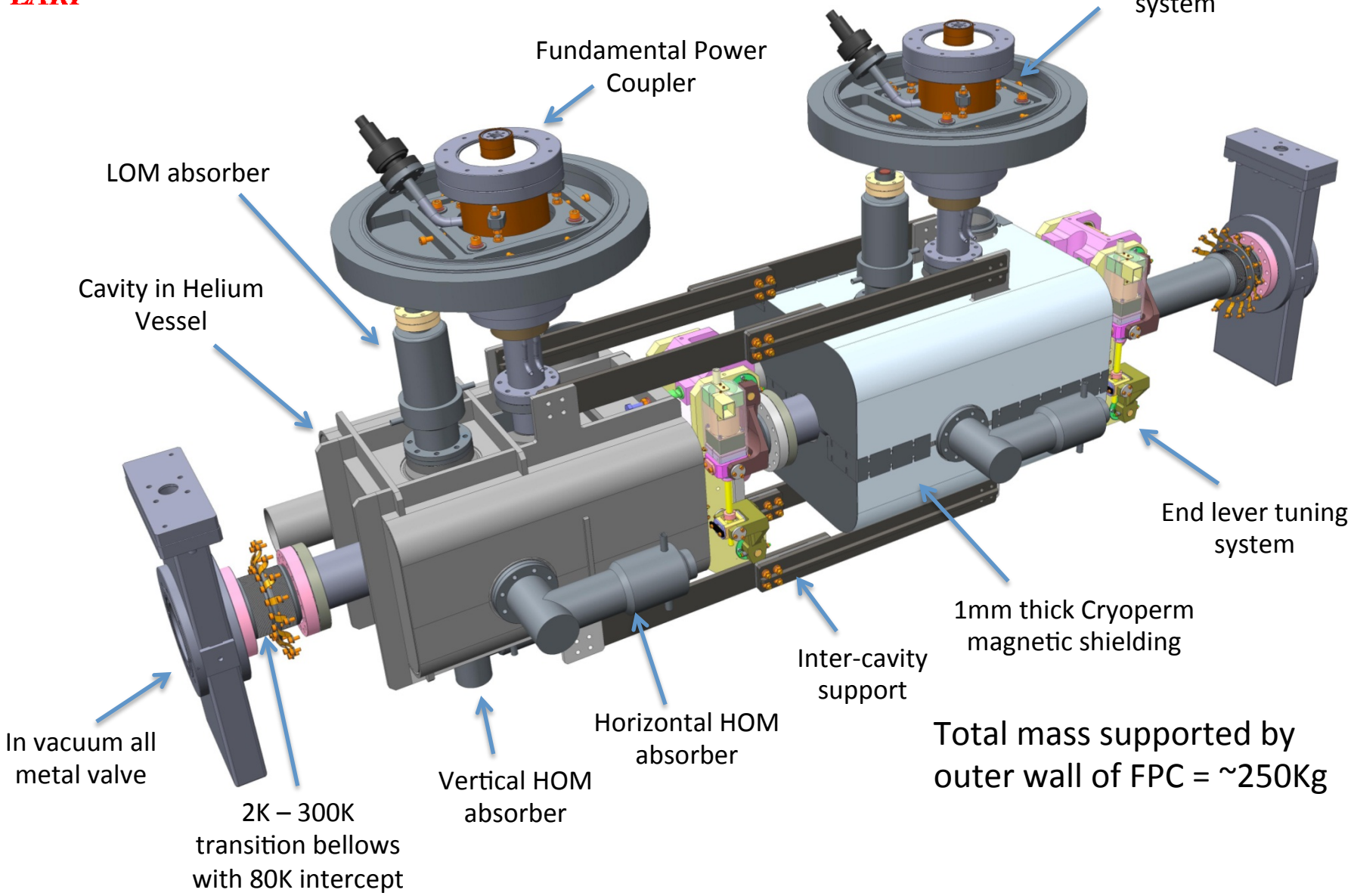

Total mass supported by outer wall of FPC = ~250Kg

Low order mode coupler

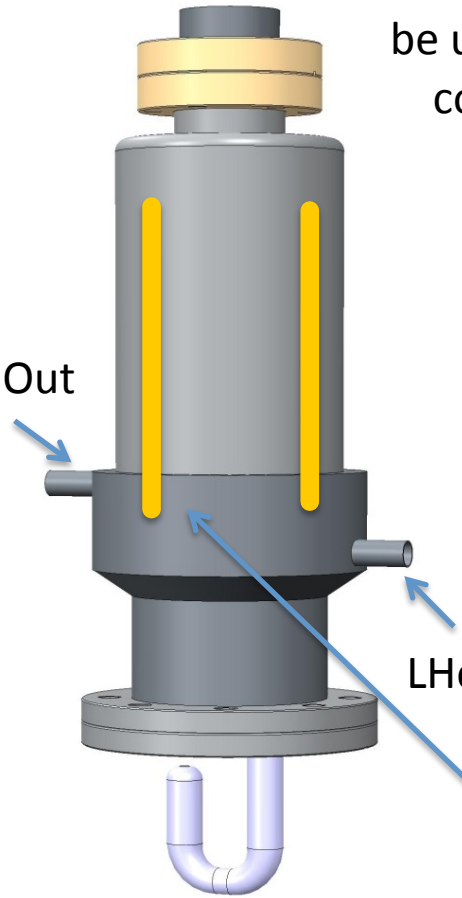

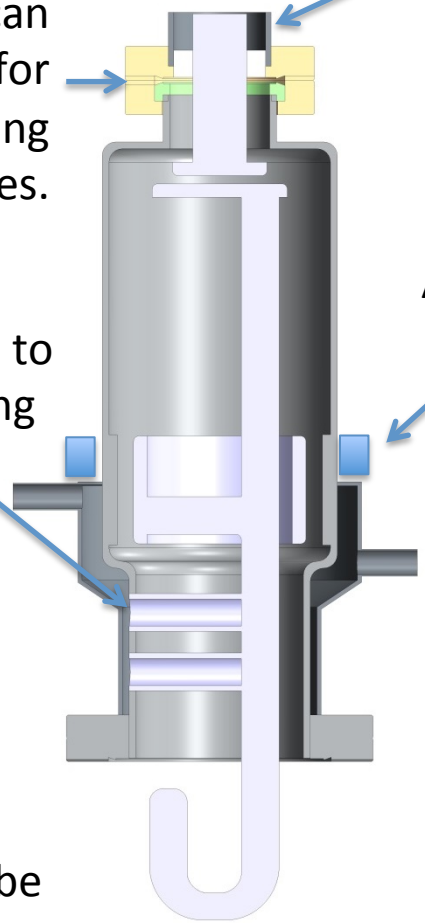

Connection to CERN cable (details to be added)

Various thickness gaskets can be used here to account for cooldown/manufacturing tolerances.

A clamp will be used here to give tuning

Tubes used for stubs to give additional cooling

2-Phase Out

LHe bottom fill

Copper straps could be used from He bath to outer can, if required

HOM Damper approaches

- Waveguide
  - Intrinsic rejection of the fundamental frequency
    - Below cutoff
  - More complicated fabrication and cleaning

- Coaxial
  - Requires a dedicated high pass filter to reject fundamental frequency

RFD HOM Damper Approaches

- WG-coax adaptor then to load
- Or WG directly to load

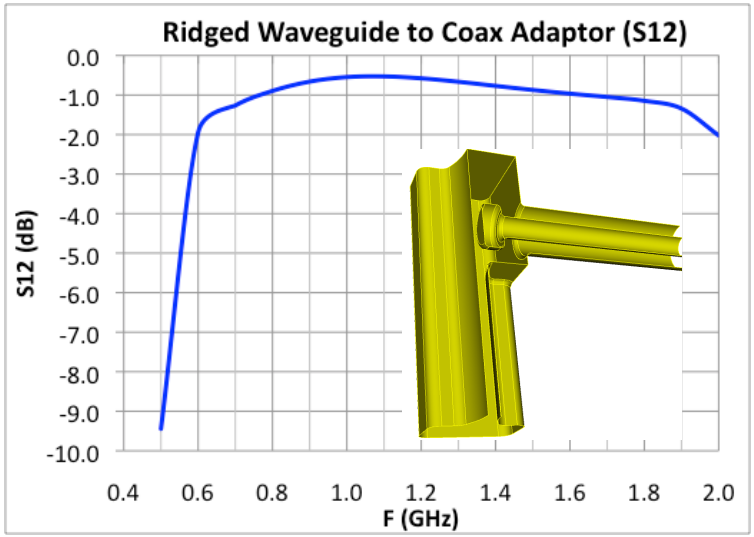

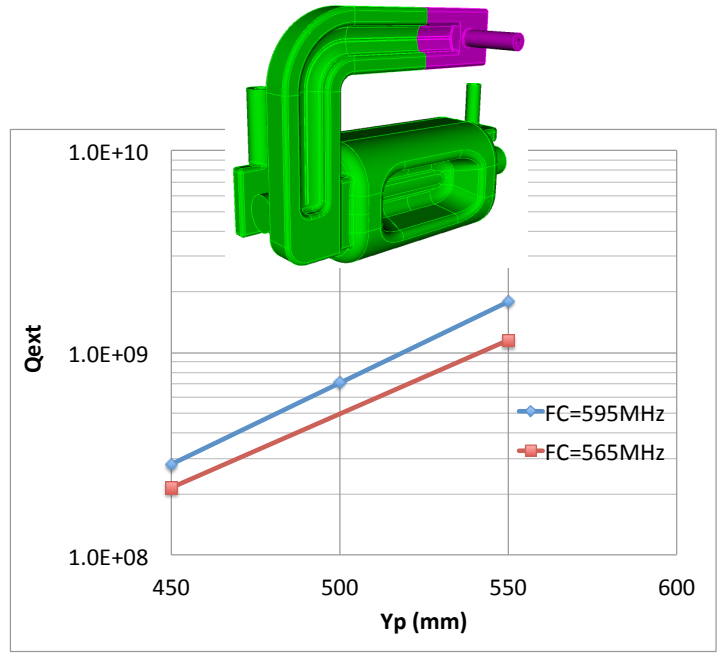

- Ridged waveguide needs to have enough length to reduce power leakage
- A section of WG needs to be SC to reduce wall heating due to evanescent field
- May consider bend WG horizontally to save vertical space

Improvements for the HOM coupler and filter

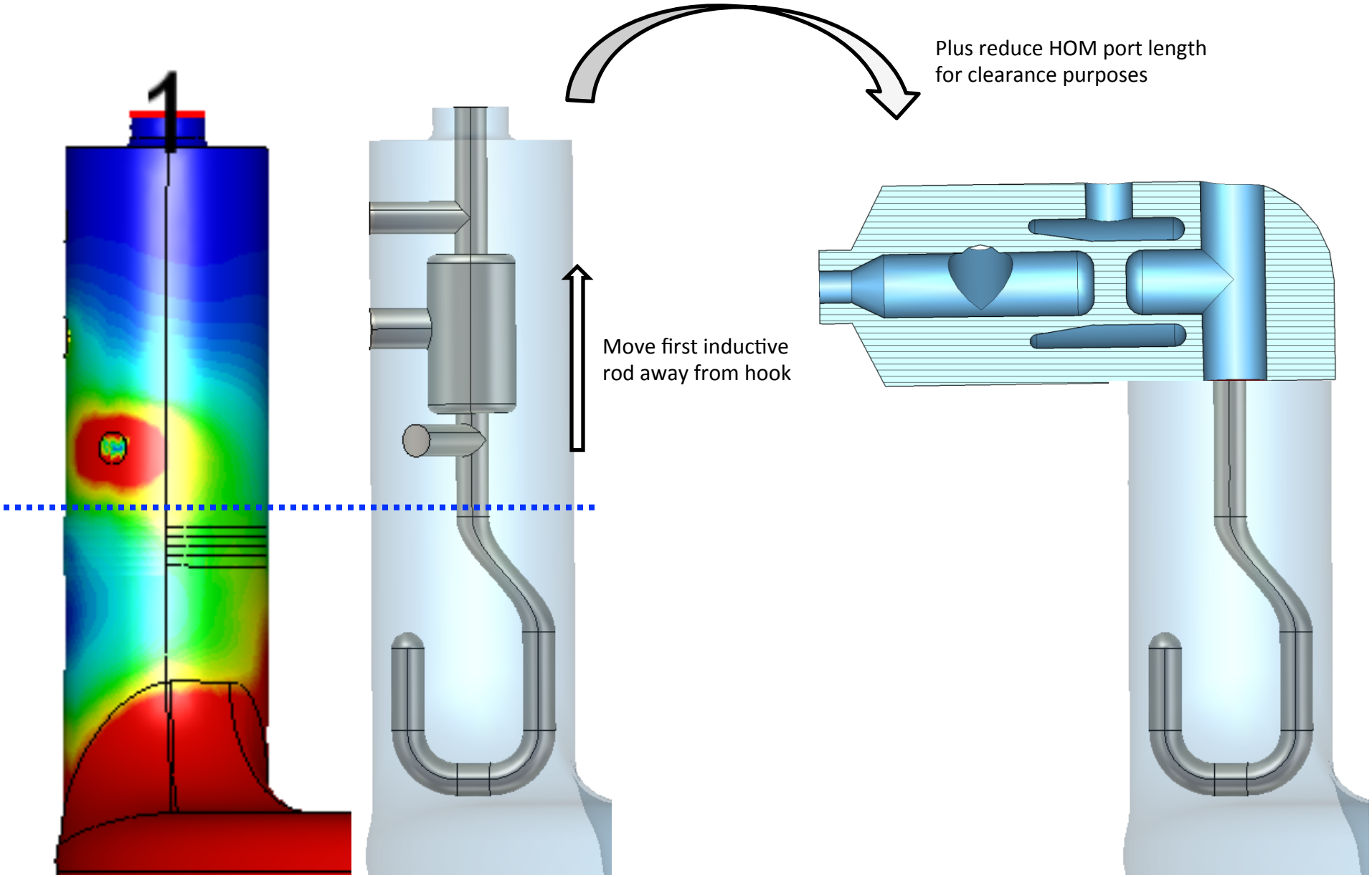

FPC – new design

- Pseudo-conical air extension cooled with forced air
- Even if against CERN's rules regarding joining, as no other way to do it, water cooled antenna
- Mandatory vacuum gauge for coupler protection
- No more arc detector window neither e- antenna to ease integration

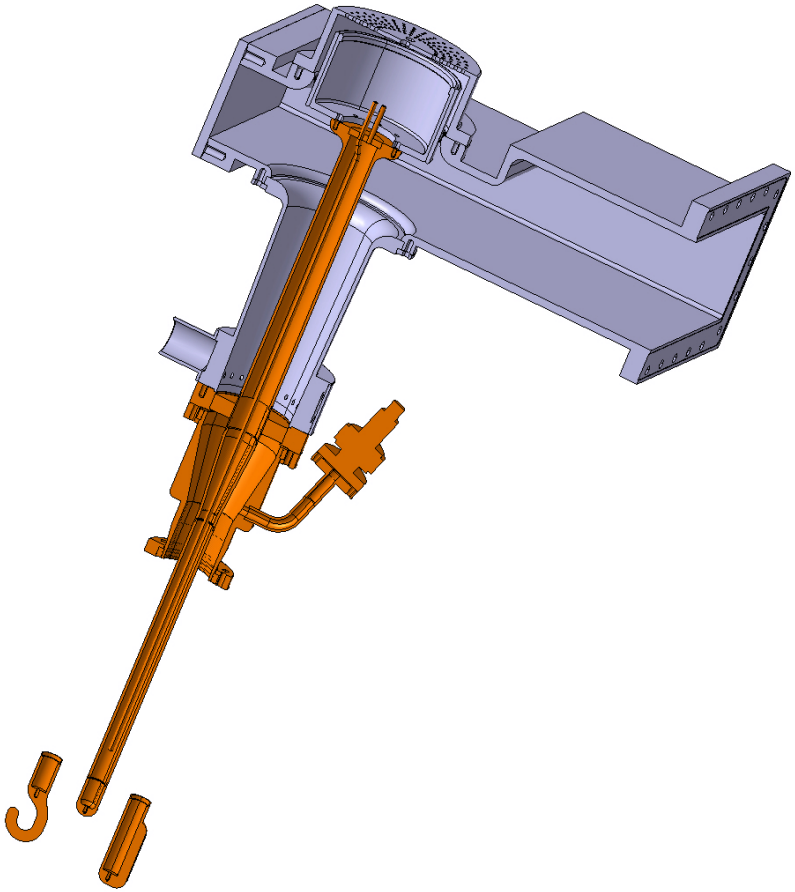

Reducing power dissipated on FPC coupler

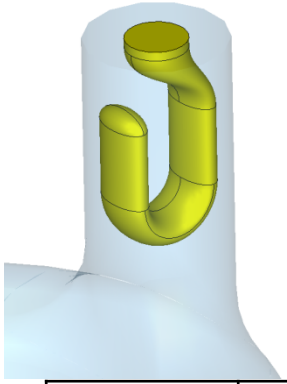

LATEST NEW VERSION
Increased f_m to enlarge coupling. Hook does not need to penetrate so deep into port tube.

Q_{ext}^{FPC}	--	4.87e5
P_0^{FPC}	W	106

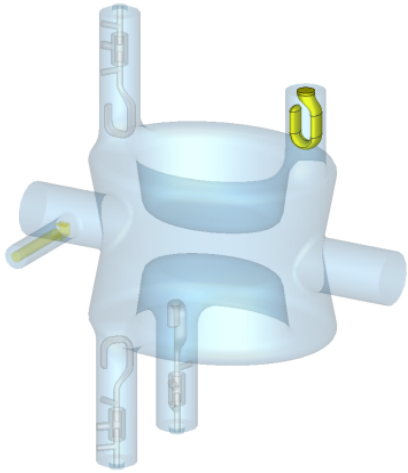

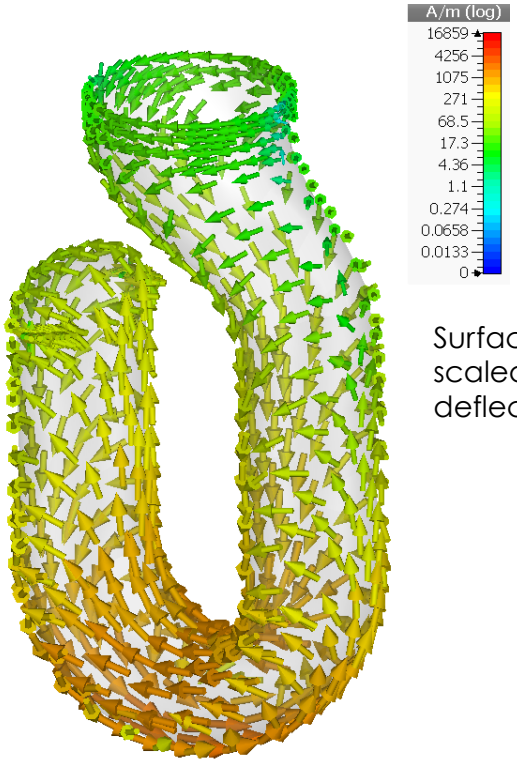

Bpk=10mT

Surface current (A/m) scaled to 1.038MV deflecting voltage

FPC development

Using a hook coupling instead of a probe (Horizontal crabbing)

- High RF surface heating on the probe shape antenna
- Replaced with a hook coupling, optimized to reduce RF heating

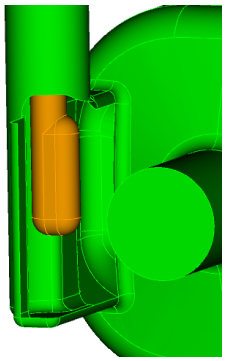

676 W

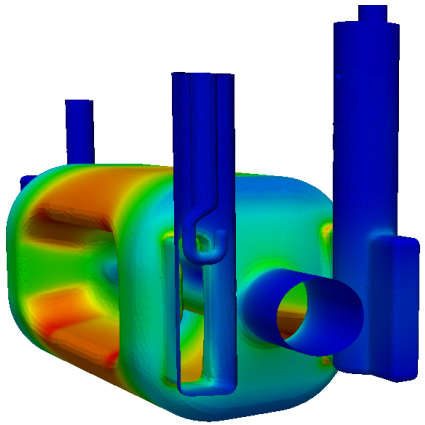

178 W

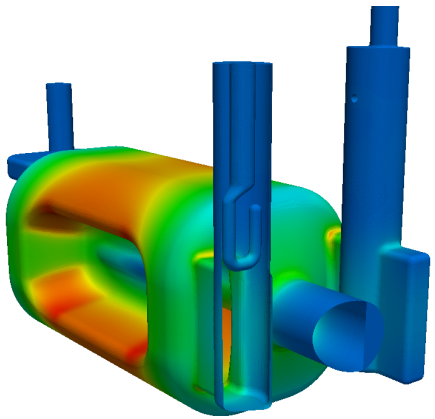

69 W

Hook heating at 3.4 MV deflecting voltage (Horizontal crabbing)

(Less heating and better cooling for Vertical with a probe)

Tuners

(slow) push-pull ~ 0.5mm

for cavity transparency, freq drift along SPS energy range and suppression of coupled bunch instabilities

(fast) piezo ~ 30 μm

for Lorentz detuning and microphonics

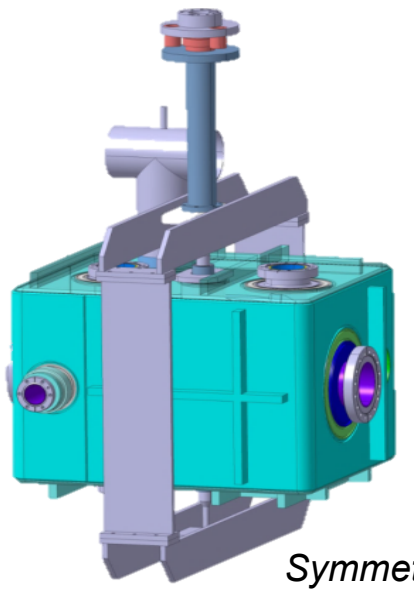

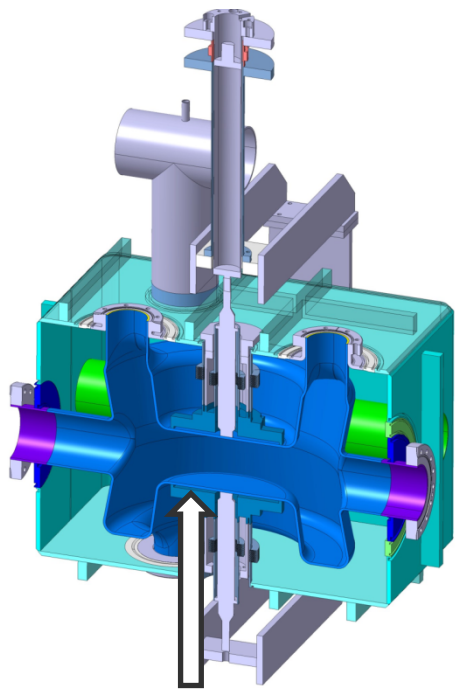

Symmetric actuation onto both central plates

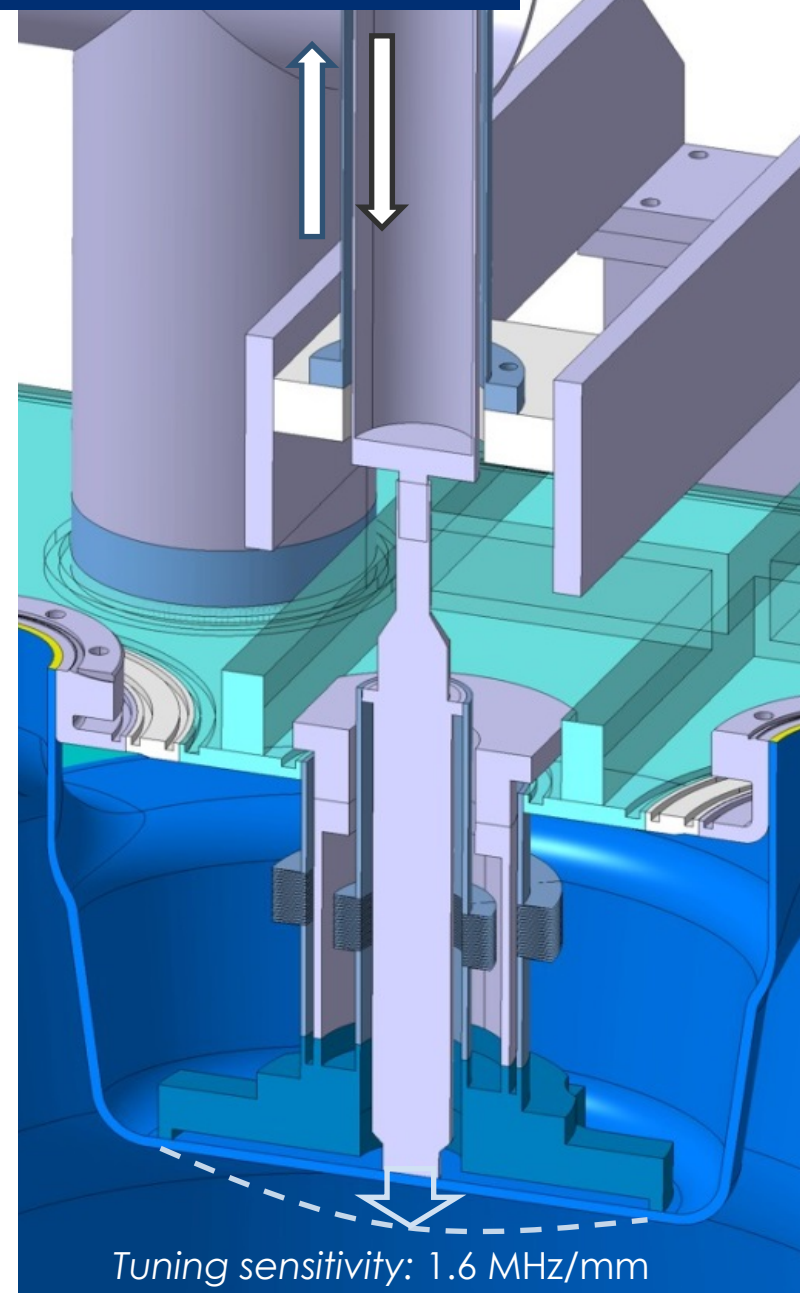

RFD tuners in H and V mode

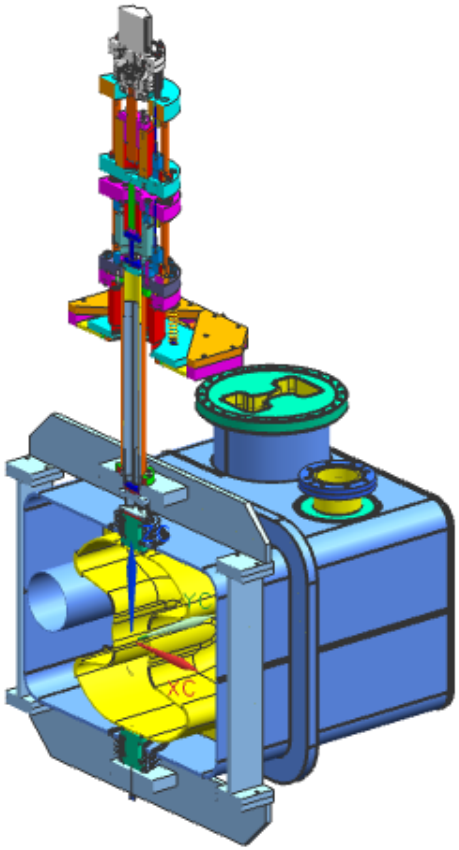

Horizontal crabbing

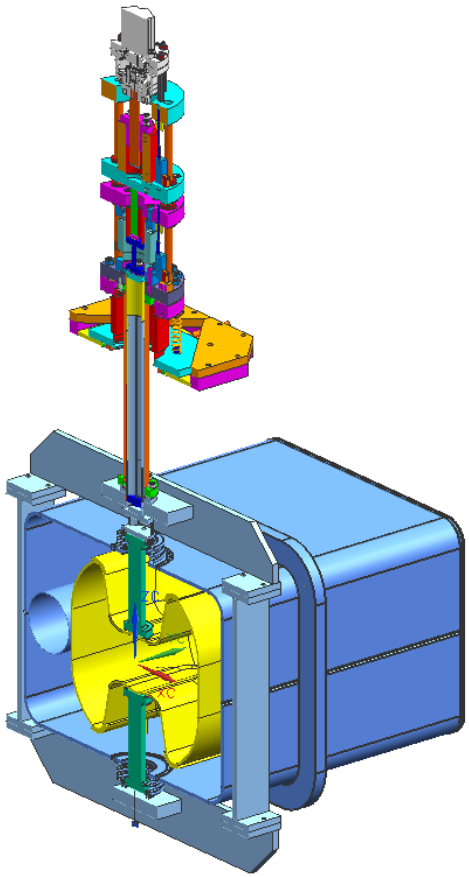

Vertical crabbing

Impedance Considerations

- It would be useful to **collect all updates on geometries** and resonant parameters of all crab cavities, which is not the case so far.

- **Impact of 2 crab cavities on SPS beam impedance seems limited.**

- **Impact on LHC beam impedance is predicted to be significant** in both longitudinal and transverse planes (16 cavities + very large transverse beta functions), despite the large effort to minimize the impact by the design teams.

- We have to admit that there are a lot of unknowns concerning what will limit us for HL-LHC, and setting impedance limits is therefore tricky.

- **Current longitudinal limit for all new LHC hardware is set to 200 kΩ** (conservative for modes above 600 MHz). **Current transverse limit is set by checking the impact of the new hardware on beam dynamics.**

From Benoit Salvant

LLRF

- The impedance at the fundamental is not a problem, thanks to the RF feedback
- The main RF cavity phase modulation algorithm would lead to an IP transverse position modulation, comparable in size to the beam
- We have formulas for the transverse emittance growth caused by RF noise
  - Early estimates are a bit alarming
  - Clever RF FB techniques will be necessary to achieve a 5% transverse emittance growth rate
  - Detailed studies on the way
- No direct luminosity reduction expected due to the RF noise

Emittance growth due to phase noise

Bandwidth reduction

- A more realistic scenario would involve a significant reduction of the RF FB bandwidth with a corresponding increase in the generator polar loop bandwidth
  - Effectively this is a careful optimization of the LLRF loop parameters based on the specific noise sources
  - But, we have experience in developing appropriate models and tools to achieve this
  - Generator polar loop gain increased by 17 dB, RF FB gain reduced by 10 dB
  - With the modeled power spectral density below, it should be possible to achieve a 5% transverse emittance growth rate

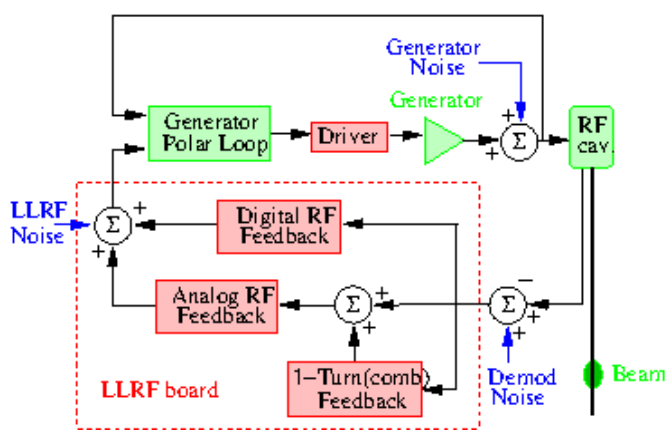

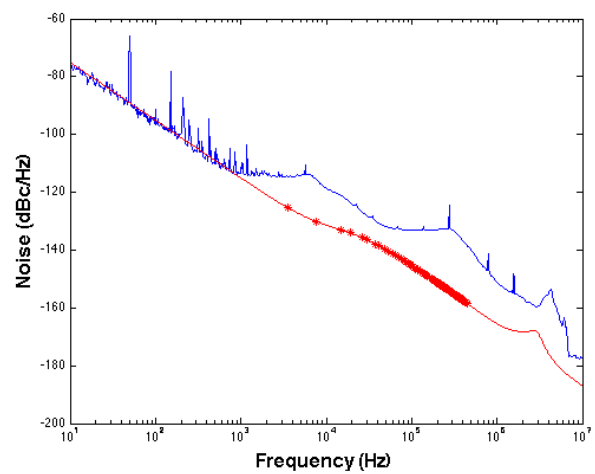

Towards the LHC – Questions

- Specifications:
  - Cavity design (H vs V)
    - is the ability to kick in both planes a requirement for all cavity geometries?
  - Crab in both planes at both IPs? (ie. kissing)
  - What is the *final* operating gradient/kick per cavity? Final aperture?
  - Impedance budget

    --> what is the acceptable n of cavities, HOM damping requirements…
  - Field quality requirement?
- Quench protection and response
- MPS
- Cryomodule configuration and Spares
- Active alignment

Possible LHC configuration

- Single CM with 8 cavities
  - Would need 4 + 2 spare CM (H and V configuration)
    - Needs 16 spare cavities

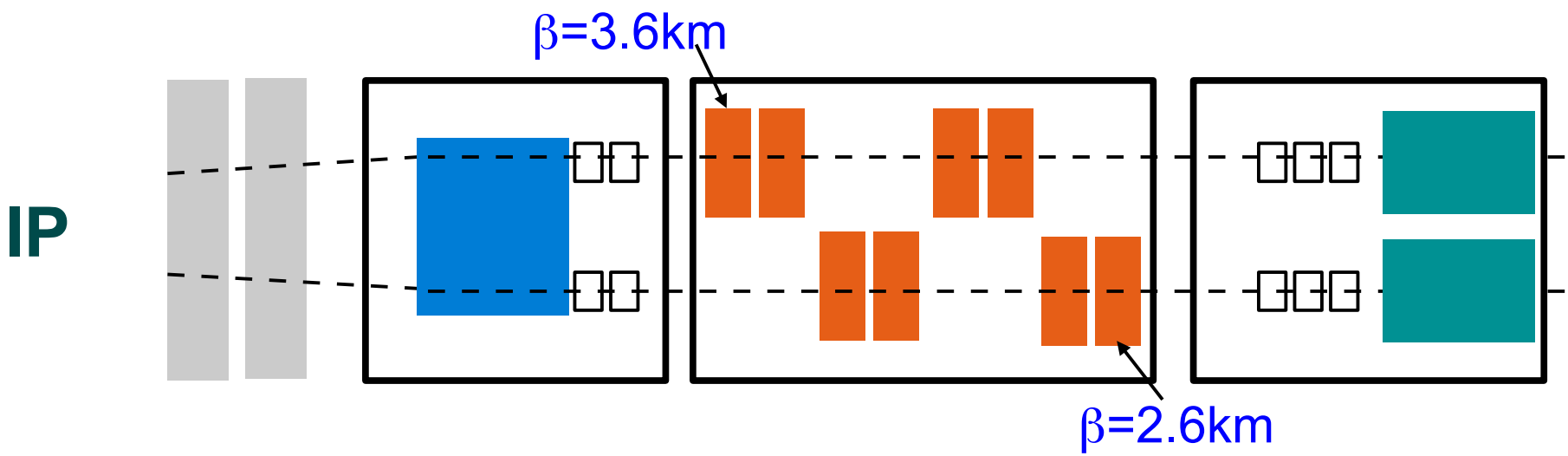

- If we install 2 cavities per CM, we would need 16 CM + 2 CM spares
    - needs 4 spare cavities

CC Design and R&D Features

Property	Spec Value	RF-Dipole	4-Rod	DQW
Features		**Simple, EM design**	**Mechanically stiff**	**Simple and compact, Engineering design**
Issues		HOM coupler	LOM HOM coupler	HOM coupler
V. test achieved	3.4 – 5.1 MV	7	3 ~ 3.5	4.3
E-p (@ 3.4 MV)	smallest	32.6	32.7	41 (prototype)
H-p (@3.4 MV)	smallest	56	77	71
R/Q	highest	427	580	430
Q (test)	> $8x10^9$	$8x10^9$	10^9	$4x10^9$
# HOMs coupler	As few as poss.	2	4 (incl. LOM)	3
HOM QL	102 - 103	$<10^3$	$<10^3$	$<10^3$
HOM couplers		Integral to cavity	Integral to cavity	detachable
LFD (@3.5 MV)		1.6 kHz	0.4 KHz	0.8 kHz
Test problems	None	None	Leak	Quench at HOM flange
MP	None or weak	Weak	Weak	Weak
Compactness		good	good	smallest
Complexity	As low as poss	Medium	High (4 rods)	Medium
			Crab mode is not the fundamental mode	

Review findings

- No Show Stoppers
- HOM damper design needs to have very high priority
- Validate simulations with cross checking codes
- Complete He vessel engineering design soon
- Schedule is very tight
- Carrying 3 designs is too much, need to prioritize

More from the Review

- Schedule is very tight
- Manufacturing plan from the company is very ambitious and not credible
- Pursue the two LARP designs
  - 4-Rod design on hold
- Encourage the LU team to continue participating in the ongoing effort
- Consider a single cavity design for H and V in the LHC

Next Steps

- BNL/ODU
  - Check RF surfaces
  - Finalize port locations & all related calculations (heat loads, RF)
  - Finalize and document manufacturing tolerances
- FNAL/USLARP
  - Prepare the design file for both cavities including pressure analysis
  - Check and provide feedback on the Eng. Specification with CERN
- CERN
  - Finalize engineering specifications
  - Check design files from FNAL
  - Release 3D models with final interfaces on EDMS
  - One specification drawing/cavity
  - Update functional specification

Integrating contributions from UK colleagues in the ongoing effort

Conclusions

- The CC program made tremendous progress towards its goals
- Very focused on SPS test
  - Big effort at CERN in infrastructure development and engineering support
  - Also AP/Instrumentation/Vacuum/Cryo/Machine Protection…..
- Look forward to the challenges ahead as a team

Thanks very much

From Ofelia Capatina:

"Regardless the outcome of this review, CERN strongly hopes we will continue this fruitful and nice collaboration spirit."

and LARP does too...

Questions?