3-particle quantization condition: an update

Steve Sharpe
University of Washington

Based on work in progress with Max Hansen

Outline

- Overview & motivation
- Background
- Corrections to last year's result
- Sources of corrections
- Future outlook

The fundamental issue

- Lattice QCD can calculate energy levels of multiple-particle systems in a box
- How are these related to scattering amplitudes?

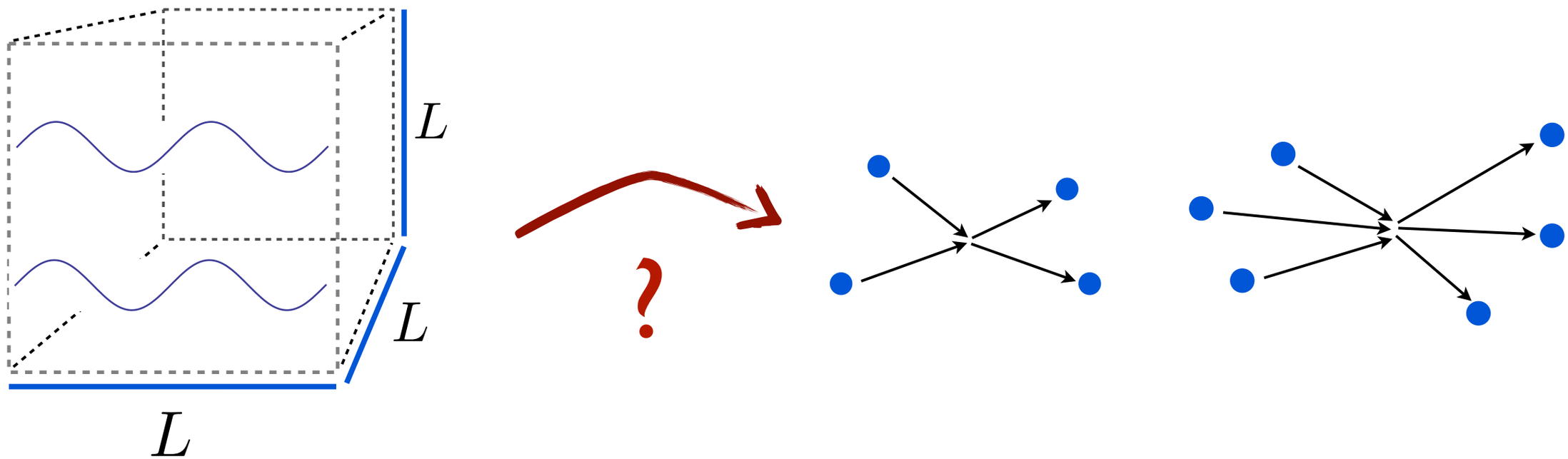

The frontier

- Two-particle quantization condition well understood
- Only partial steps taken for three particles [Polejaeva & Rusetsky, 2012] [Briceño & Davoudi, 2012]

Motivations

- Resonances with 3-particle decays

$$\omega(782) \to \pi\pi\pi \qquad K^* \longrightarrow K\pi\pi \qquad N(1440) \to N\pi\pi$$

- 3-body interactions

$$\pi\pi\pi \longrightarrow \pi\pi\pi \qquad NNN \to NNN$$

- Weak decays to 3 (or more) particles

$$K \to \pi\pi\pi \qquad D \to \pi\pi \qquad D \to K\overline{K}$$

(couple to $\pi\pi\pi\pi$)

Background

2-particle quant. condition

- For given **P**, adjust total energy E until:

$$\det\left(F^{-1} + i\mathcal{M}\right) = 0$$

Form of result given by [Kim, Sachrajda & SRS] ; equivalent to earlier results of [Lüscher; Rummukainen & Gottlieb]

- Entries are infinite dimensional matrices with indices [2-particle CM angular momentum: *l,m*]
- $\mathcal{M}$ is on-shell 2→2 scattering amplitude
- *F* is kinematical, finite-volume factor (related to Lüscher's zeta-function)

$F \equiv$ 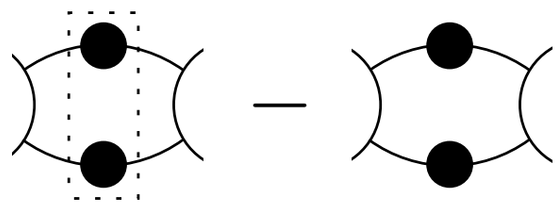

3-particle indices

["spectator" momentum: **k**=2π**n**/L] x
[2-particle CM angular momentum: *l*,*m*]

Total energy-momentum
is (E, **P**)

- For large **k** other two particles are below threshold; must include by analytic continuation

Theory we consider

- Relativistic field theory with single scalar field of mass m
- All vertices with an even number of legs

$\mathbb{Z}_2$ symmetry

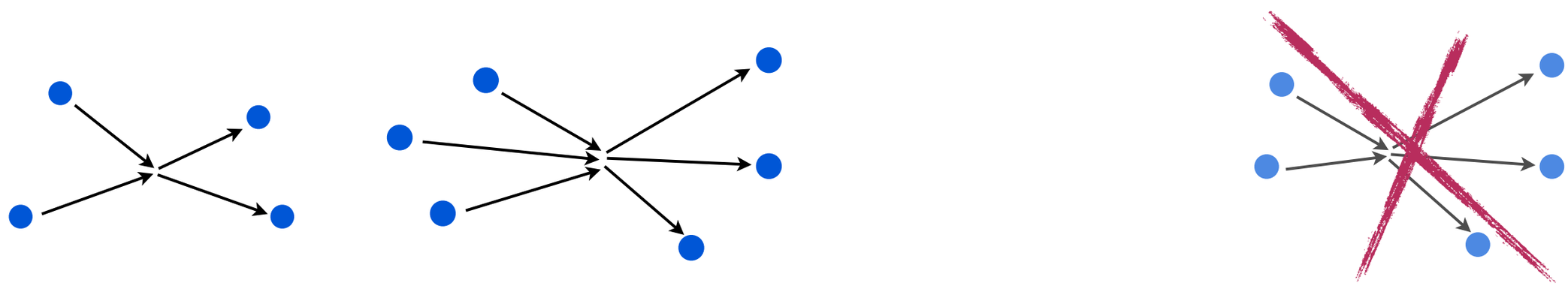

(For pions in QCD this is G-parity)

Last year

3-particle quant. condition

- For given **P**, adjust total energy **E** until:

$$\det[F_{\rm three}^{-1} + i\mathcal{M}_{df,3\to3}] = 0$$

$$F_{\rm three} \equiv \frac{1}{2\omega L^3}\left[(2/3)iF - \frac{1}{[iF]^{-1} - [1 - i\mathcal{M}iG]^{-1}\, i\mathcal{M}}\right]$$

- Entries are infinite dim. matrices with "indices"

["spectator" momentum: **k**=2π**n**/L] x [2-particle CM angular momentum: *l,m*]

- $\mathcal{M}=\mathcal{M}_{2\to2}$ and $\mathcal{M}_{df,3\to3}$ are on-shell amplitudes (analytically continued if below threshold)
- *F* and *G* are kinematical, finite-volume factors

S. Sharpe, "3-particle quantization: part 2" 7/30/13 @ Lattice 2013, Mainz, Germany

Changes since last year

Corrected quant. condition

$$\det[F_{\rm three}^{-1} + i\mathcal{M}_{df,3\to 3}] = 0$$

$$\det[F_3^{-1} + \mathcal{K}_{\rm df,3}] = 0$$

$$F_{\rm three} \equiv \frac{1}{2\omega L^3}\left[(2/3)iF_{i\varepsilon} - \frac{1}{[iF_{i\varepsilon}]^{-1} - [1 - i\mathcal{M}iG]^{-1}\, i\mathcal{M}}\right]$$

$$F_3 = \frac{1}{2\omega L^3}\left[-\frac{2F}{3} + \frac{1}{F^{-1} + (1+\mathcal{K}_2 G)^{-1}\mathcal{K}_2 F}\right]$$

These changes were made in the conference proceedings [arXiv:1311.4848] but the definition of $K_{df,3}$ has since been corrected

Changes

$$\det[F_{\rm three}^{-1} + i\mathcal{M}_{df,3\to 3}] = 0$$

$$\det[F_3^{-1} + \mathcal{K}_{\rm df,3}] = 0$$

Real infinite-volume K-matrix-like quantity with physical divergences subtracted

$$F_{\rm three} \equiv \frac{1}{2\omega L^3}\left[(2/3)iF_{i\varepsilon} - \frac{1}{[iF_{i\varepsilon}]^{-1} - [1 - i\mathcal{M}iG]^{-1}\, i\mathcal{M}}\right]$$

Kinematic factor defined with PV integration (instead of iε prescription) so *real*

2-particle K-matrix *(real, cusp-free)*

$$F_3 = \frac{1}{2\omega L^3}\left[-\frac{2F}{3} + \frac{1}{F^{-1} + (1 - \mathcal{K}_2 G)^{-1}\mathcal{K}_2 F}\right]$$

These changes were made in the conference proceedings [arXiv:1311.4848] but the definition of $K_{df,3}$ has since been corrected

Implications of changes

$$\det[F_3^{-1} + \mathcal{K}_{\mathrm{df},3}] = 0$$

- Finite-volume spectrum still determined by infinite-volume scattering-like amplitudes (up to corrections falling faster than any power of L)
- Previous check of formalism at threshold (**P**=0, E≈3m) by comparison to NR results still goes through since changes to F_3 are minor
- Practical application remains equally challenging: requires truncation and assumptions about amplitudes
- Relation of $\mathcal{K}_{\mathrm{df},3}$ to physical 3-particle scattering amplitude not yet clear

Sources of changes

Cusps

- Our previous analysis dealt with all 1/L effects arising from 3-particle cuts
- Cusps lead to additional 1/L effects (beginning at $1/L^4$) [Polejaeva & Rusetsky]
- These are relevant for three (or more) particles, but not for two
- They occur in 3-particle intermediate states adjacent to 2→2 kernels

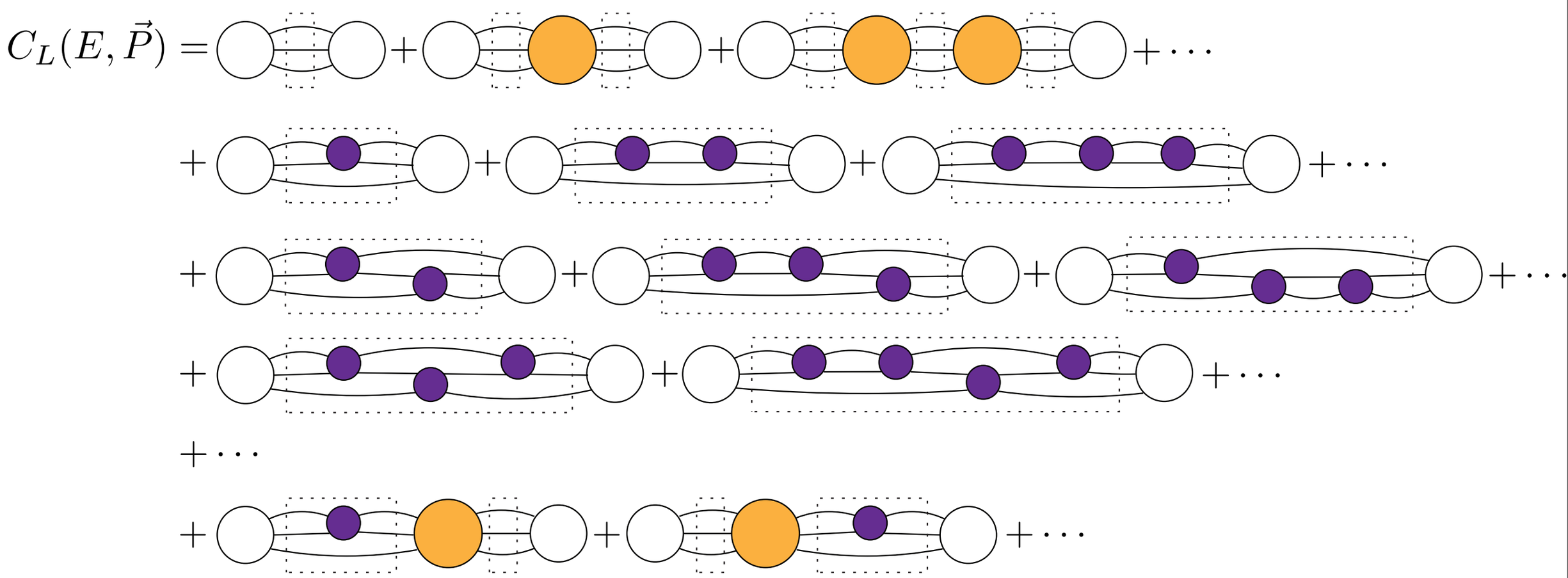

Cusps

- Our previous analysis dealt with all 1/L effects arising from 3-particle cuts
- Cusps lead to additional 1/L effects (beginning at $1/L^4$) [Polejaeva & Rusetsky]
- These are relevant for three (or more) particles, but not for 2
- They occur in 3-particle intermediate states adjacent to 2→2 kernels

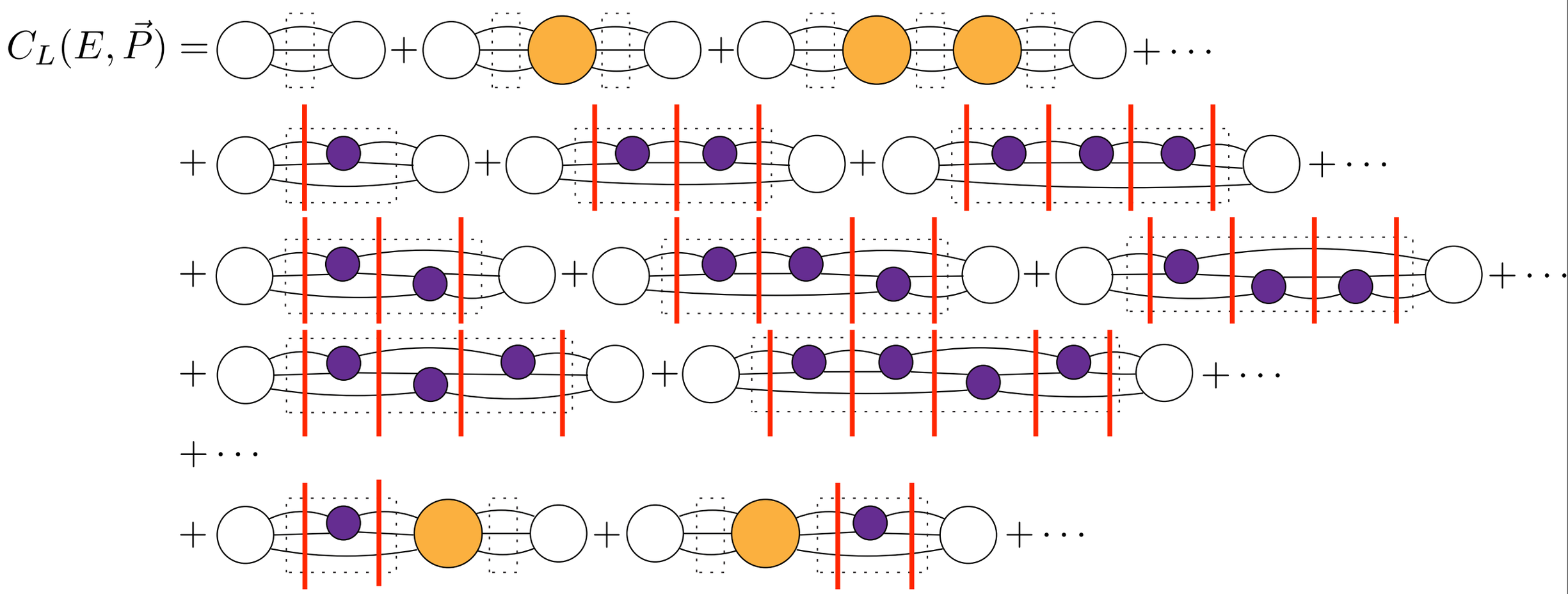

Cusp analysis (1)

- Aim: replace sums with integrals + finite-volume residue
- E.g.

$$(E, \vec{P}) \longrightarrow \quad \frac{1}{L^6} \sum_{\vec{k}} \sum_{\vec{a}}$$

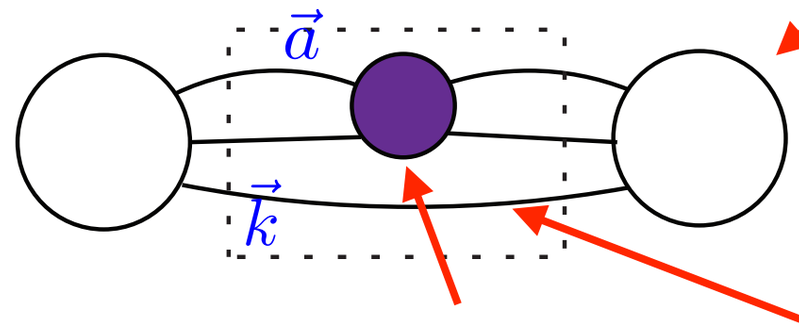

interpolating operator

2PI Bethe-Salpeter kernel

dressed propagators

- Can replace sums with integrals for smooth, non-singular parts of summand
- Singular part of left-hand 3-particle intermediate state

$$\frac{1}{L^6} \sum_{\vec{k}} \sum_{\vec{a}} \frac{A(\vec{k}, \vec{a}) B(\vec{k}, \vec{a})}{E - \omega_k - \omega_a - \omega_{ka}}$$

smooth functions

denominator vanishes on-shell

$\sqrt{\vec{k}^2 + m^2}$

$\sqrt{\vec{a}^2 + m^2}$

$\sqrt{(\vec{P} - \vec{k} - \vec{a})^2 + m^2}$

Cusp analysis (2)

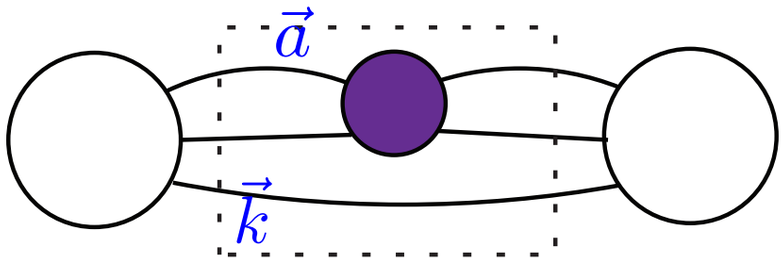

$$\frac{1}{L^6}\sum_{\vec{k}}\sum_{\vec{a}}\frac{A(\vec{k},\vec{a})B(\vec{k},\vec{a})}{E-\omega_k-\omega_a-\omega_{ka}}$$

- Step 1: $\frac{1}{L^3}\sum_{\vec{a}} \longrightarrow \int_{\vec{a}} + \underline{\left(\frac{1}{L^3}\sum_{\vec{a}} - \int_{\vec{a}}\right)}$

Difference gives zeta-function F with A & B projected on shell [Lüscher,...]

- Step 2:

Want to replace sum over **k** with integral
Only possible if integral over **a** gives smooth function
Requires use of <u>Principal Value</u> prescription, analytically continued when values of **k** such that top two particles are below threshold
(iε prescription and standard PV lead to cusps)

Leave **k** summed
since F has multiple singularities

Cusp analysis (3)

- Simple example: $\int_{\vec{a}} \frac{A(\vec{k},\vec{a})B(\vec{k},\vec{a})}{E-\omega_k-\omega_a-\omega_{ka}} \longrightarrow f(c) = \int_0^\infty dx \frac{\sqrt{x}e^{-(x-c)}}{c-x}$

$x \sim (a^*)^2$

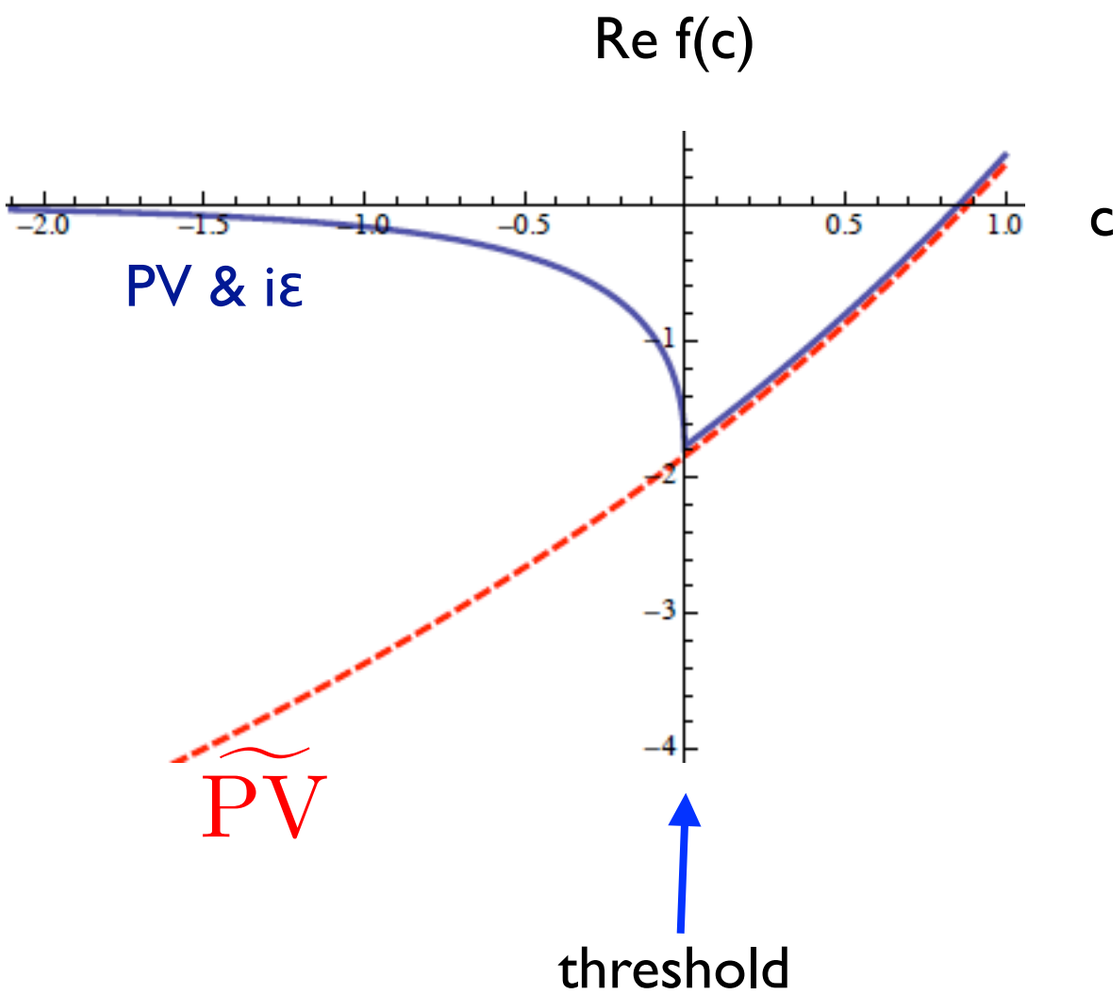

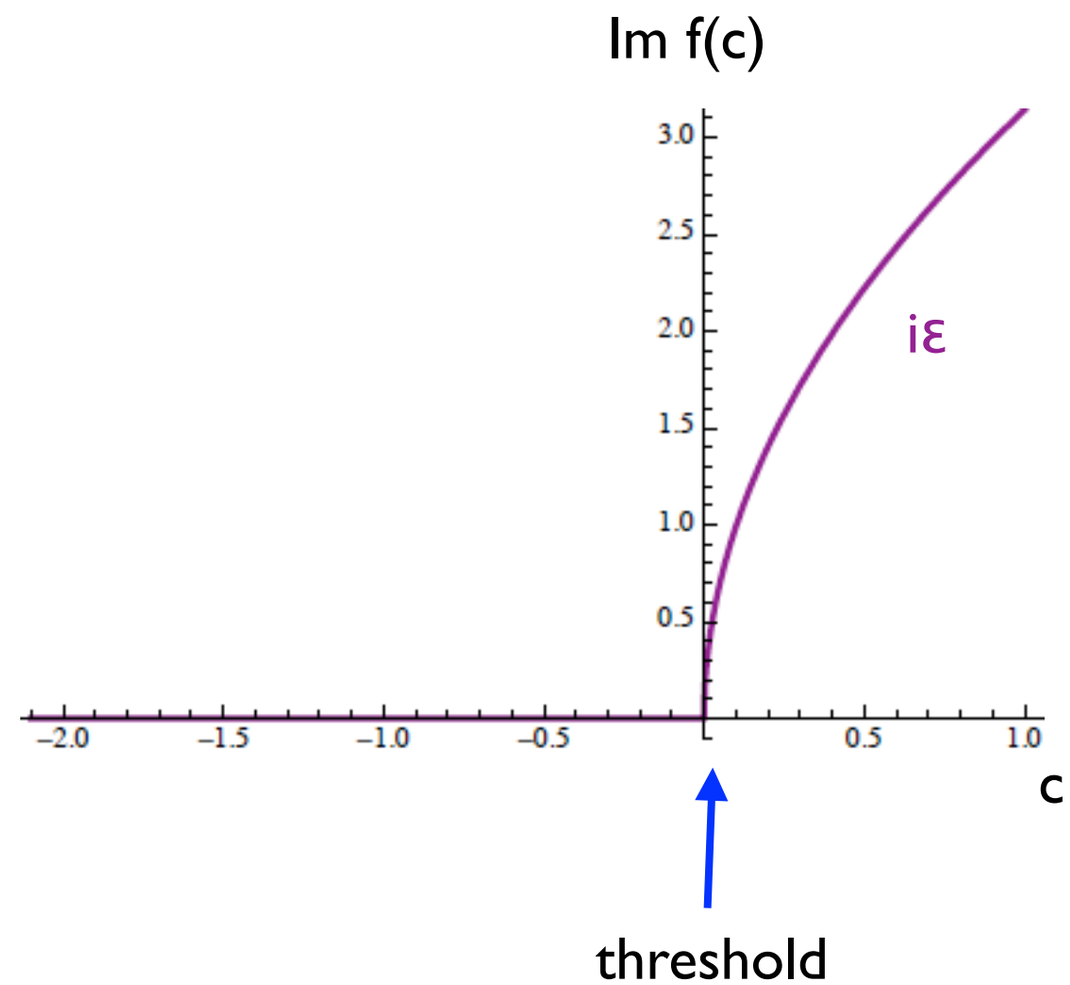

Cusp analysis (4)

- Using $\widetilde{\mathrm{PV}}$ prescription leads to $\mathcal{K}_2$ with standard analytic continuation below threshold

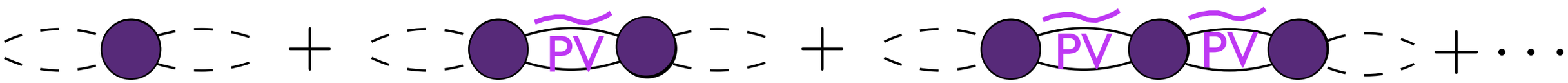

$$\mathcal{K}_2^\ell = \frac{16\pi E^*}{a^* \cot \delta_\ell(a^*)}$$

- This prescription is that used previously when studying finite-volume effects on bound-state energies using two-particle quantization condition
- If instead use PV prescription, then $a^* \cot \delta$ has a cusp at threshold

Symmetry breaking

- Using $\widetilde{\mathrm{PV}}$ prescription breaks particle interchange symmetry
  - Top two particles treated differently from spectator
  - Leads to very complicated definition for $\mathcal{K}_{\mathrm{df},3}$, e.g.

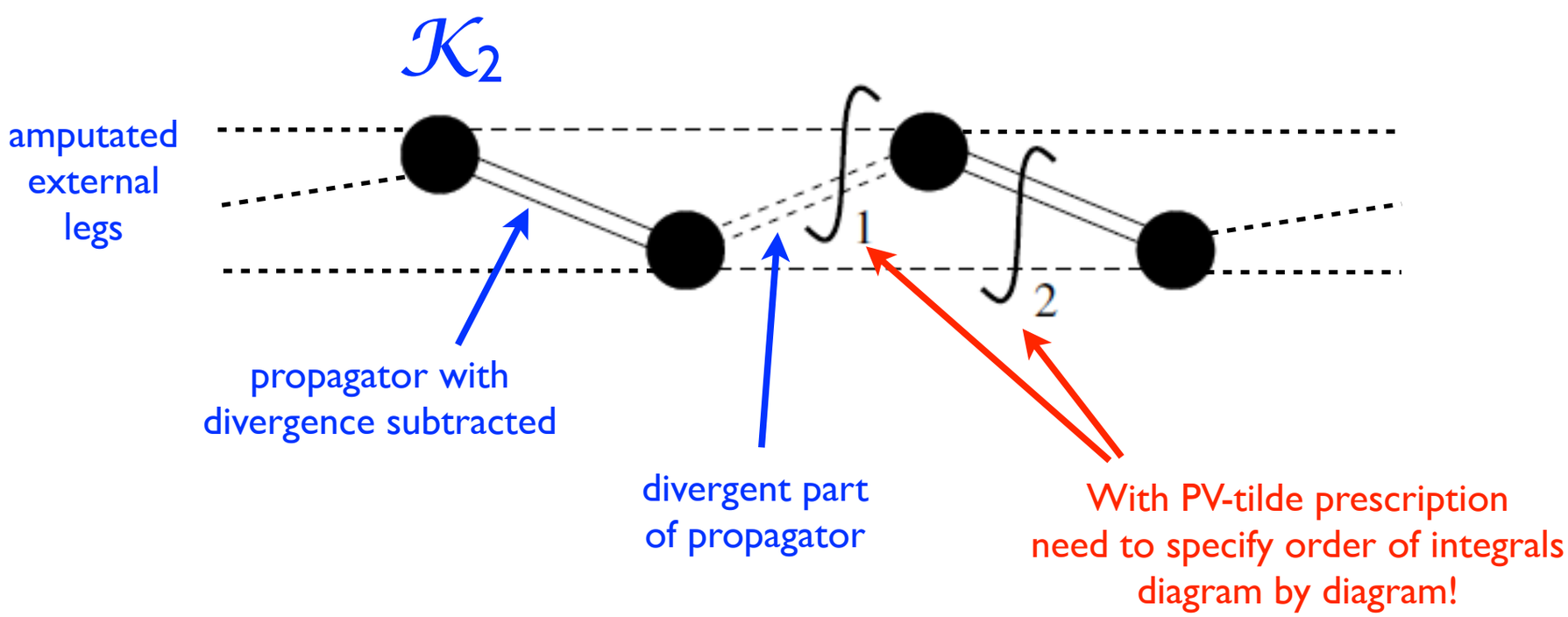

- Relation between $\mathcal{K}_2$ and $\mathcal{M}_2$ simple, but that between $\mathcal{K}_{\mathrm{df},3}$ and $\mathcal{M}_3$, $\mathcal{M}_2$ not yet known

Outlook & Plans

$$\det[F_3^{-1} + \mathcal{K}_{\mathrm{df},3}] = 0$$

- Write-up of corrected analysis nearly complete
- Relation of $\mathcal{K}_{\mathrm{df},3}$ to physical amplitudes under study (partial results so far)
- Numerical examples using simple models are underway
- We also plan to compare in more detail with [Polejaeva & Rusetsky], [Briceño & Davoudi] & [HAL QCD]

Outlook & Plans

- Write-up of corrected analysis nearly complete
- Relation of $\mathcal{K}_{\mathrm{df},3}$ to physical amplitudes under study (partial results so far)
- Numerical examples using simple models are underway
- We also plan to compare in more detail with [Polejaeva & Rusetsky], [Briceno & Davoudi] & [HAL QCD]

Outlook & Plans

- Write-up of corrected analysis nearly complete
- Relation of $\mathcal{K}_{\mathrm{df},3}$ to physical amplitudes under study (partial results so far)
- Numerical examples using simple models are underway
- We also plan to compare in more detail with [Polejaeva & Rusetsky], [Briceno & Davoudi] & [HAL QCD]

Thank you!
Any questions?

Backup Slides

Threshold expansion

- Given complexity of derivation & new features of result, it is clearly important to check it to the extent possible
- Can do so for **P**=0 and near threshold: $E=3m+\Delta E$, with $\Delta E \sim 1/L^3+\ldots$
- In other words, study energy shift of three particles (almost) at rest
- Dominant effects (L^{-3}, L^{-4}, L^{-5}) involve 2-particle interactions, but 3-particle interaction enters at L^{-6}
- For large L, particles are non-relativistic ($\Delta E \ll m$) and can use NREFT methods
- This has been done previously by [Beane, Detmold & Savage, 0707.1670] and [Tan, 0709.2530]

Our threshold expansion

$$E = 3m + \frac{12\pi a}{mL^3}\left[1 - \left(\frac{a}{\pi L}\right)\mathcal{I} + \left(\frac{a}{\pi L}\right)^2[\mathcal{I}^2 + \mathcal{J}] + \left(\frac{a}{\pi L}\right)^3[-\mathcal{I}^3 + \mathcal{I}\mathcal{J} + 15\mathcal{K} - 16\mathcal{Q} - 8\mathcal{R}]\right]$$

$$+ \frac{72a^3\pi^2 r}{mL^6} + \frac{36a^2\pi^2}{m^3L^6} + \frac{\tilde{a}_6}{L^6} + \mathcal{O}(1/L^7)$$

agrees with [Beane et al.] and [Tan] modulo definitions of $\mathcal{Q}$ & $\mathcal{R}$

$$\mathcal{Q} \equiv -2048L^3m^3\pi^6 \sum_{\vec{k}\neq 0, \vec{p}\neq 0} G_{0,k}G_{k,p}G_{p,0}$$

$$= \underbrace{\sum_{\vec{n}_k\neq 0, \vec{n}_p\neq 0} \frac{1}{\vec{n}_k^2\vec{n}_p^2\left[\vec{n}_k^2 + \vec{n}_p^2 + (\vec{n}_k + \vec{n}_p)^2\right]}}_{\hat{\mathcal{Q}} \text{ of [Beane et al.]}} + \mathcal{O}(1/L)$$

UV convergent!

Log divergent after NR expansion, so requires regulation as in [Beane et al.]

Similar situation for $\mathcal{R}$

Our threshold expansion

$$E = 3m + \frac{12\pi a}{mL^3}\left[1 - \left(\frac{a}{\pi L}\right)\mathcal{I} + \left(\frac{a}{\pi L}\right)^2[\mathcal{I}^2 + \mathcal{J}] + \left(\frac{a}{\pi L}\right)^3[-\mathcal{I}^3 + \mathcal{I}\mathcal{J} + 15\mathcal{K} - 16\mathcal{Q} - 8\mathcal{R}]\right]$$

$$+ \frac{72a^3\pi^2 r}{mL^6} + \frac{36a^2\pi^2}{m^3L^6} + \frac{\tilde{a}_6}{L^6} + \mathcal{O}(1/L^7)$$

[Beane et al] have 24, [Tan] has 36,
we have 72

[Beane et al.] and [Tan] do
not have this term

$$\tilde{a}_6 = -\frac{\mathcal{K}_{df,3\to3,\Lambda,00}(E = 3m, \vec{P} = 0)}{48m^3}$$

Physical, finite quantity, with no μ dependence
Directly related to scattering amplitudes
In [Beane et al.] this term is

$$\frac{1}{L^6}\eta_3(\mu)$$

Interpretation of "differences"

$$+\frac{64\pi a^4}{ML^6}(3\sqrt{3}-4\pi)\log(\mu L)+\frac{24\pi^2 a^3}{ML^6}r+\frac{1}{L^6}\eta_3(\mu)$$

[Beane et al.]

vs.

$$+\frac{72a^3\pi^2 r}{mL^6}+\frac{36a^2\pi^2}{m^3L^6}+\frac{\tilde{a}_6}{L^6}$$

[Hansen & SRS]

- We do not know *a priori* the relation between $\mathcal{K}_{df,3\to3}$ and η_3
- We can view this comparison as providing the relation between $\mathcal{K}_{df,3\to3}$ and η_3 if we equate the two expressions
- As far as we can see, there is nothing forbidding this relation to include the finite a^2 and $a^3 r$ terms
  - Indeed, a similar finite difference is required to match [Beane et al.] with [Tan]
- It would clearly be good to check this purported relation in another context