Multi-channel 1 to 2 matrix elements in finite volume

lattice 14

Tuesday, 24th June, 2014

arXiv:1406.5965
Raúl Briceño, Máx Hansen
& André Walker-Loud

The College of William & Mary

Jefferson Lab

Motivation

- Many interesting quantities to compute with LQCD which involve multiple hadrons in initial/final state

$K \to \pi\pi$

$B \to K^*\ell^+\ell^- \to K\pi\ell^+\ell^-$

$pp \to de^+\nu_e$

$\gamma\pi \to \pi\pi$

$\gamma N \to \Delta \to N\pi$

$\ldots$

SM/BSM

"calibrate the sun"

chiral dynamics

Motivation

- Unlike the single hadron ground state spectrum or matrix elements, NO simple relation between finite-volume (FV) matrix-elements and infinite-volume (∞V) transition amplitudes

- We were motivated to determine a "master formula" with as few approximations as possible: in this work - focus on transition form-factors between (pseudo)-scalar states

Motivation

$$\left|\langle E_{\Lambda_f,n_f}\mathbf{P}_f; L|\tilde{\mathcal{J}}^{[J,P,|\lambda|]}_{\Lambda\mu}(0,\mathbf{P}_f-\mathbf{P}_i)|E_{\Lambda_i,0}\mathbf{P}_i; L\rangle\right| = \frac{1}{\sqrt{2E_{\Lambda_i,0}}}\sqrt{\left[\mathcal{A}^\dagger_{\Lambda_f,n_f;\Lambda\mu}\ \mathcal{R}_{\Lambda_f,n_f}\ \mathcal{A}_{\Lambda_f,n_f;\Lambda\mu}\right]}$$

$$\langle a, P_f, Jm_J;\infty|\tilde{\mathcal{J}}^{[J,P,|\lambda|]}_{\Lambda\mu}(0,\mathbf{Q};\infty)|P_i;\infty\rangle = \left[\mathcal{A}_{\Lambda\mu;Jm_J}\right]_a\ (2\pi)^3\ \delta^3(\mathbf{P}_f-\mathbf{P}_i-\mathbf{Q})$$

master formula: finite-volume matrix element of a current that

- can inject arbitrary four-momentum and angular momentum
- includes all inelastic coupled channels, “a”
- incorporates partial-wave mixing (from box and/or physics)

$\mathcal{A}$ column vector in angular-momentum/channel space

Λ_f denotes the projection onto the finite volume irrep. Λ row μ

$\mathcal{R}_{\Lambda_f,n_f}$ matrix: related to the residues of FV two-particle propagators of state n_f

1 AND 2 HADRON CORRELATORS

$$C^{(1)}(x_0 - y_0, \mathbf{k}) \equiv \langle 0|\varphi(x_0, \mathbf{k})\varphi^\dagger(y_0, -\mathbf{k})|0\rangle$$

$$= e^{-E_k^{(1)}(x_0-y_0)}|\langle 0|\varphi(0,\mathbf{k})|E^{(1)}\mathbf{k}; L\rangle|^2 + \mathcal{O}\left(L^3 \frac{e^{-E_{3,th}^{(1)}(x_0-y_0)}}{E_{3,th}^{(1)}}\right),$$

=

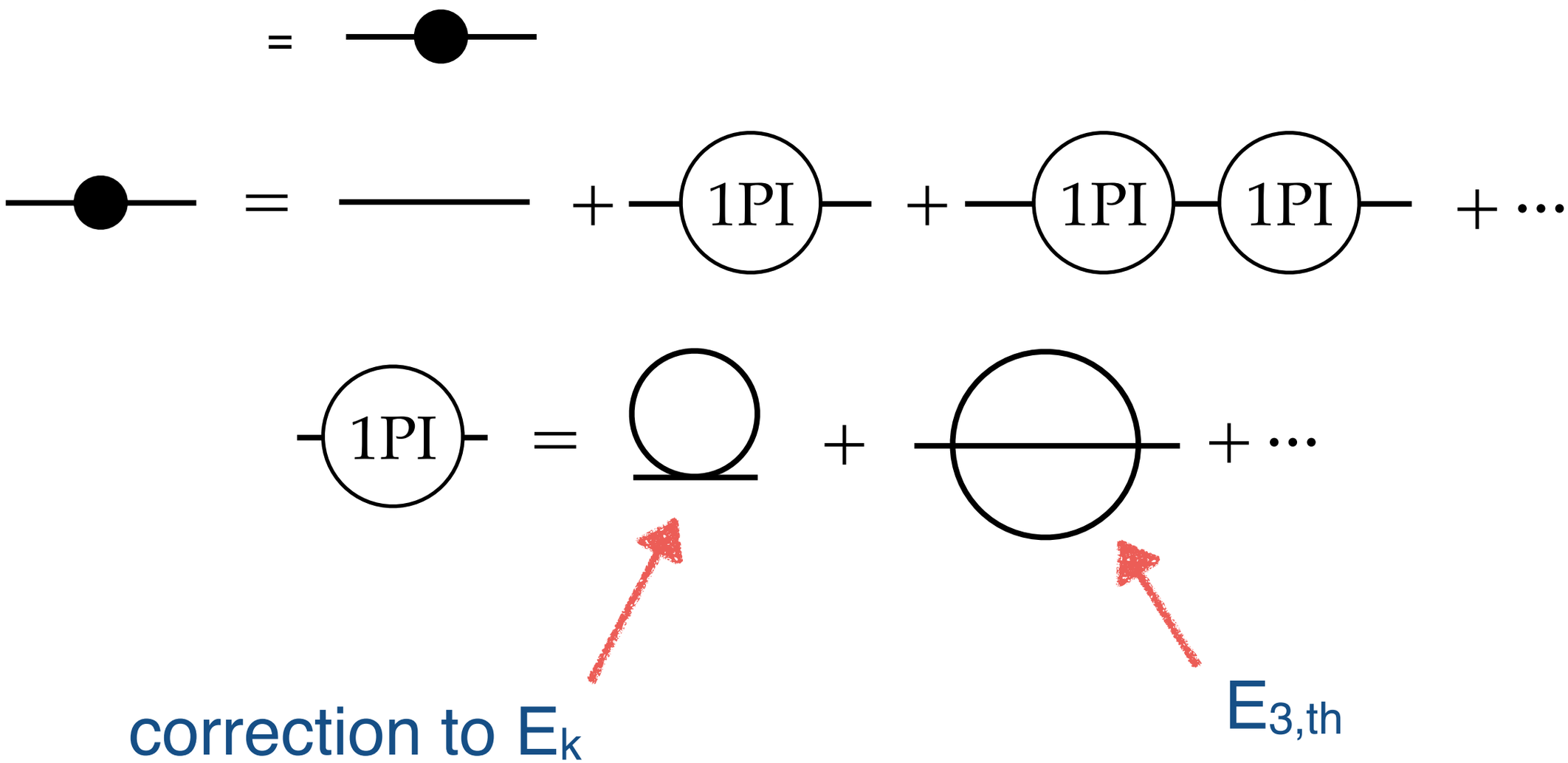

1 AND 2 HADRON CORRELATORS

$$C^{(2)}_{\Lambda\mu}(x_0 - y_0, \mathbf{P}) = \langle 0|\mathcal{O}_{\Lambda\mu}(x_0, \mathbf{P})\mathcal{O}^{\dagger}_{\Lambda\mu}(y_0, -\mathbf{P})|0\rangle$$

$$\mathcal{O}_{\Lambda\mu}(x_0, \mathbf{P}, |\mathbf{P}-\mathbf{k}|, |\mathbf{k}|) = \sum_{R\in \mathrm{LG}(\mathbf{P})} \mathcal{C}(\mathbf{P}\Lambda\mu; R\mathbf{k}; R(\mathbf{P}-\mathbf{k}))\varphi(x_0, R\mathbf{k})\tilde{\varphi}(x_0, R(\mathbf{P}-\mathbf{k}))$$

R element of $\mathrm{LG}(\mathbf{P})$, little group of rotations leaving $\mathbf{P}$ invariant

$$\mathcal{C}(\mathbf{P}\Lambda\mu; R\mathbf{k}; R(\mathbf{P}-\mathbf{k})) \equiv \left\langle \Lambda(\mathbf{P}), \mu \middle| \Lambda_1(\{\mathbf{P}-\mathbf{k}\}_{\mathbf{P}}), R(\mathbf{P}-\mathbf{k}); \Lambda_2(\{\mathbf{k}\}_{\mathbf{P}}), R\mathbf{k}\right\rangle$$

projection onto Λ

eg $$\mathcal{O}_{\mathbb{A}_1^+}(x_0, \mathbf{0}) = \frac{\sigma}{\sqrt{6}} \sum_{\hat{i}=\{\hat{x},\hat{y},\hat{z}\}} \left[\varphi(x_0, q_{(1)}\hat{\mathbf{i}})\tilde{\varphi}(x_0, -q_{(1)}\hat{\mathbf{i}}) + \varphi(x_0, -q_{(1)}\hat{\mathbf{i}})\tilde{\varphi}(x_0, q_{(1)}\hat{\mathbf{i}})\right]$$

$$q_{(1)} = \frac{2\pi}{L}$$

$$\mathcal{O}_{\mathbb{A}_1}(x_0, q_{(1)}\hat{\mathbf{z}}) = \frac{1}{2} \sum_{\hat{i}=\{\hat{x},\hat{y}\}} \left[\varphi(x_0, q_{(1)}\hat{\mathbf{i}})\tilde{\varphi}(x_0, -q_{(1)}(\hat{\mathbf{z}}-\hat{\mathbf{i}})) + \varphi(x_0, -q_{(1)}\hat{\mathbf{i}})\tilde{\varphi}(x_0, q_{(1)}(\hat{\mathbf{z}}+\hat{\mathbf{i}}))\right]$$

1 AND 2 HADRONS

$$C^{(2)}_{\Lambda\mu}(x_0 - y_0, \mathbf{P}) = \langle 0|\mathcal{O}_{\Lambda\mu}(x_0, \mathbf{P})\mathcal{O}^{\dagger}_{\Lambda\mu}(y_0, -\mathbf{P})|0\rangle$$

Kim, Sachrajda and Sharpe
Nucl.Phys. B727 (2005)

$$\int \frac{dP_0}{2\pi}\frac{dk_0}{2\pi} e^{iP_0(x_0-y_0)} \left\{ \right.$$

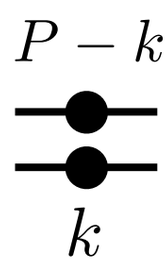

$$\left. + \cdots \right\}$$

The integration over k_0 puts one hadron on-shell:

The integration over P_0 can not be performed until non-perturbatively summing over all diagrams

1 AND 2 HADRONS

$$C^{(2)}_{\Lambda\mu}(x_0 - y_0, \mathbf{P}) = \langle 0|\mathcal{O}_{\Lambda\mu}(x_0, \mathbf{P})\mathcal{O}^{\dagger}_{\Lambda\mu}(y_0, -\mathbf{P})|0\rangle$$

Kim, Sachrajda and Sharpe
Nucl.Phys. B727 (2005)

$$E_{free} = \omega_{\vec{k}} + \omega_{\vec{P}-\vec{k}}$$

$$\int \frac{dP_0}{2\pi} e^{iP_0(x_0-y_0)}$$

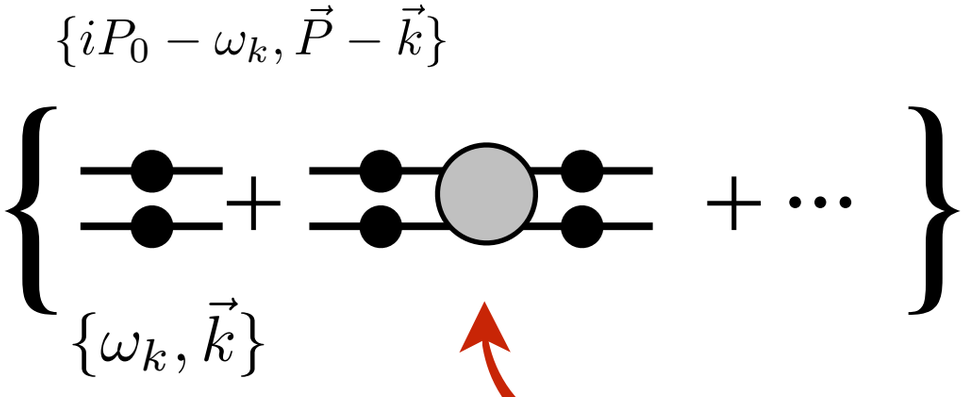

Bethe-Salpeter Kernel:
explicit dependence upon
off-shell scattering

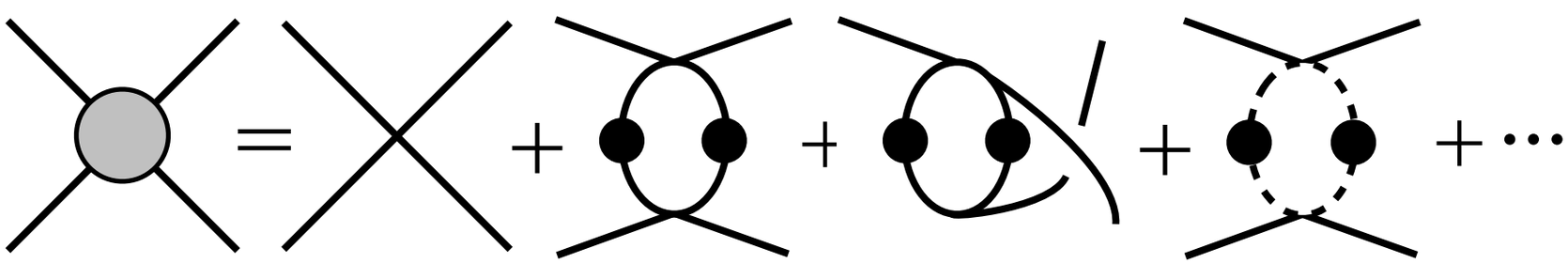

Related to the K-matrix
Real part of inverse
scattering amplitude

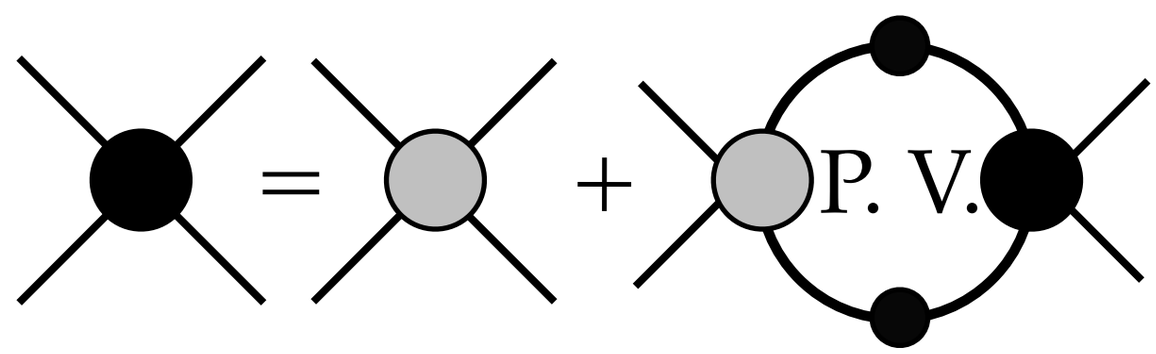

1 AND 2 HADRONS

Kim, Sachrajda and Sharpe
Nucl.Phys. B727 (2005)

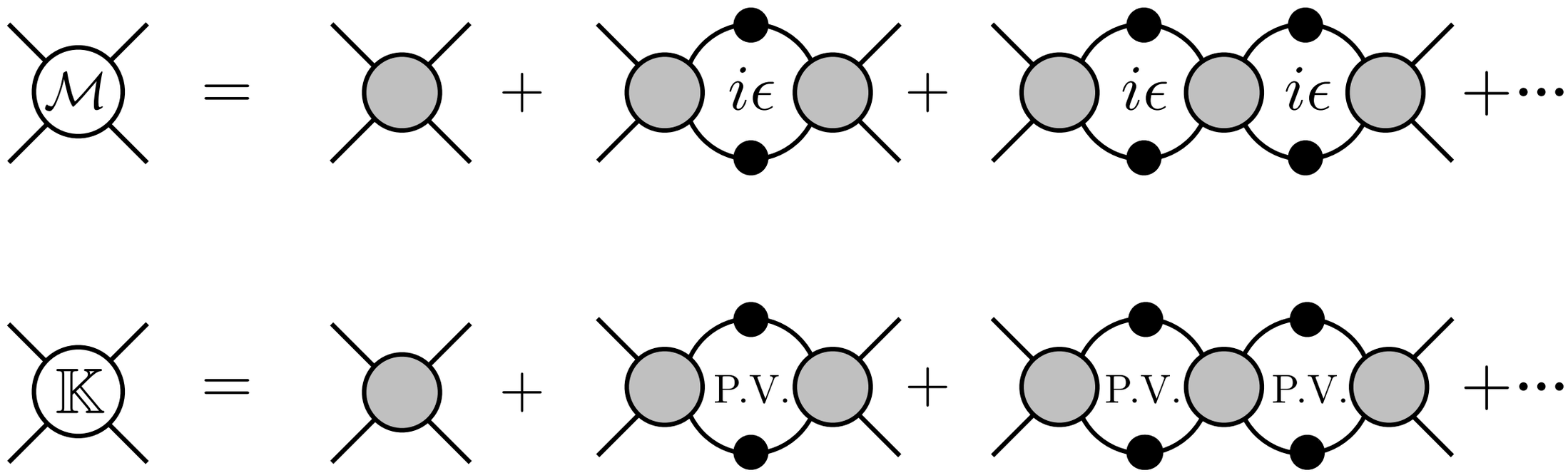

K-matrix

differs from infinite volume K-matrix only by terms exponentially suppressed by $m_\pi L$

1 AND 2 HADRONS

$$C^{(2)}_{\Lambda\mu}(x_0 - y_0, \mathbf{P}) = \langle 0|\mathcal{O}_{\Lambda\mu}(x_0, \mathbf{P})\mathcal{O}^{\dagger}_{\Lambda\mu}(y_0, -\mathbf{P})|0\rangle$$

Kim, Sachrajda and Sharpe
Nucl.Phys. B727 (2005)

$$\int \frac{dP_0}{2\pi} e^{iP_0(x_0-y_0)} \Big\{$$

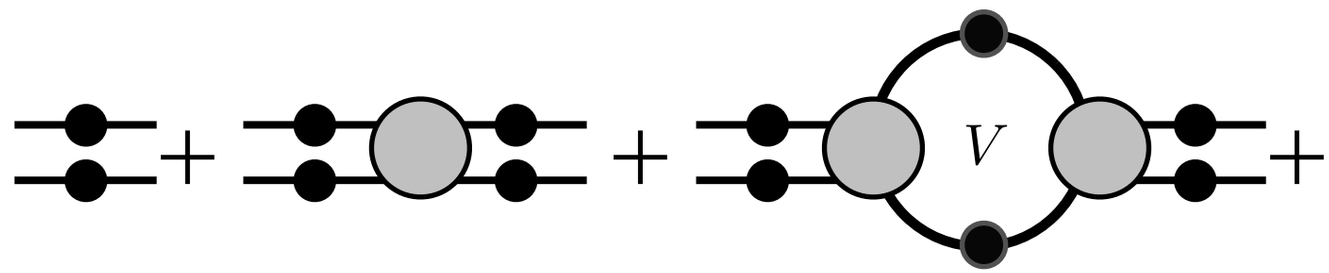

$$\Big\}$$

Intermediate state can go *on-shell* and feel the boundary of the box

→ power-law volume dependence (Lüscher)

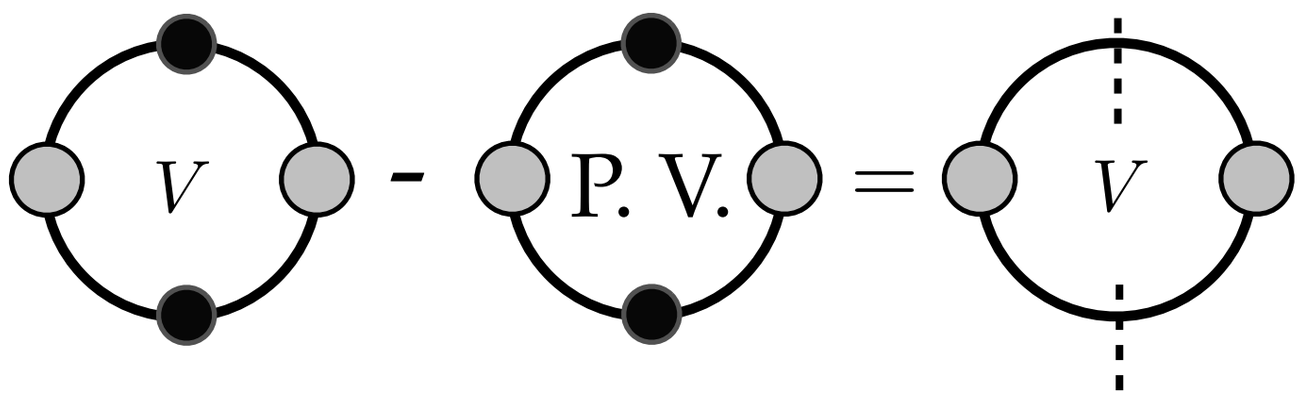

1 AND 2 HADRONS

$$C^{(2)}_{\Lambda\mu}(x_0 - y_0, \mathbf{P}) = \langle 0|\mathcal{O}_{\Lambda\mu}(x_0, \mathbf{P})\mathcal{O}^{\dagger}_{\Lambda\mu}(y_0, -\mathbf{P})|0\rangle$$

Kim, Sachrajda and Sharpe
Nucl.Phys. B727 (2005)

$$\int \frac{dP_0}{2\pi} e^{iP_0(x_0-y_0)} \Big\{$$

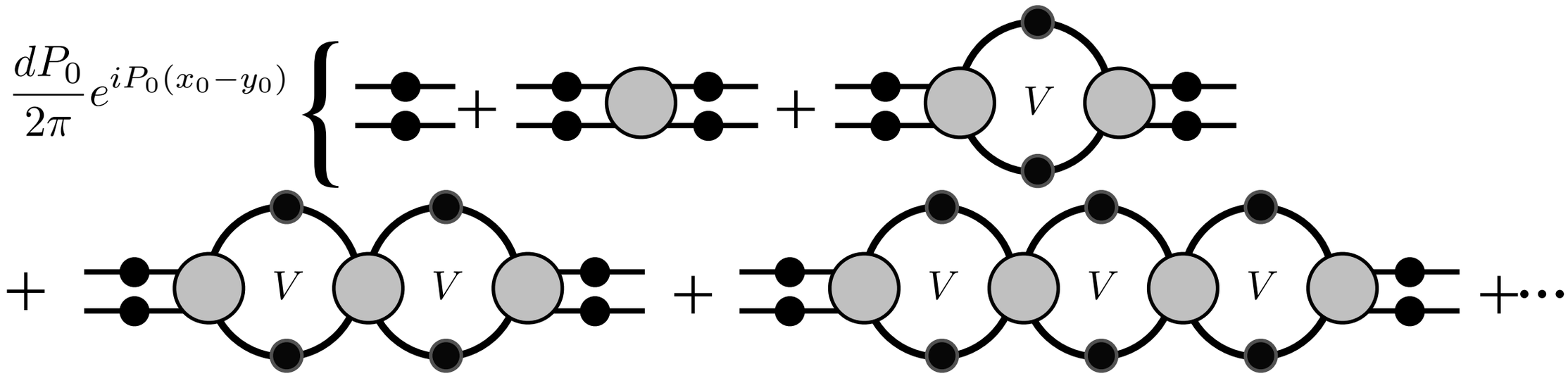

$$\Big\}$$

Poles of this infinite series lead to quantization condition that determines spectrum of interacting system

Hansen and Sharpe PRD 86 (2012)
Briceño and Davoudi PRD 88 (2013)

$$\det[\mathbb{M}(E_n)] = \det\left[\mathbb{K}(E_n) + \left(\mathbb{F}^V(E_n)\right)^{-1}\right] = 0$$

If we only cared about the spectrum and scattering - we would be done - this is a generalization of the Lüscher formula relating finite-volume energy levels to infinite volume scattering phase shifts

1 AND 2 HADRONS

$$C^{(2)}_{\Lambda\mu}(x_0 - y_0, \mathbf{P}) = \langle 0|\mathcal{O}_{\Lambda\mu}(x_0, \mathbf{P})\mathcal{O}^{\dagger}_{\Lambda\mu}(y_0, -\mathbf{P})|0\rangle$$

Kim, Sachrajda and Sharpe
Nucl.Phys. B727 (2005)

$$\int \frac{dP_0}{2\pi} e^{iP_0(x_0-y_0)} \Big\{$$

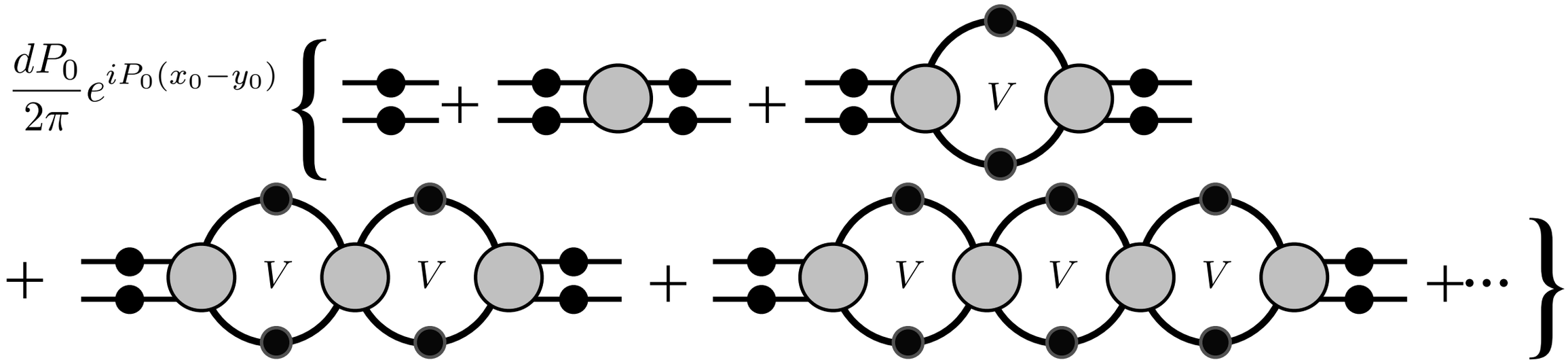

$$\Big\}$$

For our work - we also need to know the residues of the poles

$$R_{\Lambda,n} = \mathrm{adj}[\mathbb{M}(P_{0,M})]\ \mathrm{tr}\left[\mathrm{adj}[\mathbb{M}(P_{0,M})]\frac{\partial \mathbb{M}(P_{0,M})}{\partial P_{0,M}}\right]^{-1}\Bigg|_{P_{0,M}=E_{\Lambda,n}}$$

adjugate of a matrix: $\dfrac{1}{\mathbb{M}(P_{0,M})} \equiv \dfrac{1}{\det[\mathbb{M}(P_{0,M})]}\mathrm{adj}[\mathbb{M}(P_{0,M})]$

diverges at eigen-energies

finite at eigen-energies

1 AND 2 HADRONS

$$C^{(2)}_{\Lambda\mu}(x_0 - y_0, \mathbf{P}) = \langle 0|\mathcal{O}_{\Lambda\mu}(x_0, \mathbf{P})\mathcal{O}^{\dagger}_{\Lambda\mu}(y_0, -\mathbf{P})|0\rangle$$

Kim, Sachrajda and Sharpe
Nucl.Phys. B727 (2005)

$$\int \frac{dP_0}{2\pi} e^{iP_0(x_0-y_0)} \Big\{$$

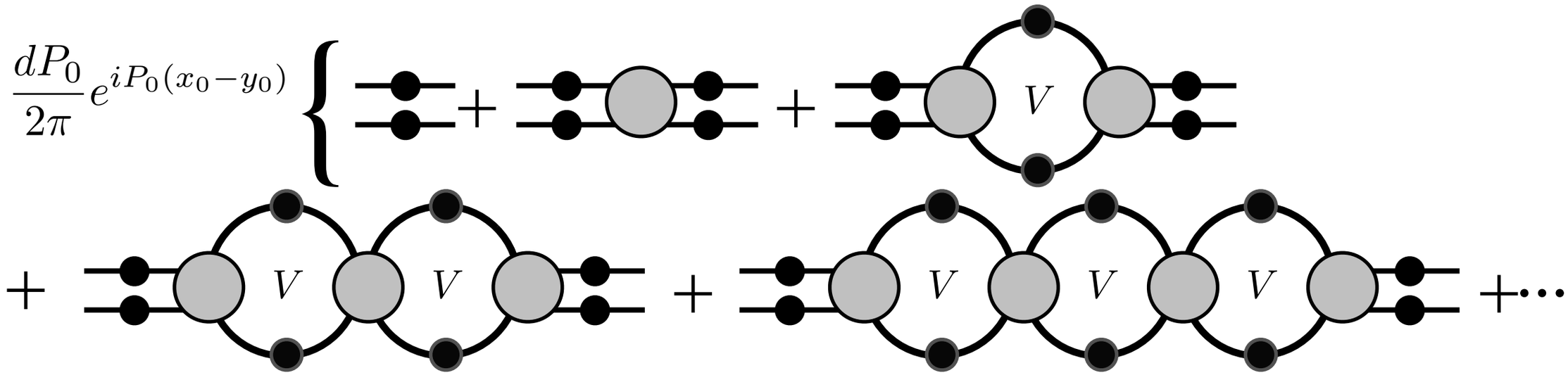

$$\Big\}$$

$$= L^3 \sum_n e^{-E_{\Lambda,n}(x_0-y_0)}\ V^{\dagger}_{\mathcal{O},\Lambda,n}\ R_{\Lambda,n}\ V_{\mathcal{O},\Lambda,n}$$

A vector in angular momentum and open channels; encodes off-shell artifacts

Residue of two-particle propagator

sum over "n" runs over all energies below the N>2 inelastic threshold

1 AND 2 HADRONS

$$C^{(2)}_{\Lambda\mu}(x_0 - y_0, \mathbf{P}) = \langle 0|\mathcal{O}_{\Lambda\mu}(x_0, \mathbf{P})\mathcal{O}^{\dagger}_{\Lambda\mu}(y_0, -\mathbf{P})|0\rangle$$

Kim, Sachrajda and Sharpe
Nucl.Phys. B727 (2005)

$$\int \frac{dP_0}{2\pi} e^{iP_0(x_0-y_0)} \Big\{$$

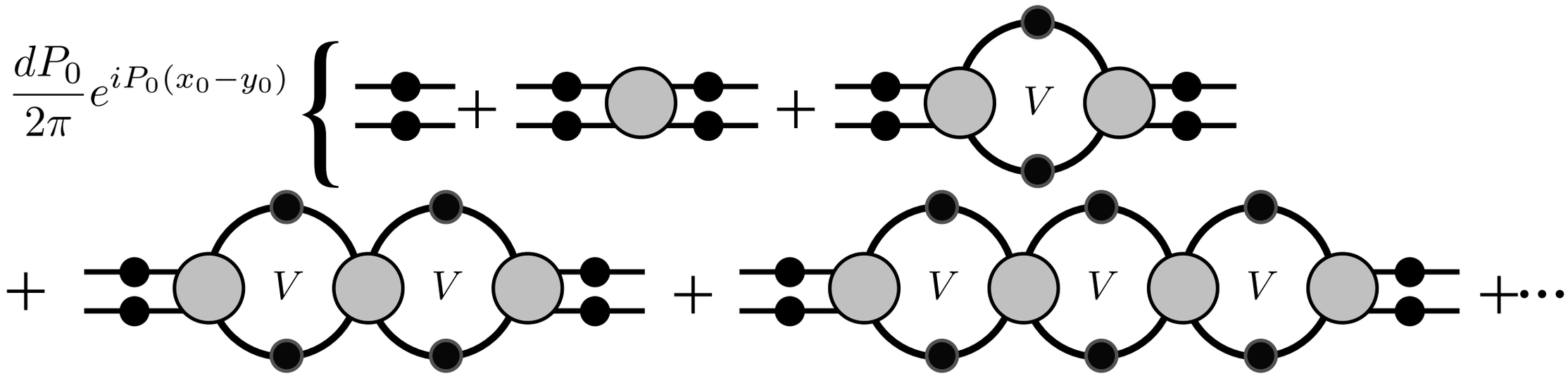

$$\Big\}$$

generalize to coupled channels

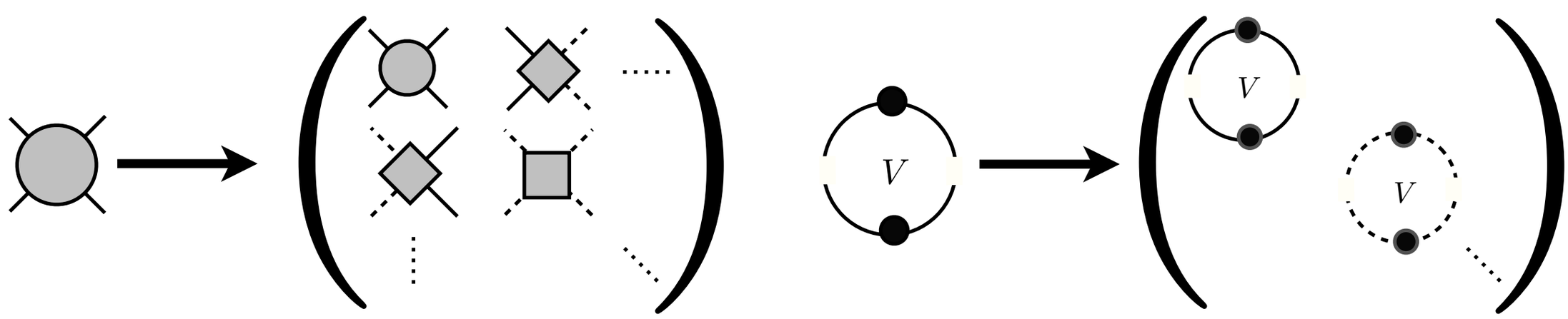

1 AND 2 HADRONS

for very nice example with coupled channels,

see talk by David Wilson

Monday: 15:35 *Resonances in π-K scattering*

see also Dudek, Edwards, Thomas and Wilson

arXiv:1406.4158

3 POINT CORRELATION FUNCTION

The construction of the finite-volume matrix element follows very closely the construction of the two-hadron correlation function

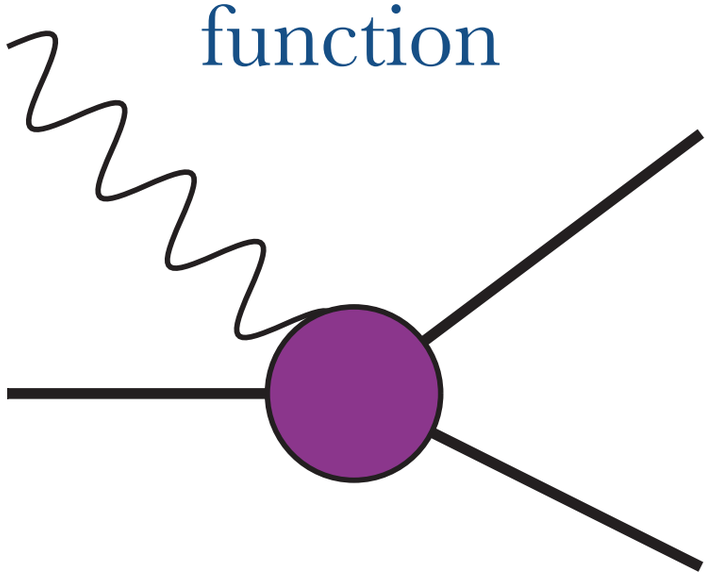

$$C^{(1\to 2)}_{\Lambda_f \mu_f;\Lambda\mu}(x_{f,0}-y_0;y_0-x_{i,0}) = \langle 0|\mathcal{O}_{\Lambda_f\mu_f}(x_{f,0},\mathbf{P}_f)\ \tilde{\mathcal{J}}^{[J,P,|\lambda|]}_{\Lambda\mu}(y_0,\mathbf{Q})\ \varphi^\dagger(x_{i,0},-\mathbf{P}_i)|0\rangle$$

Interpolating field optimized for two-hadron state in definite irrep.

Interpolating field optimized for one-hadron state

Current subduced onto the Λ irrep. of O_h

see Thomas, Edwards and Dudek Phys.Rev. D85 (2012)

3 POINT CORRELATION FUNCTION

$$C^{(1\to 2)}_{\Lambda_f\mu_f;\Lambda\mu}(x_{f,0}-y_0;y_0-x_{i,0}) = \langle 0|\mathcal{O}_{\Lambda_f\mu_f}(x_{f,0},\mathbf{P}_f)\ \tilde{\mathcal{J}}^{[J,P,|\lambda|]}_{\Lambda\mu}(y_0,\mathbf{Q})\ \varphi^\dagger(x_{i,0},-\mathbf{P}_i)|0\rangle$$

$$\int \frac{dP_{f,0}}{2\pi}\frac{dP_{f,0}}{2\pi} e^{iP_{i,0}(x_{f,0}-y_0)} e^{iP_{f,0}(y_0-x_{i,0})}$$

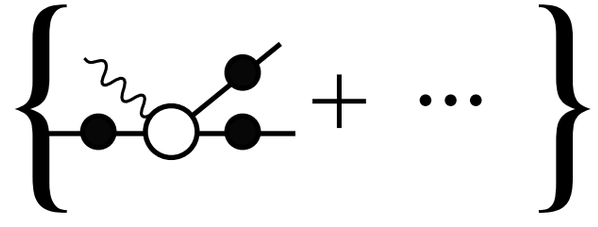

LO transition amplitude:

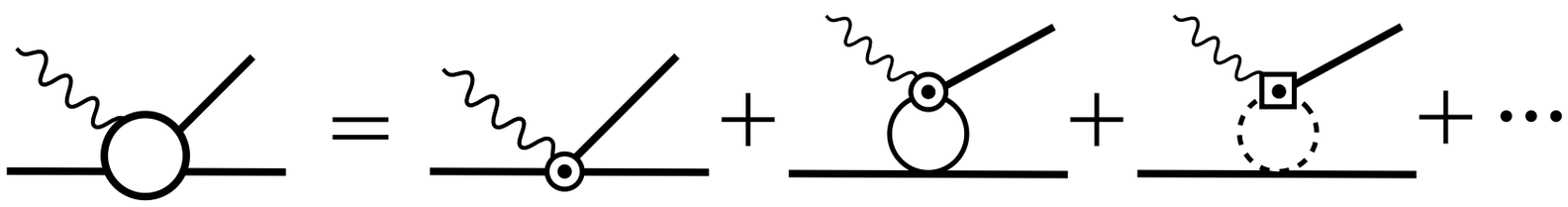

Full transition amplitude: Similar to K-matrix

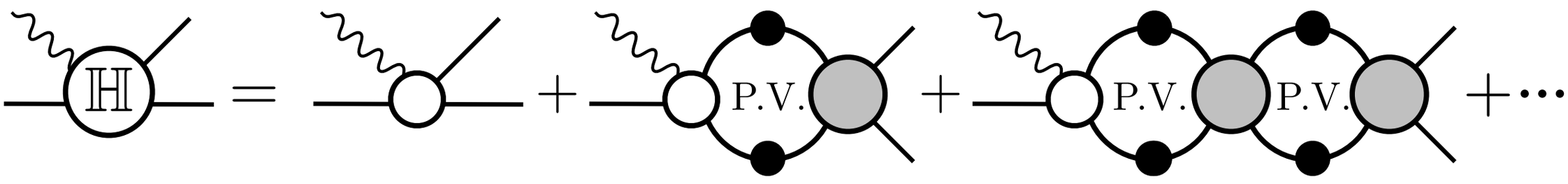

3 POINT CORRELATION FUNCTION

$$C^{(1\to 2)}_{\Lambda_f\mu_f;\Lambda\mu}(x_{f,0}-y_0;y_0-x_{i,0}) = \langle 0|\mathcal{O}_{\Lambda_f\mu_f}(x_{f,0},\mathbf{P}_f)\ \tilde{\mathcal{J}}^{[J,P,|\lambda|]}_{\Lambda\mu}(y_0,\mathbf{Q})\ \varphi^\dagger(x_{i,0},-\mathbf{P}_i)|0\rangle$$

$$\int \frac{dP_{f,0}}{2\pi}\frac{dP_{f,0}}{2\pi} e^{iP_{i,0}(x_{f,0}-y_0)} e^{iP_{f,0}(y_0-x_{i,0})}$$

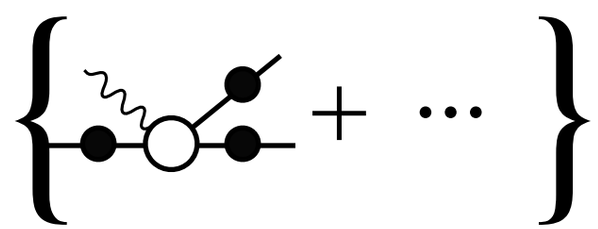

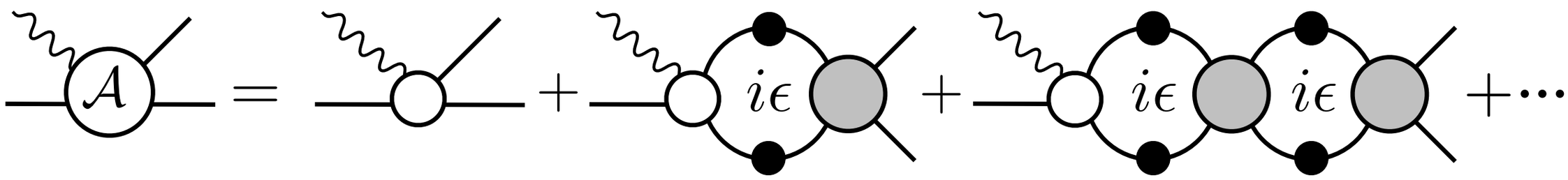

Similar to K-matrix

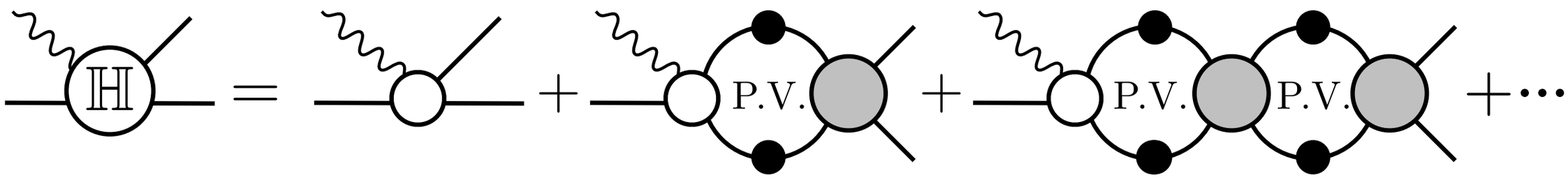

3 POINT CORRELATION FUNCTION

$$C^{(1\to 2)}_{\Lambda_f\mu_f;\Lambda\mu}(x_{f,0}-y_0;y_0-x_{i,0}) = \langle 0|\mathcal{O}_{\Lambda_f\mu_f}(x_{f,0},\mathbf{P}_f)\ \tilde{\mathcal{J}}^{[J,P,|\lambda|]}_{\Lambda\mu}(y_0,\mathbf{Q})\ \varphi^\dagger(x_{i,0},-\mathbf{P}_i)|0\rangle$$

$$\int \frac{dP_{f,0}}{2\pi}\frac{dP_{f,0}}{2\pi} e^{iP_{i,0}(x_{f,0}-y_0)} e^{iP_{f,0}(y_0-x_{i,0})}$$

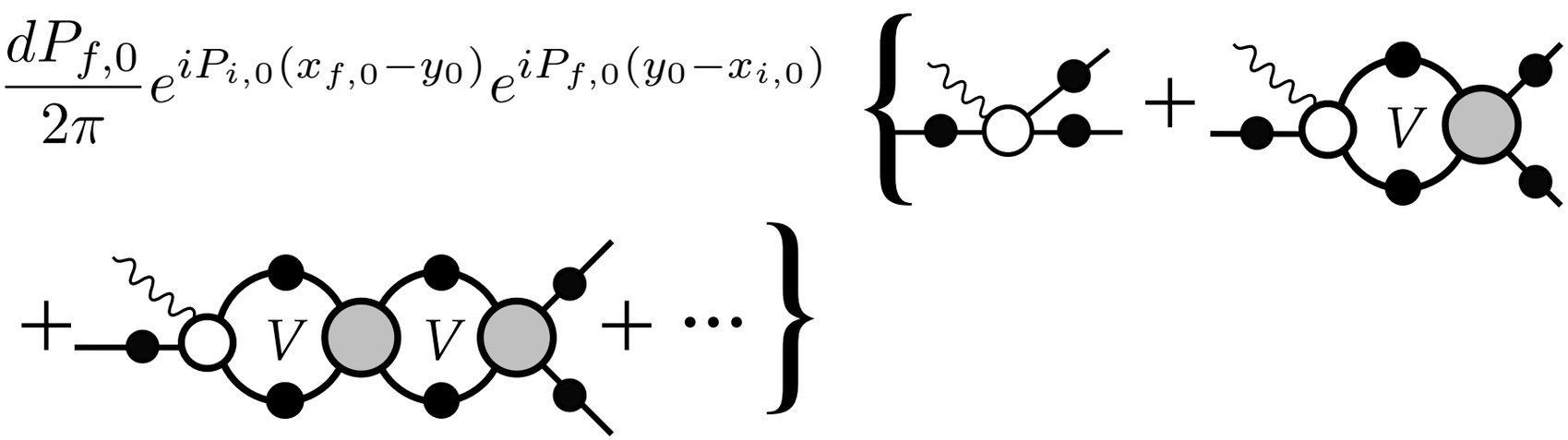

Power-law volume corrections from on-shell intermediate states

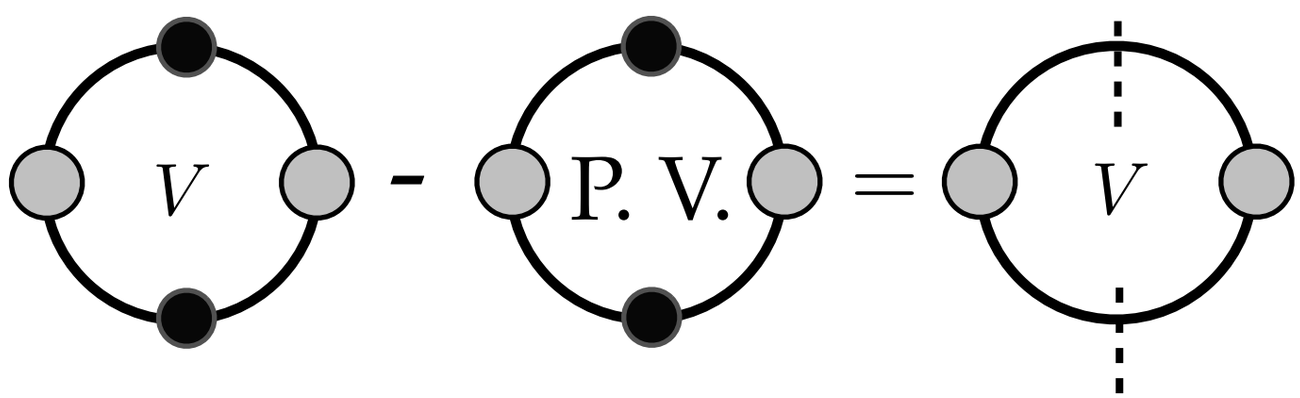

3 POINT CORRELATION FUNCTION

$$C^{(1\to 2)}_{\Lambda_f\mu_f;\Lambda\mu}(x_{f,0}-y_0;y_0-x_{i,0}) = \langle 0|\mathcal{O}_{\Lambda_f\mu_f}(x_{f,0},\mathbf{P}_f)\ \tilde{\mathcal{J}}^{[J,P,|\lambda|]}_{\Lambda\mu}(y_0,\mathbf{Q})\ \varphi^\dagger(x_{i,0},-\mathbf{P}_i)|0\rangle$$

$$\int \frac{dP_{f,0}}{2\pi}\frac{dP_{f,0}}{2\pi} e^{iP_{i,0}(x_{f,0}-y_0)} e^{iP_{f,0}(y_0-x_{i,0})}$$

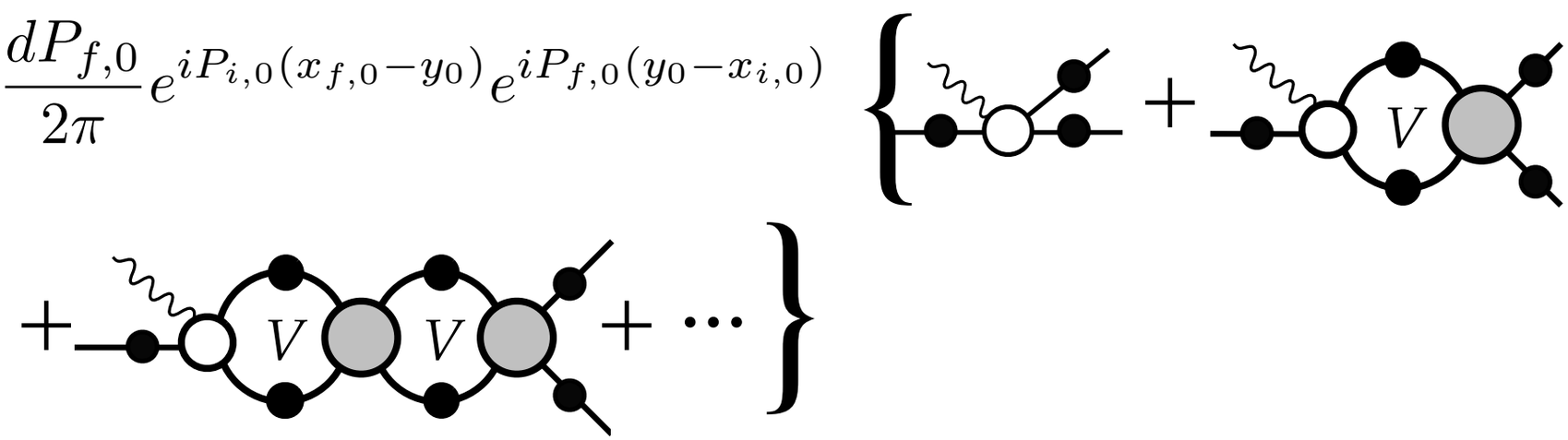

$$= \left(\frac{e^{-(y_0-x_{i,0})E_{\Lambda_i,0}}}{2E_{\Lambda_i,0}}\right)\ L^3 \sum_{n_f} e^{-E_{\Lambda_f,n_f}(x_{f,0}-y_0)}\ V^\dagger_{\mathcal{O},\Lambda_f\mu_f}\ R_{\Lambda_f,n_f}\ \ \mathbb{H}_{\Lambda_f,n_f;\Lambda\mu}$$

to extract the matrix element of interest - one must take the ratio of the 3-point function to 1- and 2-point correlation functions (using same interpolating operators)

"after a little work" (and simultaneously beer and coffee)

$$\left|\langle E_{\lambda_f,n_f}\mathbf{P}_f|\mathcal{J}(0,\mathbf{Q})|E_{\lambda_i,0}\mathbf{P}_i\rangle\right| = \frac{1}{\sqrt{2E_{\lambda_i,0}}}\sqrt{\mathbb{H}^T_{\lambda_f,n_f}\ R_{\lambda_f,n_f}\ \mathbb{H}_{\lambda_f,n_f}}$$

3 POINT CORRELATION FUNCTION

$$\left|\langle E_{\lambda_f,n_f}\mathbf{P}_f|\mathcal{J}(0,\mathbf{Q})|E_{\lambda_i,0}\mathbf{P}_i\rangle\right| = \frac{1}{\sqrt{2E_{\lambda_i,0}}}\sqrt{\mathbb{H}^T_{\lambda_f,n_f}\ R_{\lambda_f,n_f}\ \mathbb{H}_{\lambda_f,n_f}}$$

to get the master formula,

$$\mathcal{A} = \mathbb{H} + \mathbb{K}\ \left(i\mathbb{P}^2/2\right)\ \mathbb{H} + \mathbb{K}\ \left(i\mathbb{P}^2/2\right)\ \mathbb{K}\ \left(i\mathbb{P}^2/2\right)\ \mathbb{H} + \cdots = \left[\frac{1}{1-\mathbb{K}\ \left(i\mathbb{P}^2/2\right)}\right]\mathbb{H}$$

$$= \left[\frac{1}{\mathbb{K}^{-1}-\left(i\mathbb{P}^2/2\right)}\right]\ \mathbb{K}^{-1}\ \mathbb{H} = \mathcal{M}\ \mathbb{K}^{-1}\ \mathbb{H}.$$

$\mathbb{P}$ diagonal, kinematic matrix

$$\mathcal{R}_{\Lambda_f,n_f} = [\mathcal{M}^{-1\dagger}\ \mathbb{K}\ R\ \mathbb{K}\ \mathcal{M}^{-1}]_{\Lambda_f,n_f}$$

$$\left|\langle E_{\Lambda_f,n_f}\mathbf{P}_f;L|\tilde{\mathcal{J}}^{[J,P,|\lambda|]}_{\Lambda\mu}(0,\mathbf{P}_f-\mathbf{P}_i)|E_{\Lambda_i,0}\mathbf{P}_i;L\rangle\right| = \frac{1}{\sqrt{2E_{\Lambda_i,0}}}\sqrt{\left[\mathcal{A}^\dagger_{\Lambda_f,n_f;\Lambda\mu}\ \mathcal{R}_{\Lambda_f,n_f}\ \mathcal{A}_{\Lambda_f,n_f;\Lambda\mu}\right]}$$

master formula: finite-volume matrix element of a current that

- can inject arbitrary four-momentum and angular momentum
- includes all inelastic coupled channels, “a”
- incorporates partial-wave mixing (from box and/or physics)

3 POINT CORRELATION FUNCTION

$$\left|\langle E_{\lambda_f,n_f}\mathbf{P}_f|\mathcal{J}(0,\mathbf{Q})|E_{\lambda_i,0}\mathbf{P}_i\rangle\right| = \frac{1}{\sqrt{2E_{\lambda_i,0}}}\sqrt{\mathbb{H}^T_{\lambda_f,n_f}\ R_{\lambda_f,n_f}\ \mathbb{H}_{\lambda_f,n_f}}$$

to get the master formula,

$$\mathcal{A} = \mathbb{H} + \mathbb{K}\ \left(i\mathbb{P}^2/2\right)\ \mathbb{H} + \mathbb{K}\ \left(i\mathbb{P}^2/2\right)\ \mathbb{K}\ \left(i\mathbb{P}^2/2\right)\ \mathbb{H} + \cdots = \left[\frac{1}{1-\mathbb{K}\ \left(i\mathbb{P}^2/2\right)}\right]\mathbb{H}$$

$$= \left[\frac{1}{\mathbb{K}^{-1}-\left(i\mathbb{P}^2/2\right)}\right]\ \mathbb{K}^{-1}\ \mathbb{H} = \mathcal{M}\ \mathbb{K}^{-1}\ \mathbb{H}.$$

$\mathbb{P}$ diagonal, kinematic matrix

$$\mathcal{R}_{\Lambda_f,n_f} = [\mathcal{M}^{-1\dagger}\ \mathbb{K}\ R\ \mathbb{K}\ \mathcal{M}^{-1}]_{\Lambda_f,n_f}$$

$$\left|\langle E_{\Lambda_f,n_f}\mathbf{P}_f;L|\tilde{\mathcal{J}}^{[J,P,|\lambda|]}_{\Lambda\mu}(0,\mathbf{P}_f-\mathbf{P}_i)|E_{\Lambda_i,0}\mathbf{P}_i;L\rangle\right| = \frac{1}{\sqrt{2E_{\Lambda_i,0}}}\sqrt{\left[\mathcal{A}^\dagger_{\Lambda_f,n_f;\Lambda\mu}\ \mathcal{R}_{\Lambda_f,n_f}\ \mathcal{A}_{\Lambda_f,n_f;\Lambda\mu}\right]}$$

Matrix-generalization of Lellouch-Lüscher

3 POINT CORRELATION FUNCTION

$$\left|\langle E_{\lambda_f,n_f}\mathbf{P}_f|\mathcal{J}(0,\mathbf{Q})|E_{\lambda_i,0}\mathbf{P}_i\rangle\right| = \frac{1}{\sqrt{2E_{\lambda_i,0}}}\sqrt{\mathbb{H}^T_{\lambda_f,n_f}\ R_{\lambda_f,n_f}\ \mathbb{H}_{\lambda_f,n_f}}$$

to get the master formula,

$$\mathcal{A} = \mathbb{H} + \mathbb{K}\ \left(i\mathbb{P}^2/2\right)\ \mathbb{H} + \mathbb{K}\ \left(i\mathbb{P}^2/2\right)\ \mathbb{K}\ \left(i\mathbb{P}^2/2\right)\ \mathbb{H} + \cdots = \left[\frac{1}{1-\mathbb{K}\ \left(i\mathbb{P}^2/2\right)}\right]\mathbb{H}$$

$$= \left[\frac{1}{\mathbb{K}^{-1}-\left(i\mathbb{P}^2/2\right)}\right]\ \mathbb{K}^{-1}\ \mathbb{H} = \mathcal{M}\ \mathbb{K}^{-1}\ \mathbb{H}.$$

$\mathbb{P}$ diagonal, kinematic matrix

$$\mathcal{R}_{\Lambda_f,n_f} = [\mathcal{M}^{-1\dagger}\ \mathbb{K}\ R\ \mathbb{K}\ \mathcal{M}^{-1}]_{\Lambda_f,n_f}$$

$$\left|\langle E_{\Lambda_f,n_f}\mathbf{P}_f;L|\tilde{\mathcal{J}}^{[J,P,|\lambda|]}_{\Lambda\mu}(0,\mathbf{P}_f-\mathbf{P}_i)|E_{\Lambda_i,0}\mathbf{P}_i;L\rangle\right| = \frac{1}{\sqrt{2E_{\Lambda_i,0}}}\sqrt{\left[\mathcal{A}^\dagger_{\Lambda_f,n_f;\Lambda\mu}\ \mathcal{R}_{\Lambda_f,n_f}\ \mathcal{A}_{\Lambda_f,n_f;\Lambda\mu}\right]}$$

to go from these subduced infinite-volume transition amplitudes to back to O(3) symmetric amplitudes

See talk by Christian Shultz
Thur. 3:35

3 POINT CORRELATION FUNCTION

$$K \to \pi\pi$$

Need to know phase shift well enough to control derivative

Lellouch-Lüscher

$$\frac{|\mathbb{H}_{S,n_f} \ \cos\delta_S|^2}{|\langle \pi\pi, E_{n_f}\mathbf{P}, \Lambda_f\mu_f; L|\tilde{\mathcal{J}}^{[0,-1,|0|]}_{\Lambda\mu}(0,\mathbf{0})|K, E_K\mathbf{P}; L\rangle|^2} = \frac{16\pi E_i \ E^*_{n_f}}{q^*_{n_f}\xi} \frac{\partial(\delta_S + \phi^{\mathbf{d}}_{00})}{\partial P_{0,M}}\Big|_{P_{0,M}=E_{n_f}}$$

Finite-Volume Matrix Element

$$|\mathbb{H}_{S,n_f} \cos\delta_S| = |\mathcal{A}_{S,n_f}|$$

Infinite-Volume Transition Amplitude

$$q^*_{\Lambda,n}\cot\phi^{\mathbf{d}}_{lm} = -\frac{4\pi}{q^{*l}_{\Lambda,n}} c^{\mathbf{d}}_{lm}(q^{*2}_{\Lambda,n}; L)$$

pseudo-phase

(Euler)-Reimann-zeta Function

$$c^{\mathbf{d}}_{lm}(k^{*2}_j; L) = \frac{\sqrt{4\pi}}{\gamma L^3}\left(\frac{2\pi}{L}\right)^{l-2} \mathcal{Z}^{\mathbf{d}}_{lm}[1; (k^*_j L/2\pi)^2], \qquad \mathcal{Z}^{\mathbf{d}}_{lm}[s; x^2] = \sum_{\mathbf{r}\in\mathcal{P}_{\mathbf{d}}} \frac{|\mathbf{r}|^l Y_{l,m}(\mathbf{r})}{(r^2 - x^2)^s}$$

3 POINT CORRELATION FUNCTION

$$\gamma\pi \to \pi\pi$$

lowest energy state is P-wave

See talk by Christian Shultz
Thur. 3:35

$$\frac{|\mathbb{H}_{\Lambda_f\mu_f,n_f;\Lambda\mu}\ \cos\delta_P|^2}{|\langle\pi\pi,E_{n_f}\mathbf{P}_f,\Lambda_f\mu_f;L|\tilde{\mathcal{J}}^{[1,-1,|\lambda|]}_{\Lambda\mu}(0,\mathbf{P}_f-\mathbf{P}_i)|\pi,E_i\mathbf{P}_i;L\rangle|^2} = 16\pi E_i\ \frac{E_{n_f}}{q^*_{n_f}\ \xi}\ \sin^2\delta_P$$

$$\times\left[\csc^2\delta_P\frac{\partial\delta_P}{\partial P_{0,M}} + \csc^2\phi^{\mathbf{d}}_{00}\frac{\partial\phi^{\mathbf{d}}_{00}}{\partial P_{0,M}} + \sum_{m=0,2}\alpha_{2m,\Lambda_f}\ \csc^2\phi^{\mathbf{d}}_{2m}\frac{\partial\phi^{\mathbf{d}}_{2m}}{\partial P_{0,M}}\right]\Bigg|_{P_{0,M}=E_{n_f}}$$

$$|\mathbb{H}_{\Lambda_f\mu_f,n_f;\Lambda\mu}\cos\delta_P| = |\mathcal{A}_{\Lambda_f\mu_f,n_f;\Lambda\mu}|$$

Infinite-Volume Transition Amplitude

3 POINT CORRELATION FUNCTION

Comment on recent calculation of $B \to K^* \ell^+ \ell^-$

Horgan, Liu, Meinel, Wingate: PRL 112 (2014)

PRD 89 (2014)

1. Calculation treated K* as stable - need to use correct FV formalism - includes S-P wave mixing (this is all treated in our paper arXiv:1406.5965)
2. I=1/2 Kπ scattering has "quark disconnected" graphs:

   this means the staggered action will give rise to unitarity violating "haripin" interactions in the S-channel graphs, invalidating the Lüscher formalism for understanding the two-hadron spectrum

I believe the hairpin issue makes the calculation practically impossible - at least with our current understanding of scattering with PQ effects

CONCLUSIONS

- we have extended the Lellouch-Lüscher method to determine a "master formula" describing the mapping between finite-volume matrix element calculations and the corresponding infinite volume transition amplitudes of a current that
  - can inject arbitrary four-momentum and angular momentum
  - includes all inelastic coupled channels
  - incorporates partial-wave mixing (from box and/or physics)
- This new formalism is very powerful and makes as few approximations as possible: it is model-independent, non-perturbative and valid below inelastic thresholds

THANKS

- I would like to particularly thank my younger colleagues who "held my hand" as I learned how to think of these problems in this "modern" fashion

Raúl Briceño
Max Hansen

Thank You