Light anti-quarks Sivers function at Fermilab SpinQuest

- XXVIII International Workshop on Deep-Inelastic Scattering and Related Subjects

  Virtual Event at Stony Brook University
  Apr 14, 2021, Stony Brook, NY

LANL P-3: **M. Yurov**
E1039 SpinQuest collaboration

SIVERS FUNCTION

- Eight LO Transverse-Momentum-Dependent (TMD) PDFs

Nucleon pol. \ Parton pol.	U	L	T
U	Density, f_1		Boer-Molder, $h_1^\perp$
L		Helicity, g_1	Worm gear, $h_{1L}^\perp$
T	Sivers, $f_{1T}^\perp$	Worm gear, g_{1T}	Transversity, h_1 Pretzelosity, $h_{1T}^\perp$

- Sivers function - transverse momentum distribution of unpolarized quarks in a transversely polarized proton
  - $f_{1T}^\perp(x, k_T)$ =
  - originally proposed to explain and predict results of SSA experiments (E704) $pp^\uparrow \to \pi X$
  - points to possible intrinsic k_T imbalance; leads to asymmetry

Phys. Lett. B 264, 462 (1991)

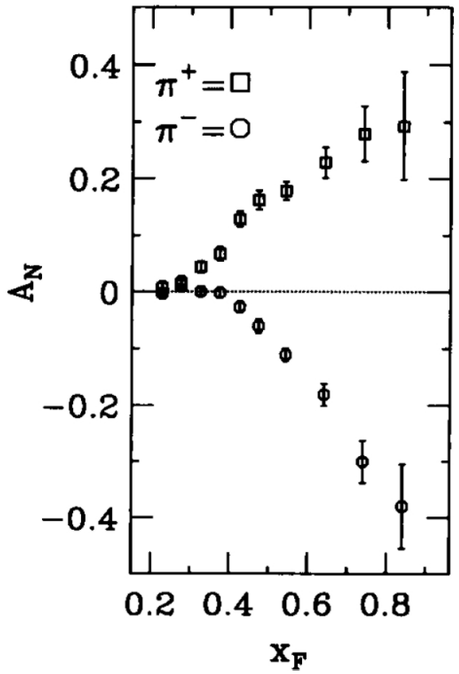

SEA QUARK SIVERS SIGNIFICANCE

- $\bar{u}, \bar{d}$ Sivers correlates anti quark OAM and total spin of the proton
- important to understand theoretically and experimentally
- sea quark OAM could be a major part of missing spin
- non-zero Sivers for seq-quarks implies non-zero sea quark OAM

Lattice QCD: K.-F. Liu *et al* arXiv:1203.6388

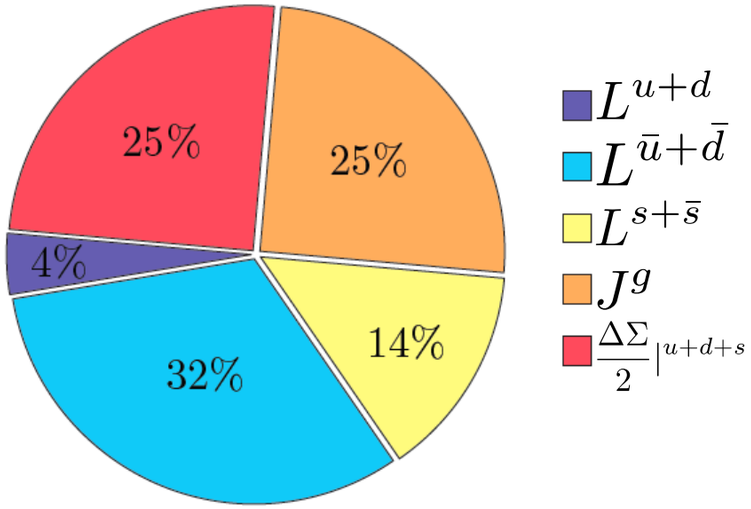

SEA QUARK SIVERS SIGNIFICANCE

- exploration of nucleon's sea at Fermilab
  - measurements of the asymmetry between $\bar{u}$ and $\bar{d}$ in the proton

E866/NuSea

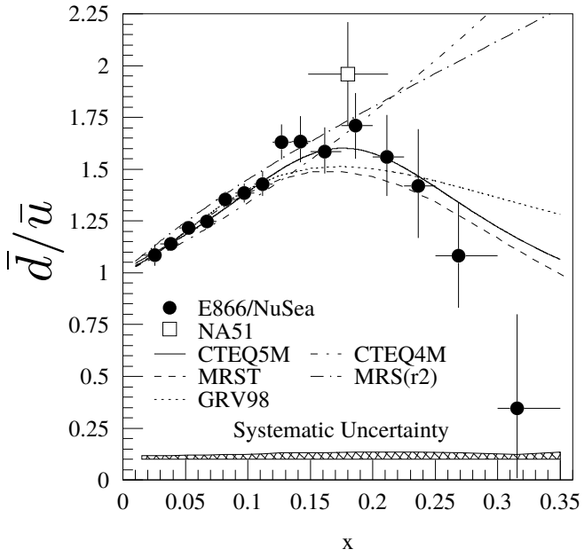

E906/SeaQuest

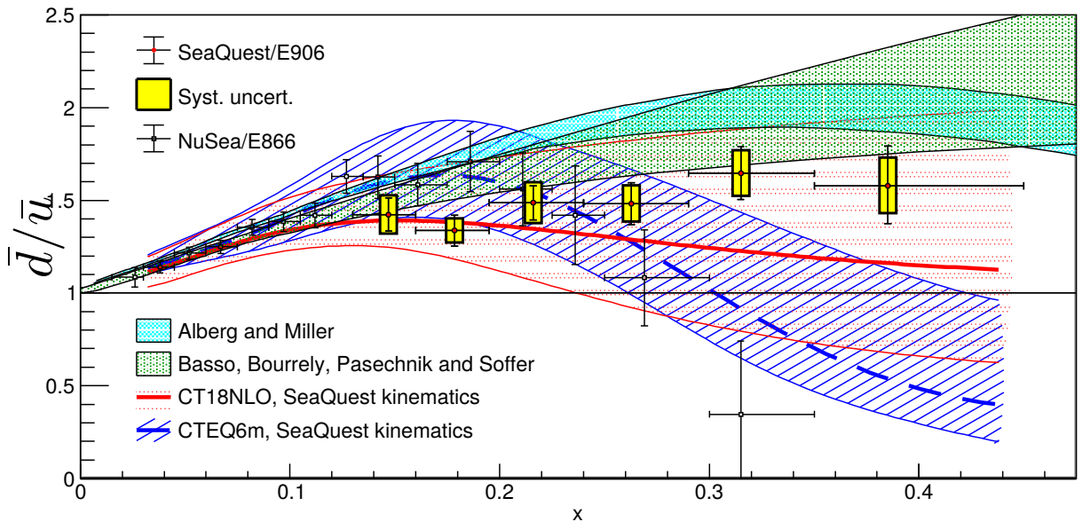

New results - see Kei Nagai's talk!
15 Apr 2021, 09:12
Nature 590, 561 (2021)

- meson cloud model, statistical model, ...

$$|p\rangle \propto |p_0\rangle + |n\pi^+\rangle + |\Delta^{++}\pi^-\rangle + \ldots$$

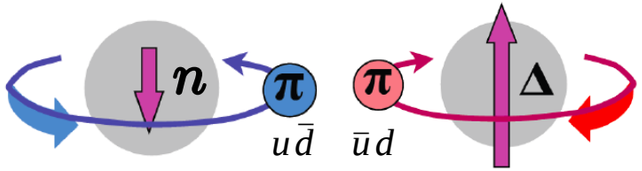

- measurements of Sivers function would provide important constraints on the models

SIVERS GLOBAL EXTRACTIONS

- $\bar{u}, \bar{d}$ Sivers remains poorly constrained
- Extraction by global analyses

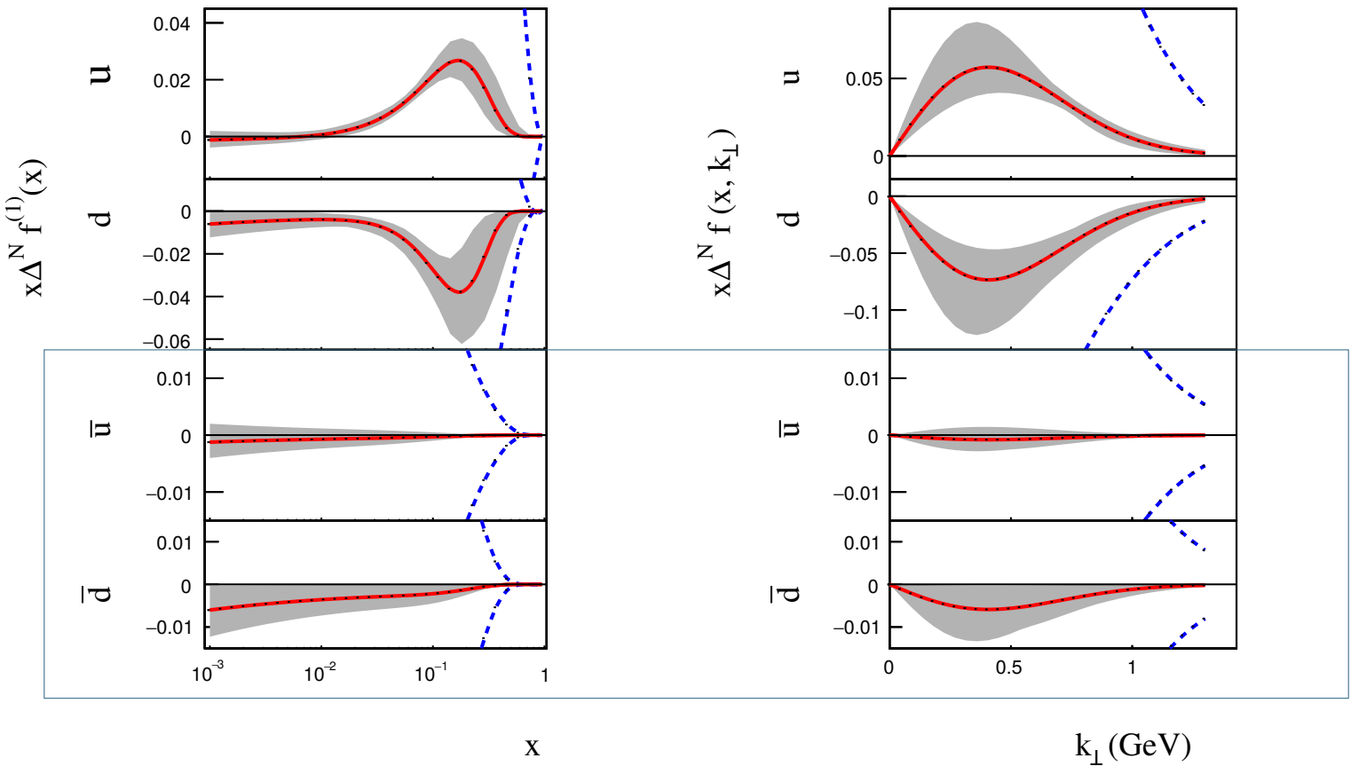

Anselmino, M. et. all, https://doi.org/10.1007/JHEP04(2017)046

ACCESSING SIVERS

- probing quark and antiquark structure of nucleon

$$e + p^{\uparrow} \to e' \pi X$$

Polarized Semi-Inclusive DIS

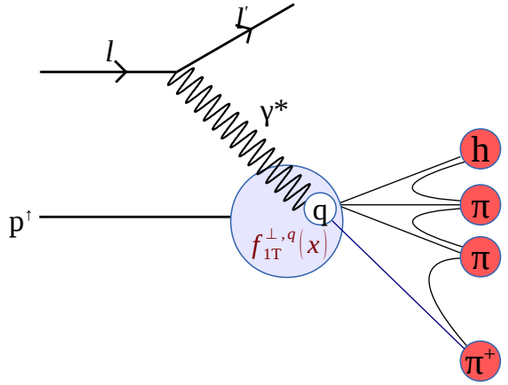

$$A_{UT}^{SIDIS} \propto \frac{\sum_q e_q^2 f_{1T}^{\perp,q}(x) \otimes D_1^q(z)}{\sum_q e_q^2 f_1^q(x) \otimes D_1^q(z)}$$

- L-R asymmetry in hadron production
- quark to hadron fragmentation function
- valence-sea quark: mixed

$$p + p^{\uparrow} \to \mu^+ \mu^- X$$

Polarized Drell-Yan

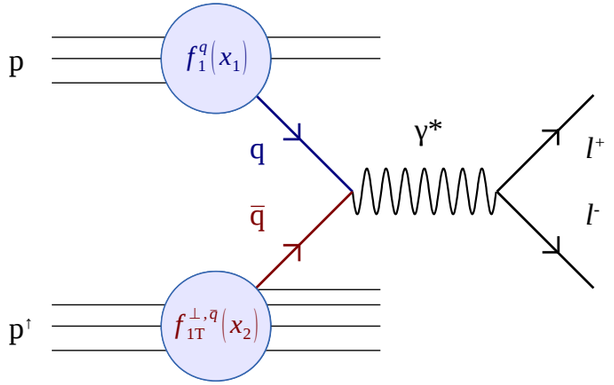

$$A_N^{DY} \propto \frac{\sum_q e_q^2 \left[f_1^q(x_1) \cdot f_{1T}^{\perp,\bar{q}}(x_2) + 1 \leftrightarrow 2 \right]}{\sum_q e_q^2 \left[f_1^q(x_1) \cdot f_1^{\bar{q}}(x_2) + 1 \leftrightarrow 2 \right]}$$

- L-R asymmetry in Drell-Yan production
- no fragmentation function
- valence-sea quark: isolated
- production of two TMDs (Sivers/Boer-Molder)

ACCESSING SIVERS

- has not been tried yet
  - the only high statistics experiment sensitive to sea quarks at large x

quark	SIDIS	Drell-Yan
valence	known	COMPASS
sea	poor sensitivity	**mostly unknown**

E1039

- selects sea quark from target
  - $$\frac{d^2\sigma}{dx_b dx_t} = \frac{4\pi\alpha^2}{9x_b x_t}\frac{1}{s}\sum_i e_i^2 \times\{q_i(x_b)\bar{q}_i(x_t) + \bar{q}_i(x_b)q_i(x_t)\}$$
  - for E1039 kinematic configuration first term dominates
- measure Sivers asymmetry for both
  - $\bar{u}(x), \bar{d}(x)$
  - determine possible flavor asymmetry

E1039 EXPERIMENT

$$p + p^{\uparrow} \to \mu^+\mu^- X$$

Polarized Drell-Yan

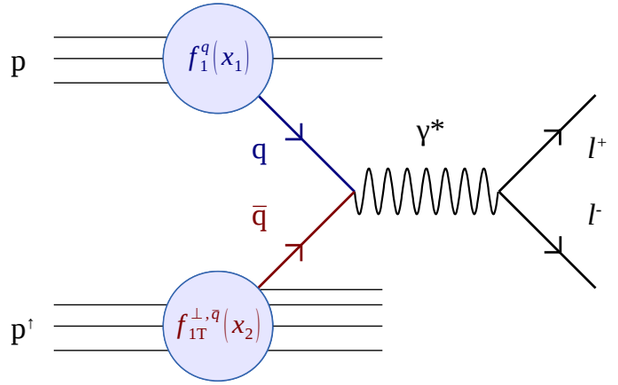

$$A_N^{DY} \propto \frac{\sum_q e_q^2\left[f_1^q(x_1)\cdot f_{1T}^{\perp,\bar{q}}(x_2) + 1 \leftrightarrow 2\right]}{\sum_q e_q^2\left[f_1^q(x_1)\cdot f_1^{\bar{q}}(x_2) + 1 \leftrightarrow 2\right]}$$

- L-R asymmetry in Drell-Yan production
- no fragmentation function
- valence-sea quark: isolated
- production of two TMDs (Sivers/Boer-Molder)

FERMILAB SPINQUEST (E1039)

- Measure azimuthal asymmetry in Drell-Yan dimuons from protons on a polarized target

$$A_N(p_{\rm beam} + p^{\uparrow}_{\rm trg} \to {\rm DY}) \propto \frac{N_L^{DY} - N_R^{DY}}{N_L^{DY} + N_R^{DY}} \propto \frac{f_{1T}^{\perp,\bar{u}}(x_t)}{f_1^{\bar{u}}(x_t)}$$

- Primary goals
  - sign and value of sea quark Sivers function
  - sea quark Sivers flavor dependence
  - if non-zero, "smoking gun" evidence for sea quark OAM

- asymmetry estimates (E1039 proposal)
  - Two years of data taking
  - time is split between NH3 and ND3 targets

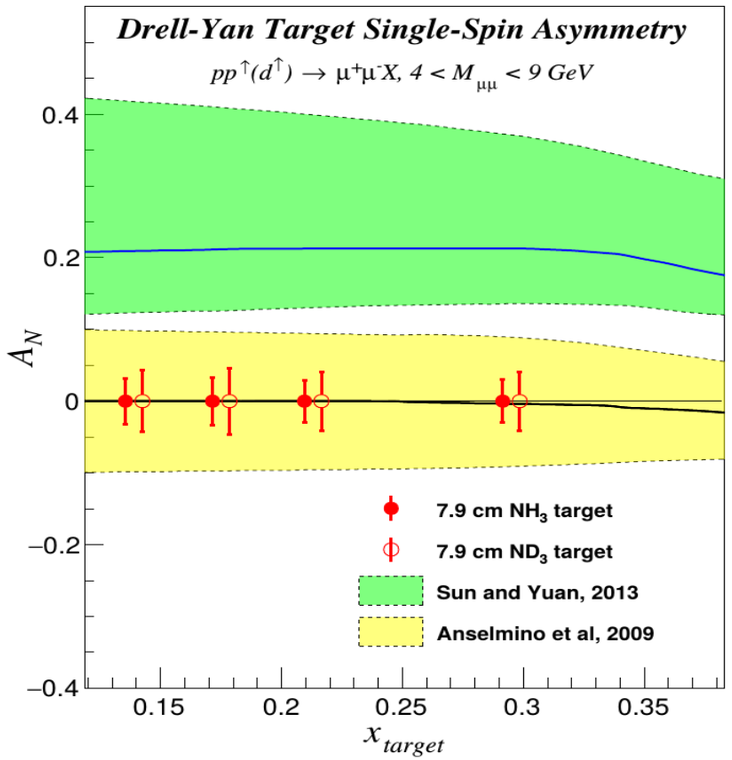

FERMILAB SPINQUEST (E1039)

- unpolarized proton beam from Fermilab Main Injector
- Energy and duty cycle
  - 120 GeV $\sqrt{S} = 15.5GeV$
  - spill: ~4s/min, ~10^{12} protons/spill
- Bunch
  - Length: 1ns
  - Interval: 19ns (~53MHz)
- 7.7×10^{17} protons on target/year

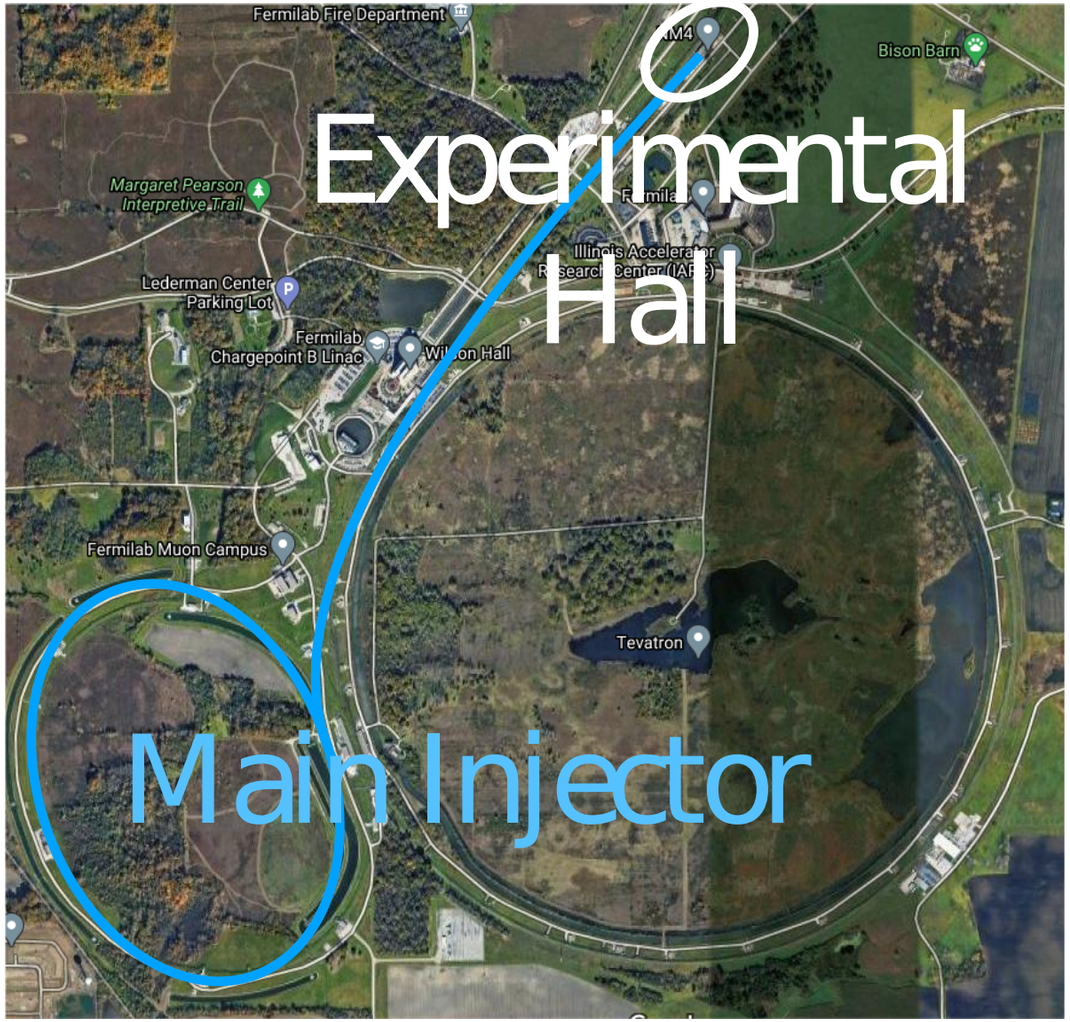

FERMILAB SPINQUEST (E1039)

- SeaQuest E906 muon spectrometer
- Magnets
  - focusing with hadron absorber and beam dump
  - analysing
- Four tracking stations
  - Drift chambers
  - Proportional tubes
  - Trigger hodoscope
- kinematics + typical DY event

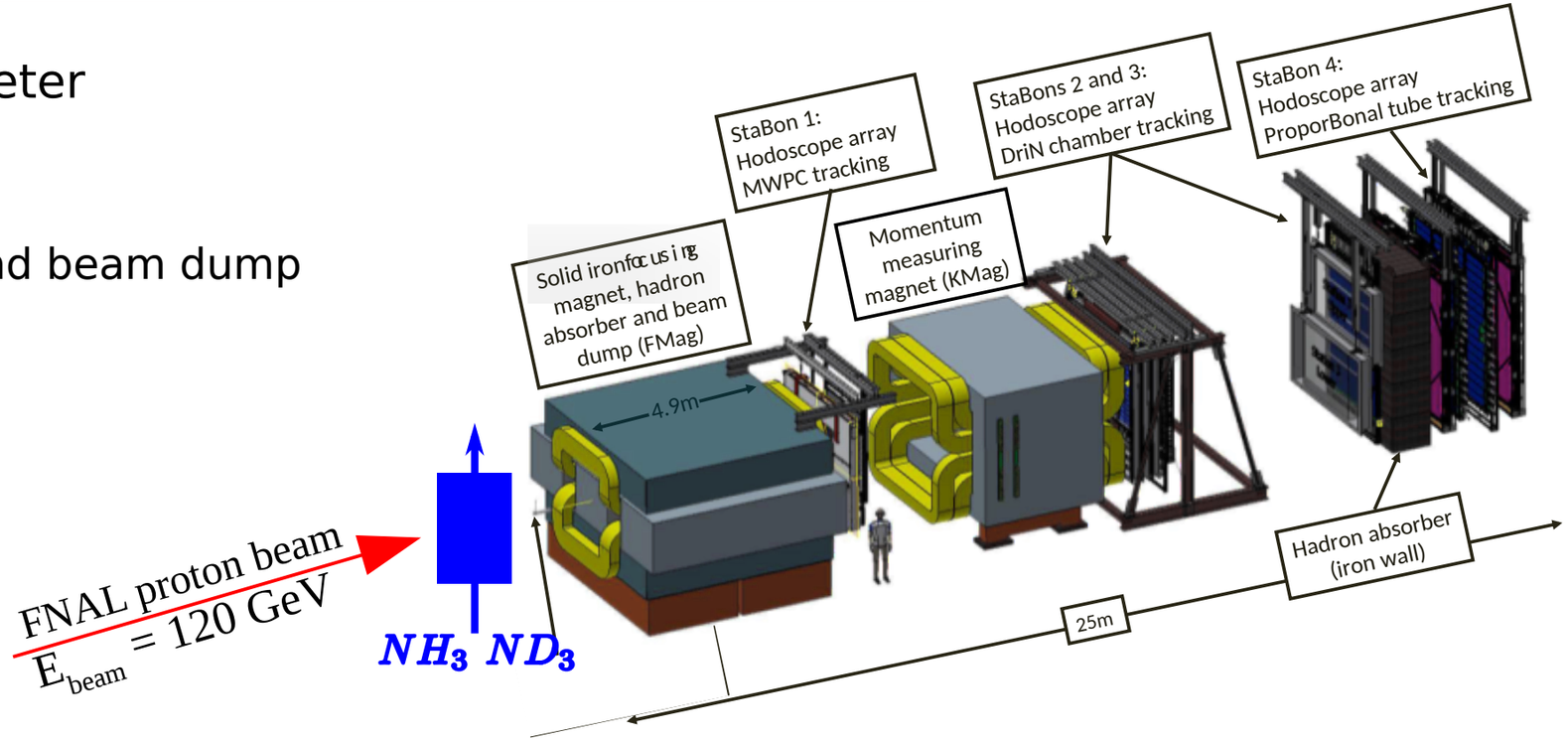

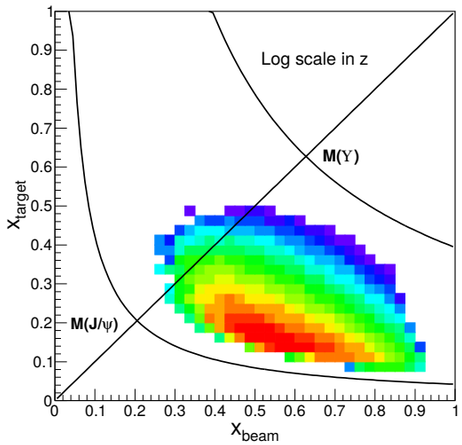

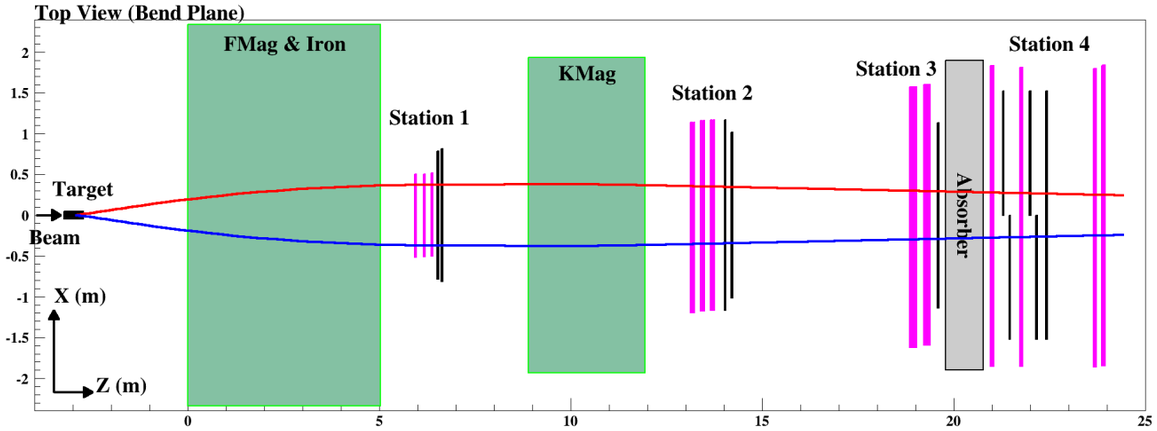

FERMILAB SPINQUEST (E1039)

- LANL/UVA solid polarized target
- DNP process to get nucleon polarized
  - low temperatures, high B field - $P = tanh\left(\frac{\mu B}{kT}\right)$
  - induce "forbidden" transitions with approriate u-waves
  - difference in electron/proton relaxation times is key for polarization build up
  - polarizable material (preirradiation - paramagnetic centers)
  - achieves >90% proton (>40% deuteron) polarization
- use CW-NMR to get polarization measured
- SpinQuest polarized target configuration
  - material: frozen beads of NH_3 ND_3 (8cm long caps, 2-3 cups on target ladder)
  - 5T vertical SC magnet
  - high cooling capacity 1K 4He evaporation refrigerator
  - high power u-wave system
  - 3 NMR coils per cup

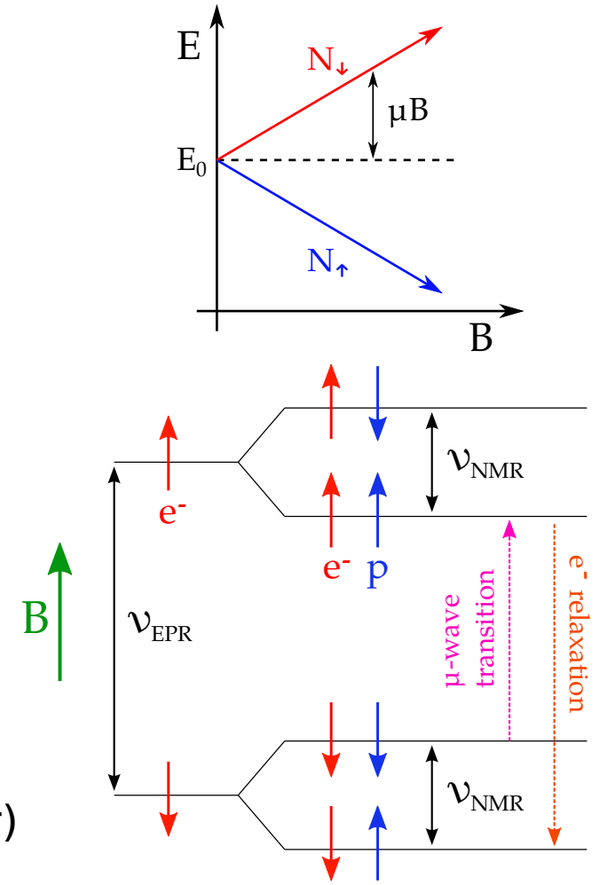

STATUS & MILESTONES

- major experimental hall modifications after E906 decommissioning
  - new collimator in the beamline
  - new radiation environment simulation and design
  - platform construction for target infrastructure
  - target cave construction

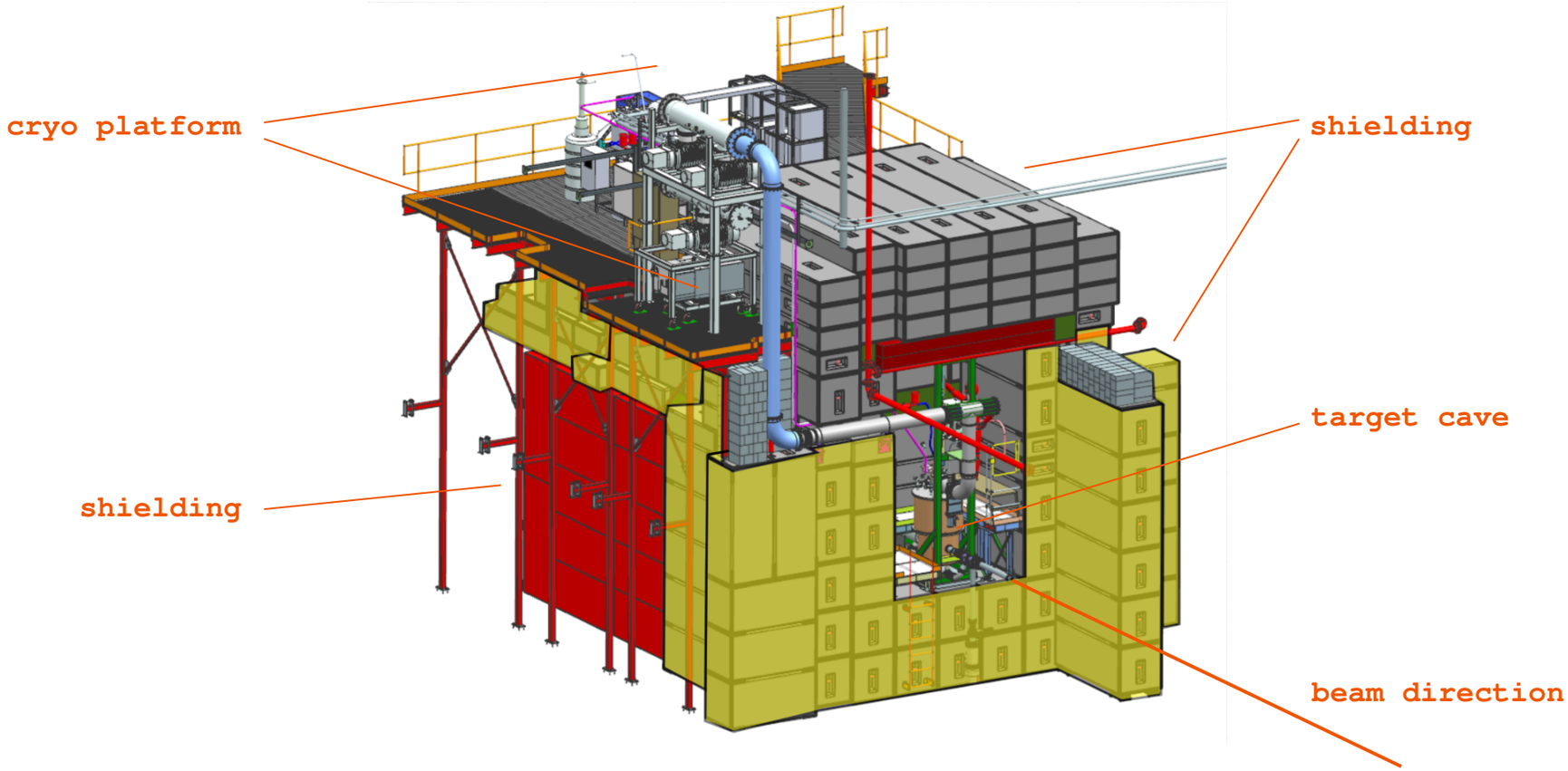

STATUS & MILESTONES

- major experimental hall modifications after E906 decommissioning
  - new collimator in the beamline
  - new radiation environment simulation and design
  - platform construction for target infrastructure
  - target cave construction
- spectrometer upgrades
  - dedicated vertex trigger
  - dark photon hodoscope
- fast online reconstruction

NM4: looking upstream

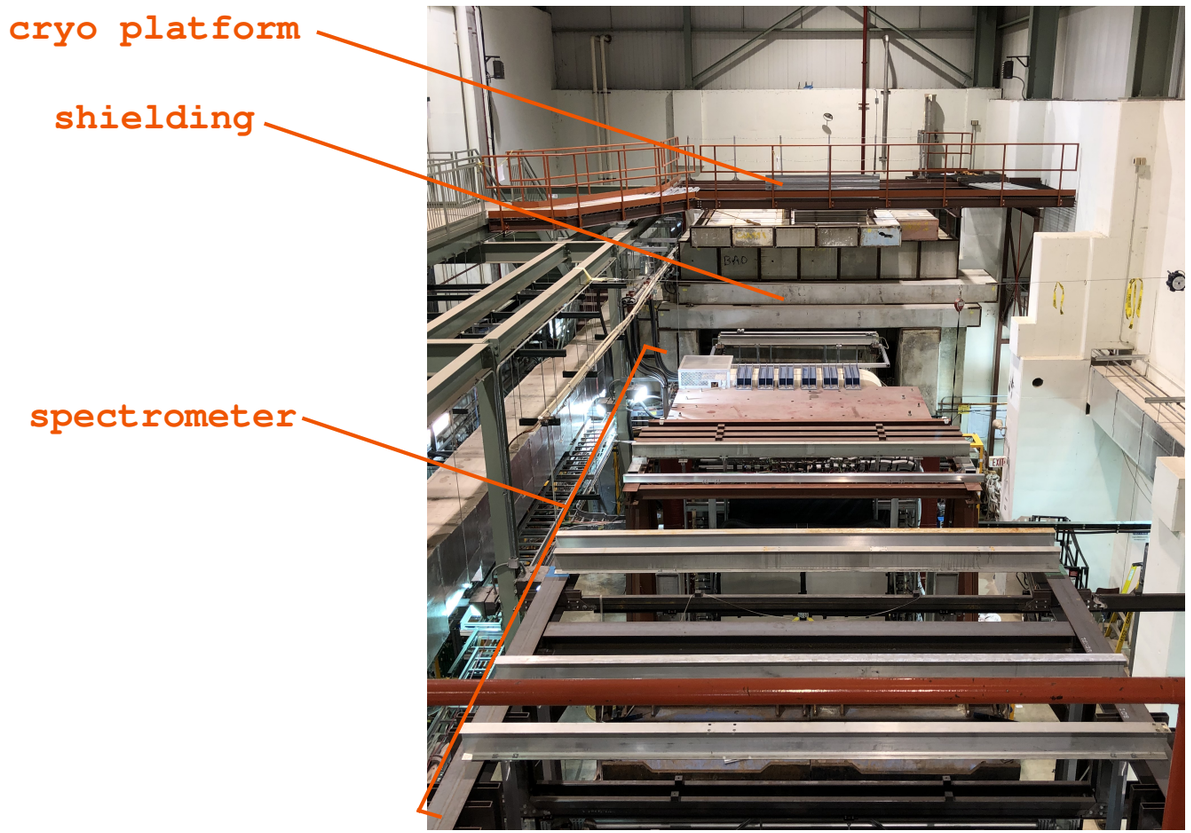

STATUS & MILESTONES

- polarized target system - major effort by LANL and UVA
  - change of the SC magnet field direction
  - manufacturing target inserts and fridge modifications
  - a set of (high volume) roots blowers
  - new high power u-wave source

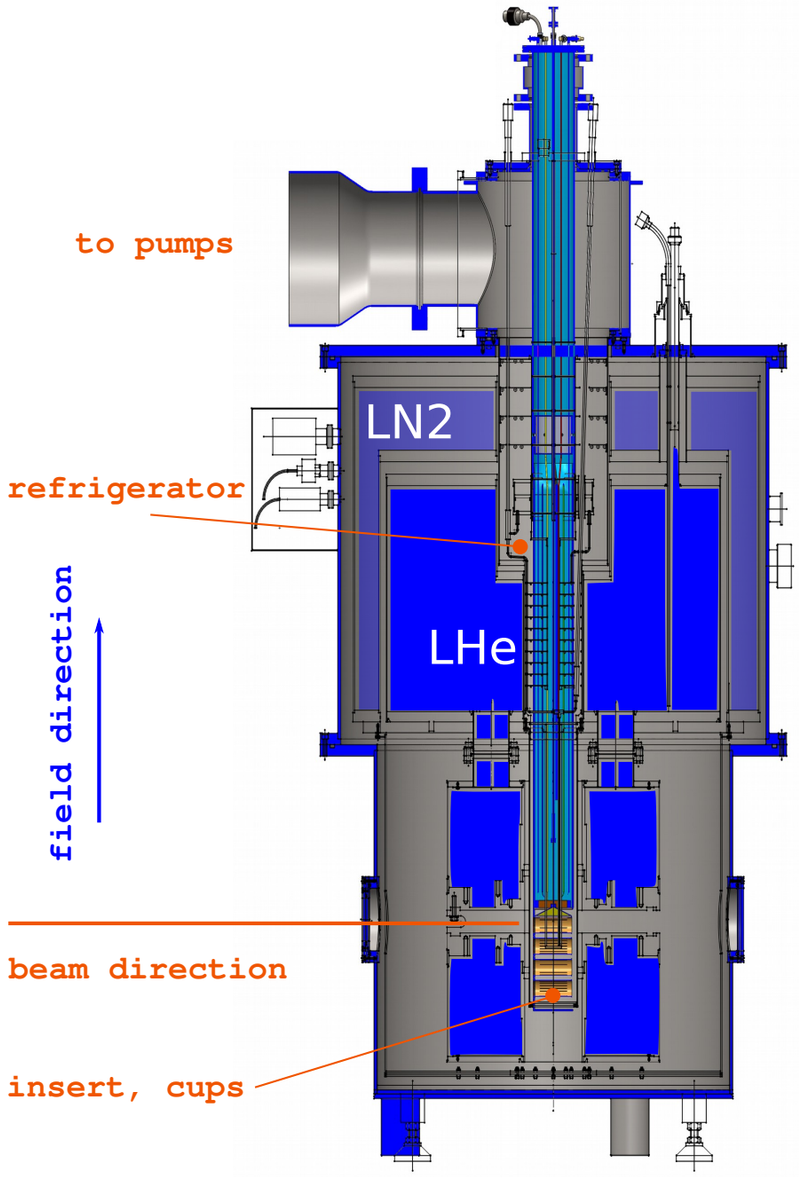

STATUS & MILESTONES

- polarized target system - major effort by LANL and UVA
  - change of the SC magnet field direction
  - manufacturing target inserts and fridge modifications
  - a set of (high volume) roots blowers
  - new high power u-wave source
- 4He liquefaction plant - major effort (QT)
  - DOE requirement
  - capacity: ~200L/day of LHe

STATUS & MILESTONES

- polarized target system - major effort by LANL and UVA
  - change of the SC magnet field direction
  - manufacturing target inserts and fridge modifications
  - a set of (high volume) roots blowers
  - new high power u-wave source
- 4He liquefaction plant - major effort (QT)
  - DOE requirement
  - capacity: ~200L/day of LHe
- new NMR system - major effort by LANL and UVA
  - support for 9 NMR channels + spares
  - double wide VME module
  - electronic LCR and phase tune
  - cold NMR

new Q-meter boards

crate controller

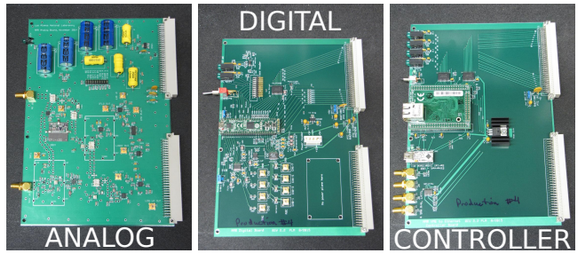

new LANL NMR setup

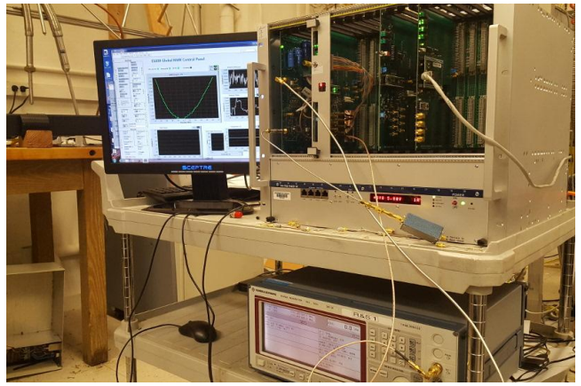

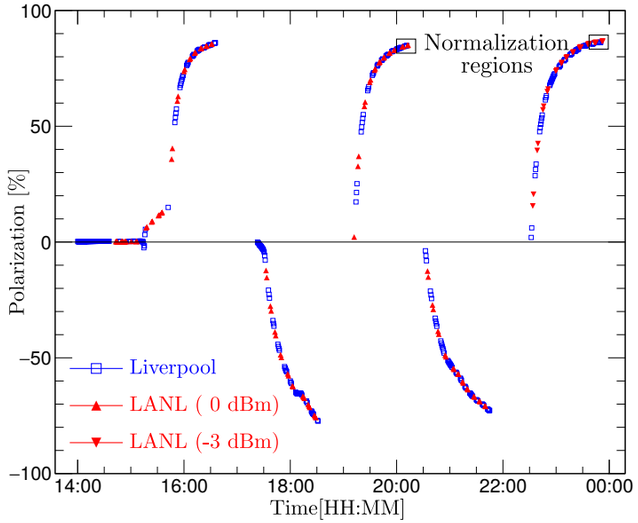

STATUS & MILESTONES

- SpinQuest timeline

May 2018	E906 decommissioning
May 2018	granted Stage-2 approval
June 2019	target system shipped from UVA to FNAL
2019-2020	spectrometer commissioned (cosmics)
2020-2021	target/He liquefier installation
2021-2022	initial beam commissioning
2022	start data taking, SpinQuest approved to run 2 years

CONCLUSION

- SpinQuest is a polarized Drell-Yan experiment
  - aims to measure sea quark Sivers asymmetry
  - light anti quarks Sivers function is not well known
  - if non zero - a “Smoking Gun” evidence for $L_{\bar{q}} \neq 0$
- Projected statistical uncertainty ~3-5% for two-year run
  - will use alternating NH3 and ND3 polarized targets
  - extract Sivers function for both $\bar{u}$ and $\bar{d}$
- Installation and commissionning is under way

THANK YOU