Integration of the Silicon Pixels into sPHENIX

Rachid Nouicer

Richard Ruggiero and Chris Pontieri

BNL

sPHENIX Tracking Meeting, February 26th, 2016

How to integrate Silicon Pixels into sPHENIX?

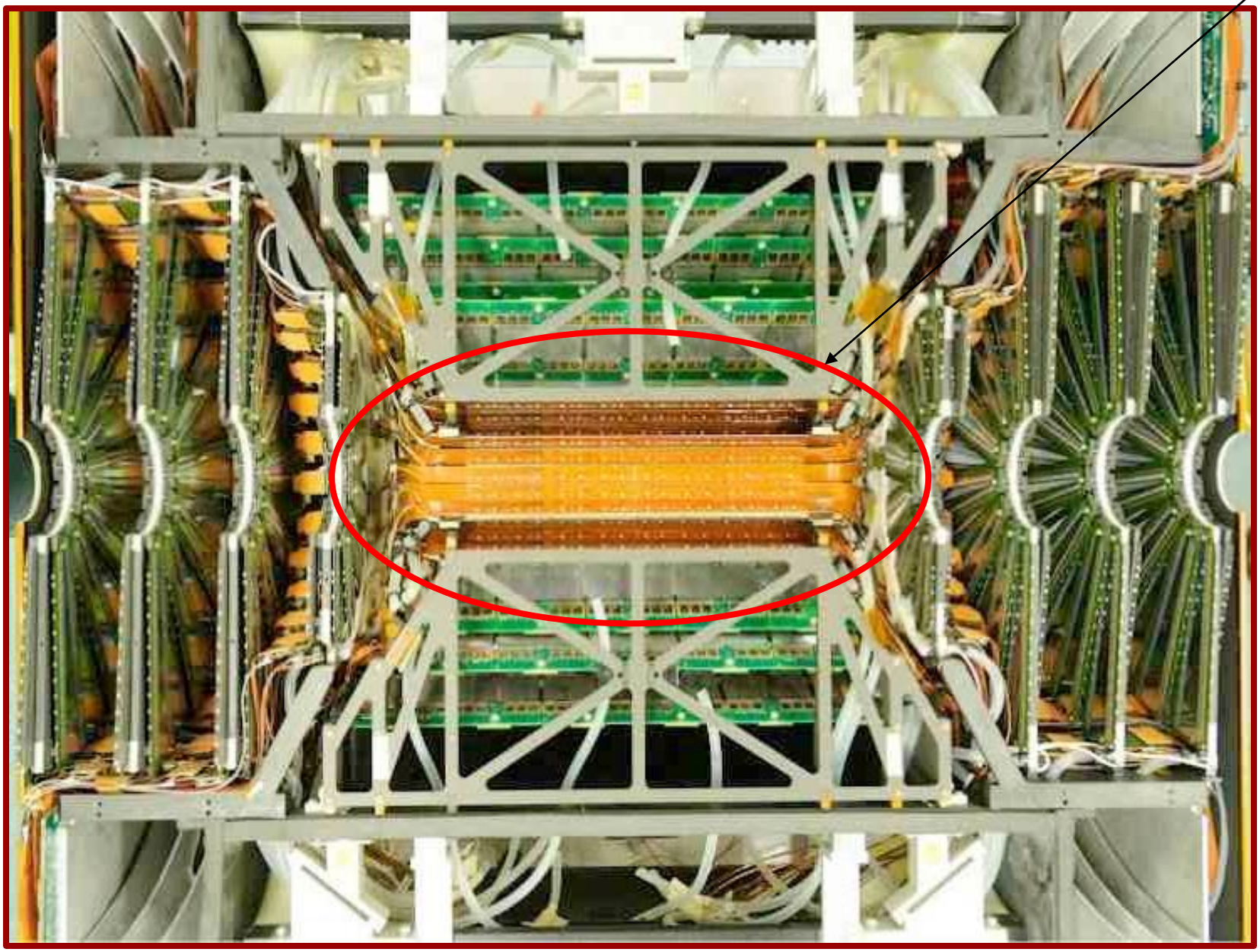

Pixels layers P0 and P1 in sPHENIX

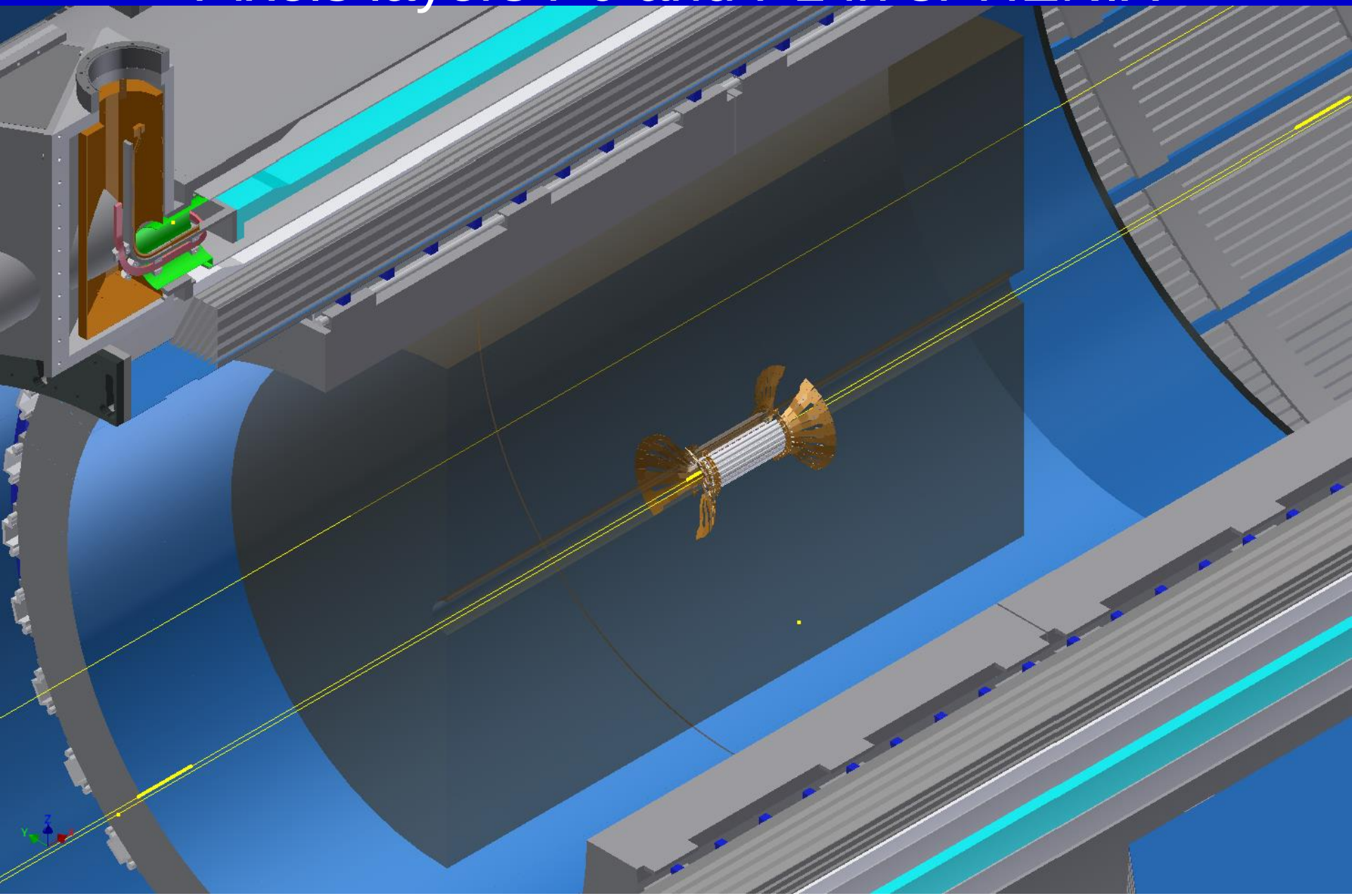

Tracking Envelop in sPHENIX: 78 cm

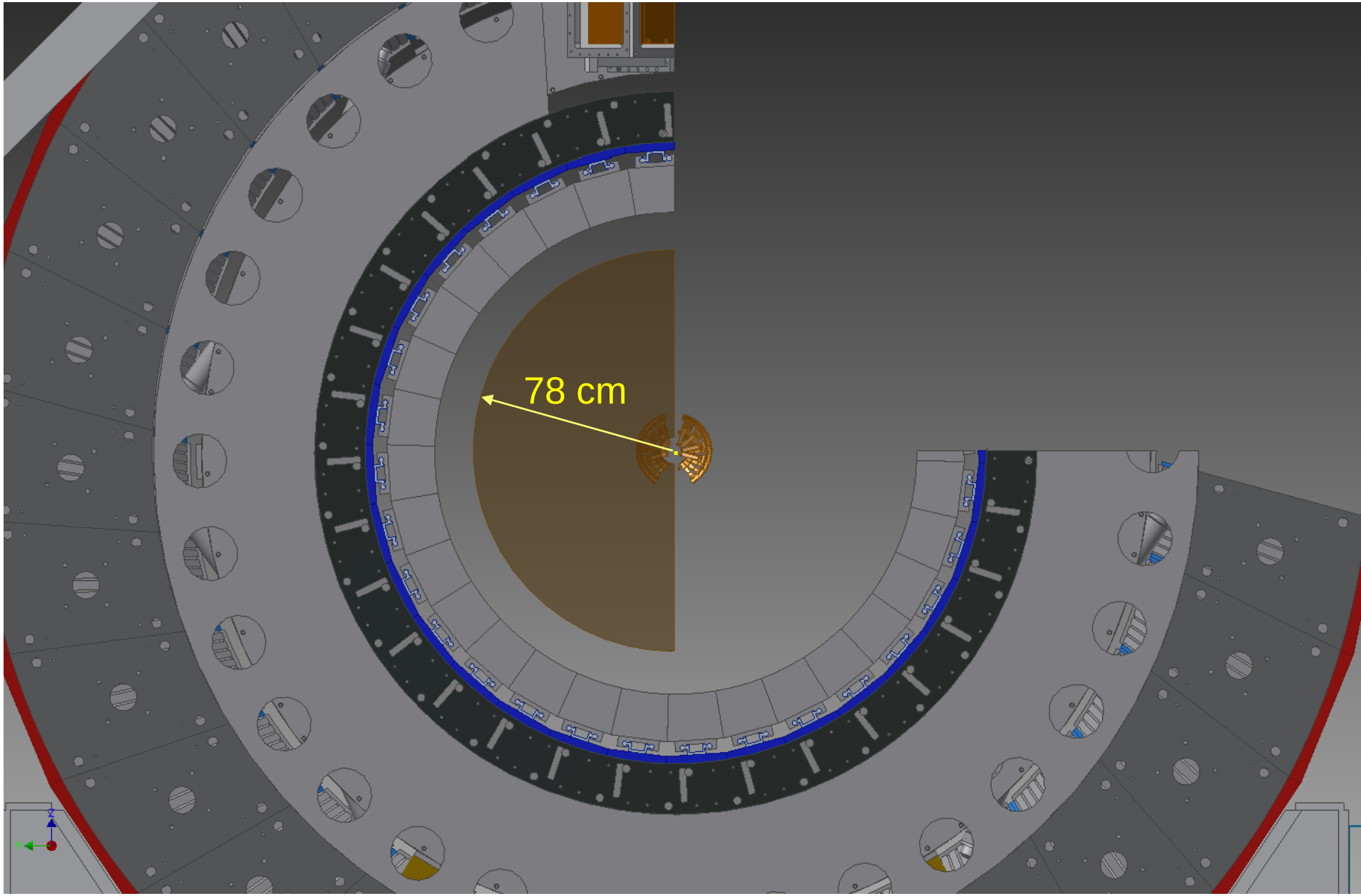

To do List

- How many ladders are needed for P0 and P1 to have full coverage in sPHENIX?

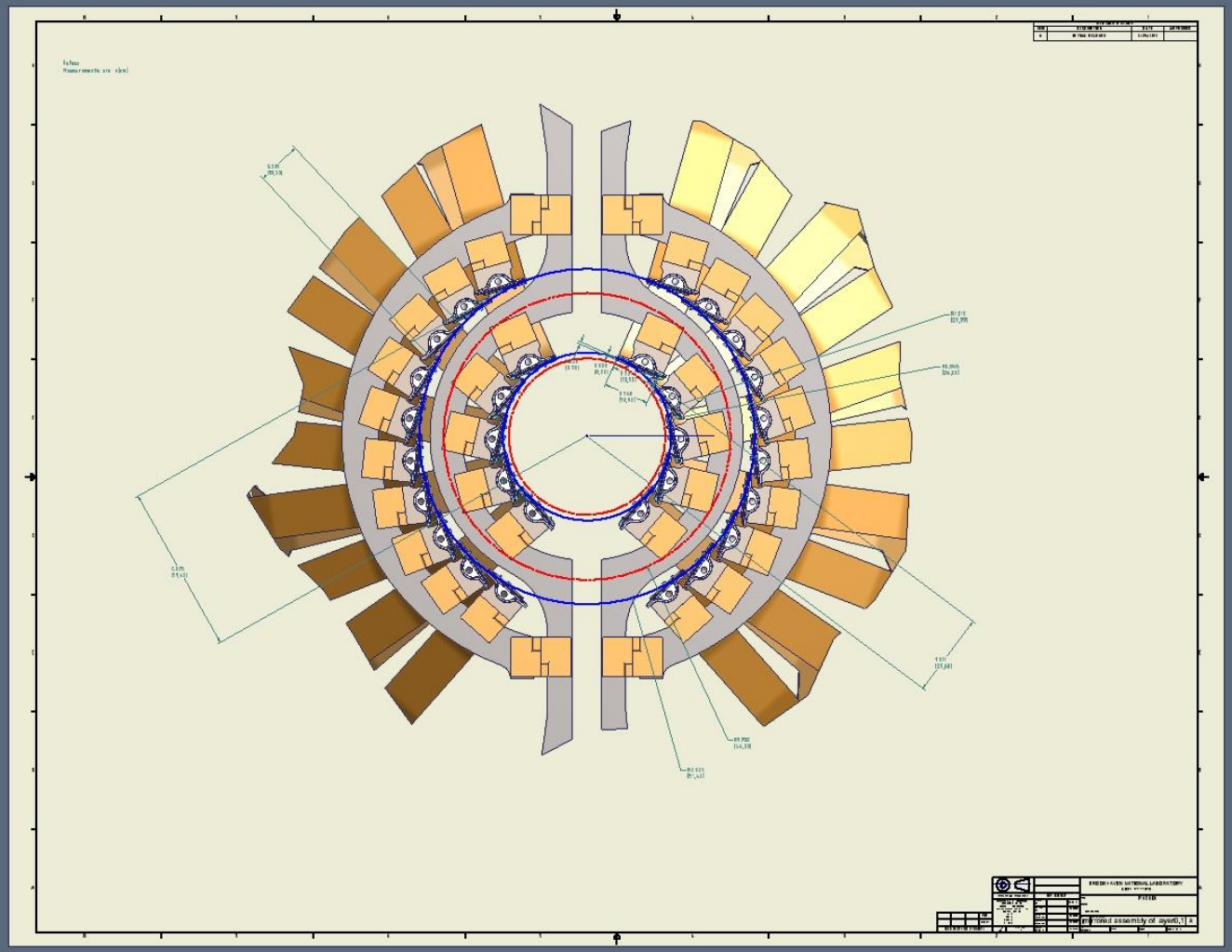

To do List

- How many ladders are needed for P0 and P1 to have full coverage in sPHENIX?

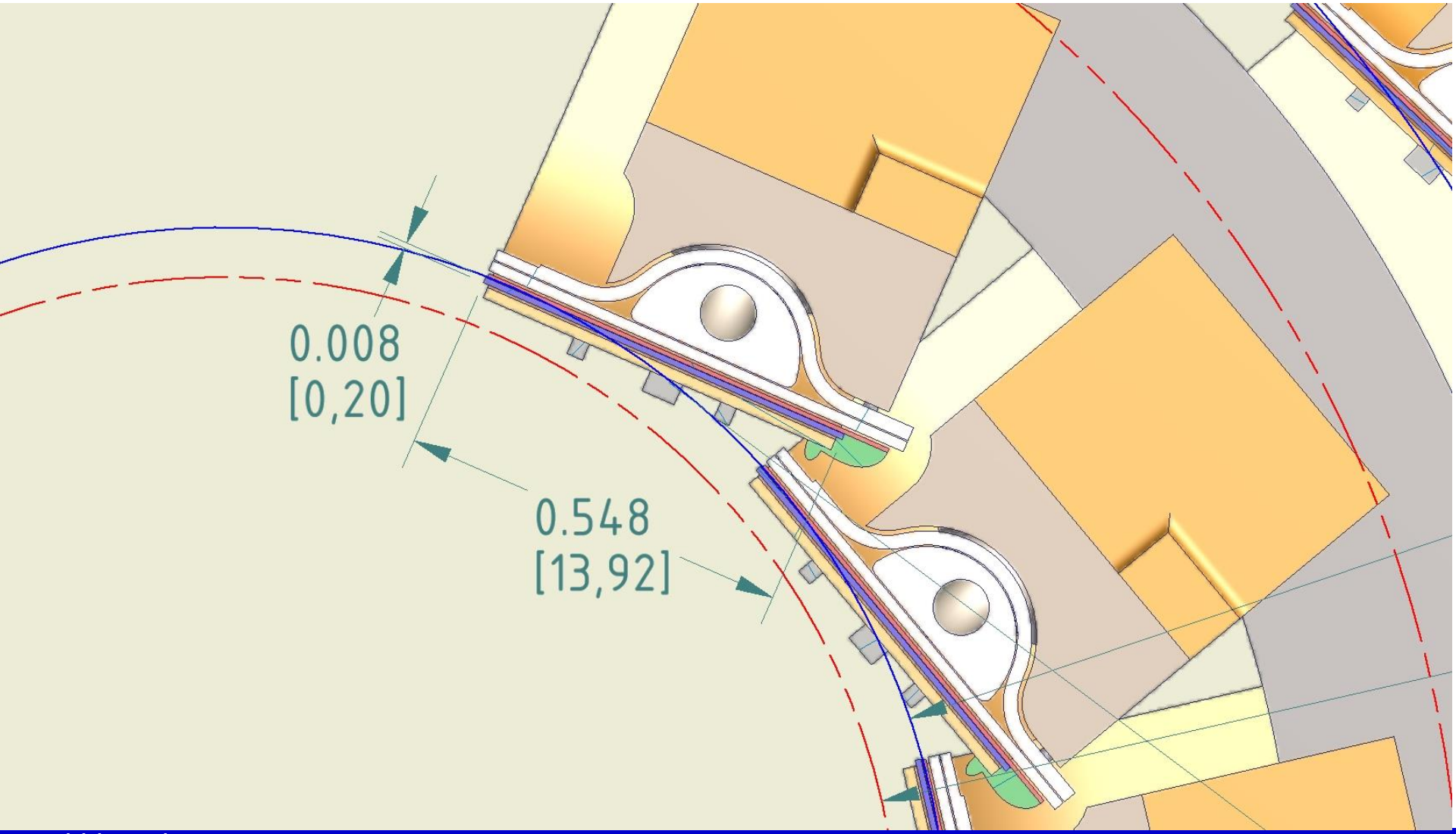

To do List

- How many ladders are needed for P0 and P1 to have full coverage in sPHENIX?

Preliminary Answer:
at: r_0 (P0) ~ 2.4 cm, we need 12 ladders of Pixels for full coverage.

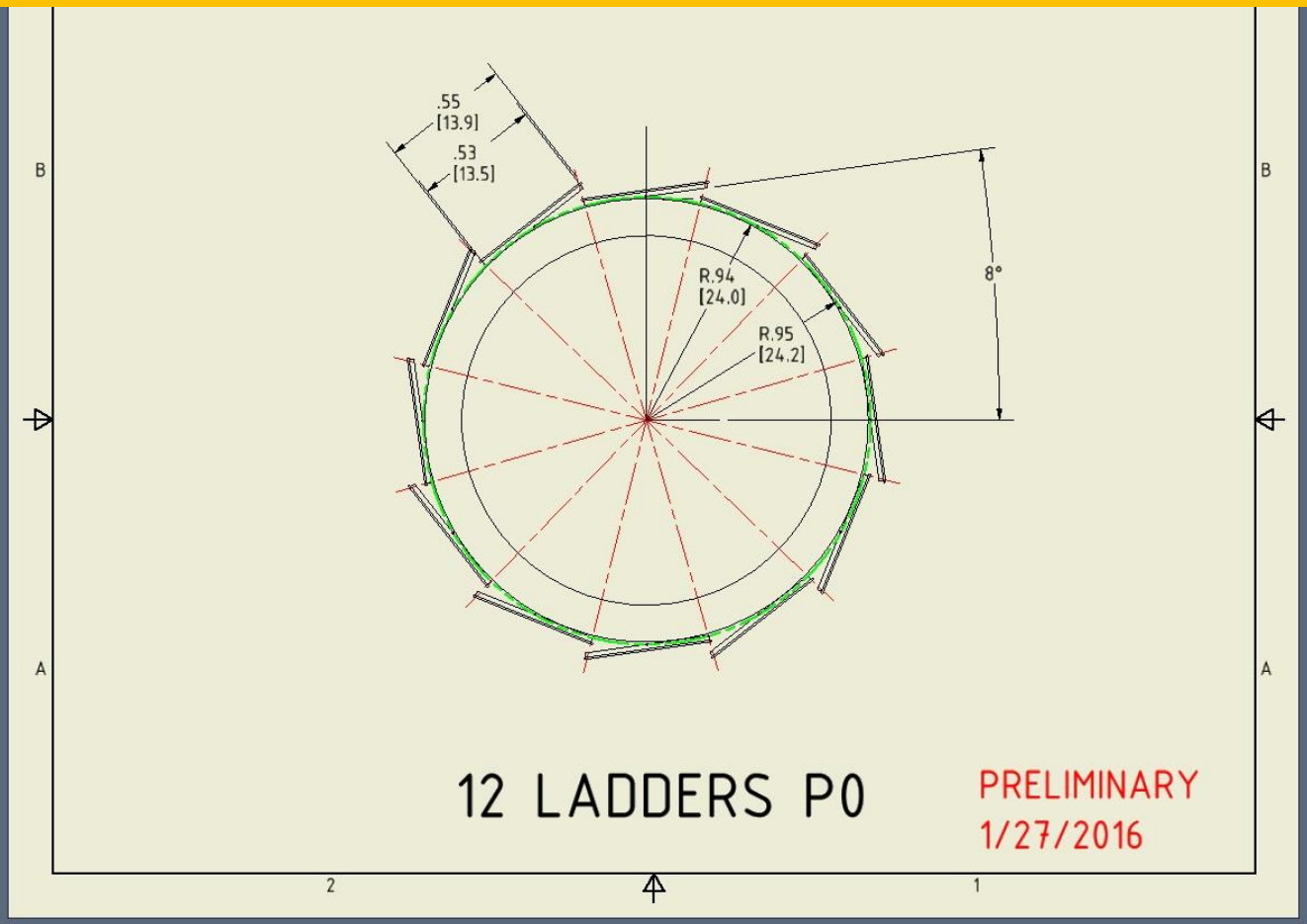

To do List

- How many ladders are needed for P0 and P1 to have full coverage in sPHENIX?

Preliminary Answer:
at: r_0 (P0) ~ 2.4 cm, we need 12 ladders of Pixels for full coverage.

With full configuration of the ladder, including CFC for cooling, P0 barrel with 12 ladders doesn't work.

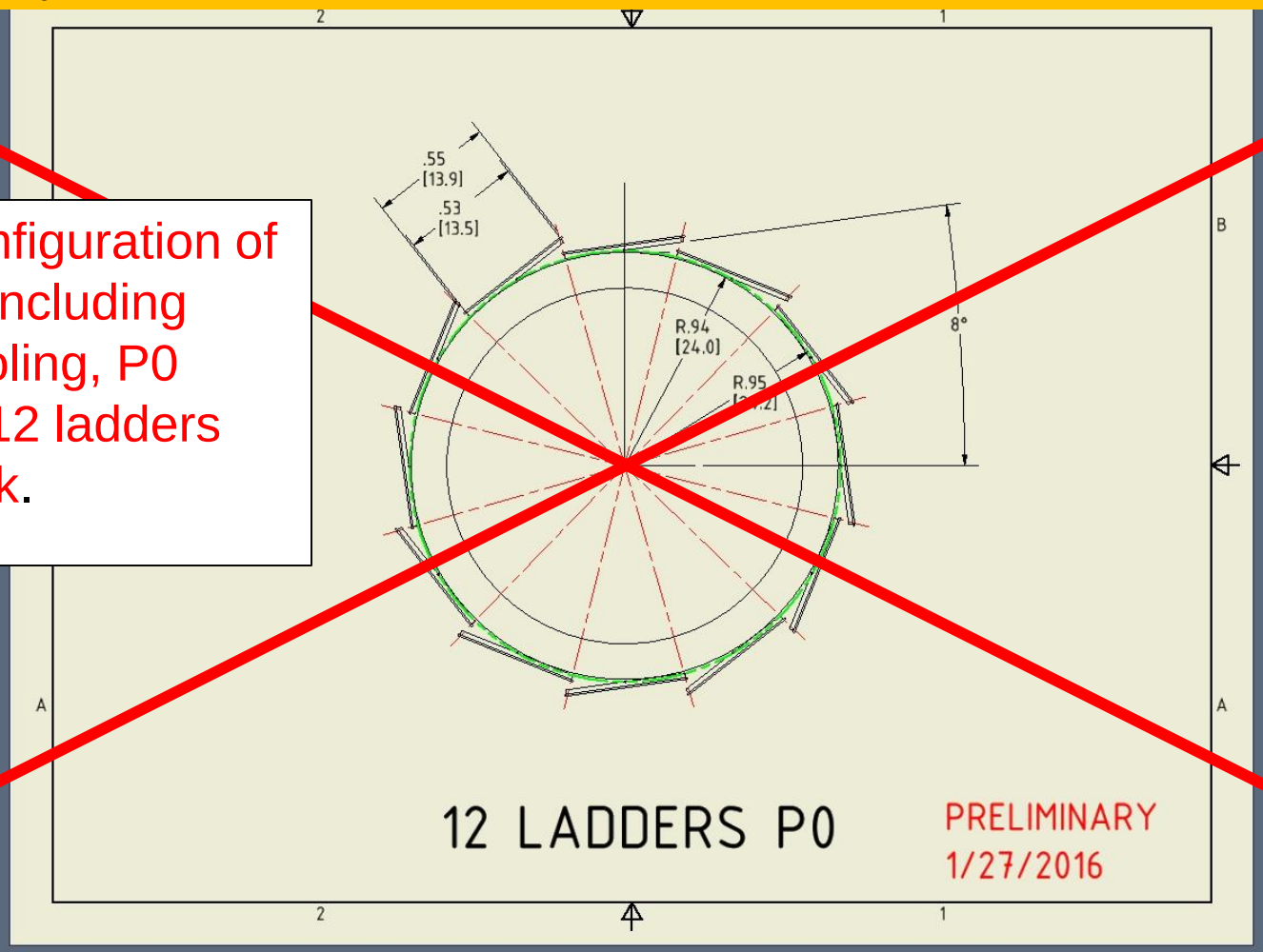

Back to the Drawing Board.

hips Pattern Productivity Work Features

Exact Drawing of Pixel ladder used in VTX-Geometry PHENIX

Drawing done by HYTECH Company

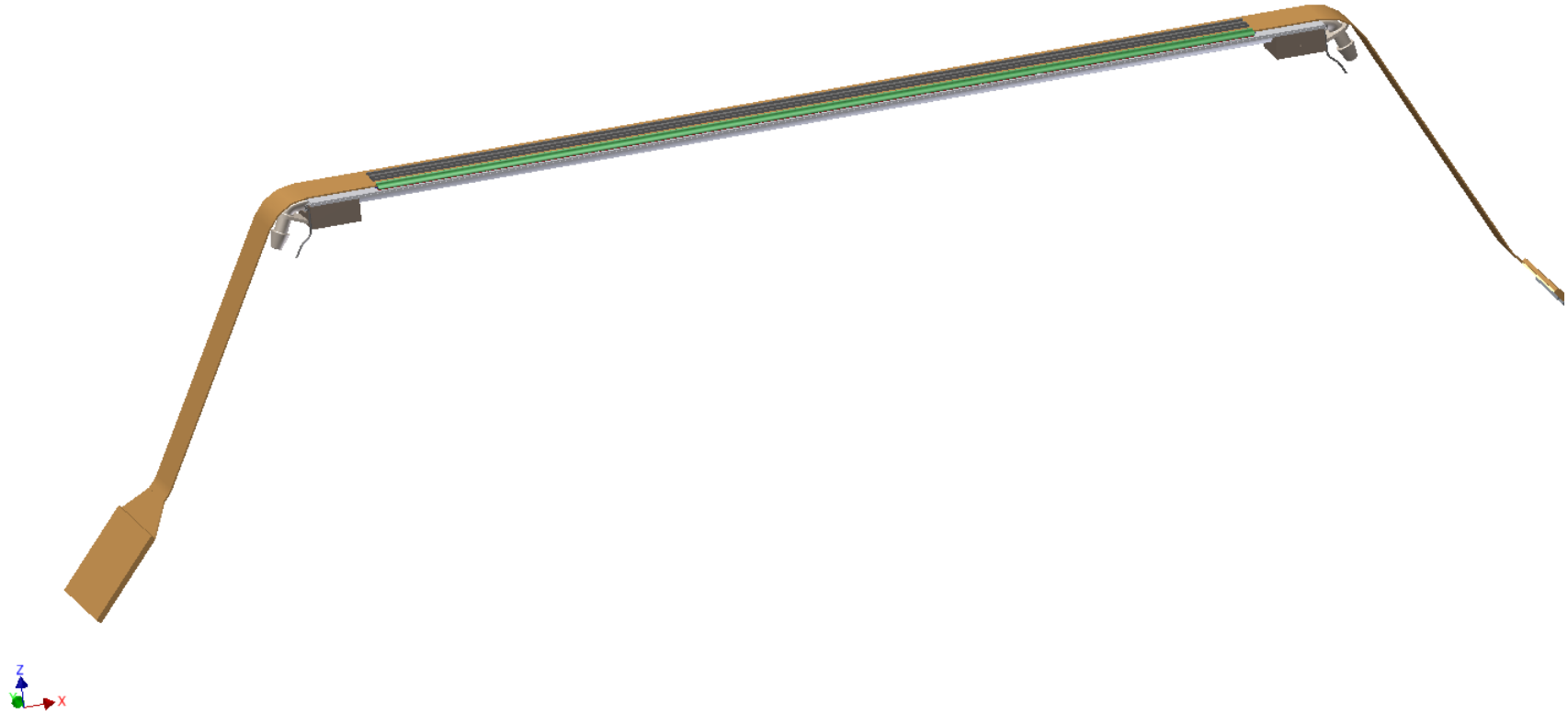

Back to the Drawing Board.

Exact Drawing of Pixel ladder used in VTX-Geometry PHENIX

Drawing done by HYTECH Company

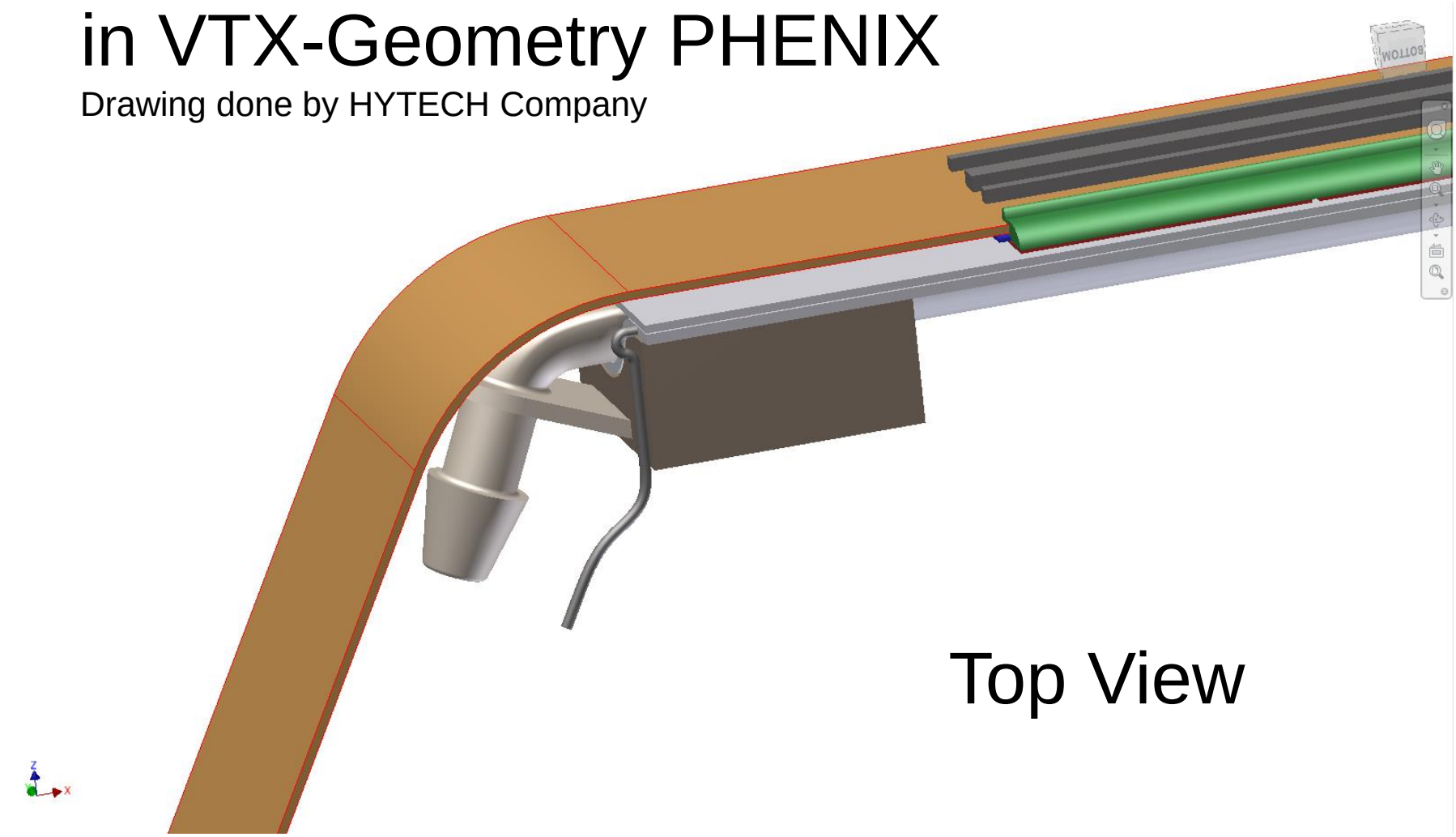

Back to the Drawing Board.

Exact Drawing of Pixel ladder used in VTX-Geometry PHENIX

Drawing done by HYTECH Company

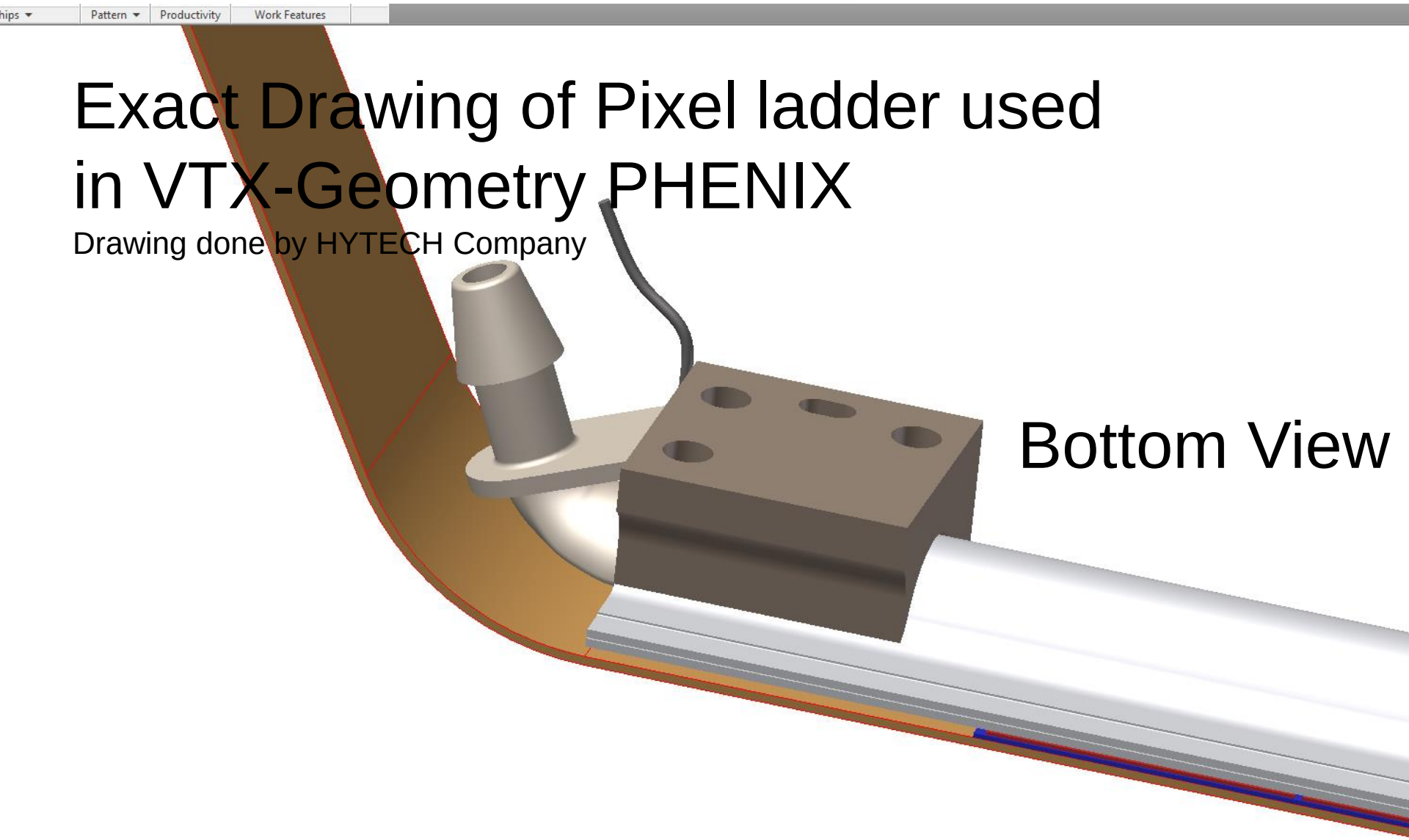

Bottom View

➢ How many ladders are needed for P0 to have full coverage in sPHENIX?

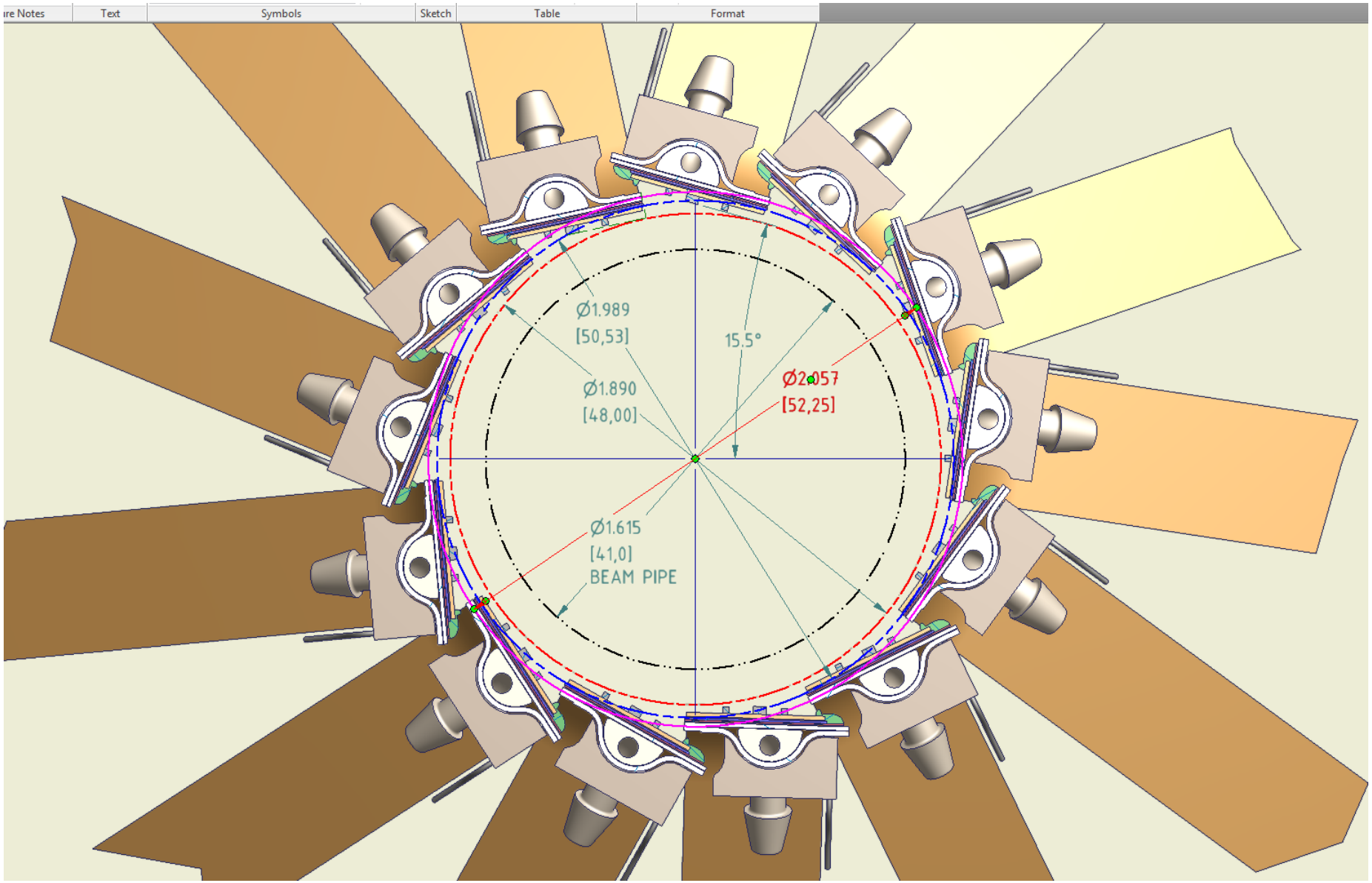

➢ How many ladders are needed for P0 to have full coverage in sPHENIX?

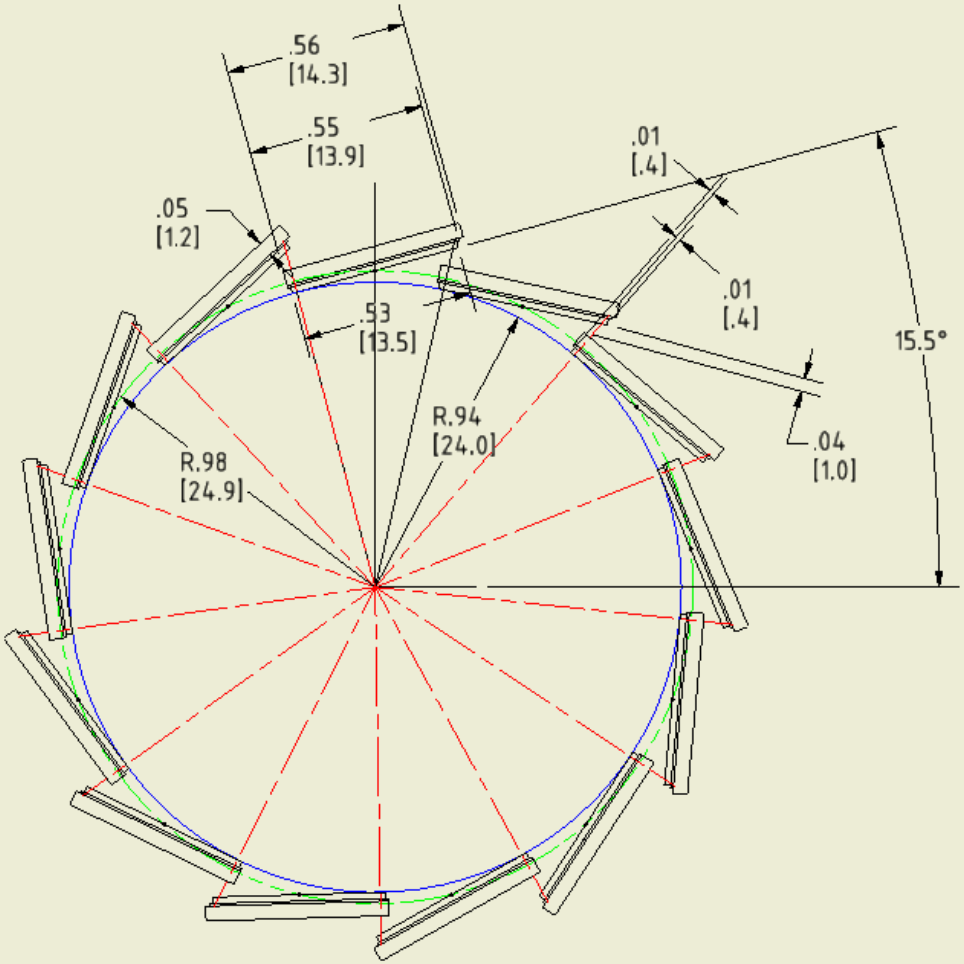

13 LADDERS P0

PRELIMINARY
2/10/2016

Full coverage in sPHENIX

- How many ladders are needed for P0?

  - Answer: 13 ladders

- At what distance r_0 (P0)?

  - Answer: r_0 (P0) = 2.49 cm

To do List

- How many ladders are needed for P1?

- At what distance r_1 (P1)?

for full coverage in sPHENIX?