Quad Module Flex Cable Redesign

Jessica Metcalfe
Argonne National Laboratory

Quad Module Flex Redesign

Redesign the quad module flex cable:

- Add a connector on the quad module flex cable to allow modules to be placed adjacent to each other

Current design:

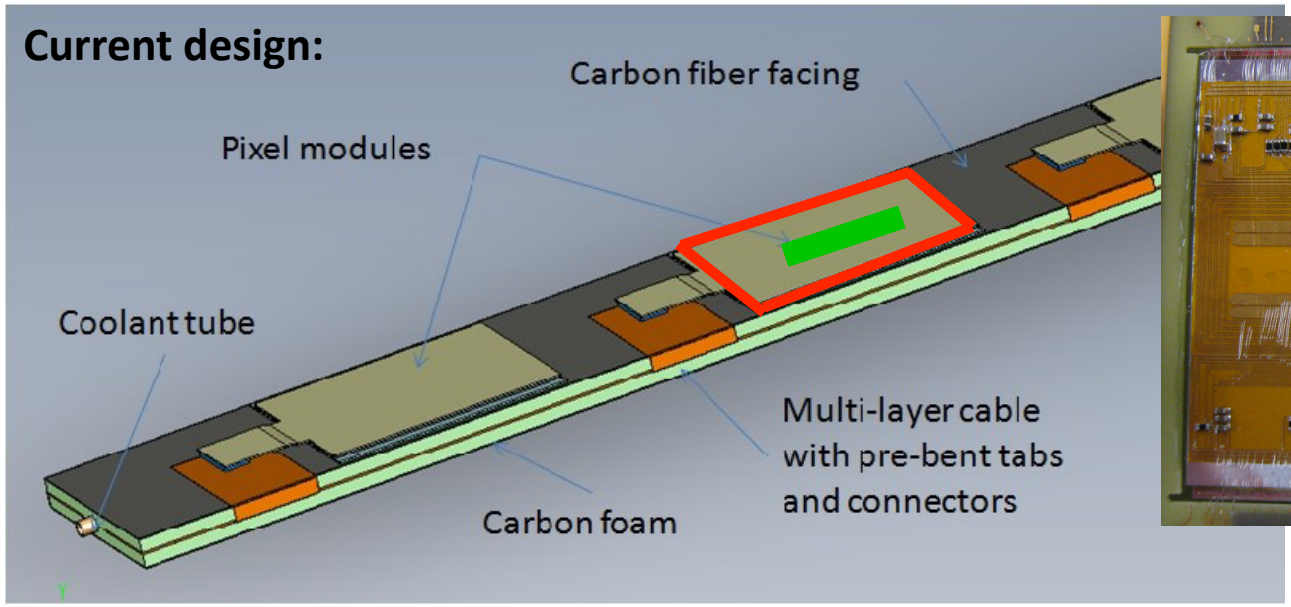

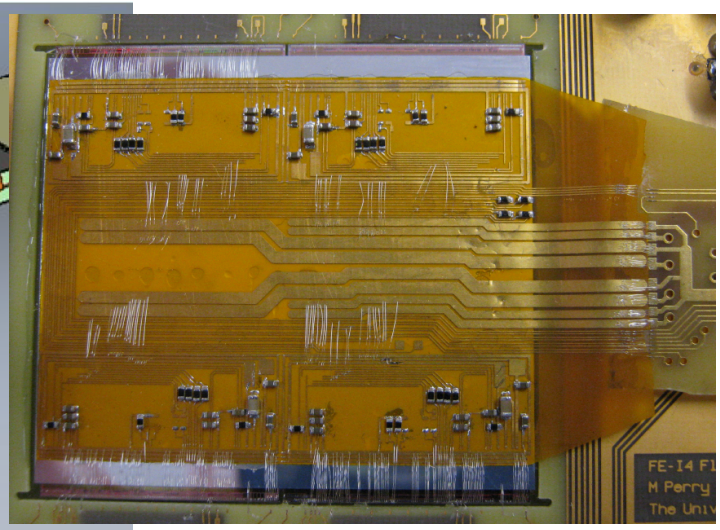

Updated concept:

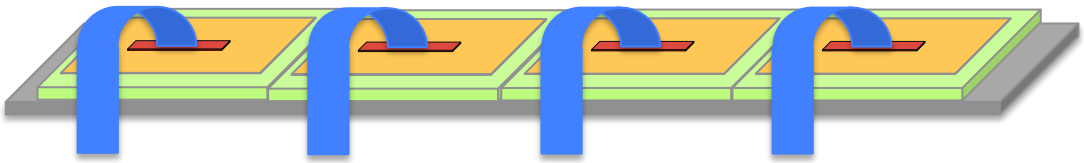

Quad Flex Cable

Cable dimensions:

- same overall dimensions, but remove the tab

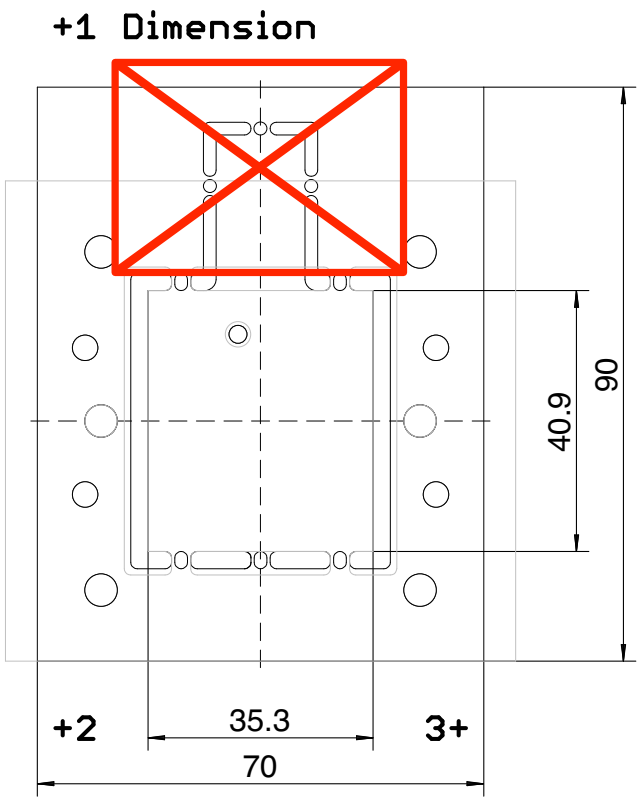

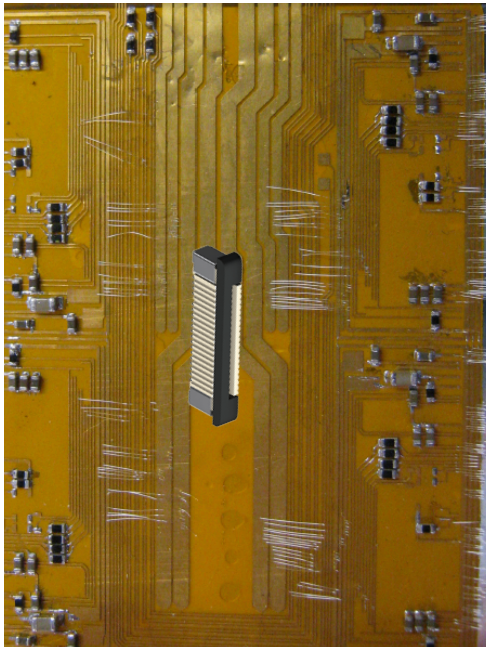

Quad Flex Cable Connector

Connector:

Samtec ZF5S

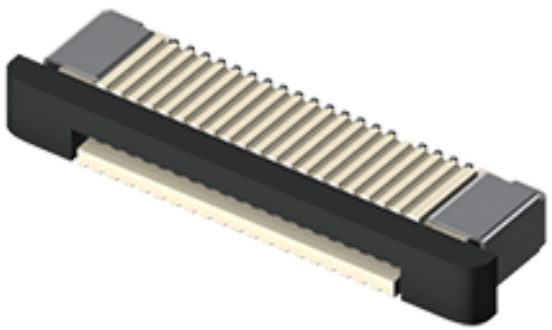

- 2.4 A/pin (one per row)
- one row up to 50 pins
- operating temp: -55 °C - +105 °C
- Insulator material: Liquid Crystal Polymer
    - Vectra E-130i (LCP)
    - melting point 330 °C
    - radiation tolerant to gammas > 5 Grad (tensile strength)
        - should still perform irradiation tests
- break down voltage: 780 V
- cost: connector < $2, cable $2-$4

https://www.samtec.com/products/zf5s

Quad Flex High Voltage

High Voltage

- Enough room on the connector for HV
- Need to leave space to avoid sparking
    - safety factor is 2x expected voltage
    - max bias voltage ~1 kV -> design for 2 kV
    - 3 kV/ mm in dry air
        - Need at least 0.66 mm
    - pin pitch is 0.5 mm -> remove at least 2 pins

⇒ HV load tests to be done at Argonne

⇒ Dielectric materials/radiation tolerance under discussion w/ Samtec

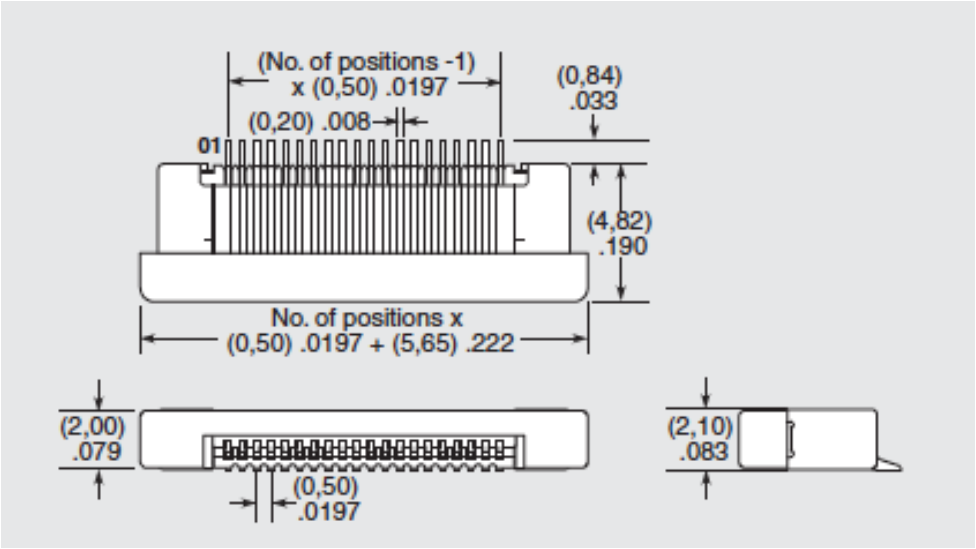

Quad Flex Pin-out

Proposed Layout:

Trigger??

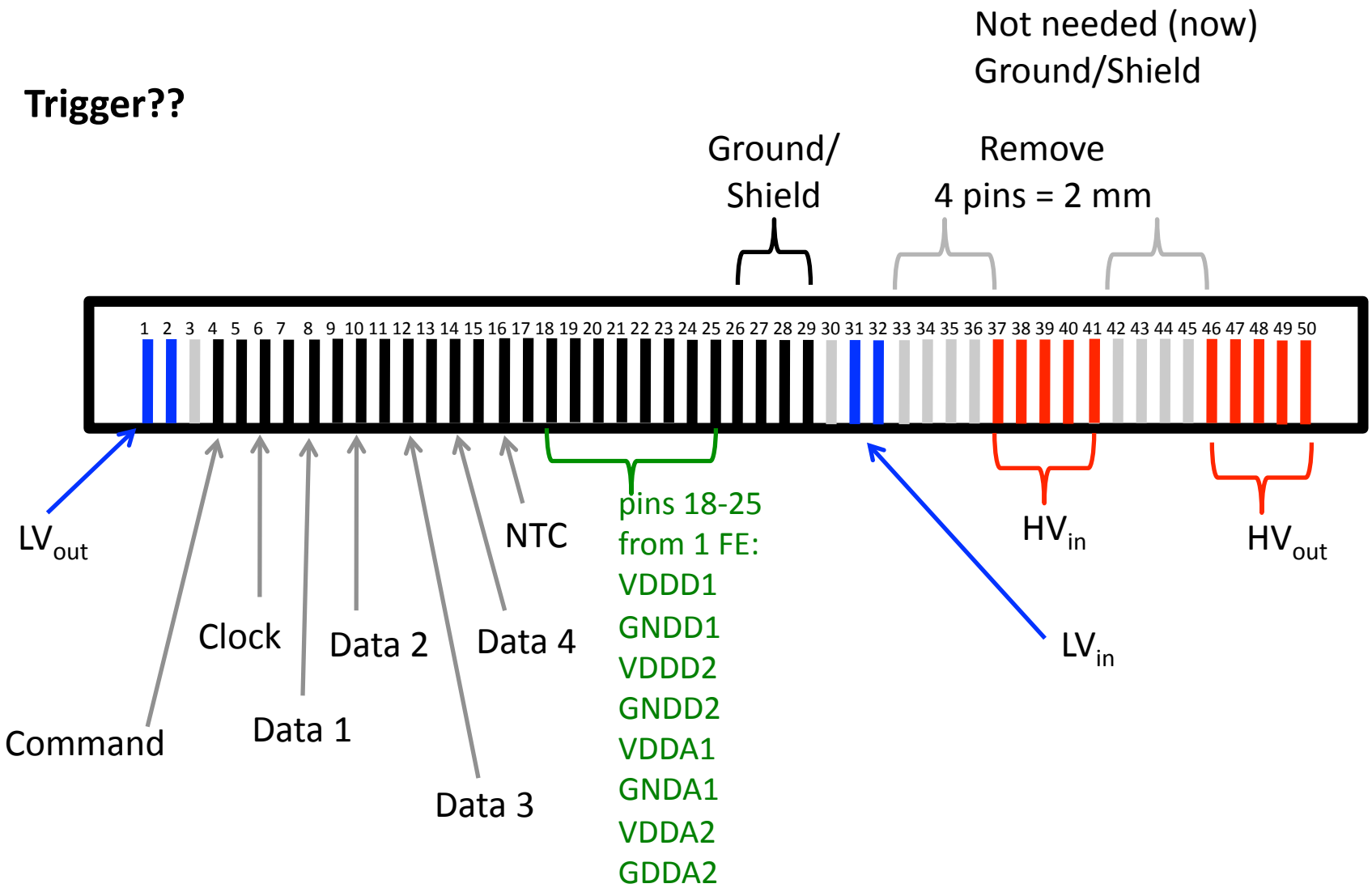

Quad Flex Pin-out

Pin-out:

Pin		Pin	
1	LV_OUT	26	Ground
2	LV_OUT	27	Ground
3	-	28	Ground
4	Command+	29	Ground
5	Command-	30	-
6	Clock+	31	LV_IN
7	Clock-	32	LV_IN
8	Data1+	33	-
9	Data1-	34	-
10	Data2+	35	-
11	Data2-	36	-
12	Data3+	37	HV_IN
13	Data3-	38	HV_IN
14	Data4+	39	HV_IN
15	Data4-	40	HV_IN
16	NTC+	41	HV_IN
17	NTC-	42	-
18	VDDD1	43	-
19	GNDD1	44	-
20	VDDD2	45	-
21	GNDD2	46	HV_OUT
22	VDDA1	47	HV_OUT
23	GNDA1	48	HV_OUT
24	VDDA2	49	HV_OUT
25	GNDA2	50	HV_OUT

Daisy Chain

Single Module:

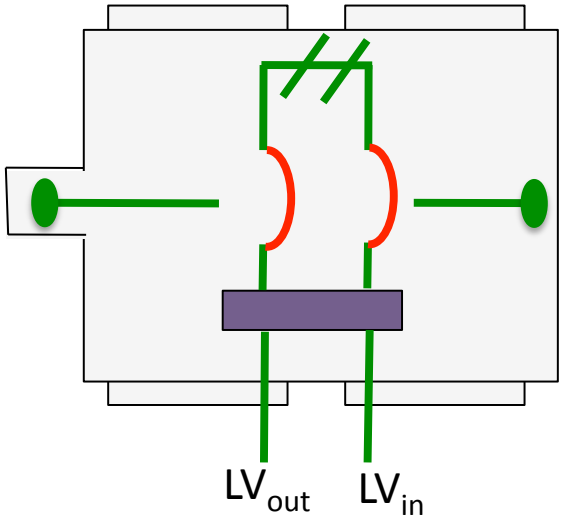

= wire bond

Daisy Chain:

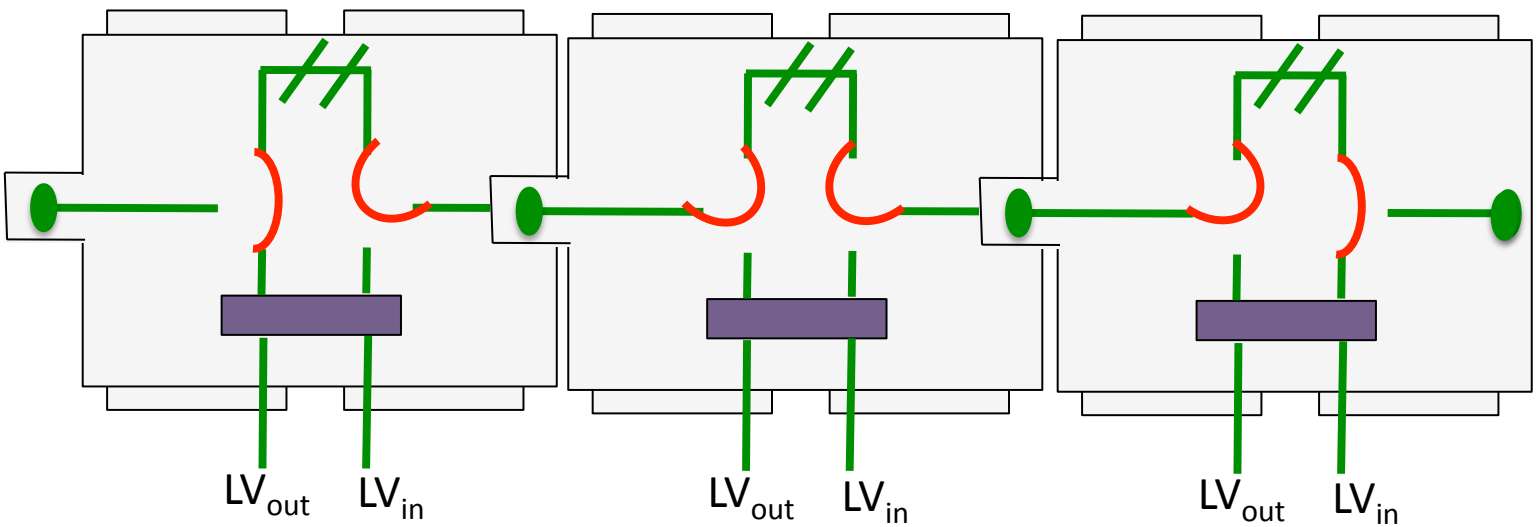

Backup

Backup

Quad Flex Pin-out
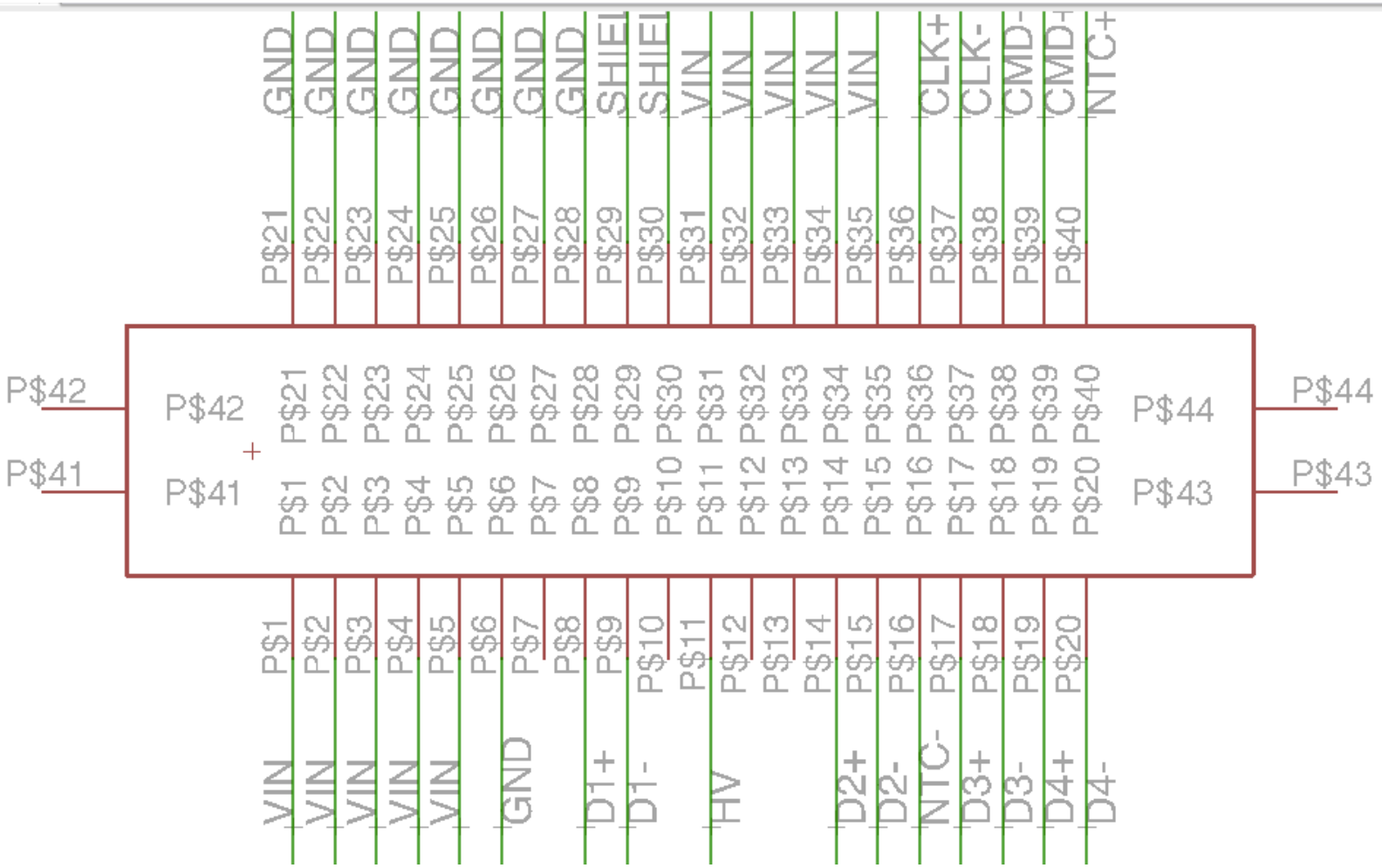
Old Layout: