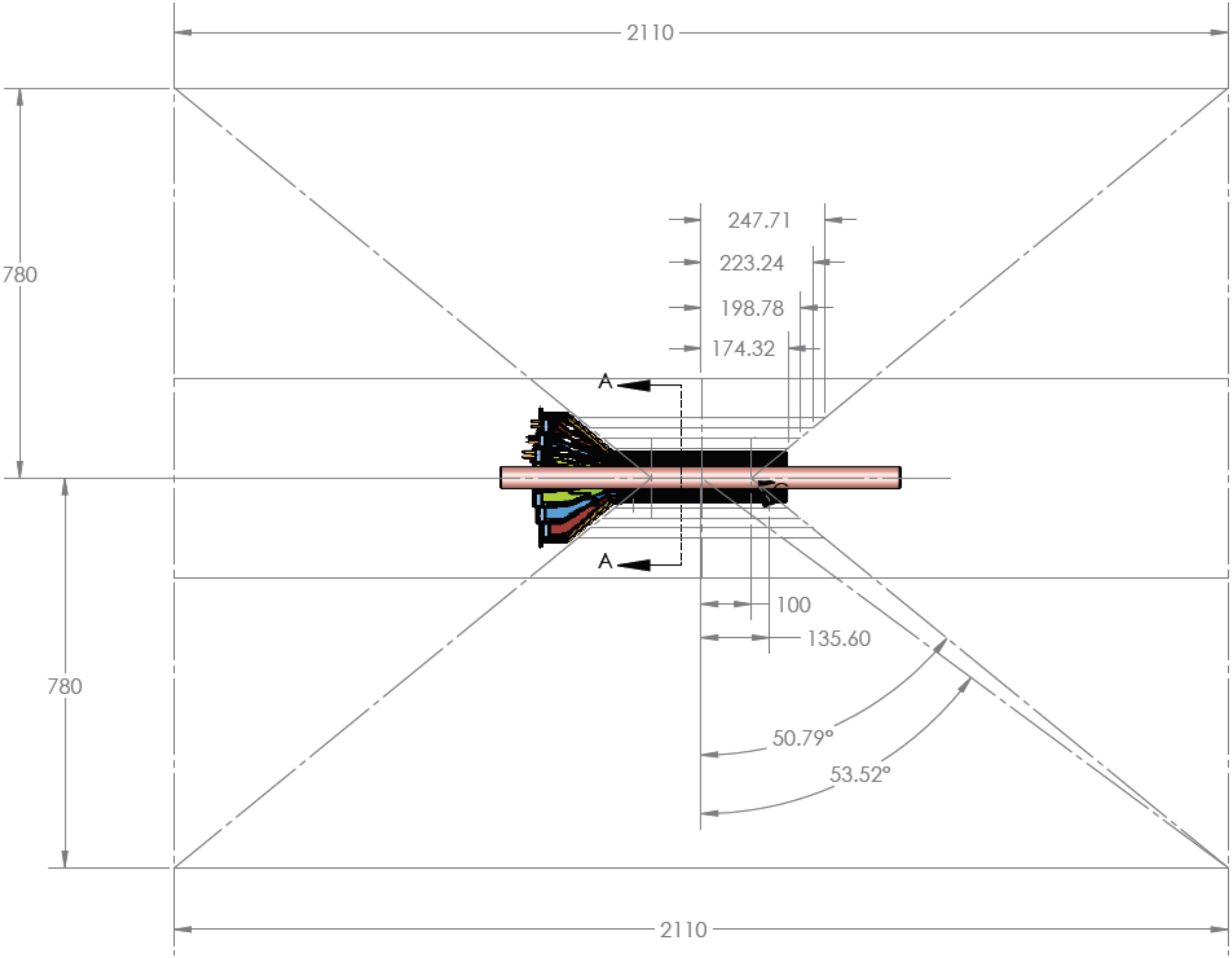
2110
780
247.71
223.24
198.78
174.32
A
A
100
135.60
780
50.79°
53.52°
2110