Stony Brook University

Updates Forward Calorimeter

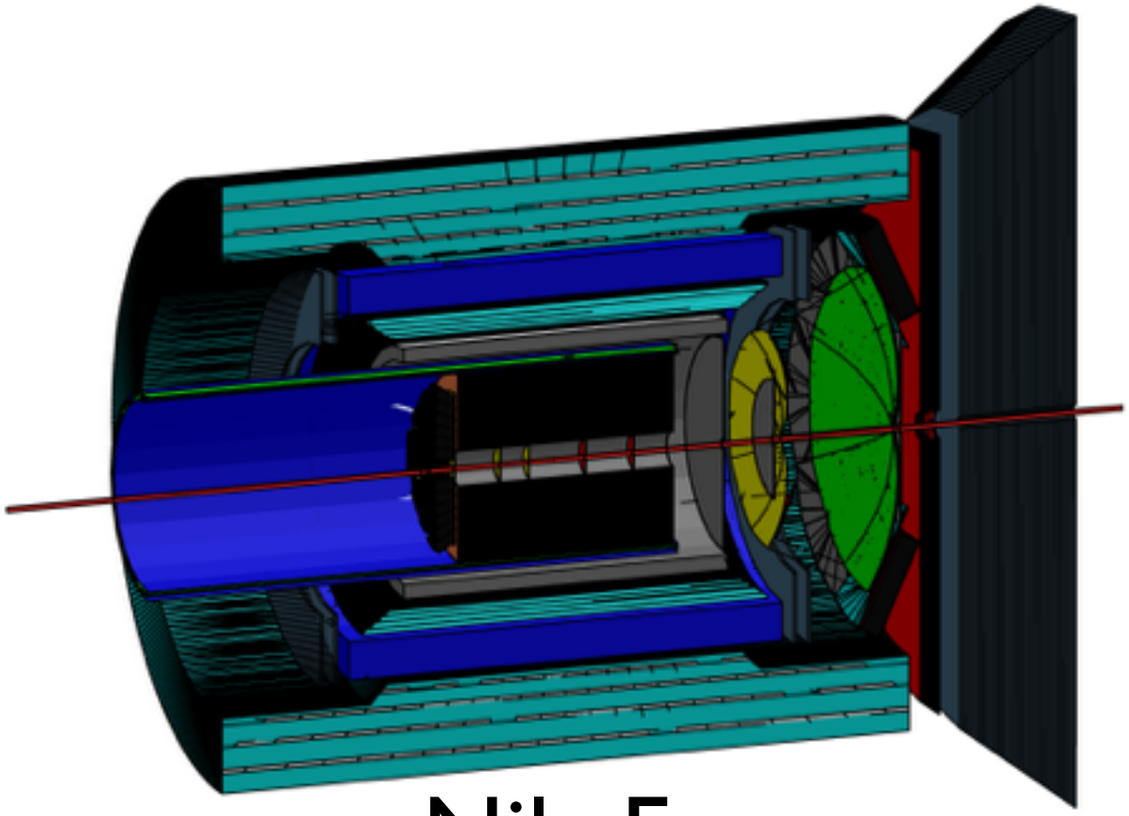

Nils Feege

Joint fsPhenix / EIC Detector Simulation Meeting

August 11 2015

PHG4ForwardHcal

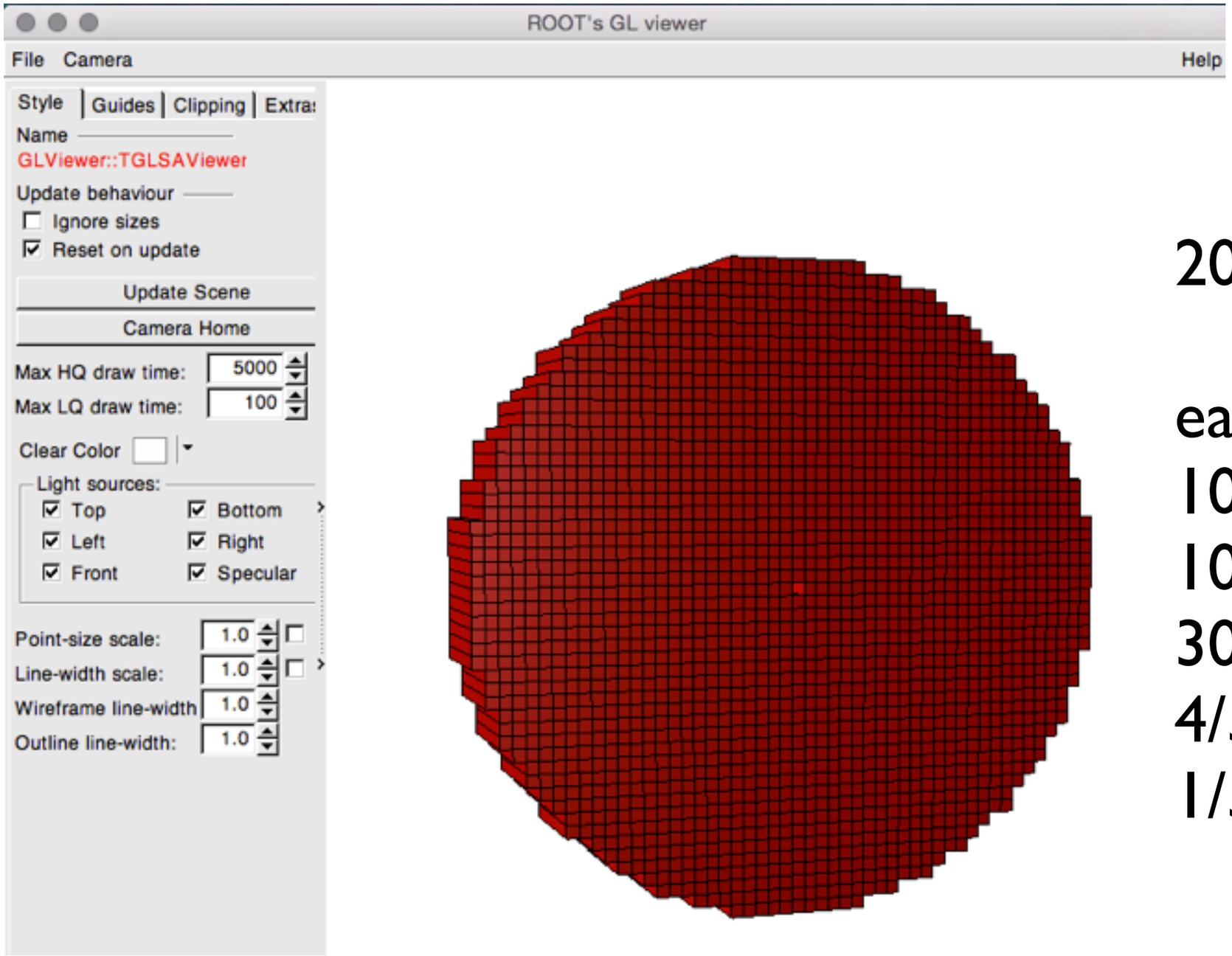

2046 Tower

each tower:
10x10 cm^2 sampling
100 cm long
30 layers
4/5 iron
1/5 scintillator

https://github.com/EIC-Detector/analysis-calorimeter/mapping/root_tgeo

PHG4CrystalCalorimeter

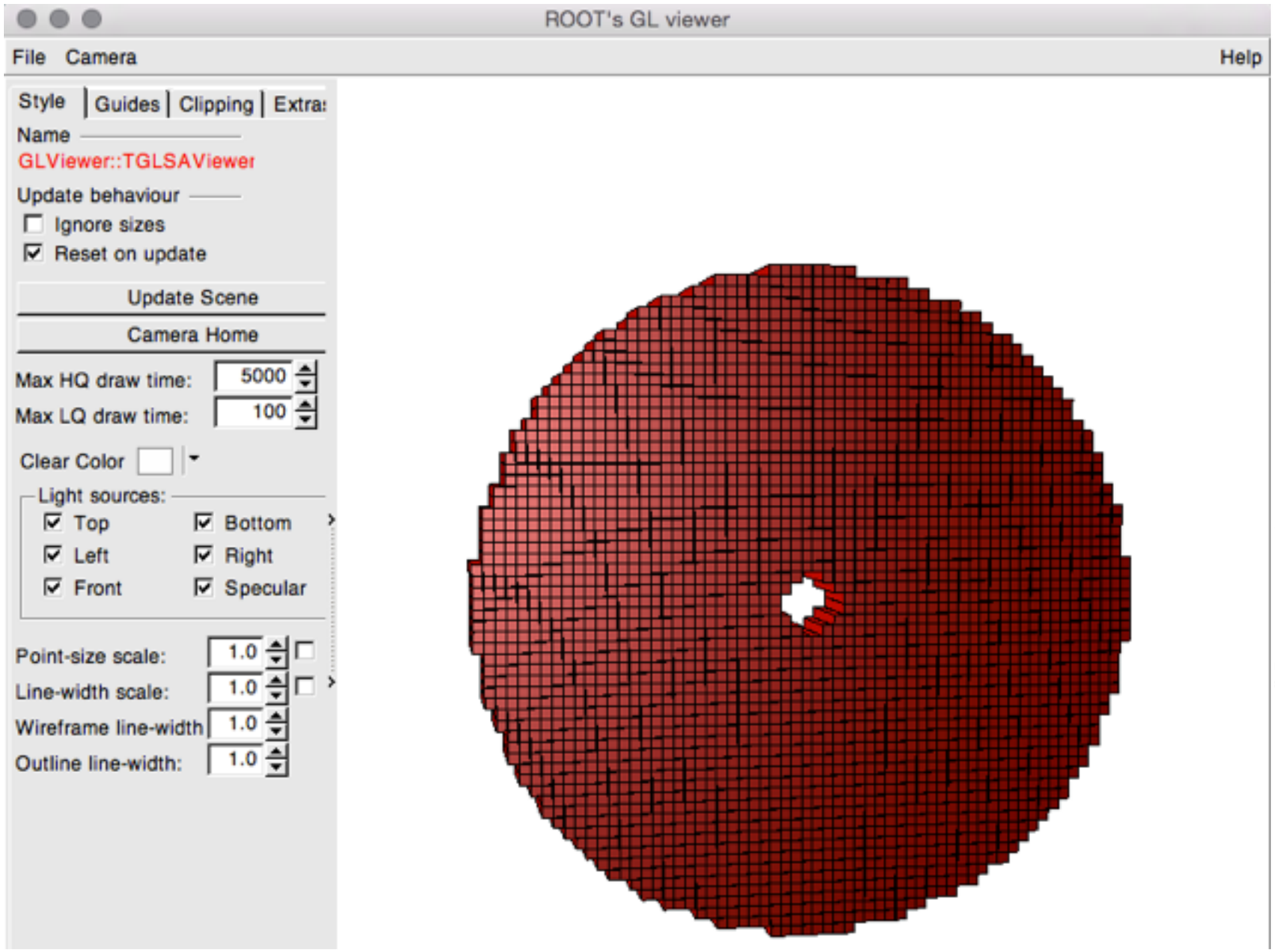

2962 Tower

each tower:
2x2 cm^2 PbWO4 crystal
18 cm long
air gap
Carbon fiber frame
non-projective

(Projective version is a separate class)

https://github.com/EIC-Detector/analysis-calorimeter/mapping/root_tgeo

PHG4ForwardEcal

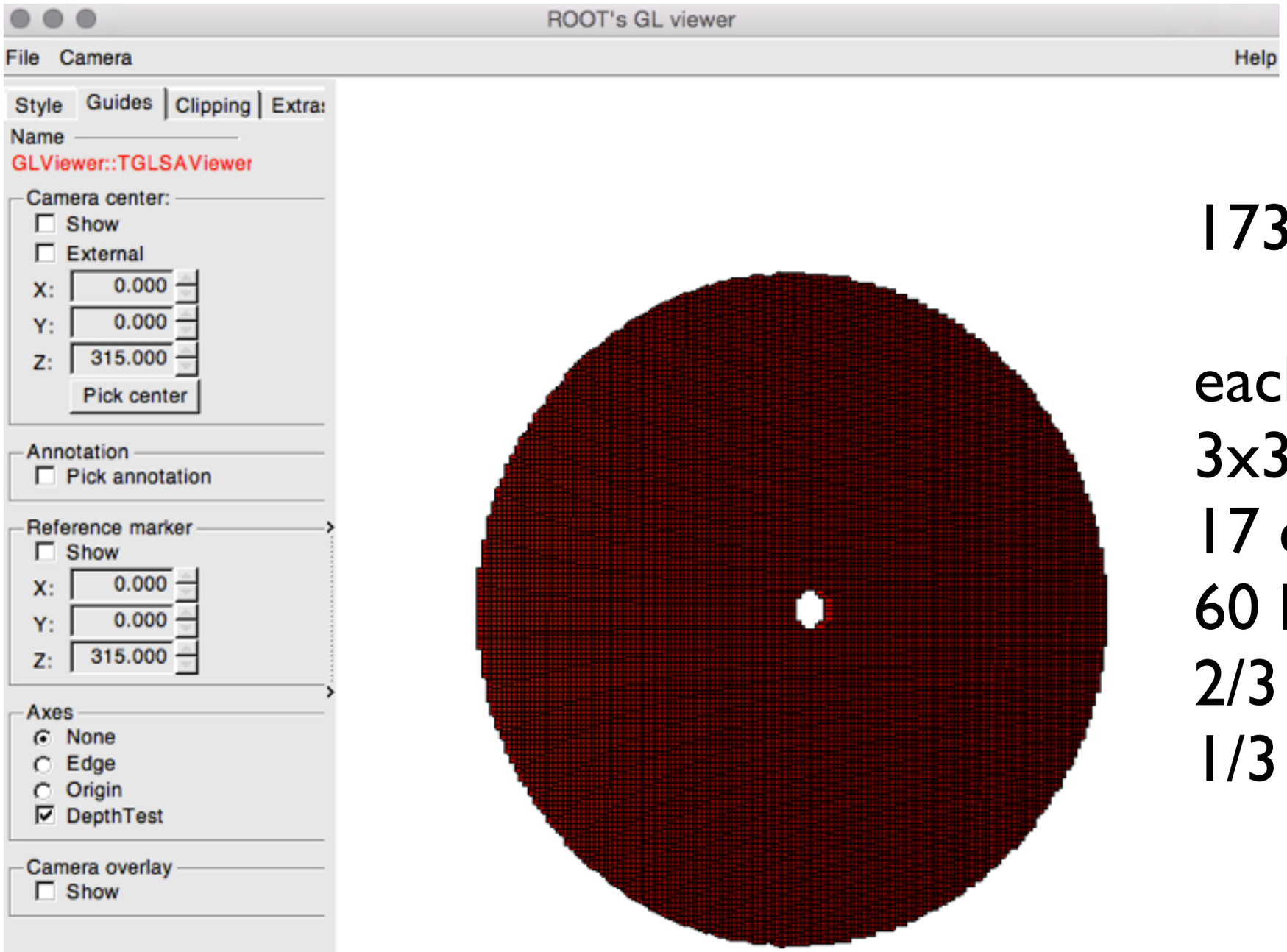

17350 Tower

each tower:
3x3 cm^2 sampling
17 cm long
60 layers
2/3 lead
1/3 scintillator

https://github.com/EIC-Detector/analysis-calorimeter/mapping/root_tgeo

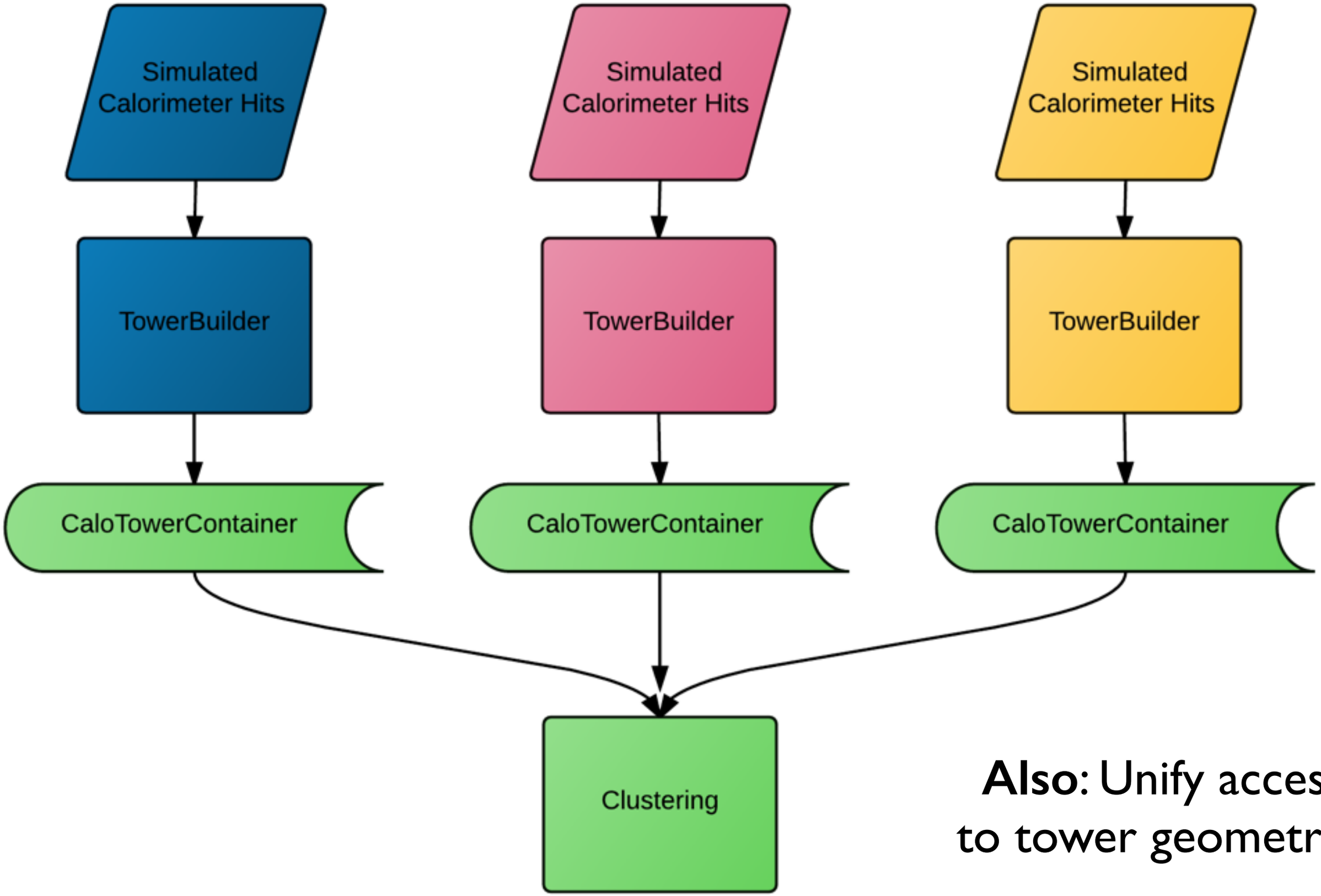

Also: Unify access to tower geometry

Macros to run full fsPHENIX / EIC detector in Fun4All

EIC-Detector / coresoftware-eic

Unwatch 3 | Star 0 | Fo

Branch: master | coresoftware-eic / macros / +

Automatically generate path to mapping file for ForwardHcal

nfeege authored 2 days ago — latest commit 408d1b5996

..		
DisplayOn.C	Import over previous and sPHENIX macros	3 months ago
Fun4All_G4_ePHENIX.C	Use the new sPHENIX reference design	3 months ago
Fun4All_G4_ePHENIX_TOF.C	Import over previous and sPHENIX macros	3 months ago
Fun4All_G4_fsPHENIX.C	Disable pythia and jet part of reco in fsPHENIX, until such function …	3 months ago
Fun4All_G4_sPHENIX.C	Import over previous and sPHENIX macros	3 months ago
G4Setup_ePHENIX.C	adapt macros to use new ForwardHcal implementation	11 days ago
G4Setup_fsPHENIX.C	adapt macros to use new ForwardHcal implementation	11 days ago
G4Setup_sPHENIX.C	Import over previous and sPHENIX macros	3 months ago

(Update in progress… Let me know if something seems wrong)

Macros to run single calorimeter in Fun4All

EIC-Detector / **analysis-calorimeter**

Unwatch 4 | Star 0 | Fo

Branch: **master** | **analysis-calorimeter** / **g4macros** / +

Revert "Switch tower code from RawTower-based to new CaloTower-based" ...

nfeege authored a day ago — latest commit 773123bbe1

..

Fun4All_G4_FHCAL_ZeroField.C	Revert "Switch tower code from RawTower-based to new CaloTower-based"	a day ago
Fun4All_G4_eEMCAL_ZeroField.C	Revert "Switch tower code from RawTower-based to new CaloTower-based"	a day ago
G4Detector_Cone_eEMCAL.C	rename eECAL to eEMCAL	3 months ago
G4Setup_FHCAL.C	Revert "Switch tower code from RawTower-based to new CaloTower-based"	a day ago
G4Setup_eEMCAL.C	Updates Fun4All_G4_eEMCAL_ZeroField.C to utilize the most recent vers…	12 days ago
G4_FHcal_Cone.C	add FHcal_cone setup macro for comparison studies	11 days ago
eic.mac	add copy of visualization macro	11 days ago

(Update in progress…)

Calorimeter evaluation modules

EIC-Detector / **analysis-calorimeter**

Unwatch 4 | Star 0 | For

Branch: **master** | **analysis-calorimeter** / **g4analysis-calorimeter** / +

Revert "Switch tower code from RawTower-based to new CaloTower-based" ...

nfeege authored a day ago — latest commit 773123bbe1

..		
G4AnaCaloLinkDef.h	Fix Makefile	3 months ago
G4CaloShowerAnalysis.cc	Adds new analysis features to G4CaloShowerAnalysis	12 days ago
G4CaloShowerAnalysis.h	Adds new analysis features to G4CaloShowerAnalysis	12 days ago
G4CaloTowerAnalysis.cc	Revert "Switch tower code from RawTower-based to new CaloTower-based"	a day ago
G4CaloTowerAnalysis.h	Revert "Switch tower code from RawTower-based to new CaloTower-based"	a day ago
Makefile.am	Update G4CaloTowerAnalysis	3 months ago
autogen.sh	Initial commit	3 months ago
configure.in	Fix Makefile	3 months ago

Idea: Have modules with specific purpose rather than "One Evaluator Who Rules Them All"

Next steps calorimeter:

- Energy leakage (Joshua LaBounty)
- Implement Forward ECAL (N.F.)
- Mapping / geometry class (N.F.)

- Clustering
- Track matching
- Jet reconstruction

- Modules to evaluate calorimeter performance
- Electron ID with calorimeters