γ, π^0, η Simulation in f/sPHENIX Detector

Vasily Jorjadze

SBU

October 17, 2016

Single γ in Central Detector, P=15 GeV/c

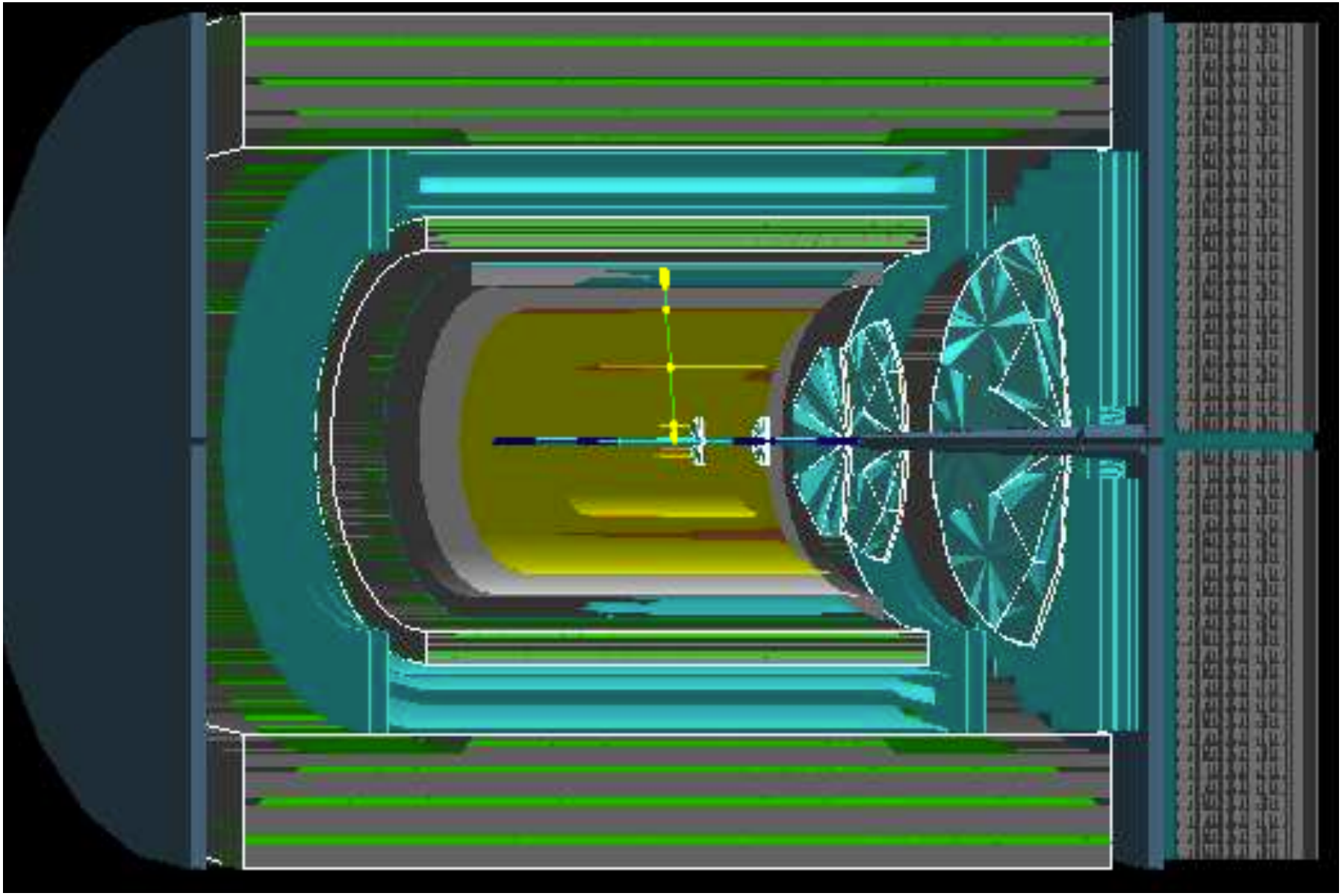

Single γ in Central Detector, P=15 GeV/c

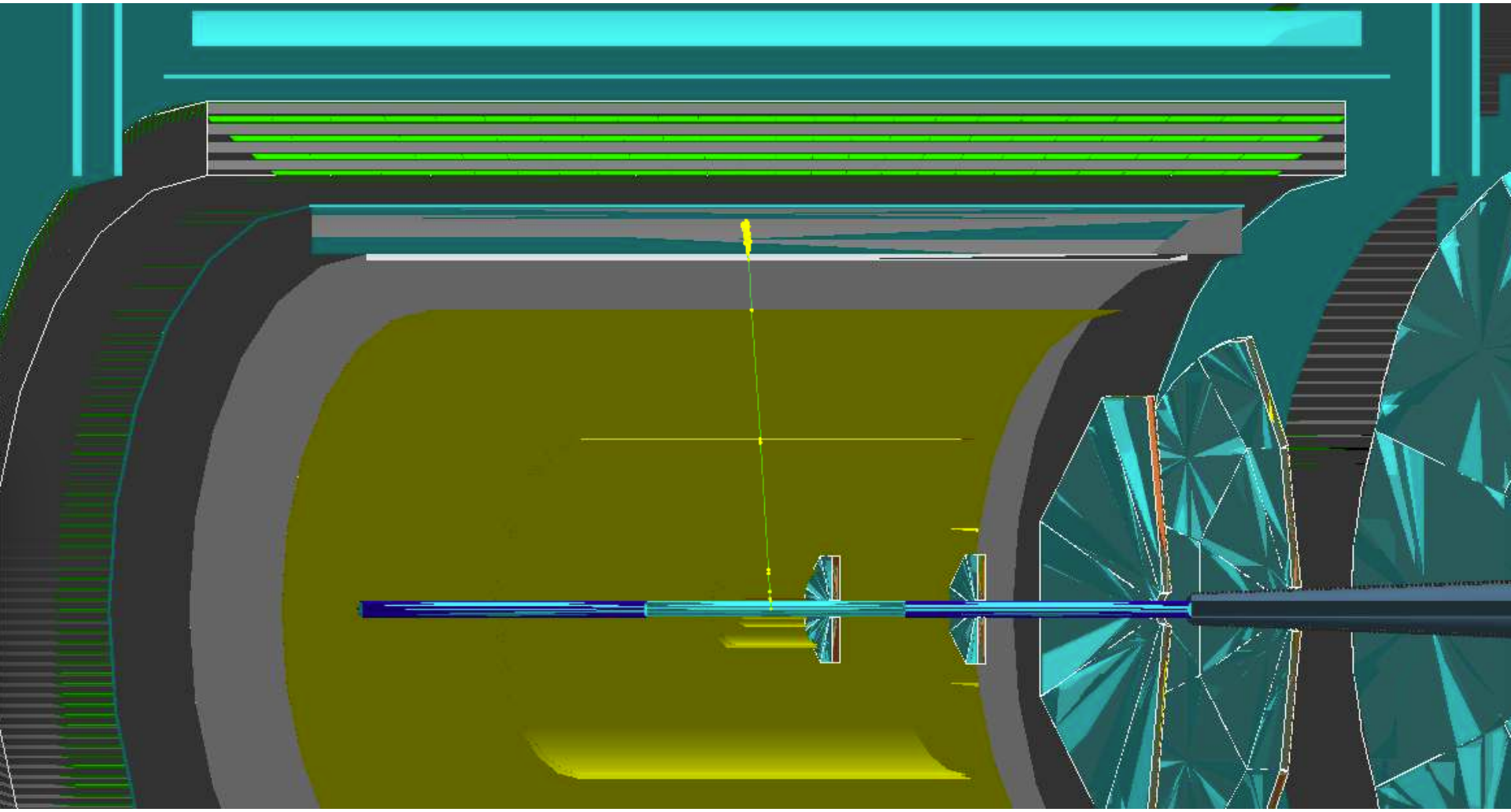

Single γ in Central Detector, P=15 GeV/c

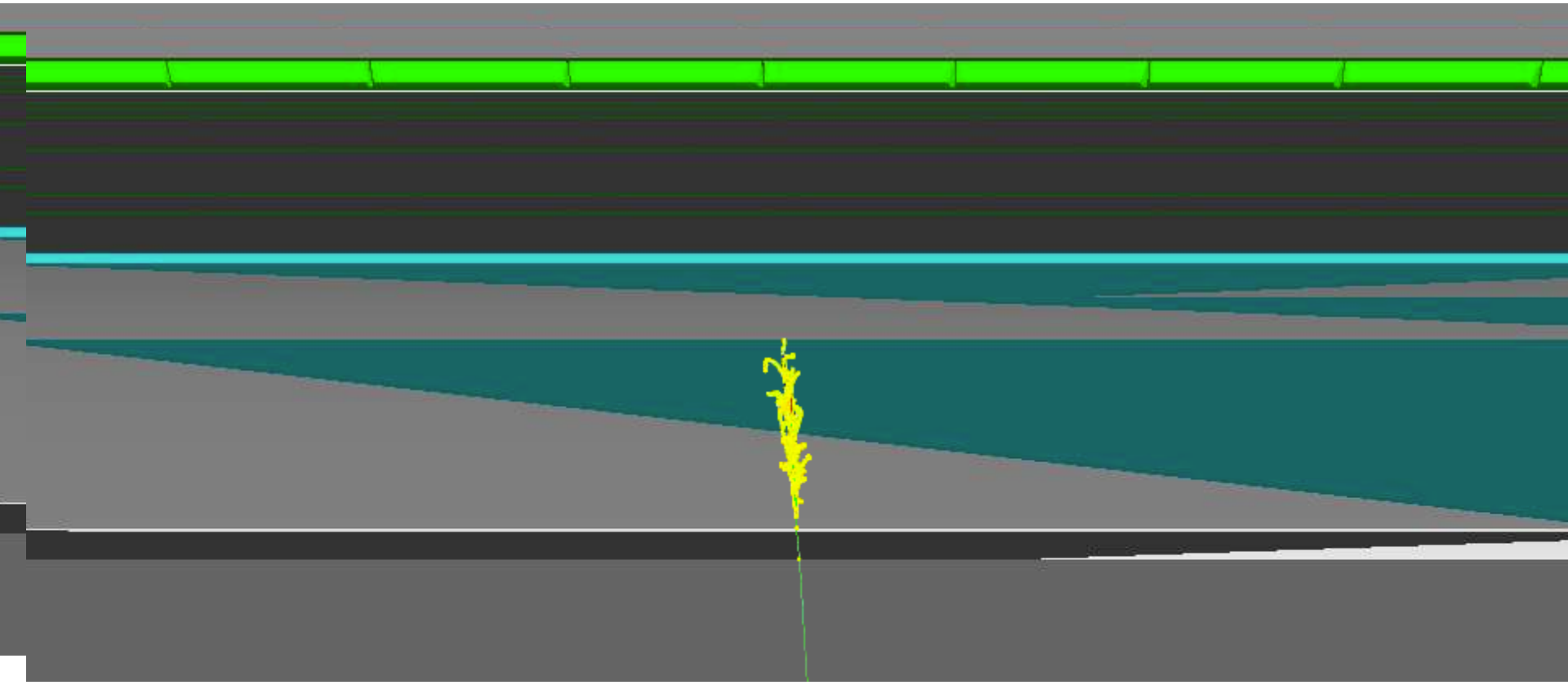

Single γ in Central Detector, P=5 GeV/c

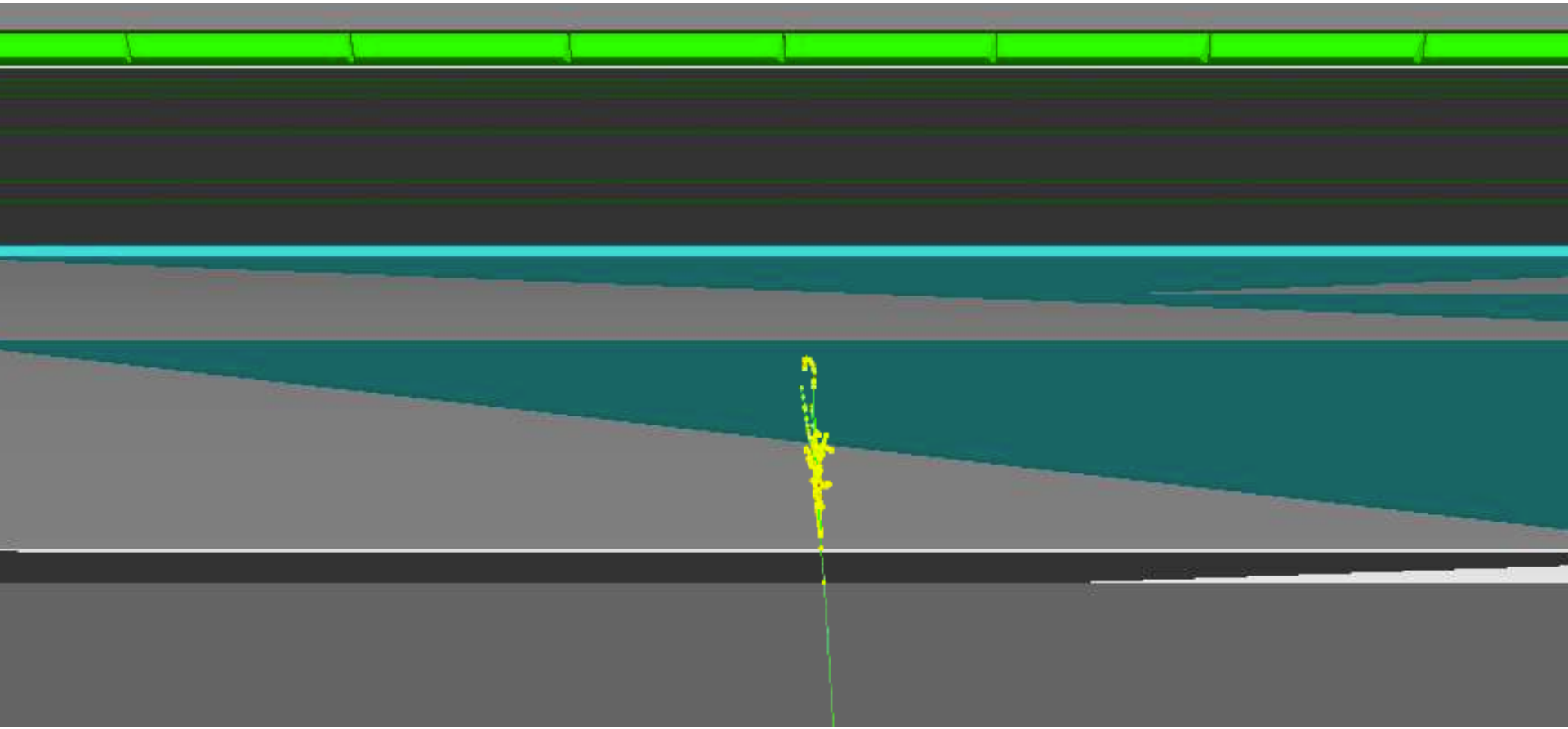

Single γ in Central Detector, P=25 GeV/c

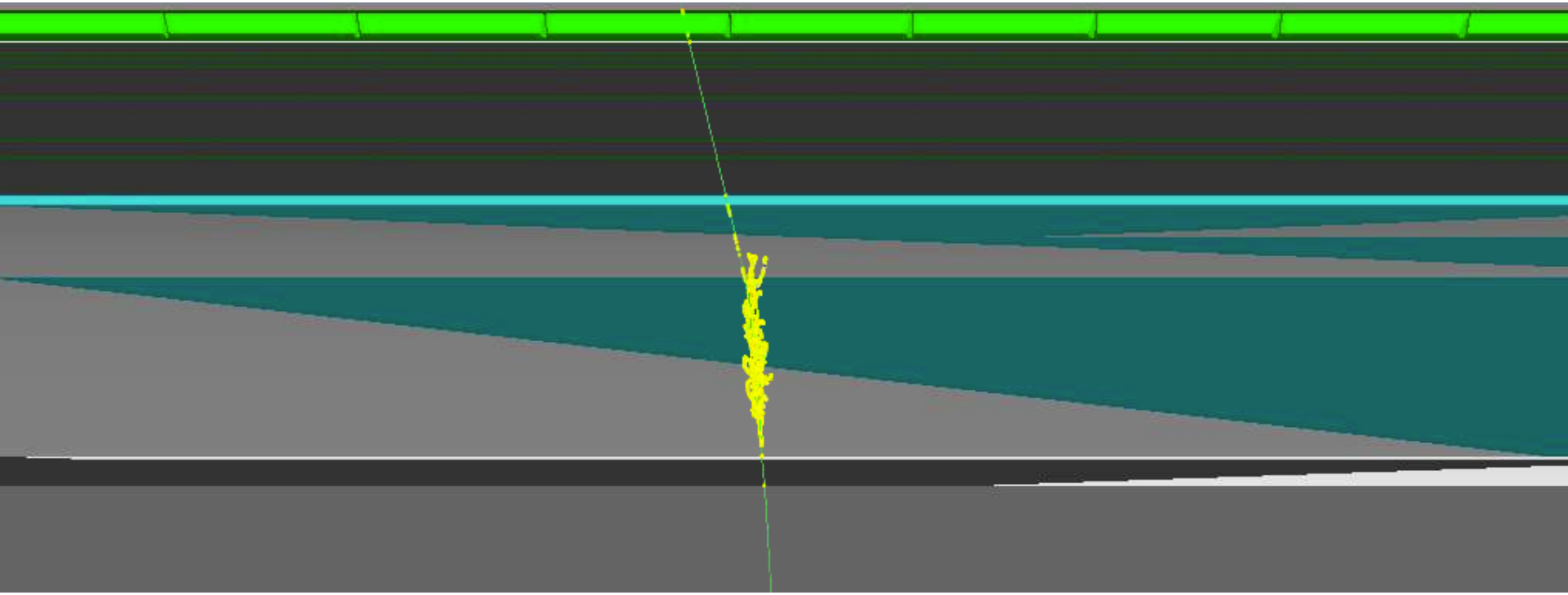

Single γ in Forward Detector, P=15 GeV/c

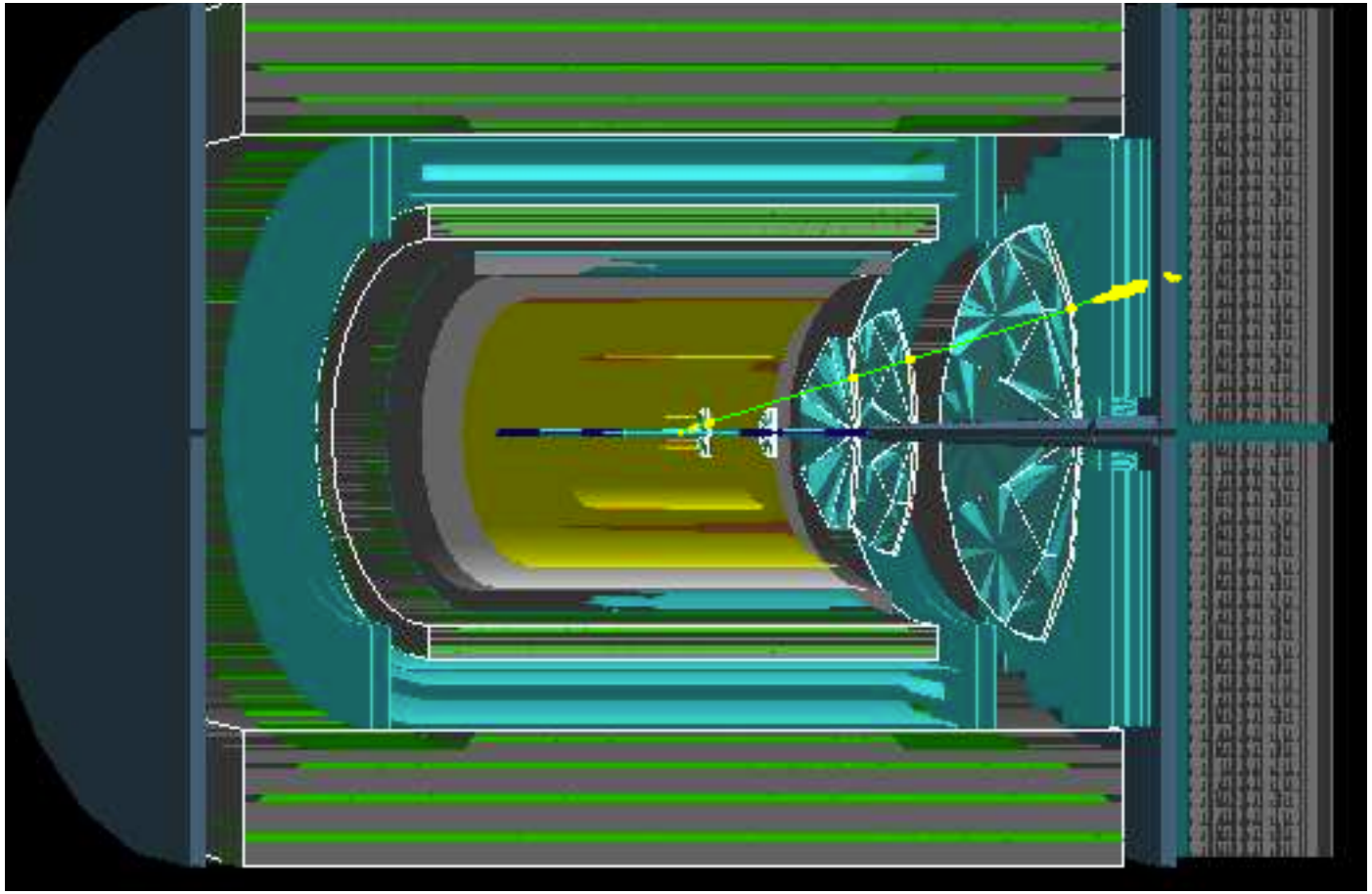

Single γ in Forward Detector, P=15 GeV/c

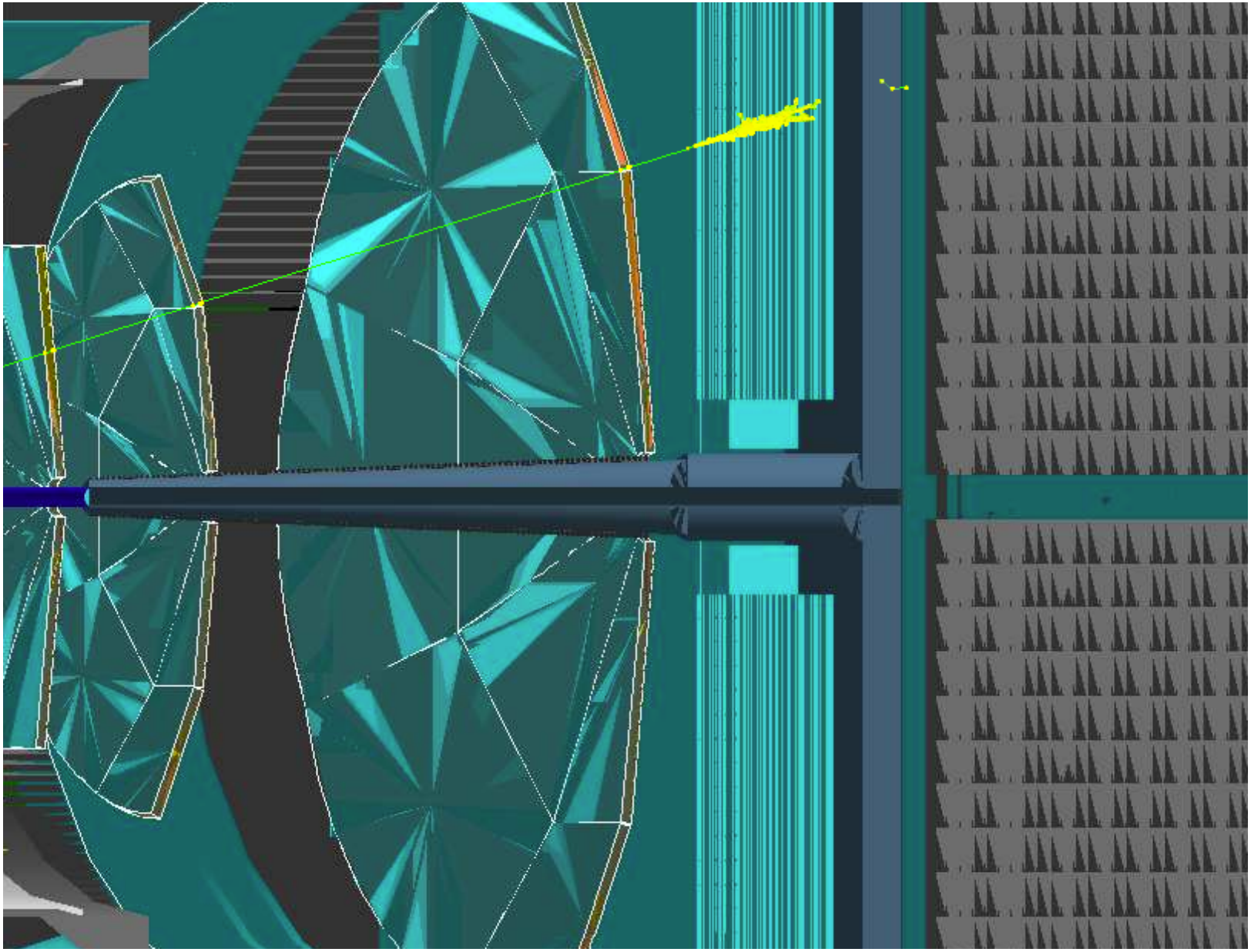

Single $\gamma \rightarrow e^+e^-$ in Forward Detector, P=15 GeV/c

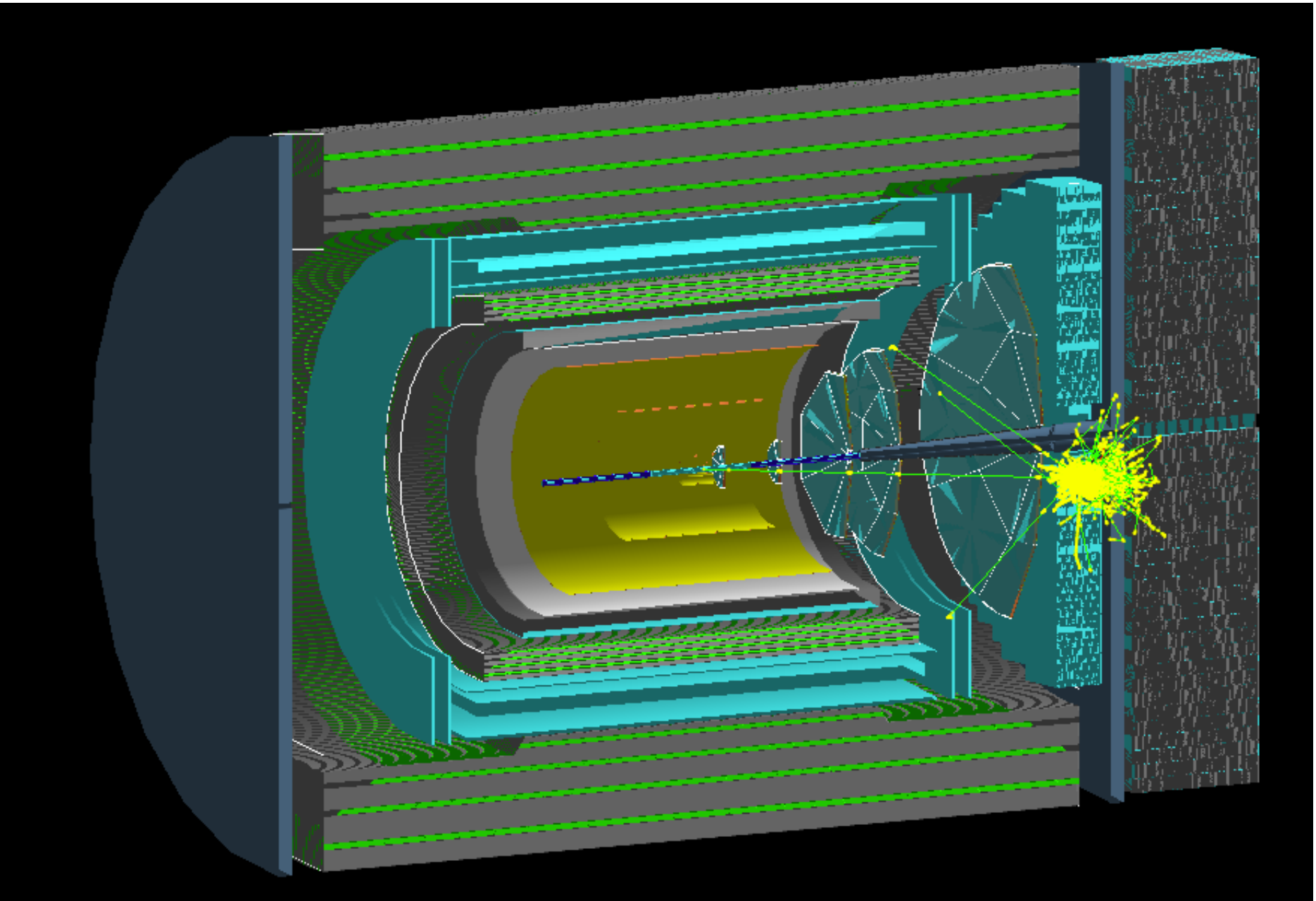

Single $\gamma \rightarrow e^+e^-$ in Forward Detector, P=15 GeV/c

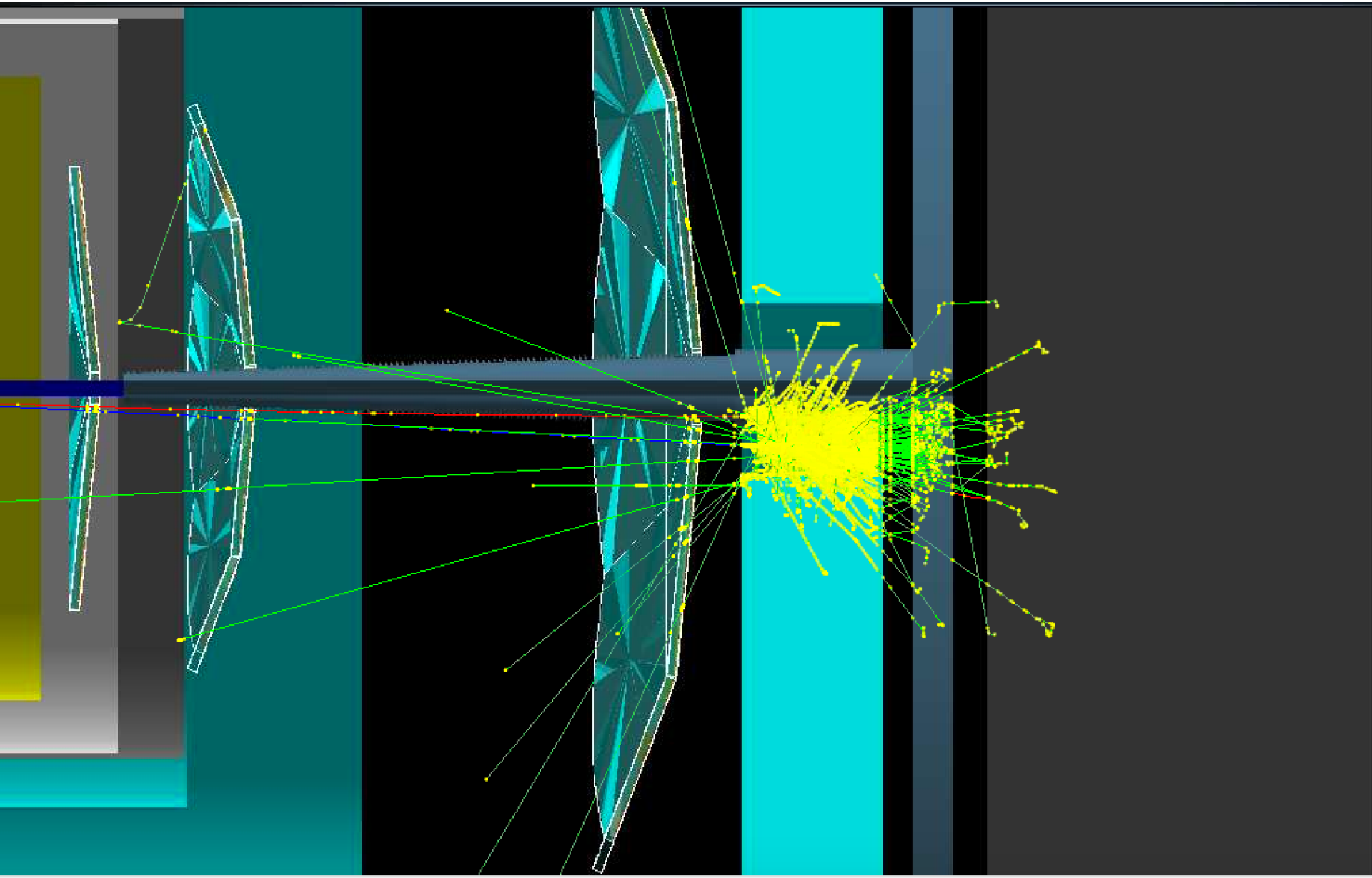

π^0 in Central Detector, P=15 GeV/c

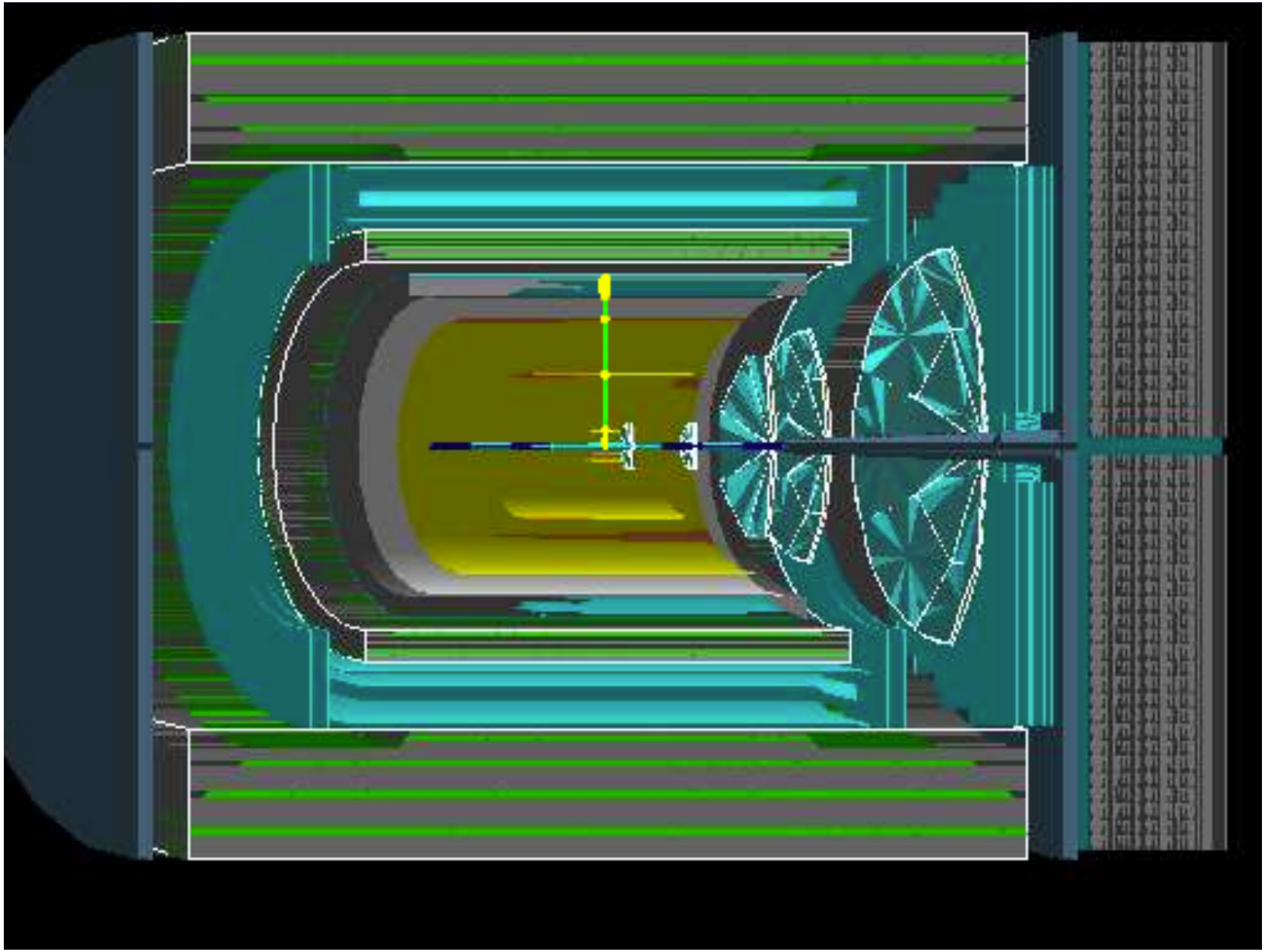

π^0 in Central Detector, P=15 GeV/c

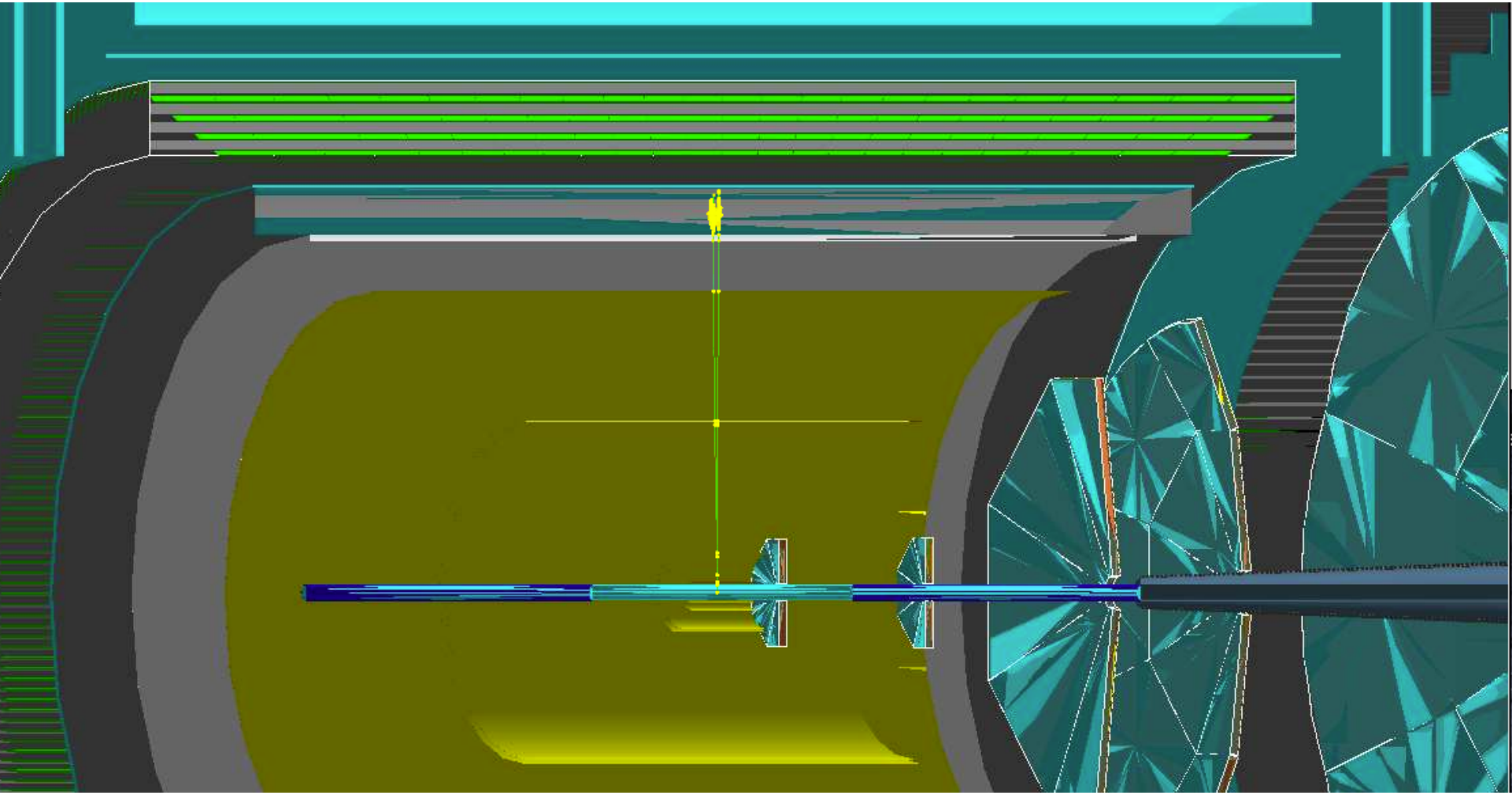

π^0 in Central Detector, P=5 GeV/c

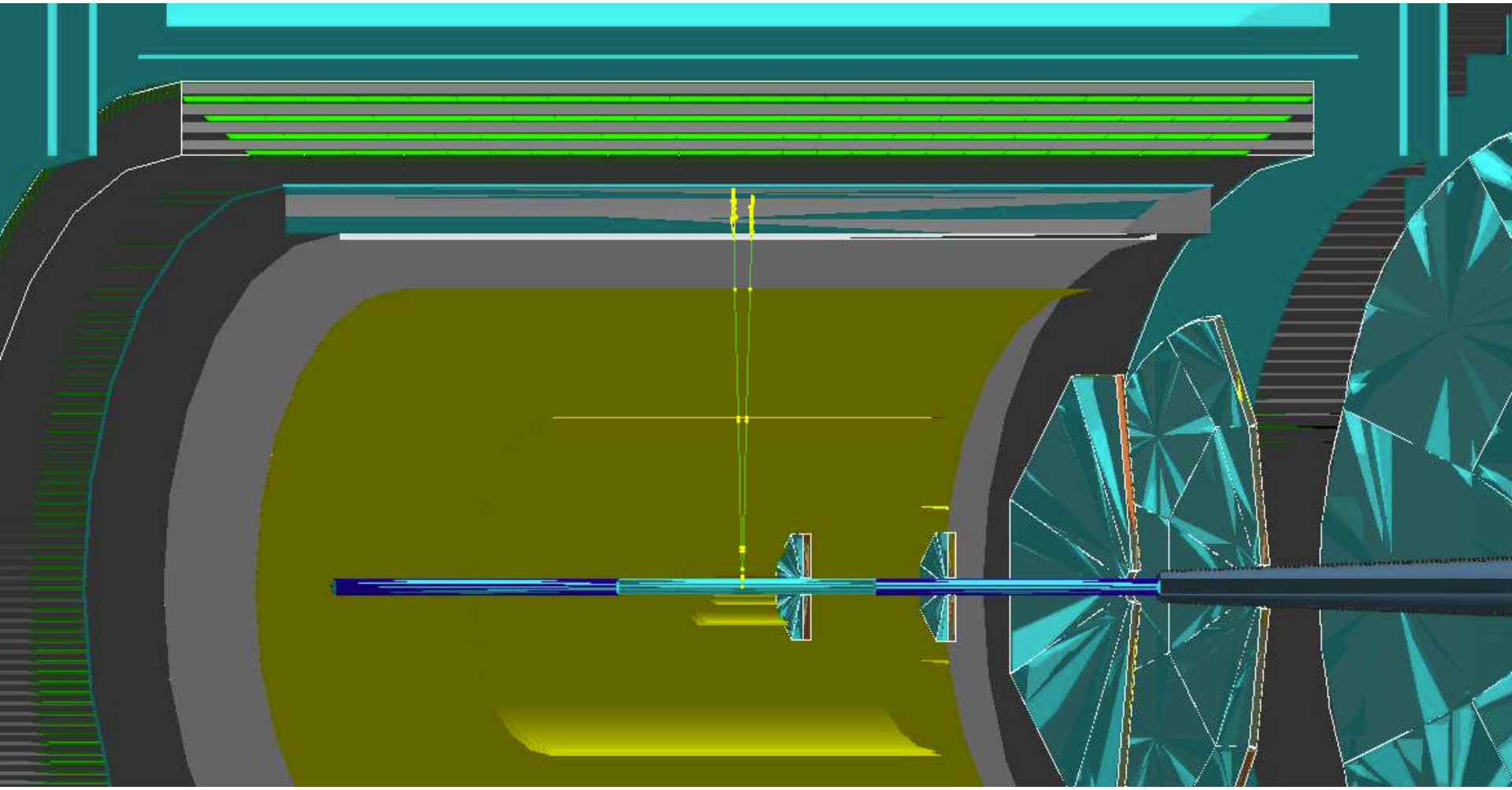

π^0 in Forward Detector, P=15 GeV

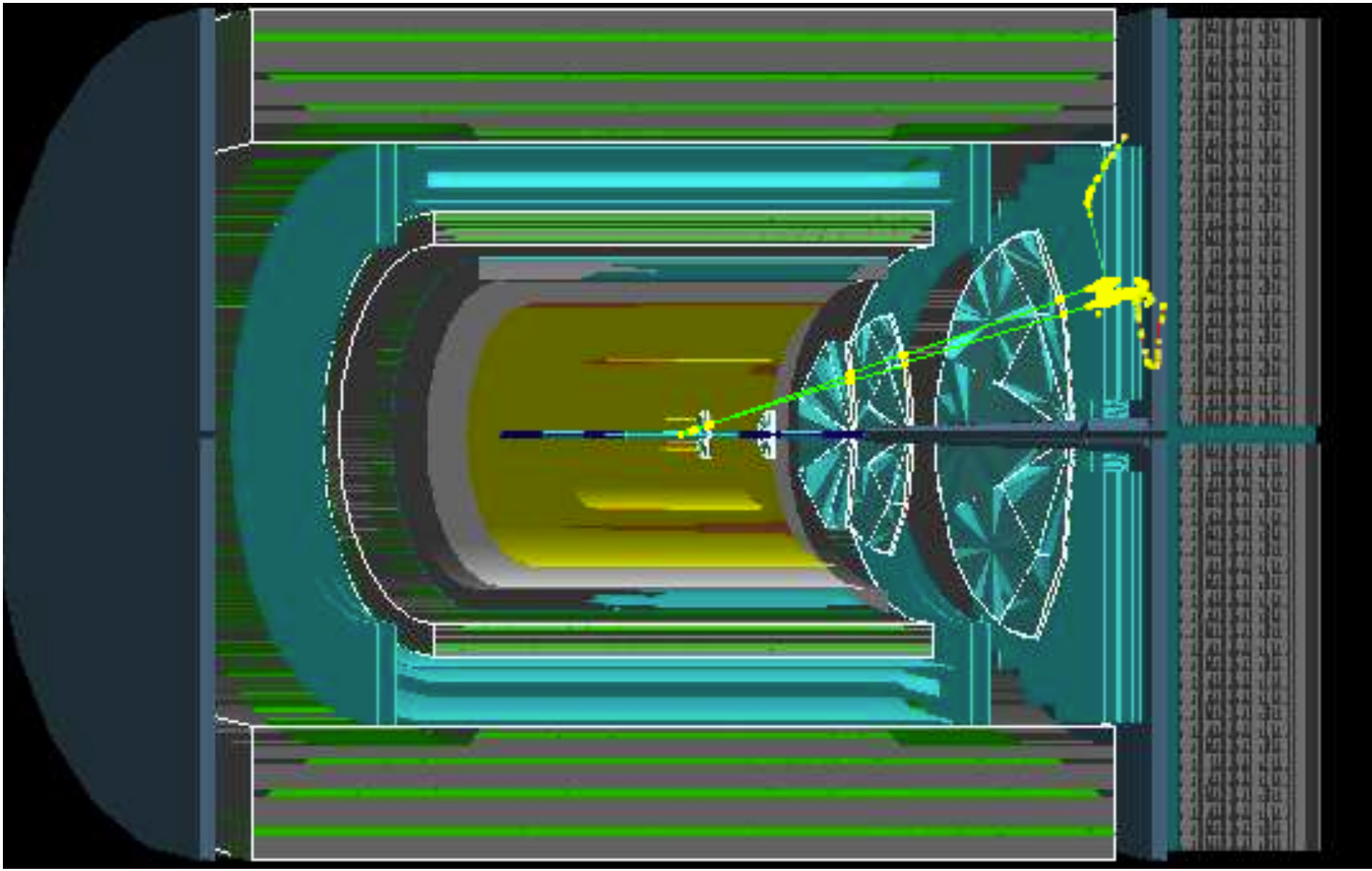

π^0 in Forward Detector, P=5 GeV/c

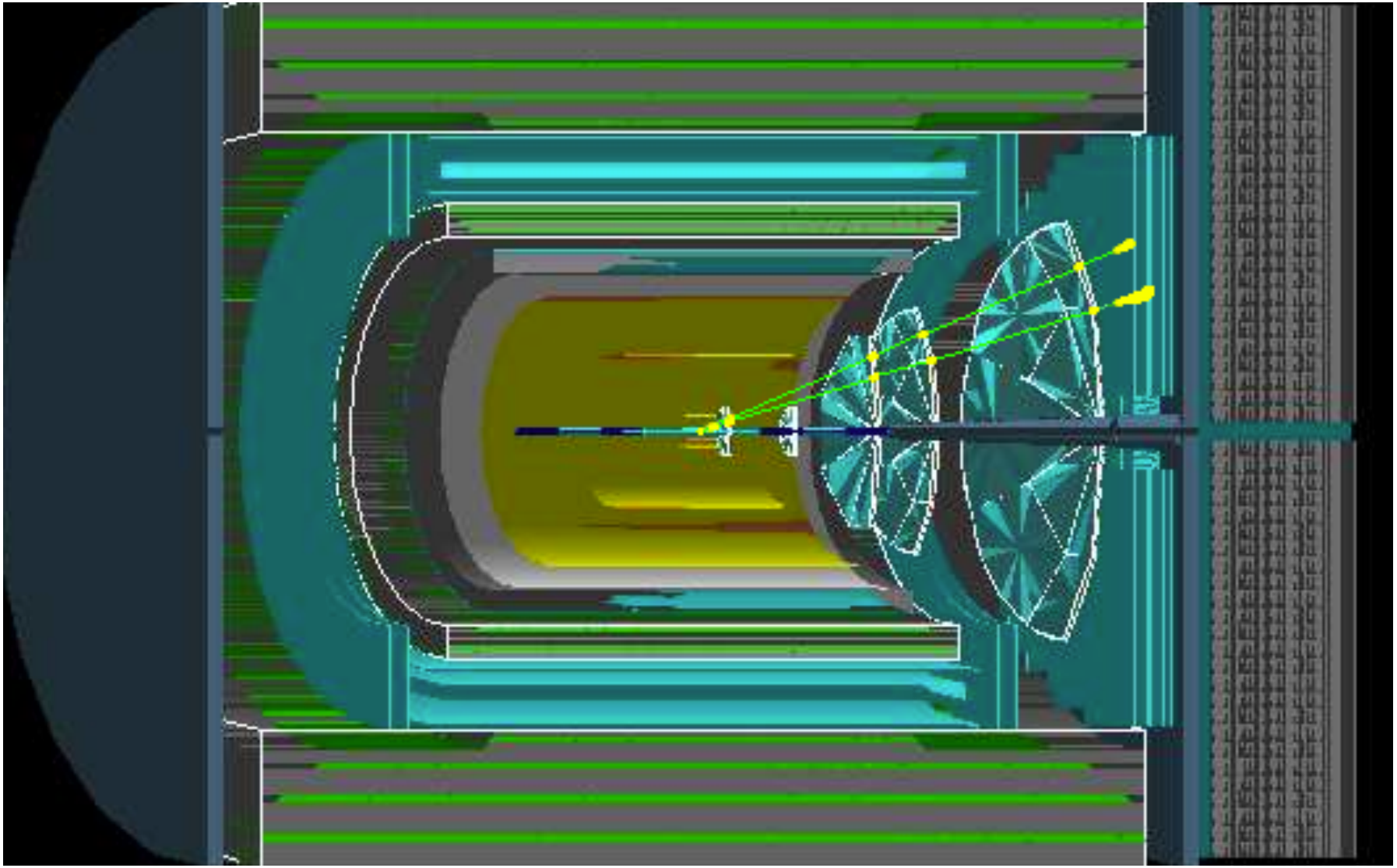

η decay Modes

η DECAY MODES

	Mode	Fraction (Γ_i/Γ)	Scale factor/ Confidence level
	Neutral modes		
Γ_1	neutral modes	(72.12 ± 0.34) %	S=1.2
Γ_2	2γ	(39.41 ± 0.20) %	S=1.1
Γ_3	$3\pi^0$	(32.68 ± 0.23) %	S=1.1

η in Central Detector, P= 15 GeV/c

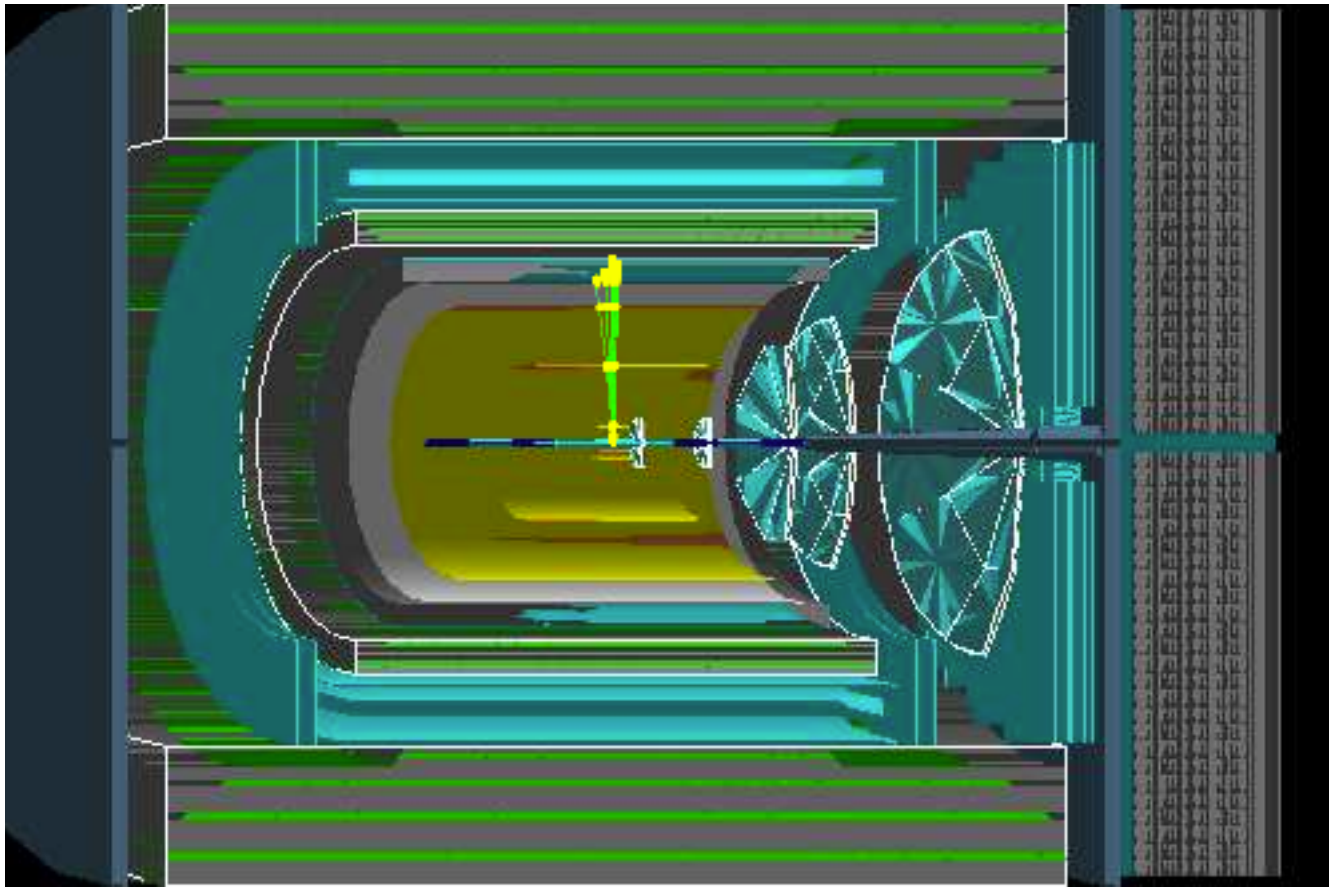

η in Central Detector, P= 15 GeV/c

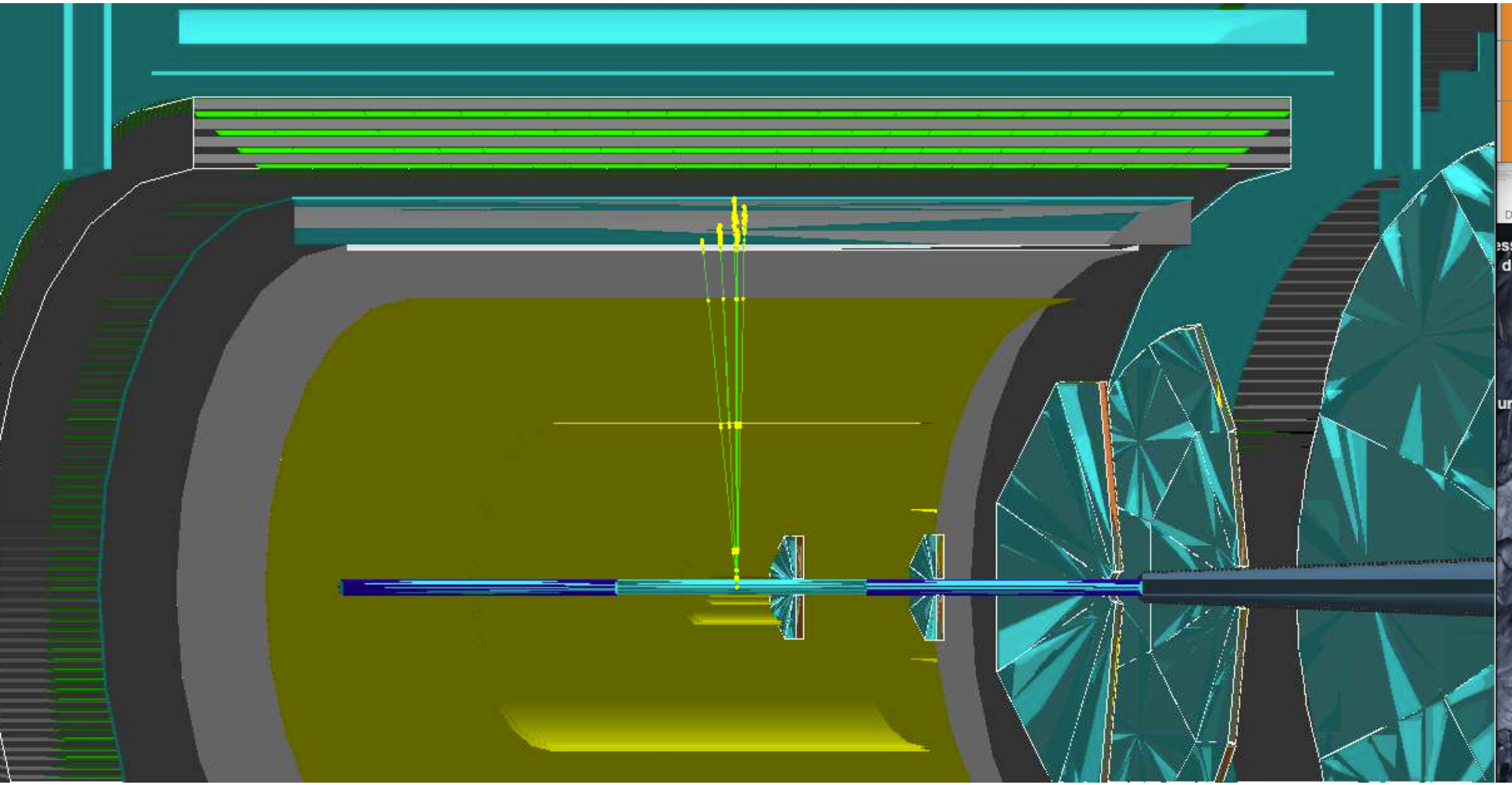

η in Central Detector, P= 5 GeV/c

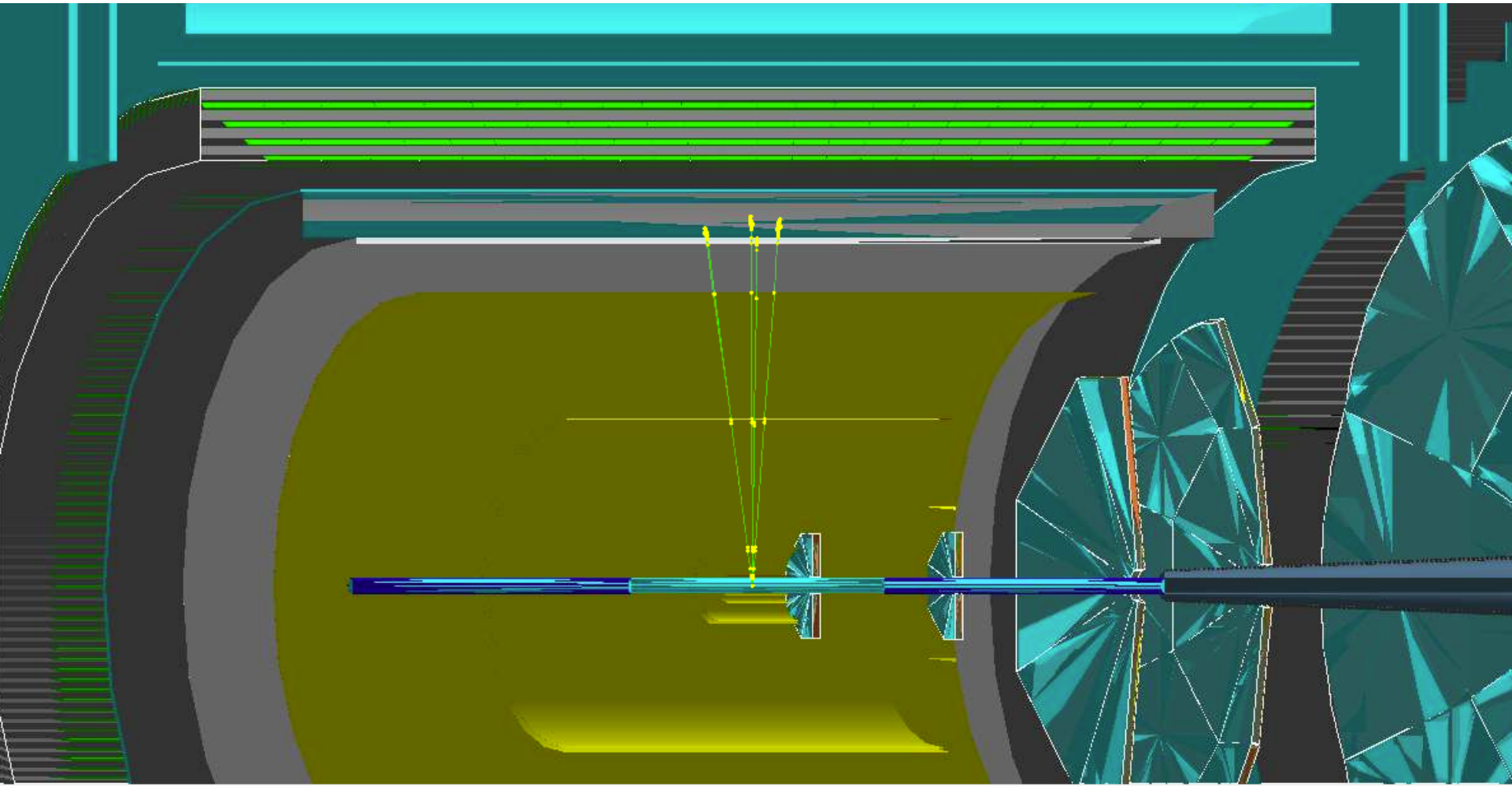

η in Forward Detector, P= 15 GeV/c

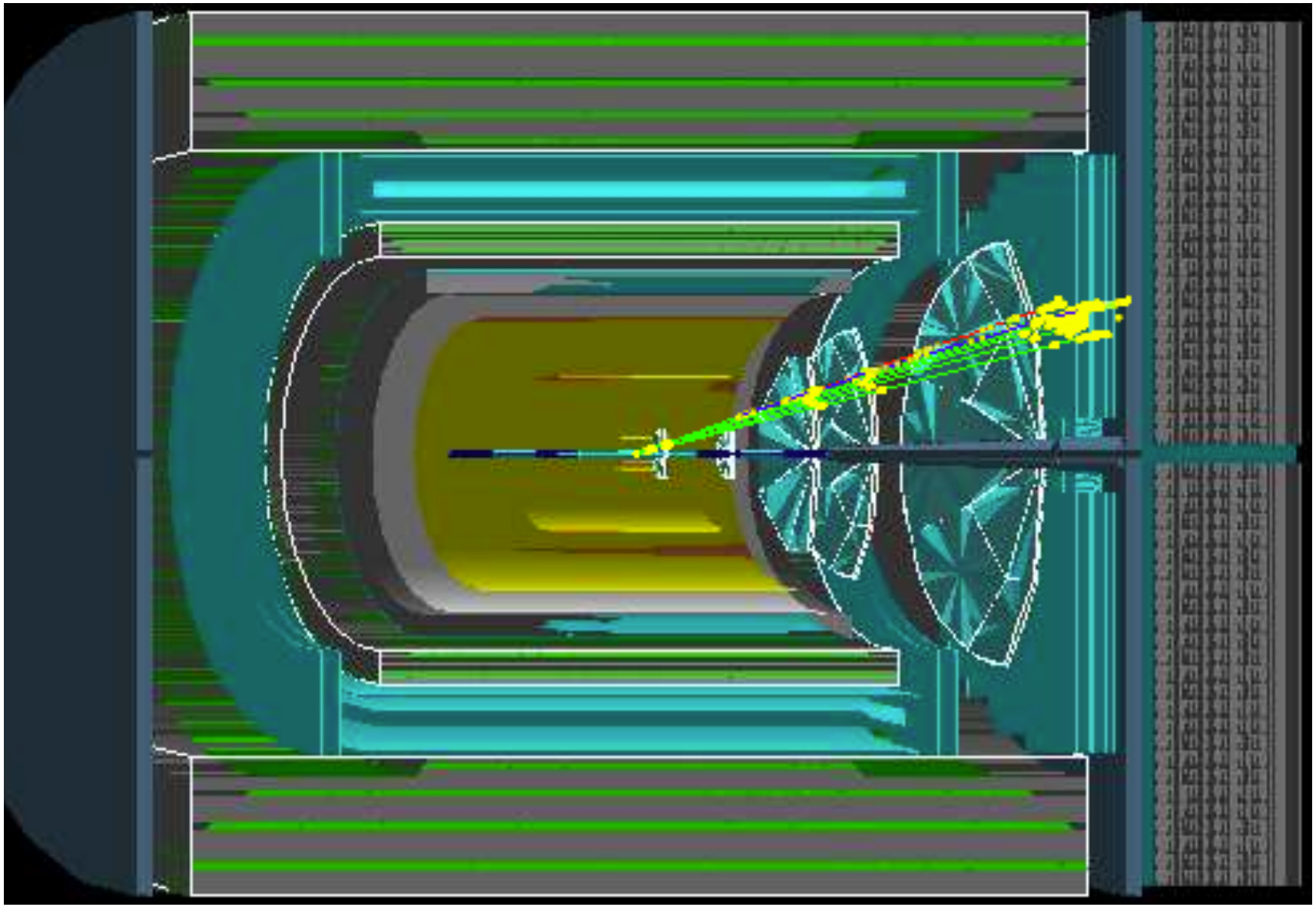

η in Forward Detector, P= 15 GeV/c

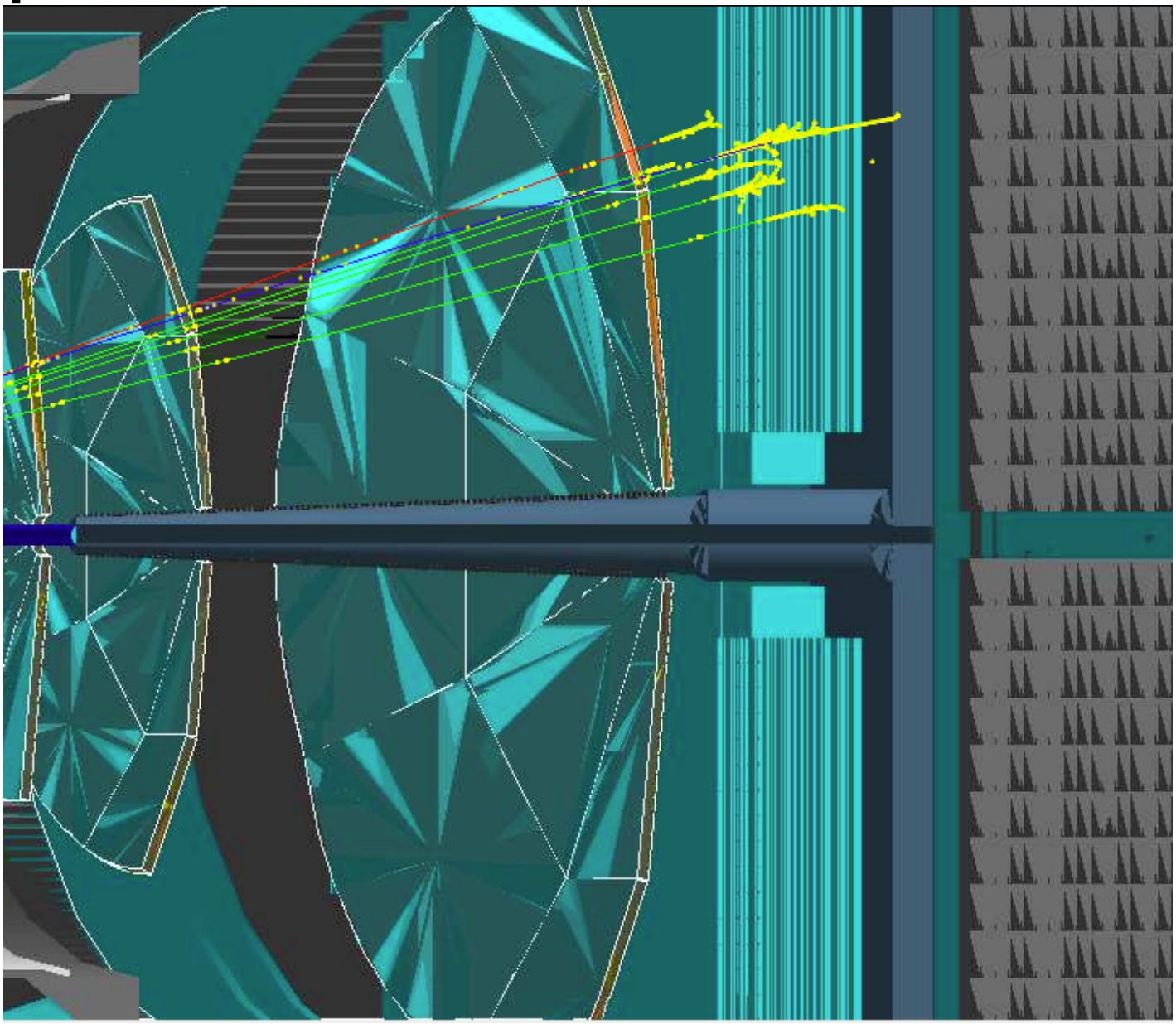

η in Forward Detector, P= 5 GeV/c

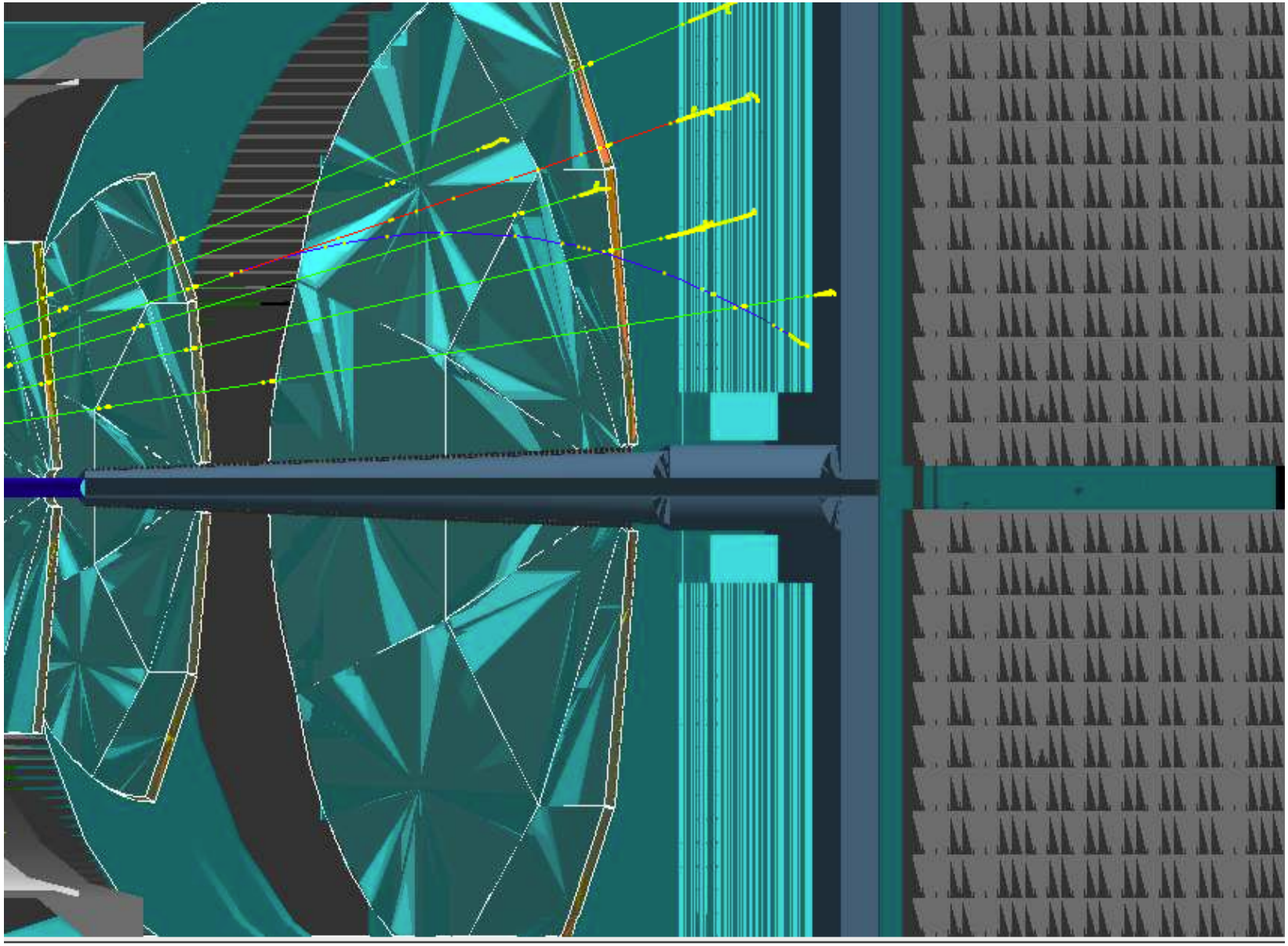

MB event in fsPHENIX Detector, pp 200 GeV p>20MeV

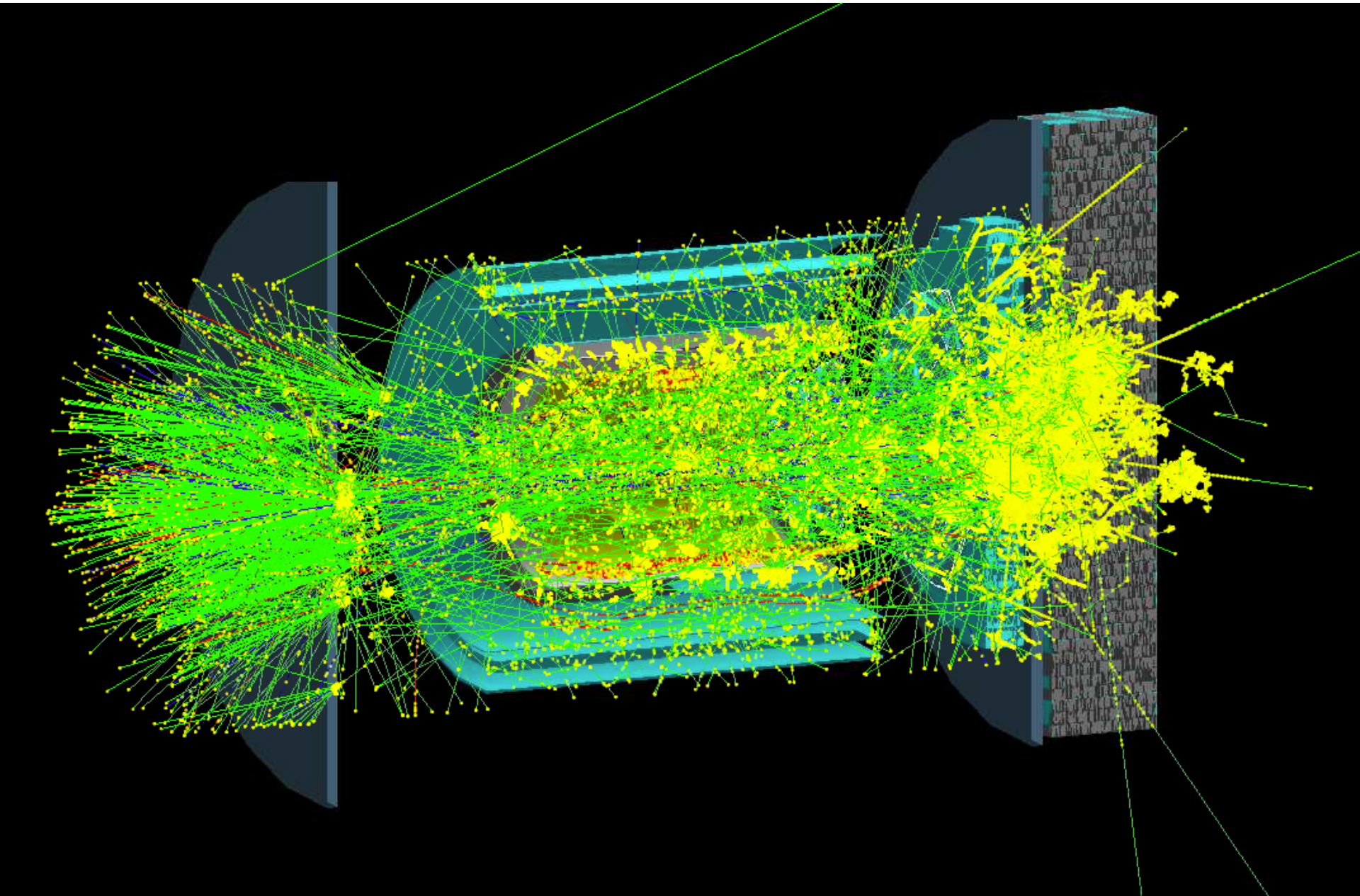

MB event in fsPHENIX Detector, pp 200 GeV p>100MeV

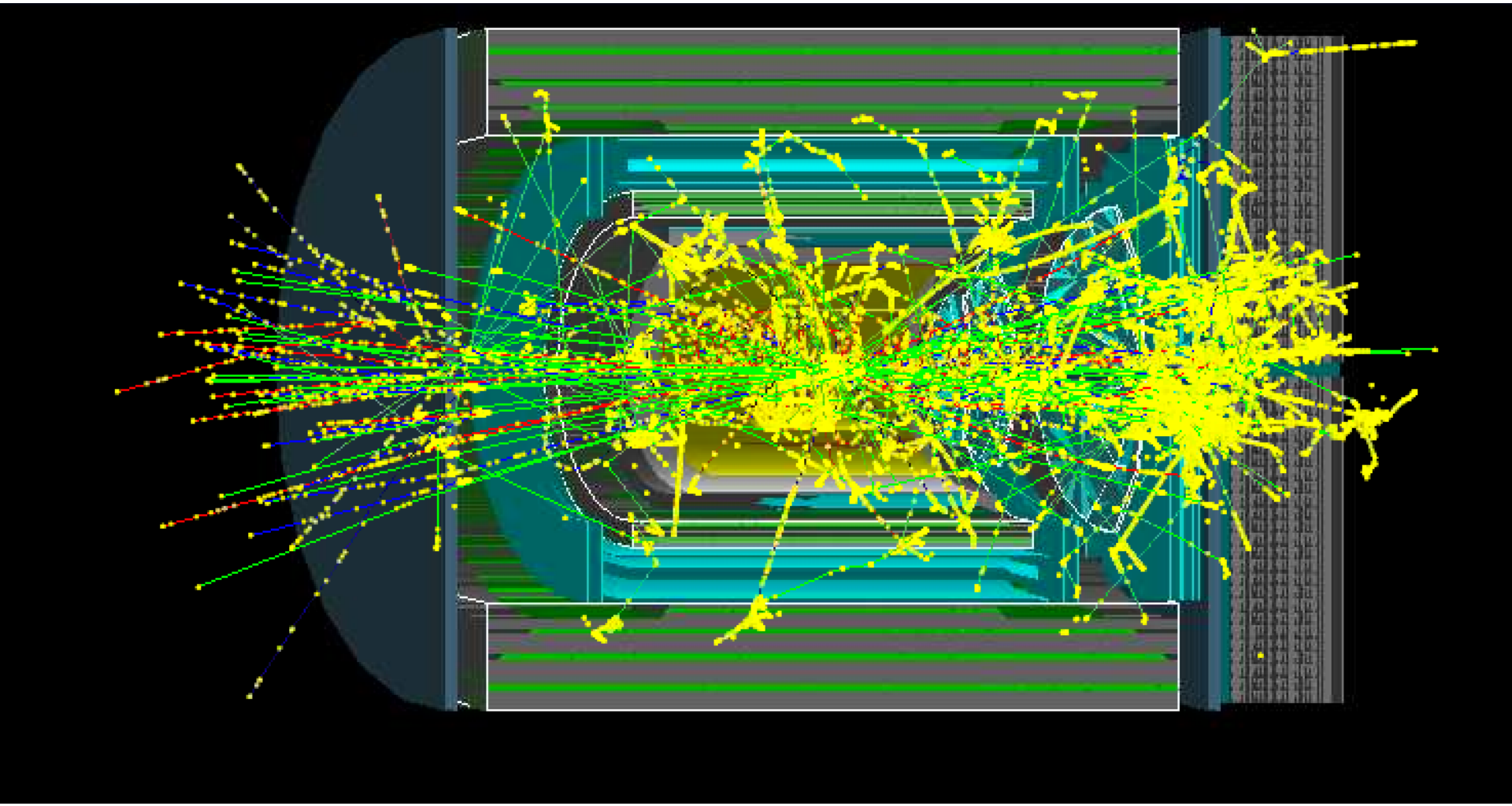

Three γ's in Central Detector, P=15 GeV/c

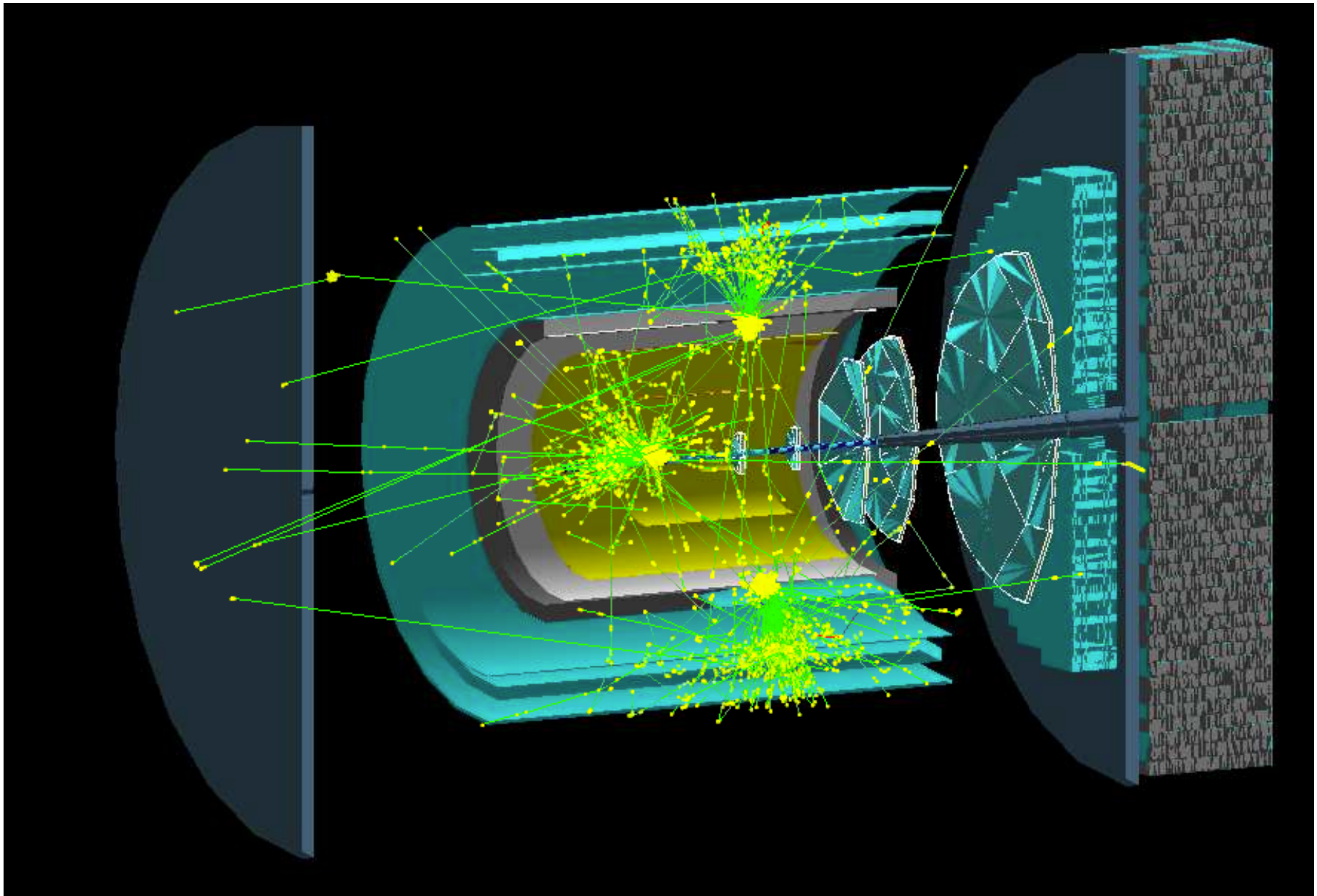

Three γ's in Forward Detector, P=15 GeV/c

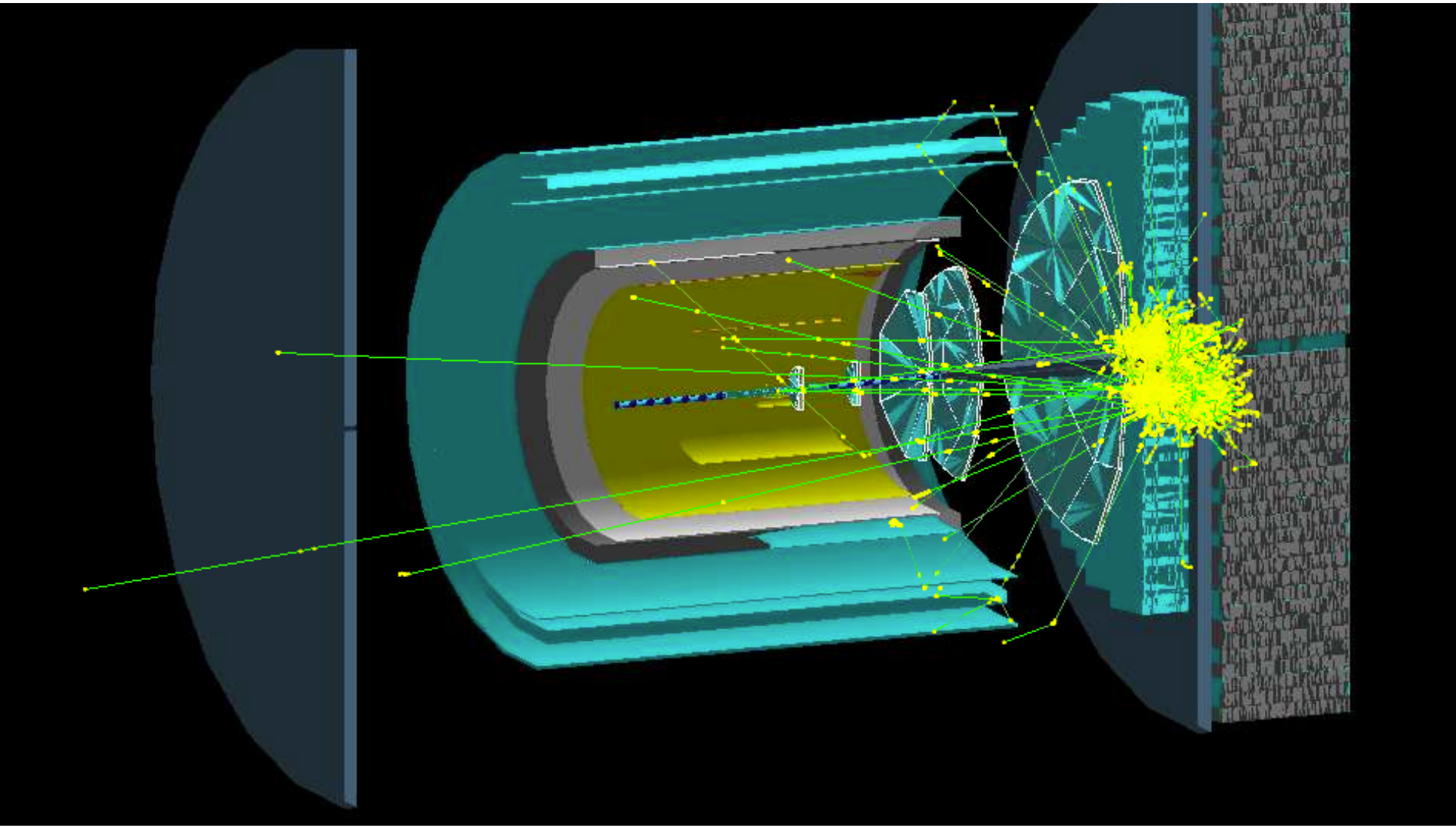

Three π^0 in Central Detector, P=5 GeV/c

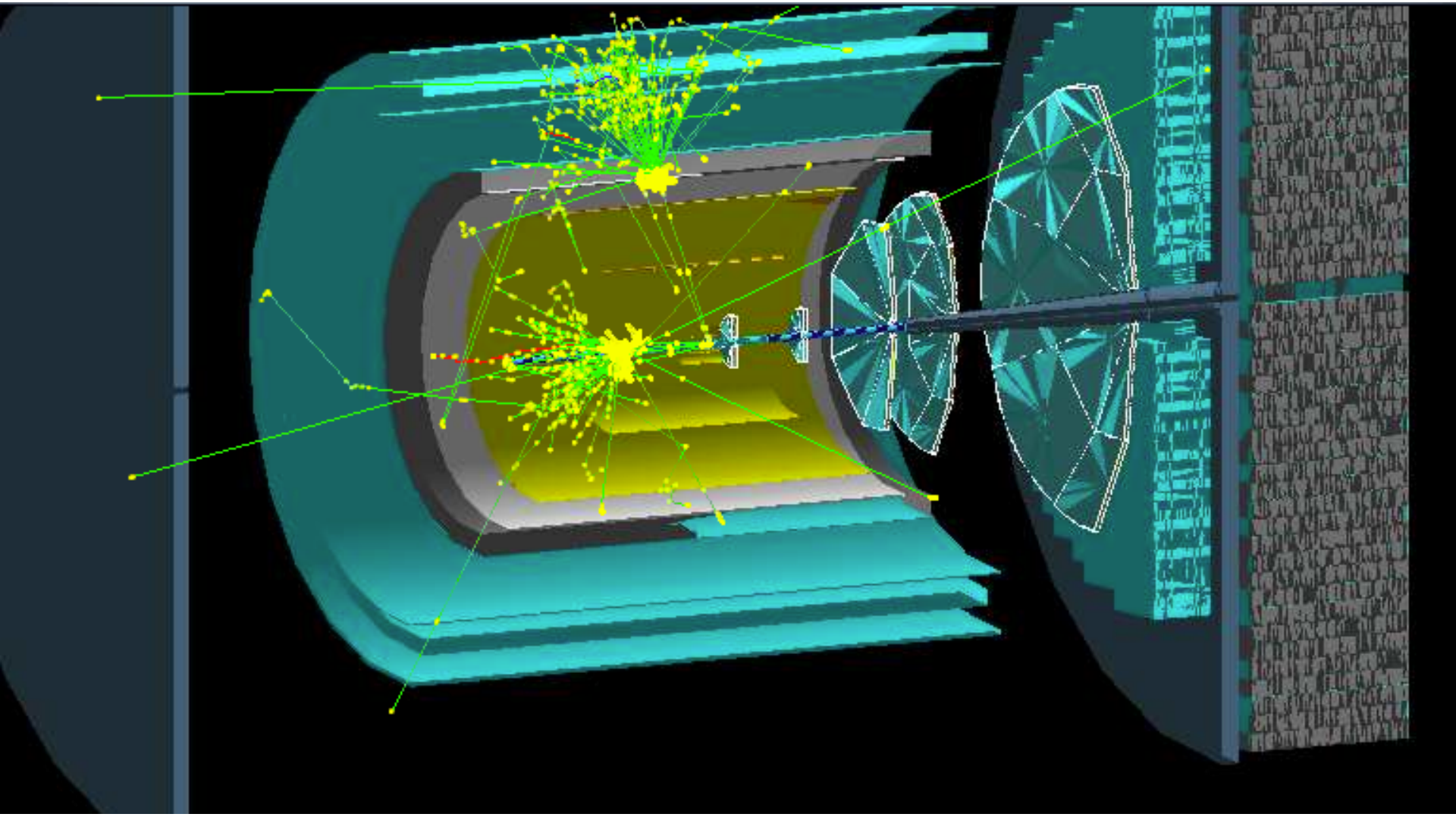

Three π^0 in Forward Detector, P=5 GeV

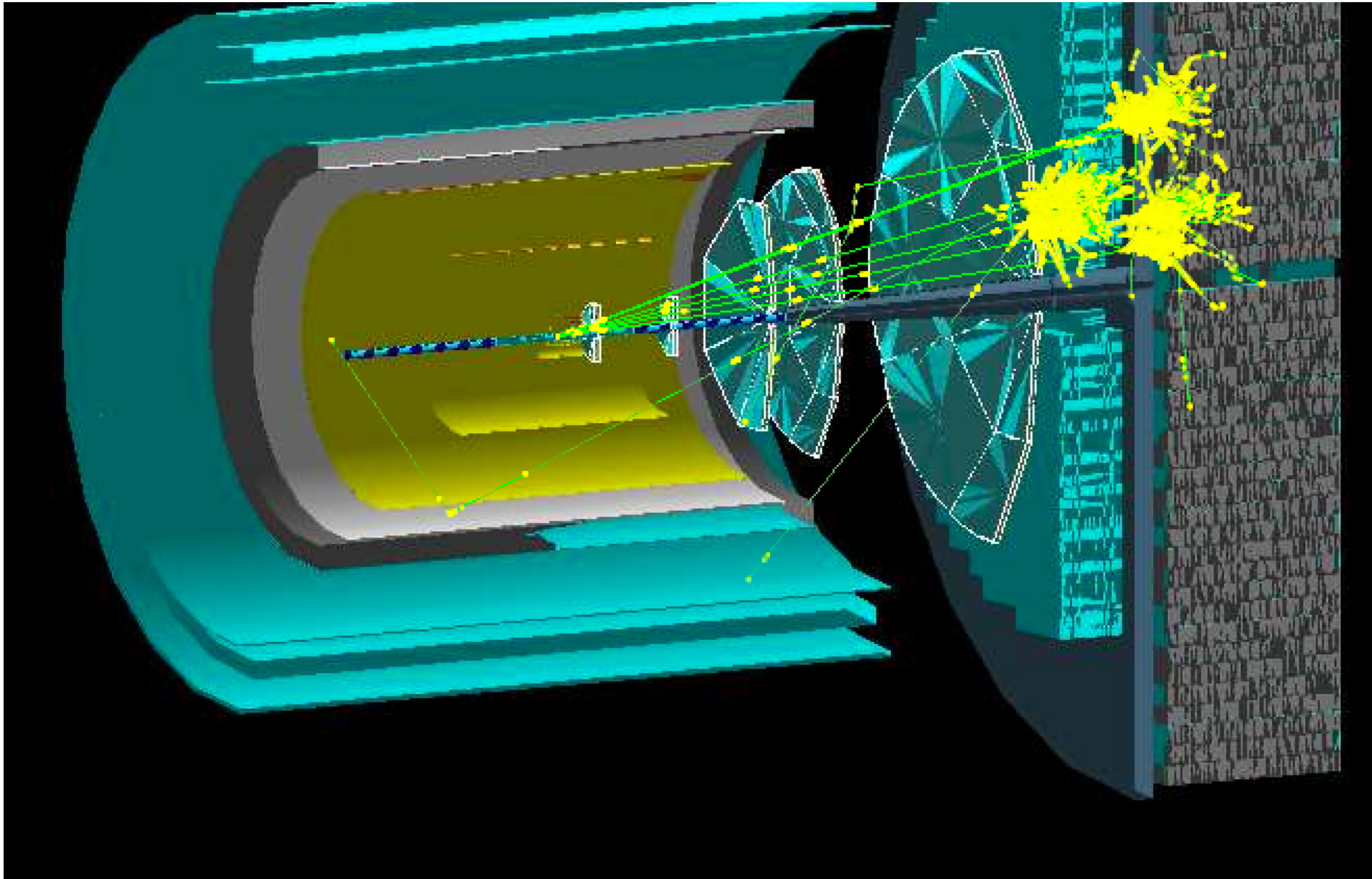

Three η in Central Detector, P= 5 GeV/c

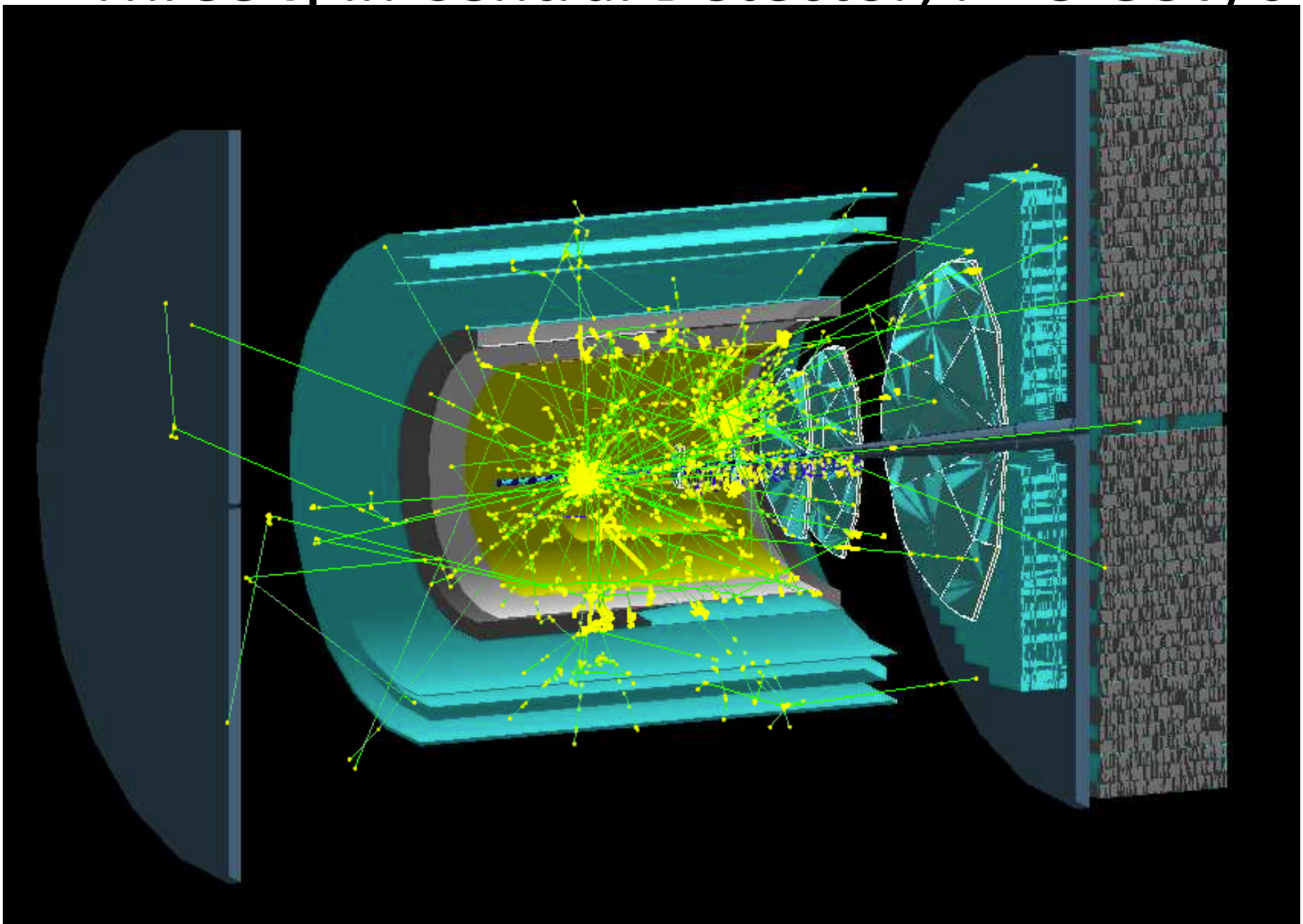
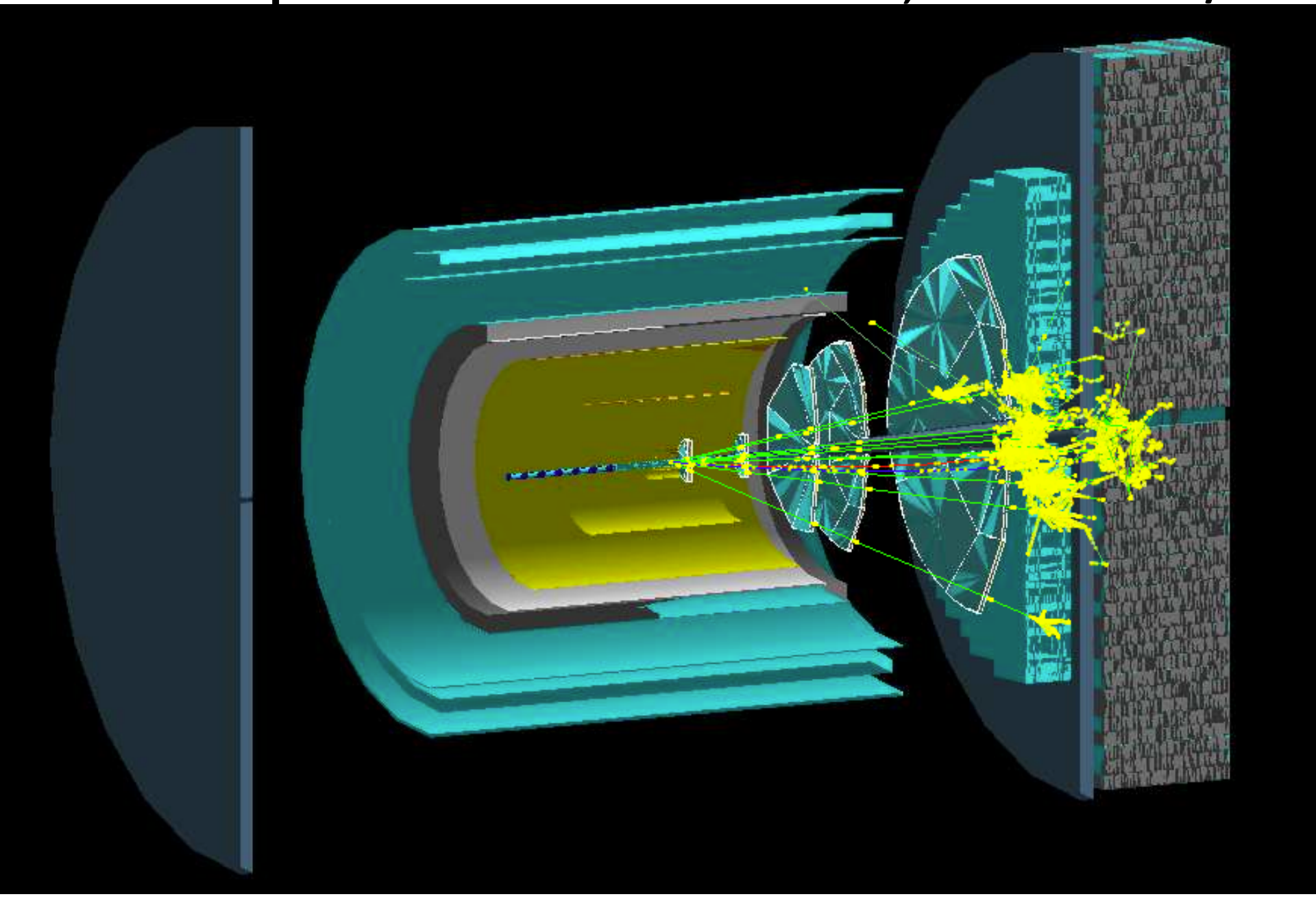
Three η in Forward Detector, P= 5 GeV/c