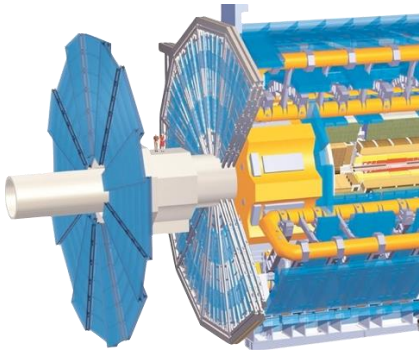

UT-Austin ADC Design ATLAS LAr Calorimeter at HL-LHC

Chen-Kai Hsu

ckhsu@utexas.edu

March 3, 2017

Layout(OPAMP)

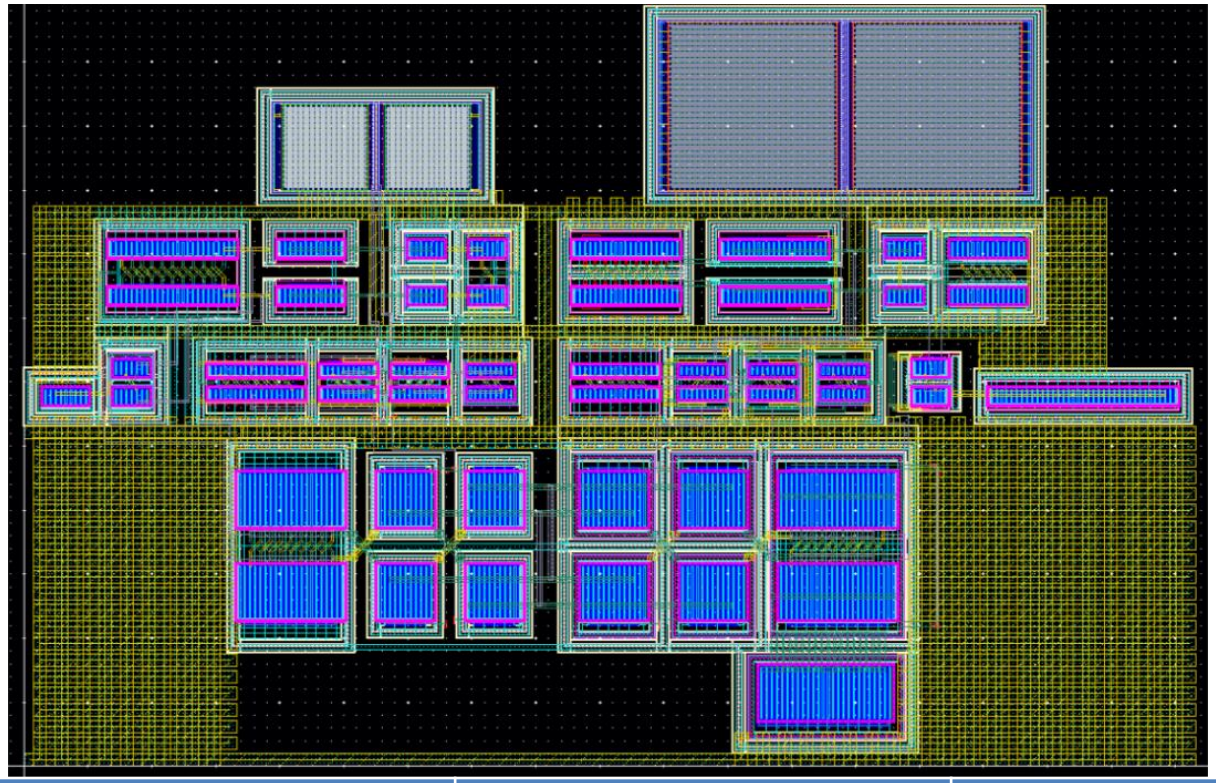

	Pre-Sim	Pos-sim(R+C+CC)
Supply Voltage	1.2 V	1.2 V
DC Gain	90.25dB	89.71 dB
PhaseMargin	67 degree	65 degree
Unit-Gain Freq	2.642GHz	2.25GHz

Layout(Comparator)

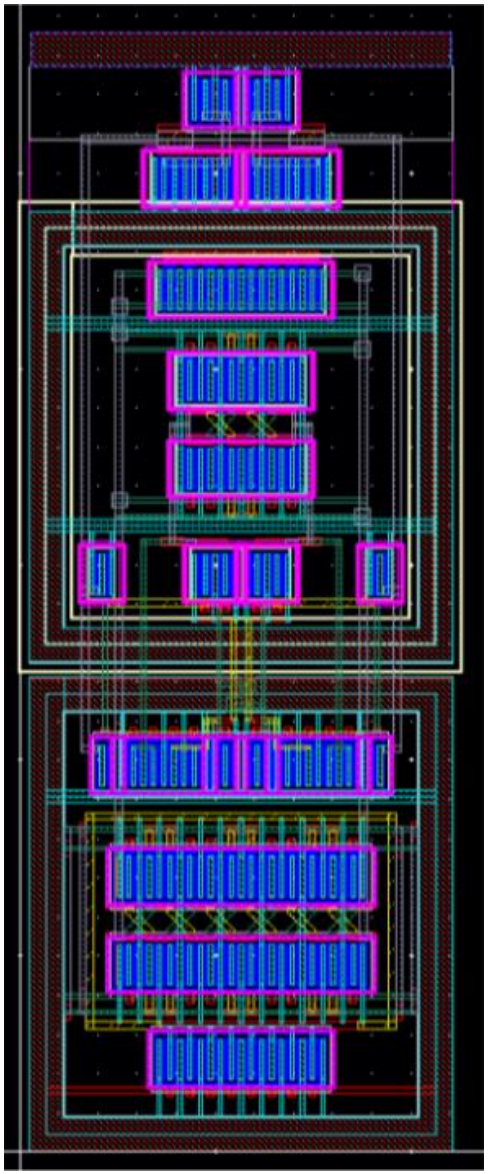

	Pre-sim	Pos-sim(R+C+CC)
Offset	0	960 uV
Noise	300 uV	260 uV

Floor Plan

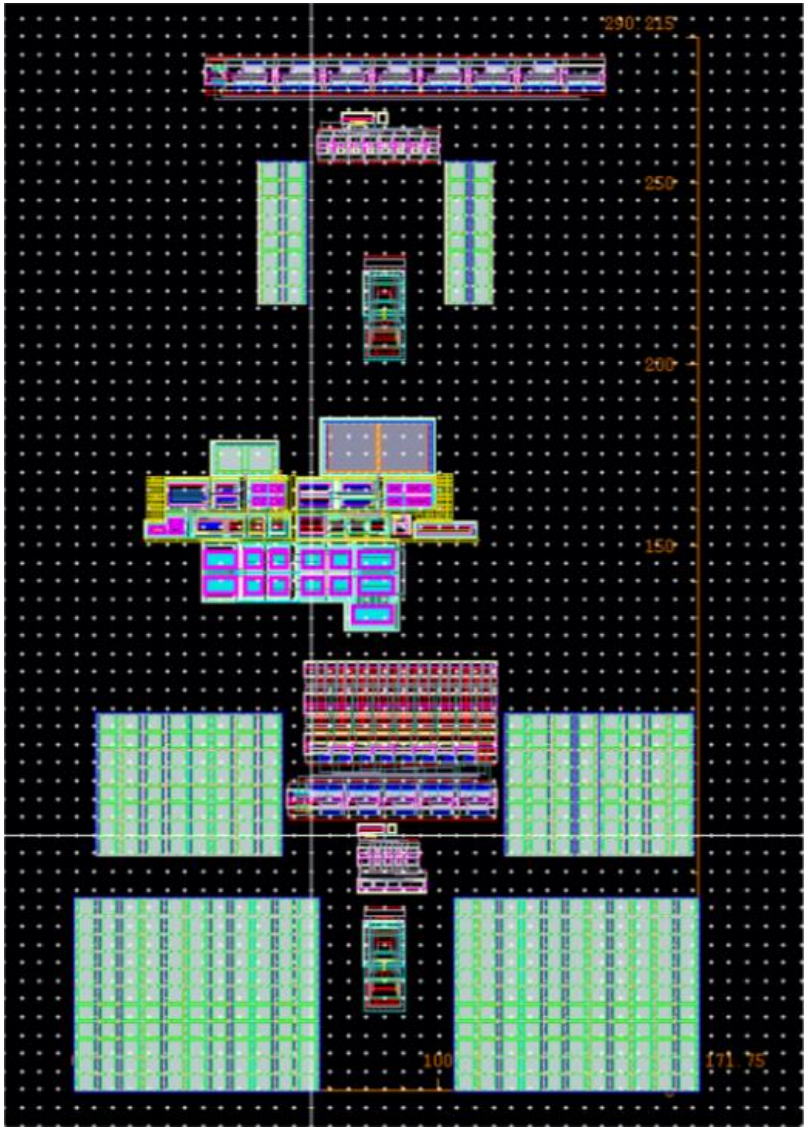

	Area
Stage 1	171um*120um
Stage 2	171um*100um
OPAMP	91um*60um
Core Area	171um*300um

Schedule

	Now~2/28	March
✓	1st Sar Logic	Whole Chip routing & post-sim
✓	2nd Sar Logic	
✓	CLK_GEN	
✓	Comparator	
✓	Amplifier	
	Bootstrap SW	
	DAC	

1P9M or 1P6M

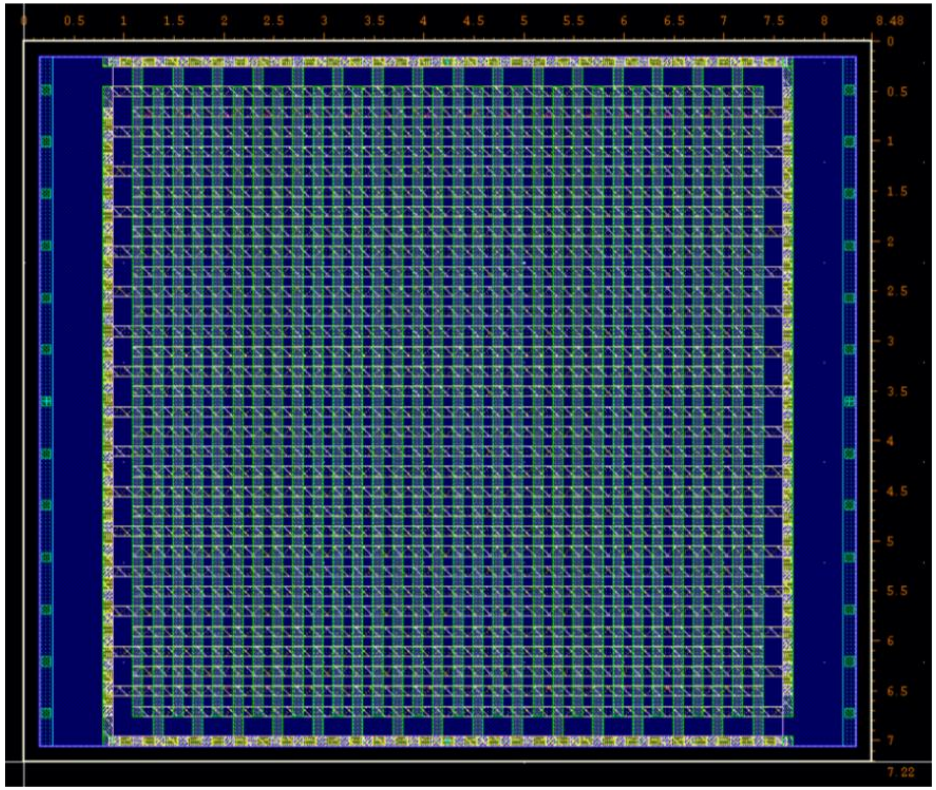

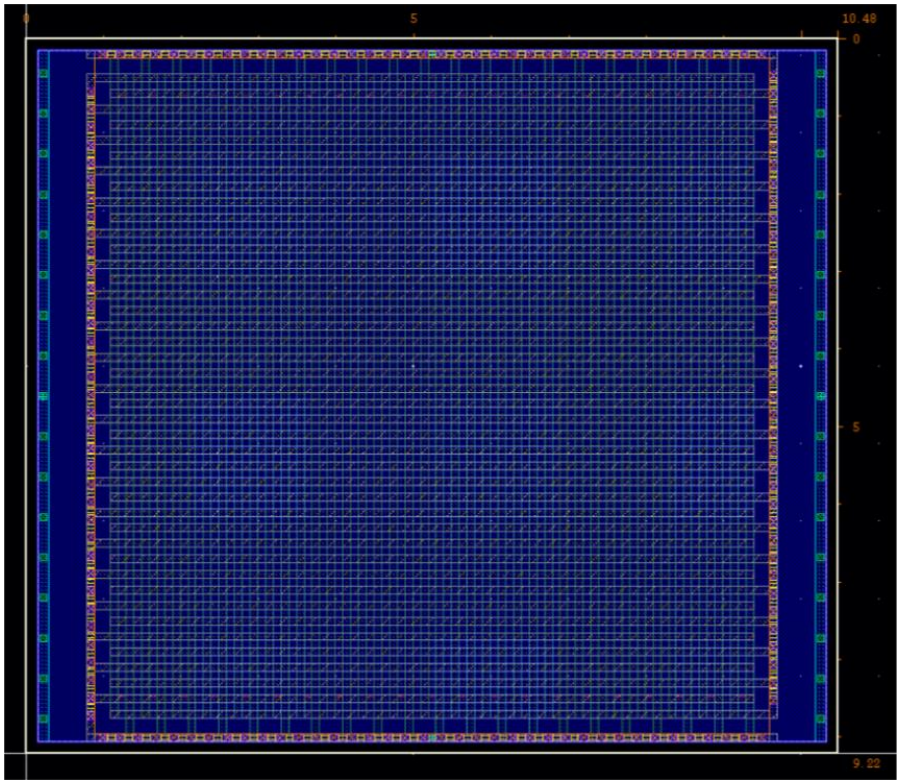

Same capacitance	1P9M	1P6M
Area(145fF)	8.5 um*7.3 um	10.5 um * 9.3 um

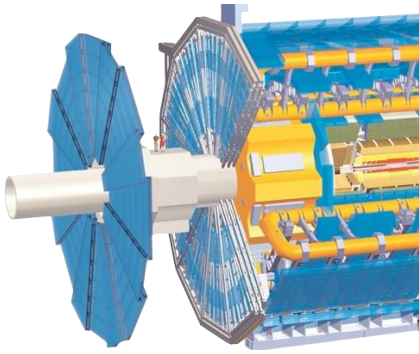

UT-Austin ADC Design ATLAS LAr Calorimeter at HL-LHC

Chen-Kai Hsu

ckhsu@utexas.edu

Feb 17, 2017

Adjustment on CLK Gen

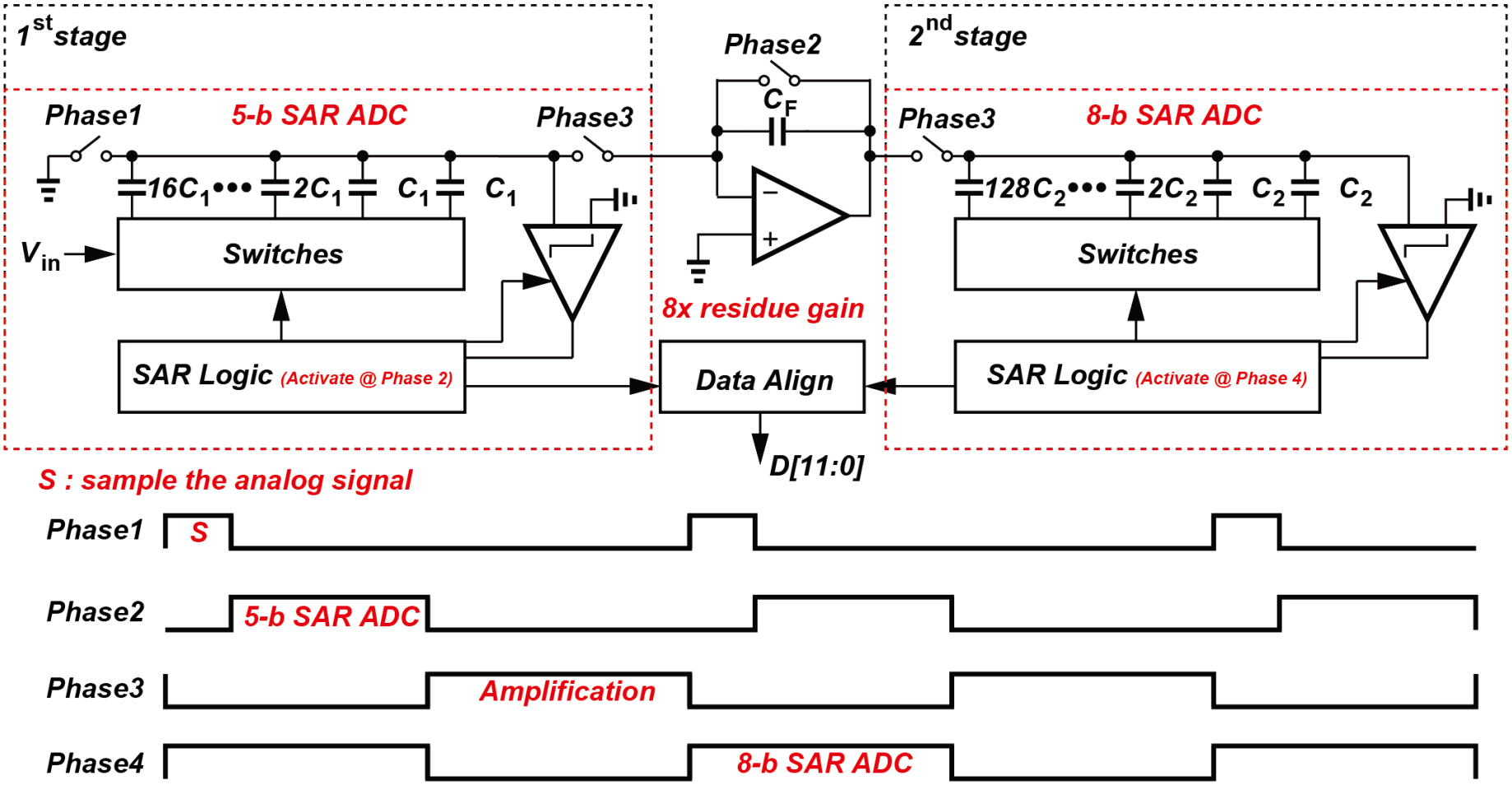

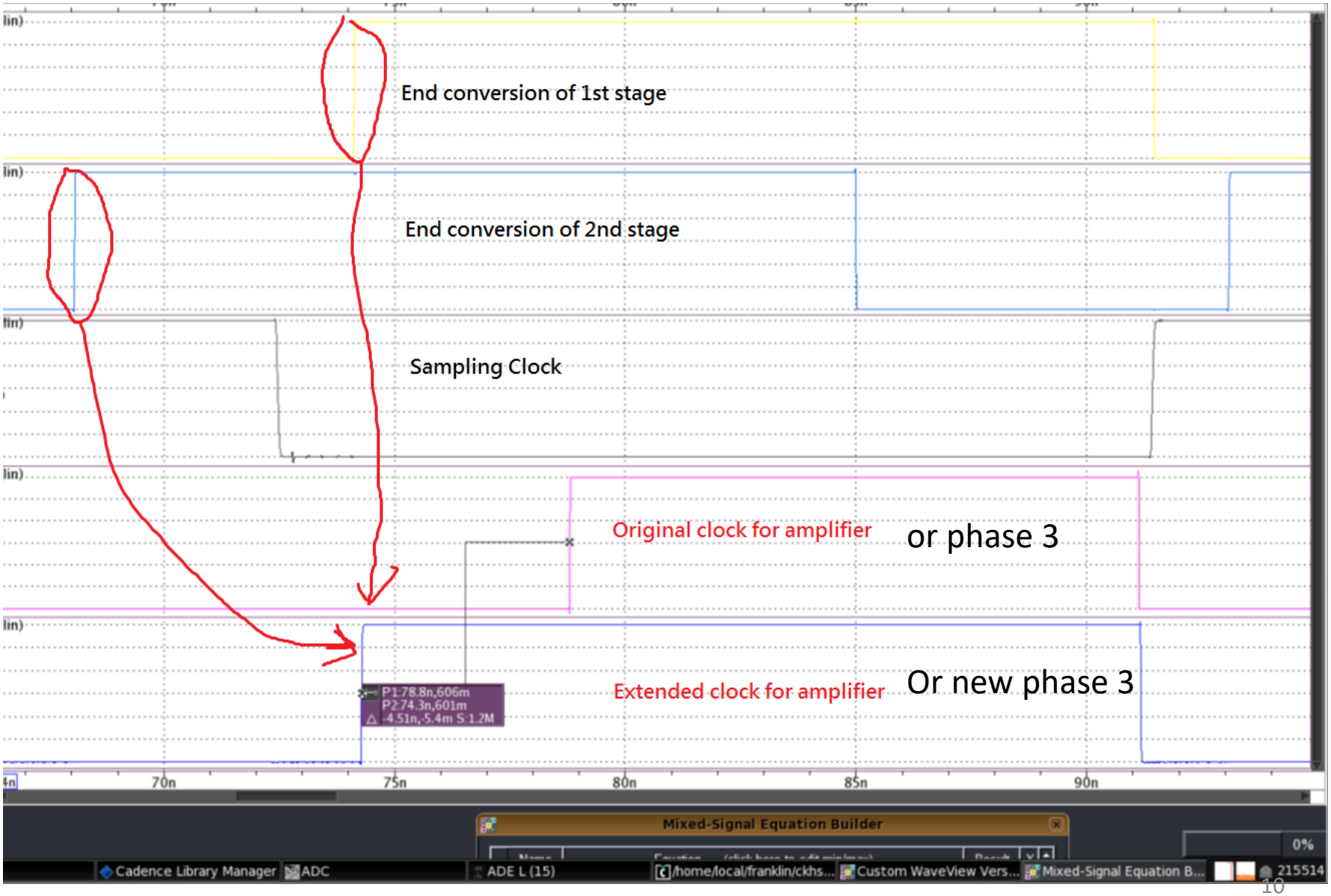
End conversion of 1st stage
End conversion of 2nd stage
Sampling Clock
Original clock for amplifier
or phase 3
Extended clock for amplifier
Or new phase 3
P1:78.8n,606m
P2:74.3n,601m
-4.51n,-5.4m S:1.2M
70n
75n
80n
85n
90n
Mixed-Signal Equation Builder
Cadence Library Manager
ADC
ADE L (15)
/home/local/franklin/ckhs...
Custom WaveView Vers...
Mixed-Signal Equation B...

1st stage SAR logic

Area	51um*47um

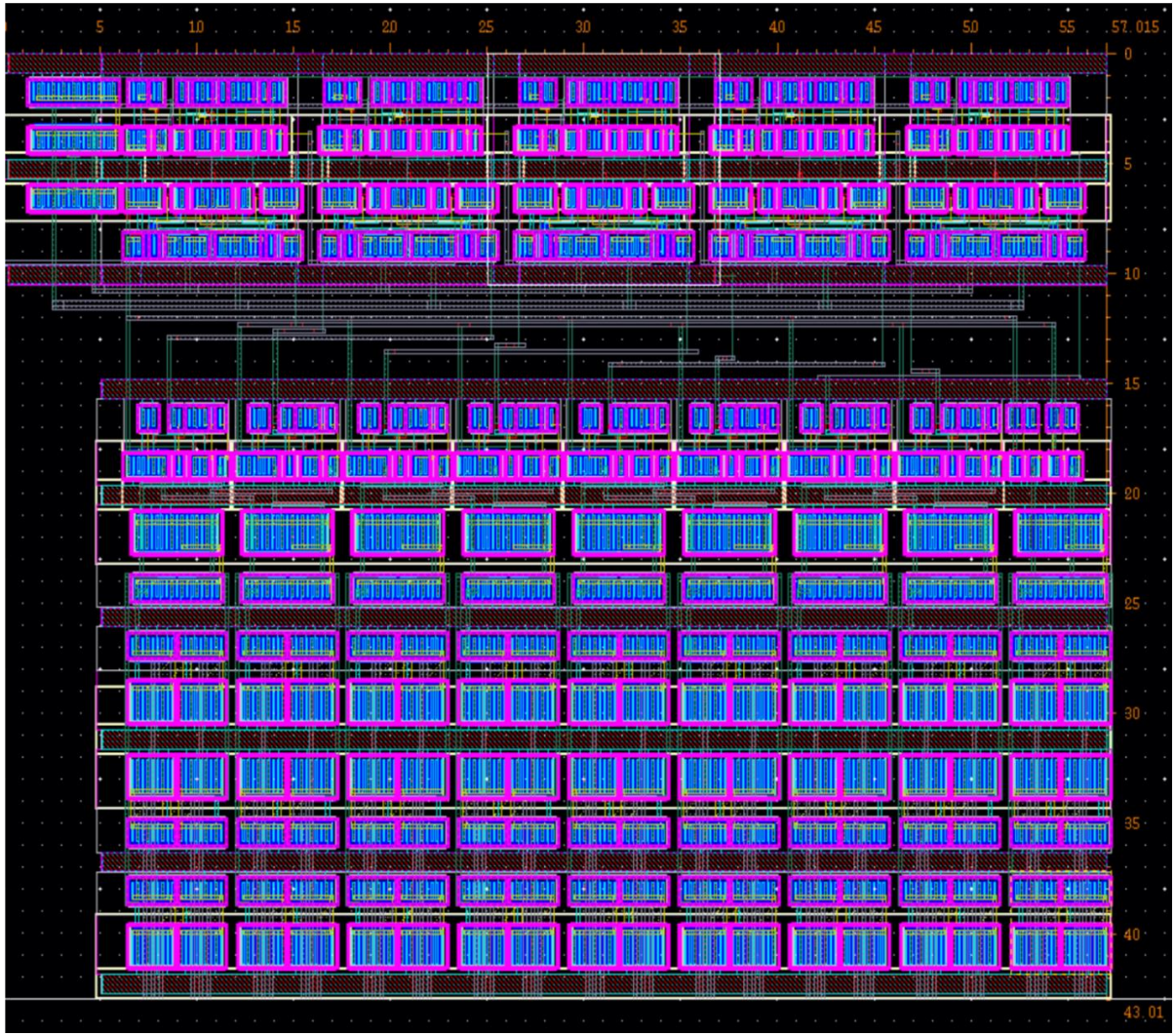

2nd stage SAR Logic

Area	109um*11um

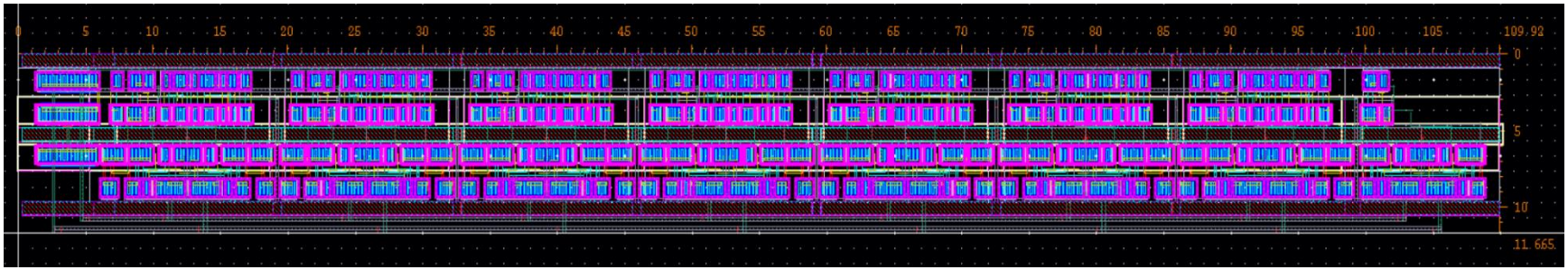

CLK_GEN

Area	39um*13um

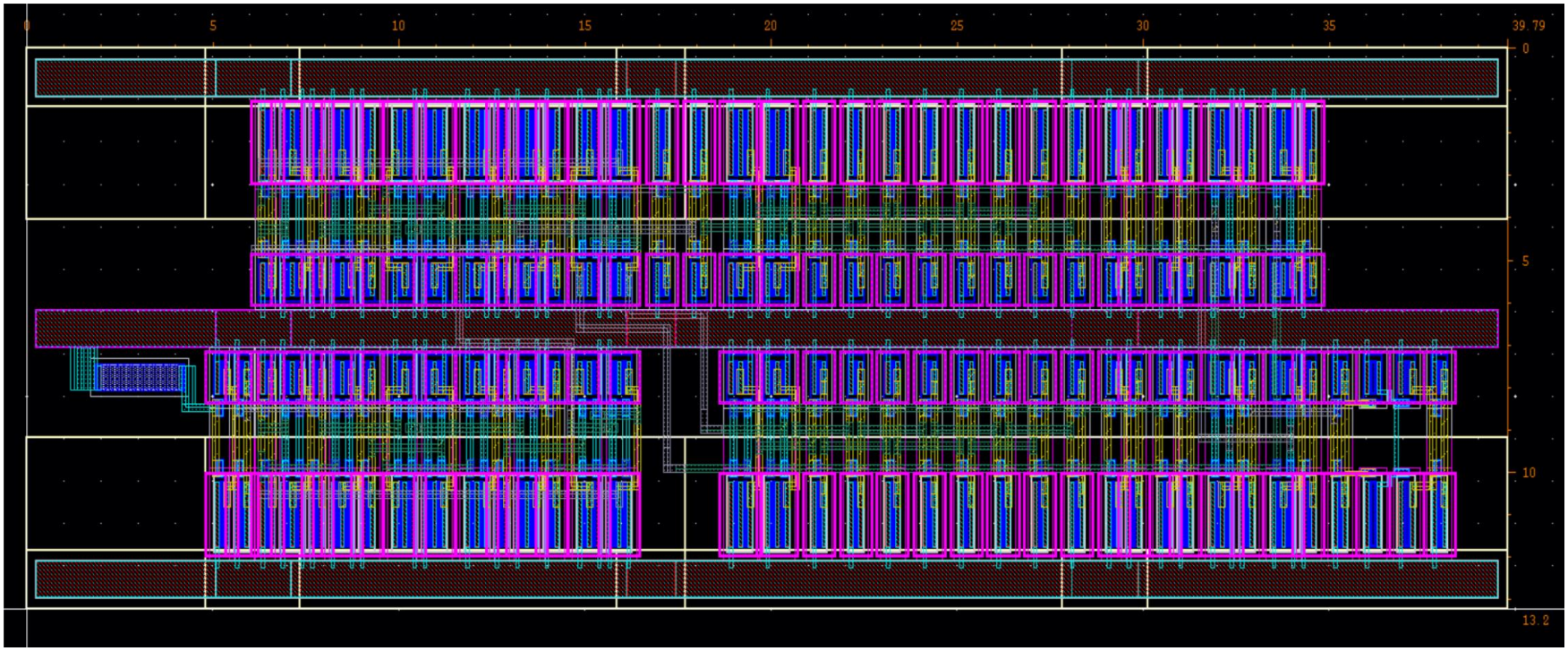

Amplifier(not finished)

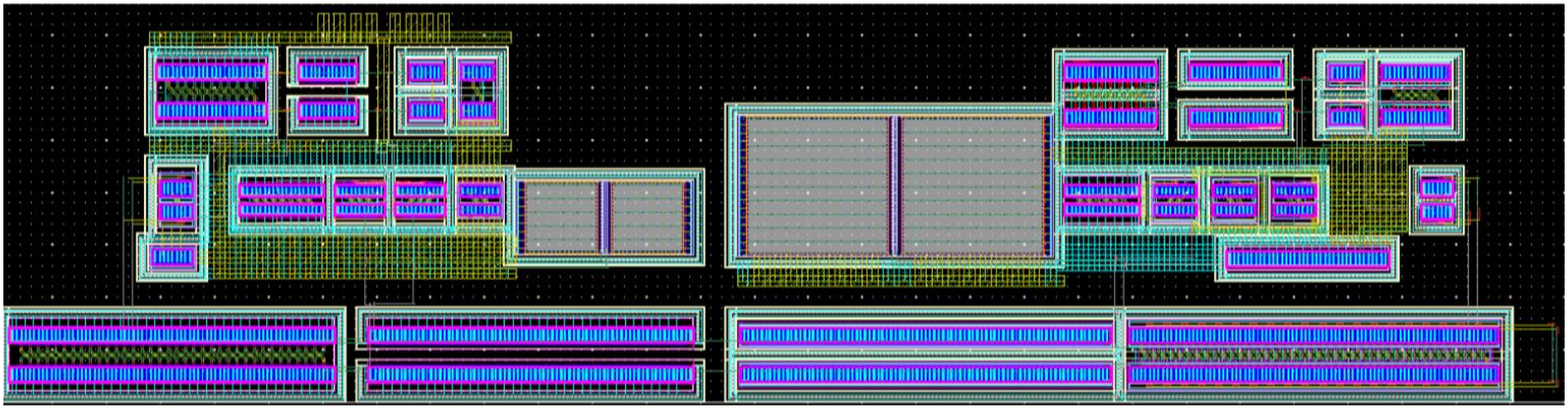

Schedule

Now~2/28	March
1st Sar Logic 2nd Sar Logic CLK_GEN Comparator Amplifier Bootstrap SW DAC	Whole Chip routing & post-sim

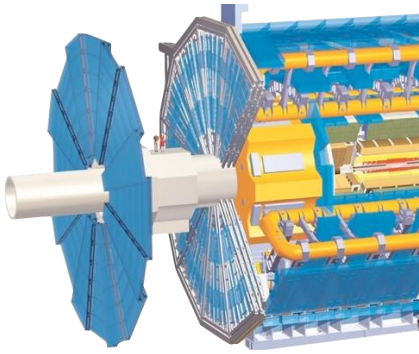

UT-Austin ADC Design ATLAS LAr Calorimeter at HL-LHC

Chen-Kai Hsu

ckhsu@utexas.edu

Jan 27, 2017

High Level review

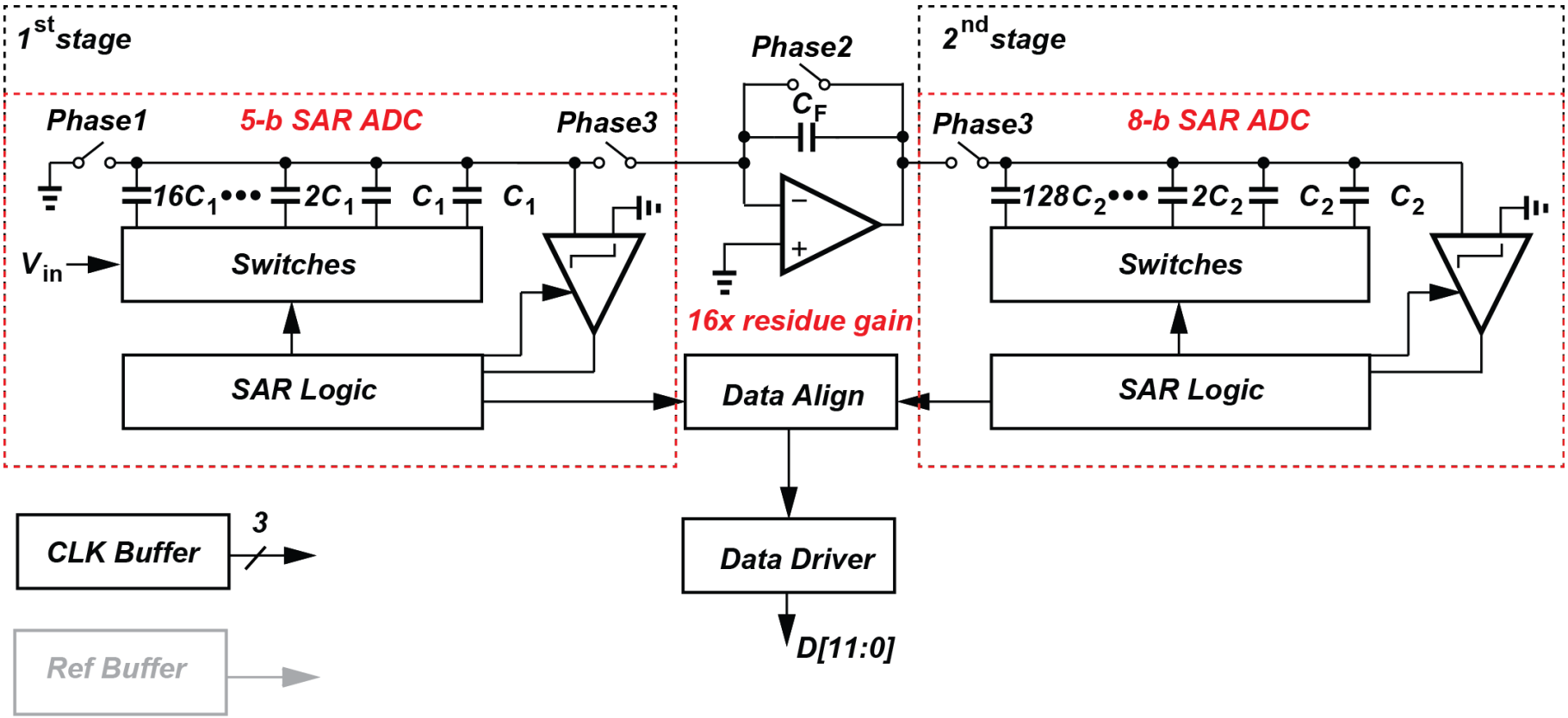

ADC AND OPAMP Review

This ADC	Specification	OPAMP	Specification
Supply Voltage	1.2 V	Supply Voltage	1.2 V
Technology	TSMC 65LP	Technology	TSMC 65LP
Sampling Rate	40MS/s	DC Gain	87 dB
ENOB	11.66 bit	GBW	2.1 GHz
Power	4mW (no Ref Buffer)	Phase Margin	80 degree
Input capacitance	2pF single ended	Power	1.8 mW

schedule

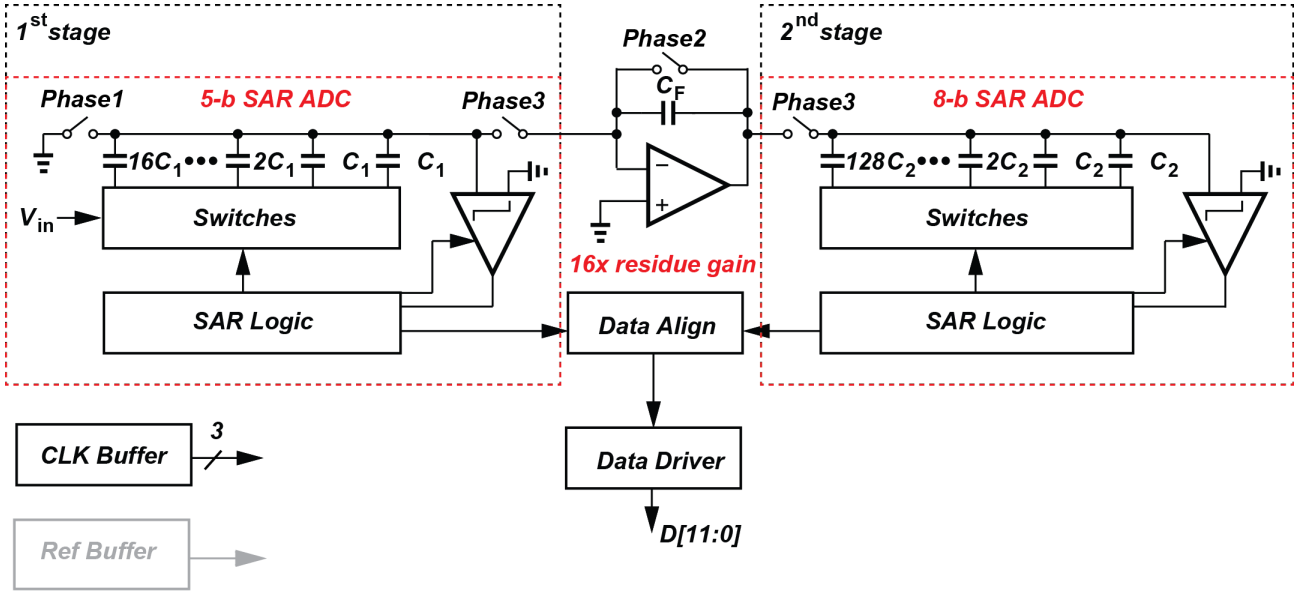

	Now~2/26	2/26~3/26	3/26~4/26
Layout	Stage1 OPAMP	Stage 2 Clk buffer	Whole Chip
verification	presim(ADC) Stage1	stage2 with stage1	Whole Chip

Clock Buffer

- In this ADC, three kinds of clock are used.

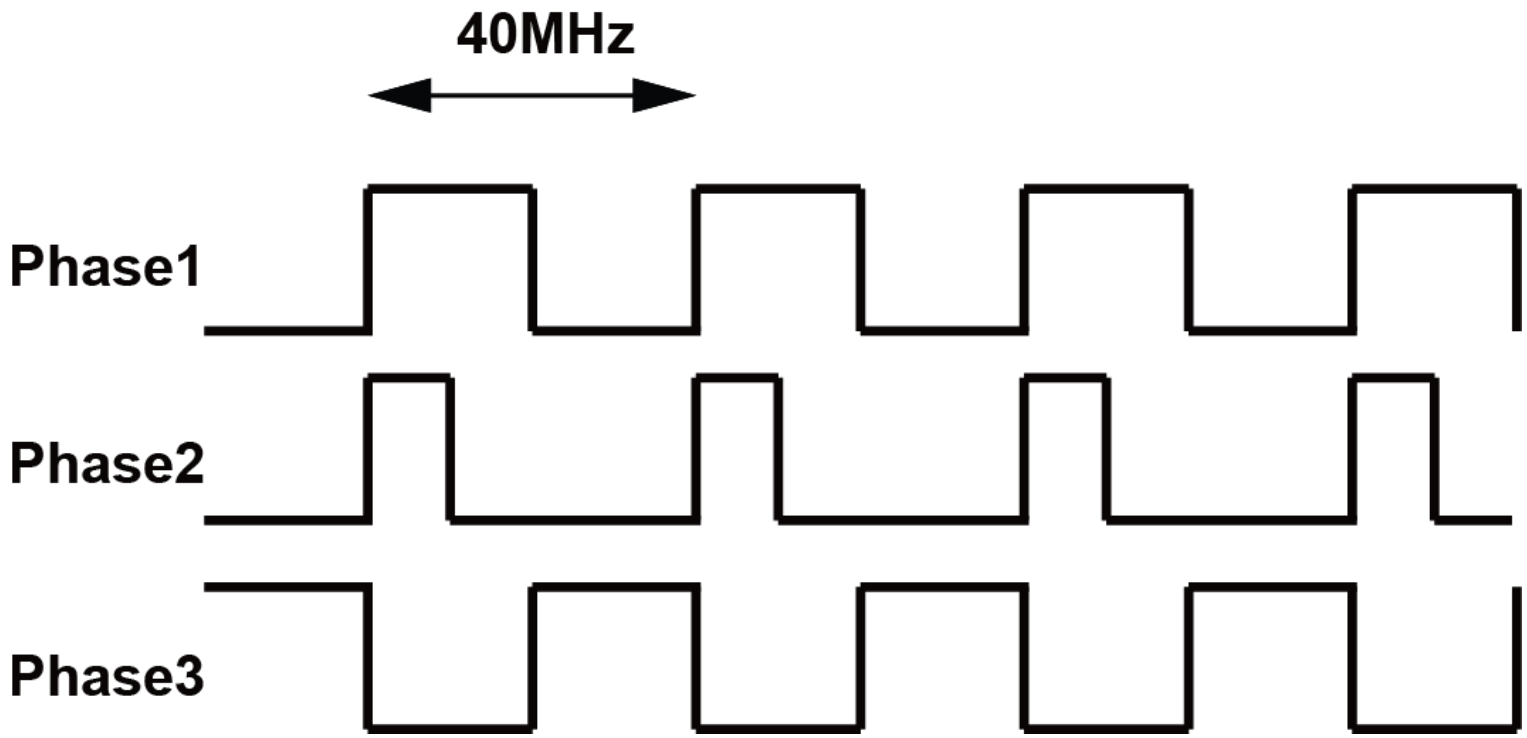

Clock Buffer

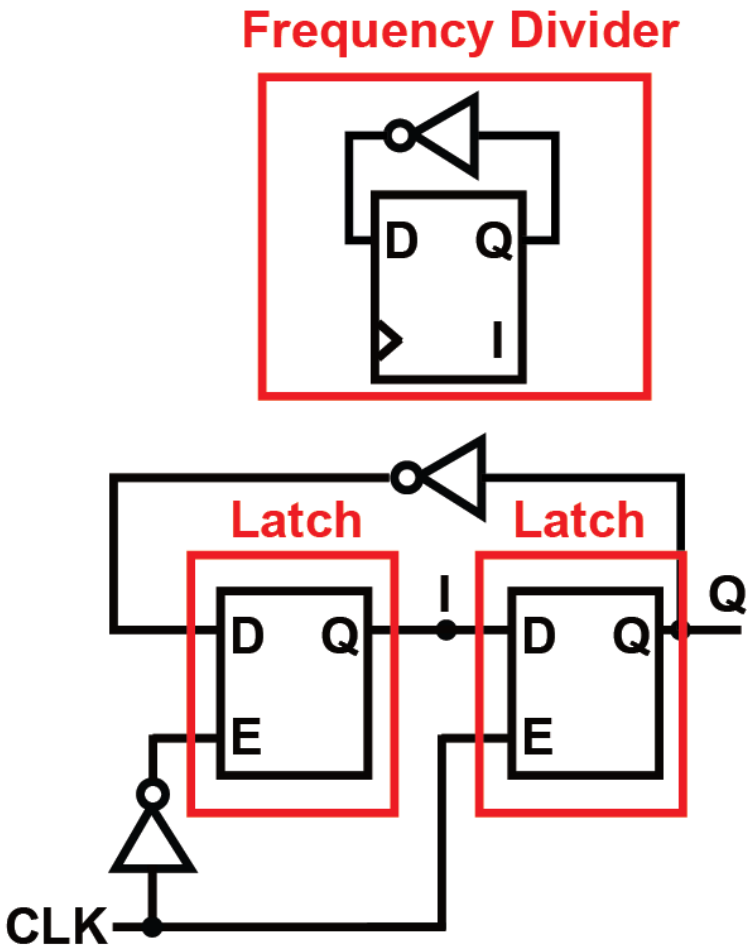

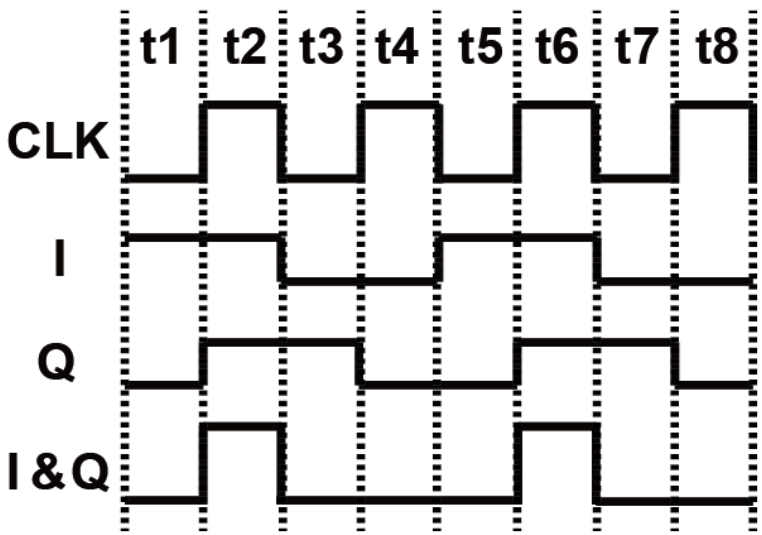

Frequency Divider

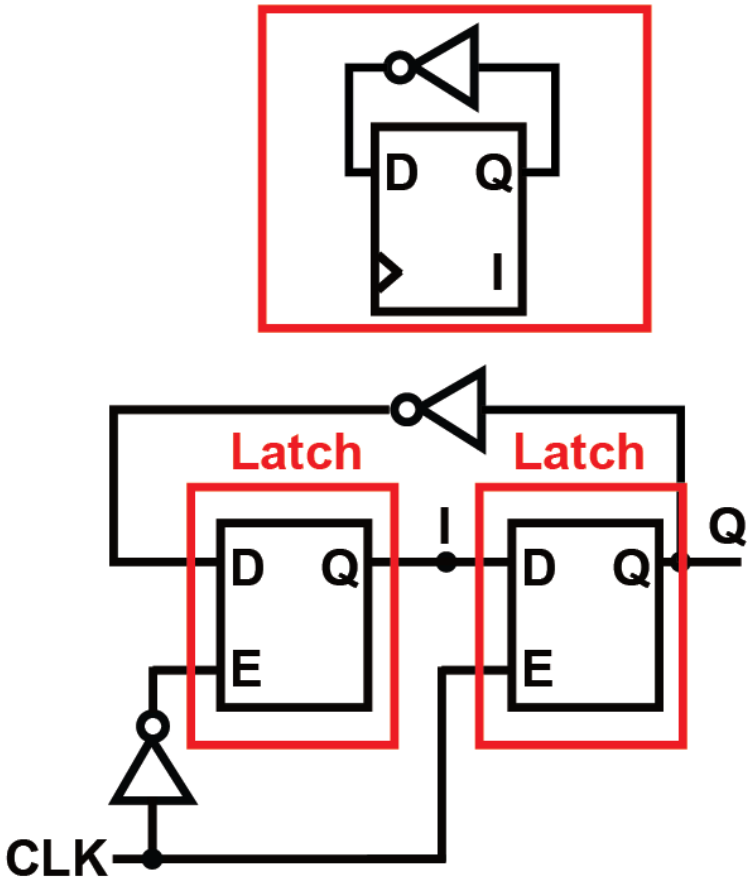

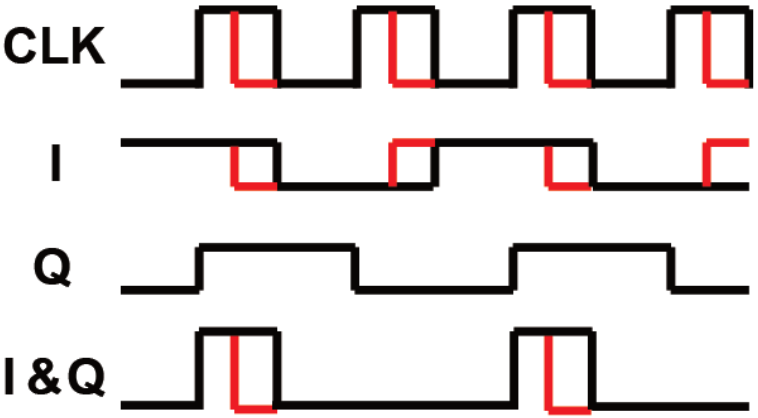

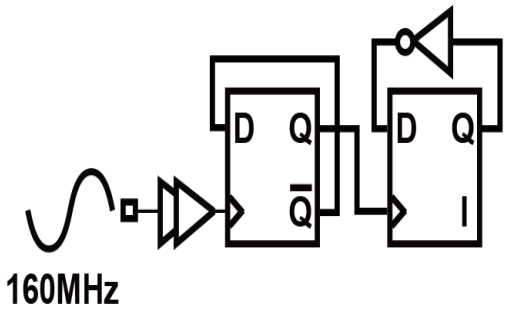
D
Q
Q̄
D
Q
I
160MHz

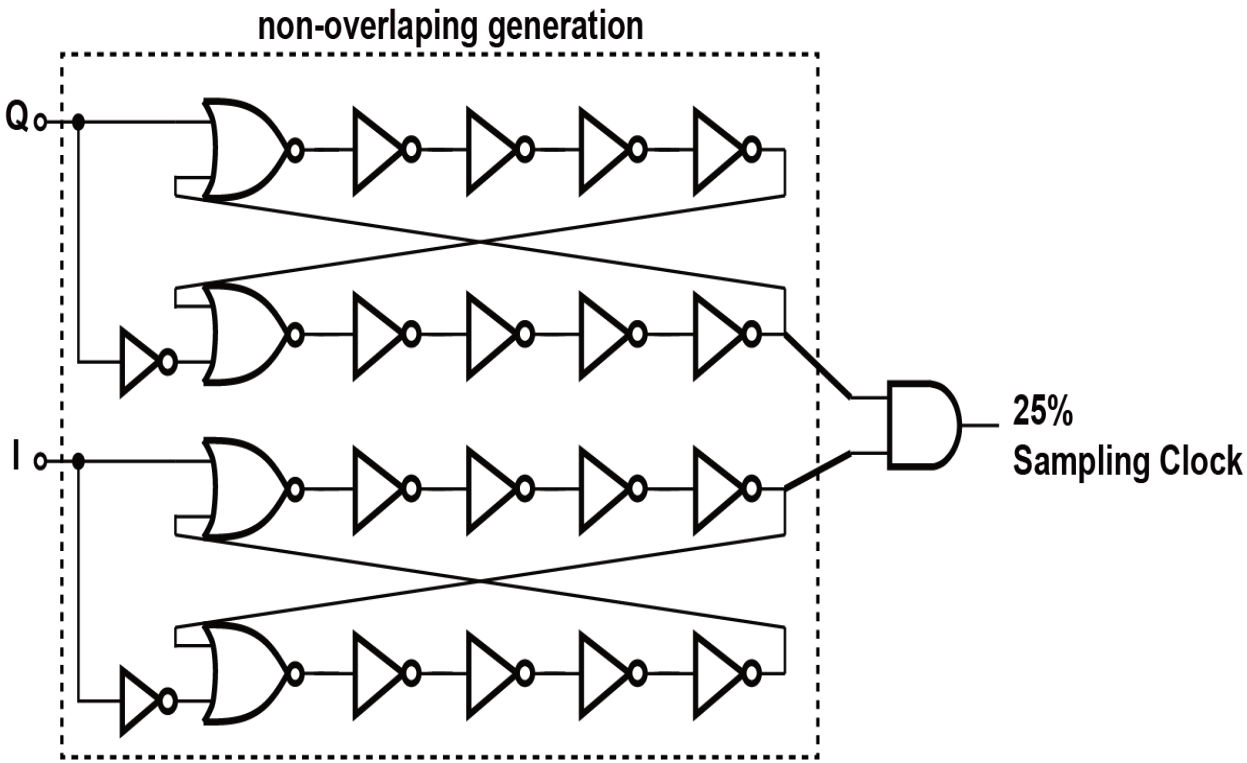
non-overlaping generation
Q
I
25%
Sampling Clock

Bonding wire simulation

Bond Wire Model

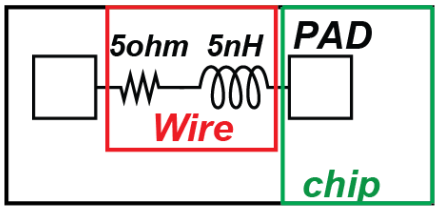

For Reference Voltage

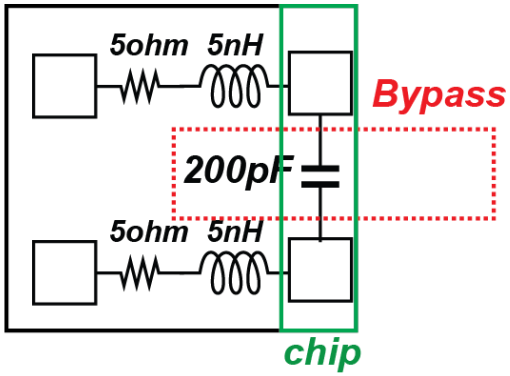

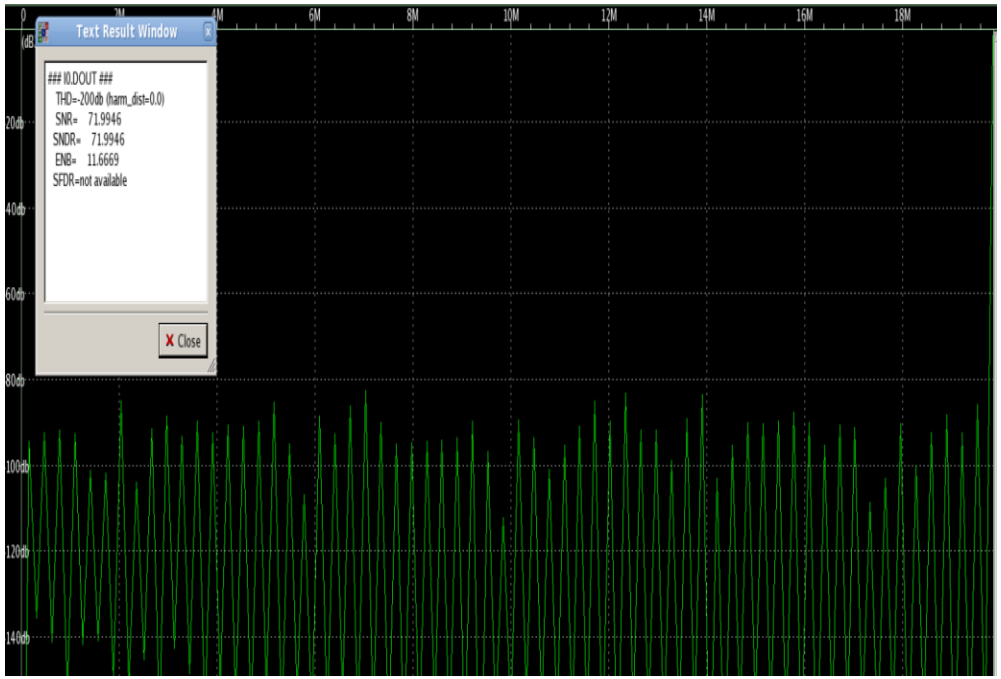

Tapeout date?

Gustaff	John	Estimated Chip Back
	February 01	
February 15		
	February 22	
	April 05	
	April 26	July 12
May 25	May 25	August 16

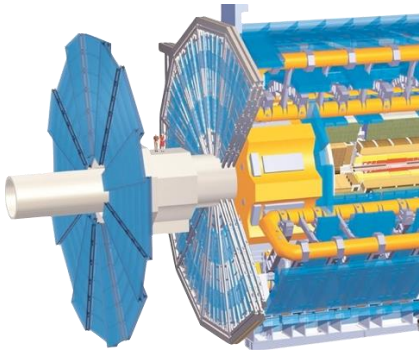

UT-Austin ADC Design ATLAS LAr Calorimeter at HL-LHC

Chen-Kai Hsu

ckhsu@utexas.edu

Dec 20, 2016

Switching back

- Digital Sequence : 100

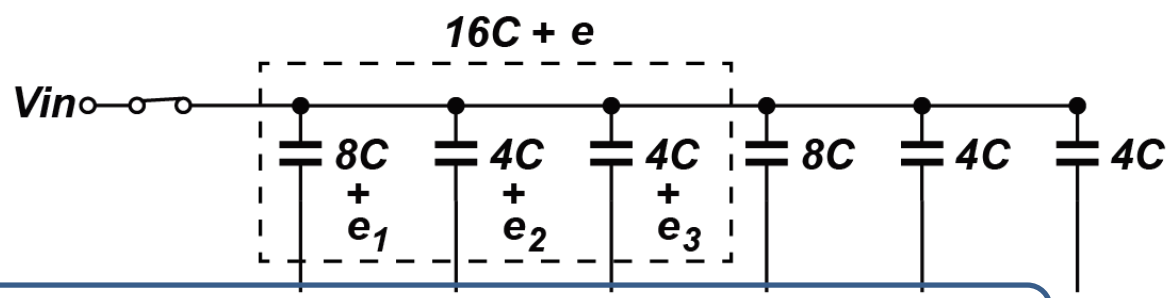

w	RS :	0	0	-vref	0	0
wo	RS :	-vref	-vref	-vref	+vref	+vref

After digitizing Voltage @ bottom

Voltage @ Top plate

w RS : Vin-((16c+e)/(32c+e))*vref+((8c+e1)/(32c+e))*vref+((4c+e2)/(32c+e))*vref

wo RS : Vin-((16c+e)/(32c+e))*vref+((8c)/(32c+e))*vref+((4c)/(32c+e))*vref

- Remember that e equals to e1+e2+e3

Switching back(cont.)

- B5 controls SW9, SW8… SW5 if without switching back.

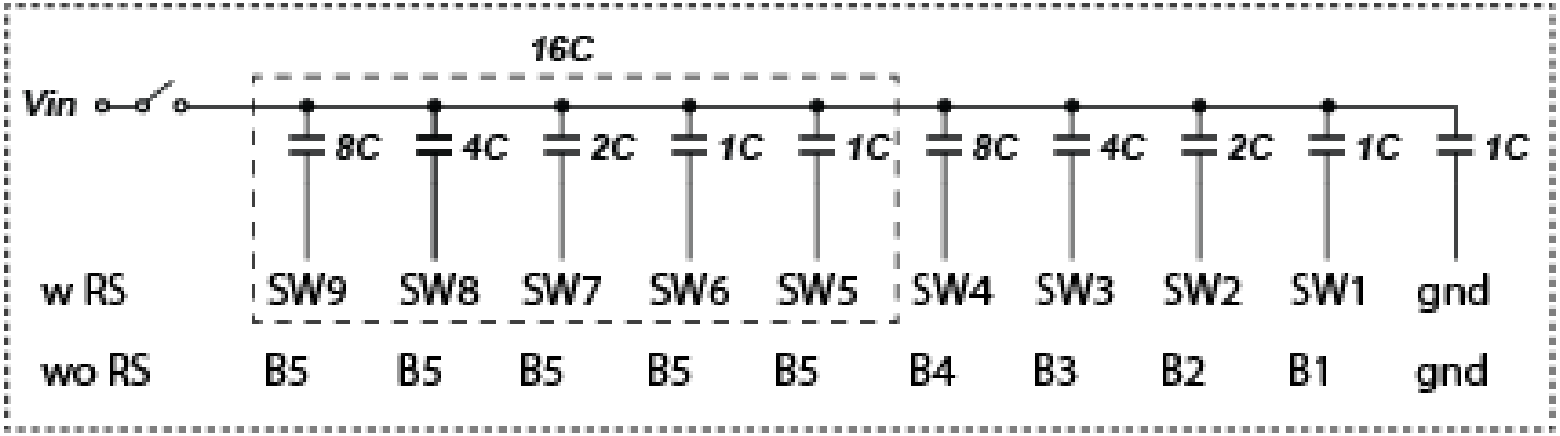

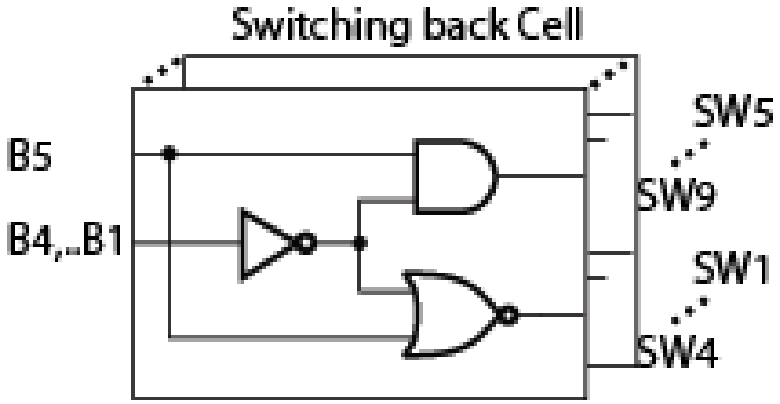

Simulation Result

With Reverse switching

Without Reverse switching

Virtuoso® Analog Design Environment XL Editing: TEST_RS CStage adexl

Launch File Create Tools Options Run EAD Parasitics/LDE Window Help

Basic | No Parasitics/LDE | Monte Carlo Sampling | Reference:

Data View

- Tests
  - TEST_RS:CStage:1
  - Click to add test
- Global Variables
- Parameters
- Corners
- Documents
- Setup States
- Reliability Analyses

adexl | CStage

Outputs Setup | Results | Diagnostics

Yield | Replace

Name	Yield	Min	Target	Max	Mean	Std Dev
timate: 100 %(854 passed/854 pts)	Confidence Level: <not set>	Filter: <not set>				
EST_RS:CStage:1						
spectrum_enob	100	11.61	info	11.99	11.9	61.84m
spectrum_sinad	100	71.63	info	73.32	73.42	372.3m
spectrum_sfdr	100	79.48	info	91.57	87.59	2.623

Virtuoso® Analog Design Environment X

Launch File Create Tools Options Run EAD Parasitics/LDE Window Help

Basic | No Parasitics/LDE | Monte Carlo Sampling | Reference:

Data View

- Tests
  - TEST_RS:CStage_Tradition.
  - Click to add test
- Global Variables
- Parameters
- Corners
- Documents
- Setup States
- Reliability Analyses

adexl | CStage_Traditional

Outputs Setup | Results | Diagnostics

Yield | Replace

Test	Name	Yield	Min	Target	Max	Mean	Std Dev
Yield Estimate: 100 %(1000 passed/1000 pts)	Confidence Level: <not set>	Filter: <not set>					
TEST_RS:CStage_Traditional:1							
	spectrum_enob	100	10.91	info	11.99	11.76	155m
	spectrum_sinad	100	67.47	info	73.93	72.56	533.1m
	spectrum_sfdr	100	72.7	info	91.32	83.54	3.735

Comparator Offset Simulation

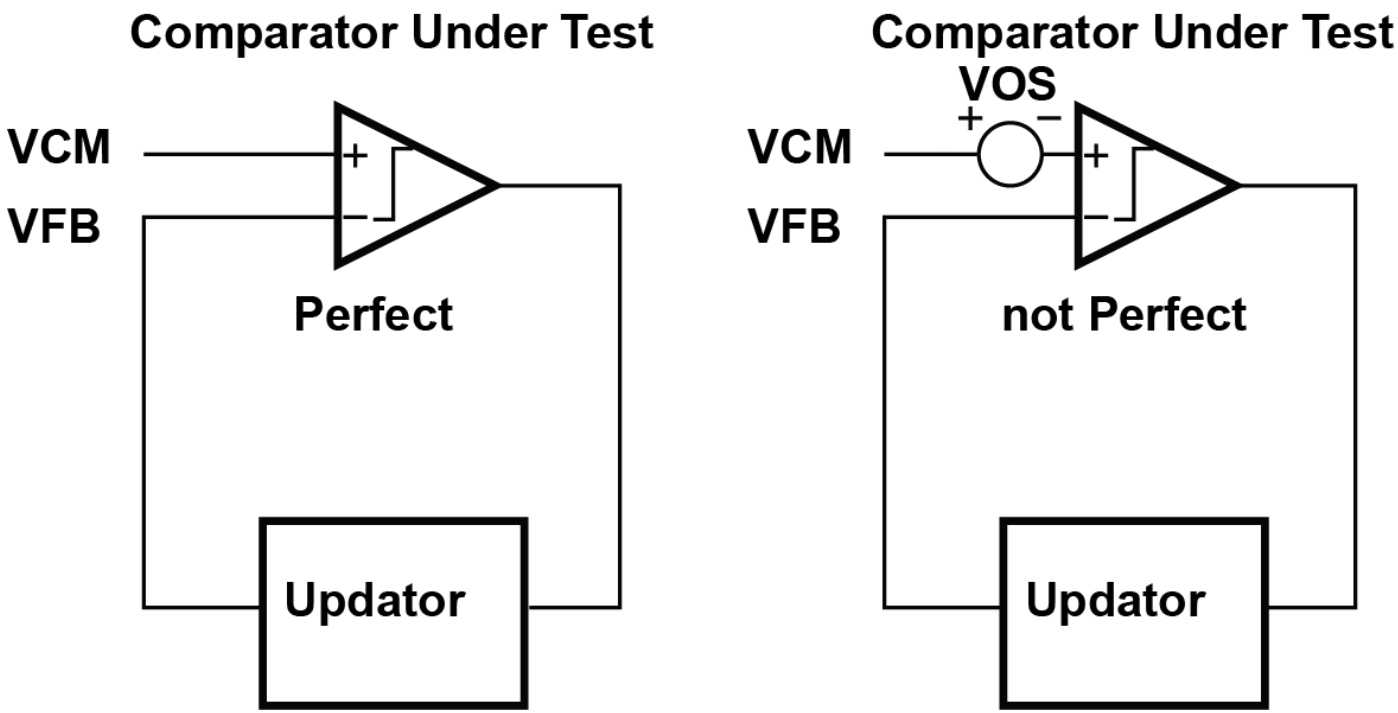

Yield | Replace

Test	Name	Yield	Min	Target	Max	Mean	Std Dev	Cp
Yield Estimate: 100 %(1000 passed/1000 pts)				Confidence Level: <not set>		Filter: <not set>		
– ADC65LP:CLatchOffsetSimulTION:1								
	VOS	100	-15.63m	info		14.31m	326.8u	4.644m

amplifier offset consideration

- Opamp offset canceled out by auto-zero technique.

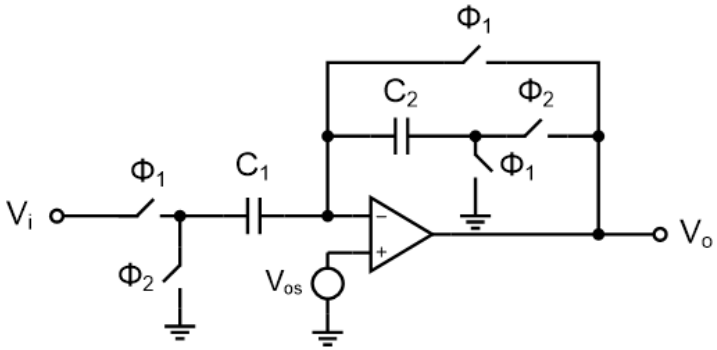

$$\sum Q(\varphi_1) = \left[V_i(n) - V_{os}\right]C_1 - V_{os}C_2 \qquad (1)$$

$$\sum Q(\varphi_2) = -V_{os}C_1 + \left[V_o(n) - V_{os}\right]C_2 \qquad (2)$$

$$\boxed{H(z) = \frac{V_o(z)}{V_i(z)} = \frac{C_1}{C_2}}$$

OPAMP Corner

- Most of corners meet our requirement.

Parameter	C0_0	C0_1	C0_2	C0_3	C0_4	C0_5	C0_6	C0_7
Model Group	TT	TT	TT	TT	TT	TT	TT	TT
VDD	1.08	1.08	1.08	1.2	1.2	1.2	1.32	1.32
temperature	-20	27	80	-20	27	80	-20	27

Output	C0_0	C0_1	C0_2	C0_3	C0_4	C0_5	C0_6	C0_7
gbw	3.291G	2.83G	2.425G	3.408G	3.015G	2.643G	3.53G	3.151G
gain	81.96	81.32	75.74	90.93	88	82.83	93.39	88.32

C0_27	C0_28	C0_29	C0_30	C0_31	C0_32	C0_33	C0_34	C0_35
FS	FS	FS	FS	FS	FS	FS	FS	FS
1.08	1.08	1.08	1.2	1.2	1.2	1.32	1.32	1.32
-20	27	80	-20	27	80	-20	27	80

1.08
Parameter: VDD

C0_27	C0_28	C0_29	C0_30	C0_31	C0_32	C0_33	C0_34	C0_35
3.12G	2.769G	2.274G	3.427G	2.921G	2.5G	3.501G	3.055G	2.658G
33.79	81.93	72.95	88.2	85.28	79.84	90.86	85.73	81.03

Parameter	C0_18	C0_19	C0_20	C0_21	C0_22	C0_23	C0_24	C0_25	C0_26
Model Group	SS	SS	SS	SS	SS	SS	SS	SS	SS
VDD	1.08	1.08	1.08	1.2	1.2	1.2	1.32	1.32	1.32
temperature	-20	27	80	-20	27	80	-20	27	80

Output	C0_18	C0_19	C0_20	C0_21	C0_22	C0_23	C0_24	C0_25	C0_26
	3.084G	2.878G	2.329G	3.055G	3.023G	2.604G	3.213G	3.147G	2.742G
gbw	33.75	81.55	76.65	53.99	90.9	85.98	61.82	92.34	86.83
gain									

C0_36	C0_37	C0_38	C0_39	C0_40	C0_41	C0_42	C0_43	C0_44
SF	SF	SF	SF	SF	SF	SF	SF	SF
1.08	1.08	1.08	1.2	1.2	1.2	1.32	1.32	1.32
-20	27	80	-20	27	80	-20	27	80

C0_36	C0_37	C0_38	C0_39	C0_40	C0_41	C0_42	C0_43	C0_44
2.901G	2.904G	2.577G	3.016G	3.098G	2.763G	3.244G	3.24G	2.899G
36.44	79.3	76.38	32.43	88.03	84.2	64.74	89.4	84.92

Parameter	C0_9	C0_10	C0_11	C0_12	C0_13	C0_14	C0_15	C0_16	C0_17
Model Group	FF	FF	FF	FF	FF	FF	FF	FF	FF
VDD	1.08	1.08	1.08	1.2	1.2	1.2	1.32	1.32	1.32
temperature	-20	27	80	-20	27	80	-20	27	80

Output	C0_9	C0_10	C0_11	C0_12	C0_13	C0_14	C0_15	C0_16	C0_17
	3.226G	2.835G	2.482G	3.395G	3.026G	2.675G	3.535G	3.175G	2.823G
gbw	83.5	79.3	70.98	88.59	83.34	77.66	88.83	84.09	78.85
gain									

OPAMP Corner

- N_Aux_Amp: N mos input folded cascade
- P_Aux_Amp: P mos input folded cascode

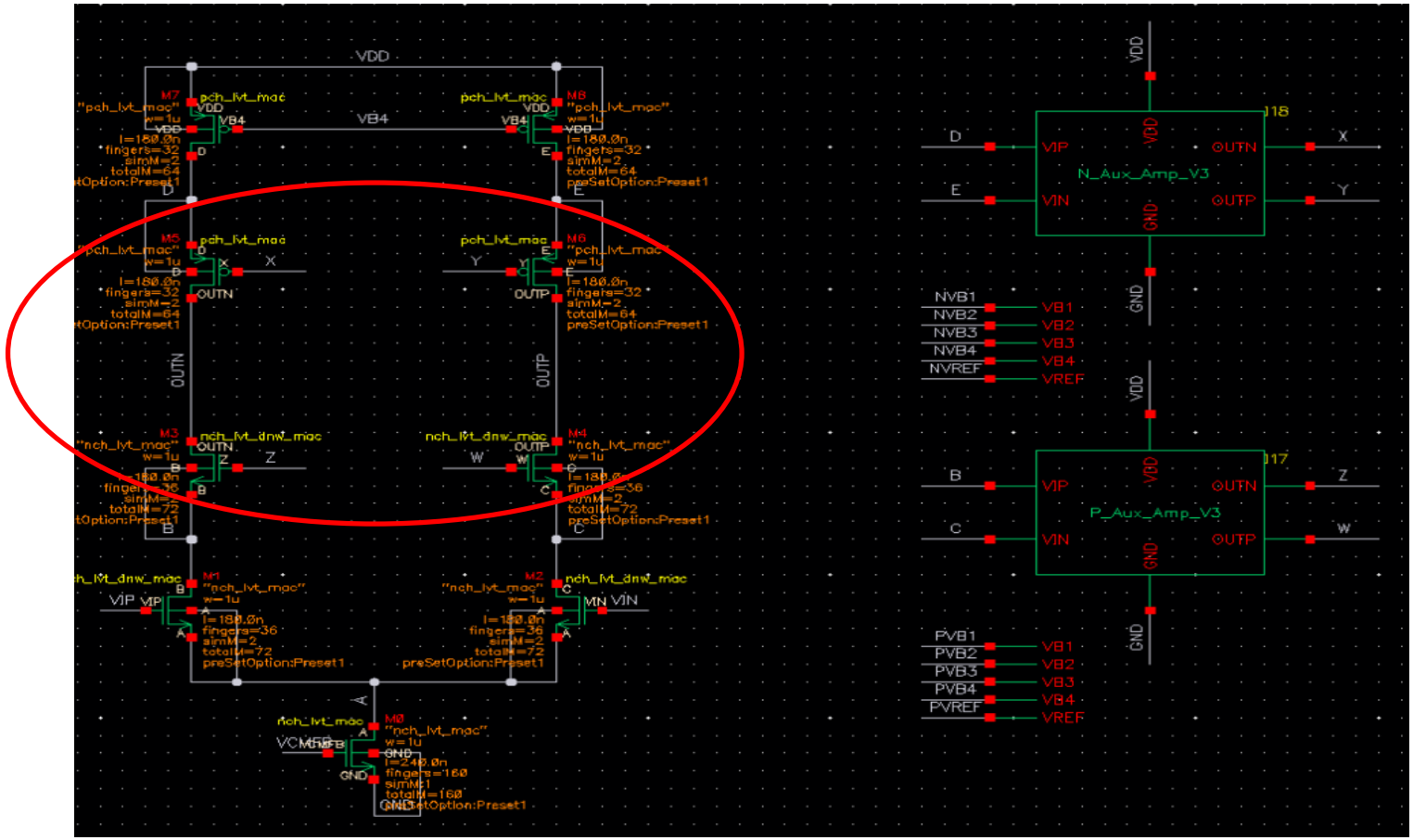

OPAMP Corner

- P_Aux_Amp: P mos input folded cascode

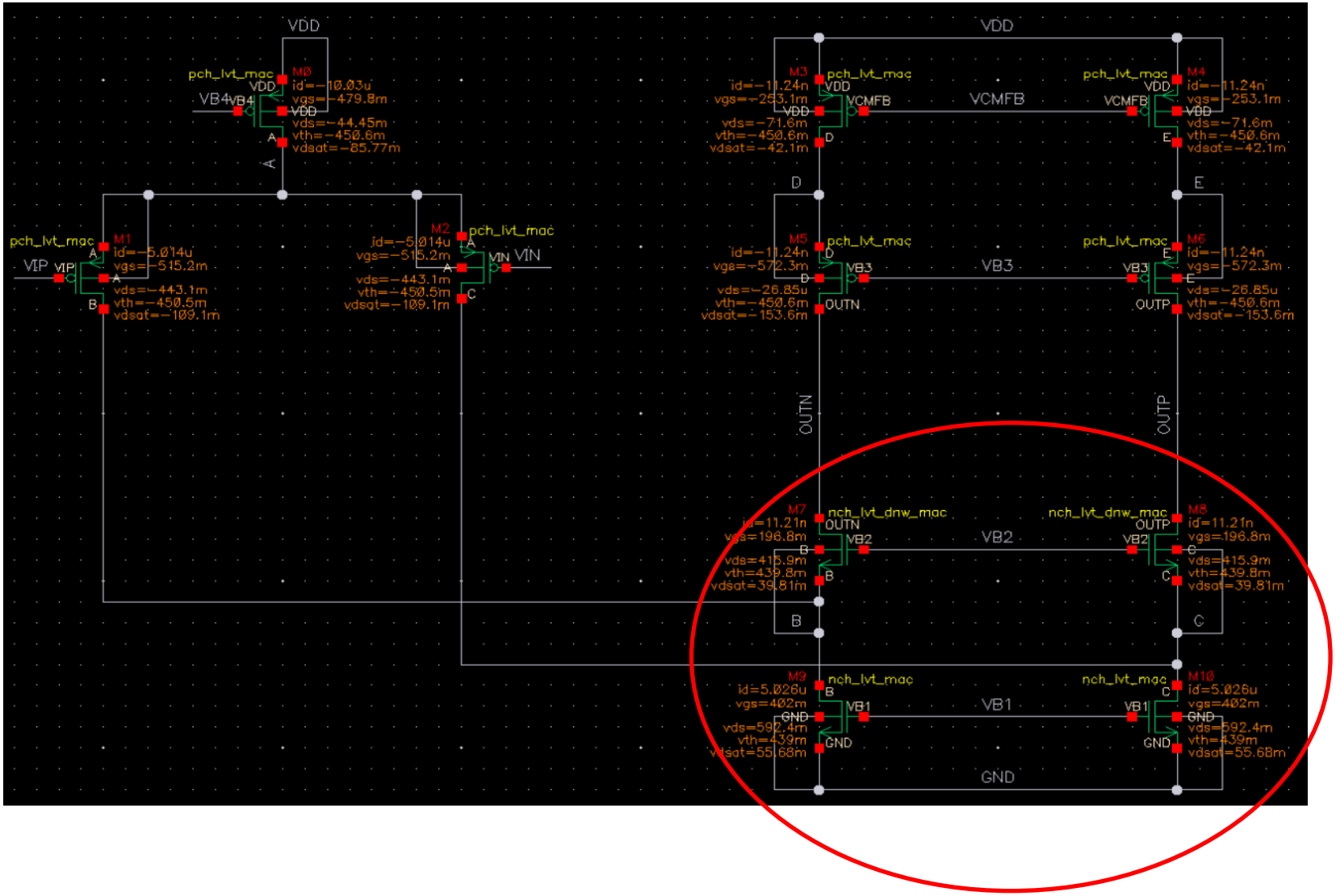

Amplifier Corner simulation

C0_0	C0_1	C0_2	C0_3	C0_4	C0_5	C0_6	C0_7	C0_8
TT	TT	TT	TT	TT	TT	TT	TT	TT
1.08	1.08	1.08	1.2	1.2	1.2	1.32	1.32	1.32
-20	27	80	-20	27	80	-20	27	80

C0_0	C0_1	C0_2	C0_3	C0_4	C0_5	C0_6	C0_7	C0_8
2.363G	2.227G	2.121G	3.167G	2.897G	2.625G	3.698G	3.424G	3.139G
87.33	84.37	75.49	89.79	88.19	83.13	90.84	89.08	82.93

C0_9	C0_10	C0_11	C0_12	C0_13	C0_14	C0_15	C0_16	C0_17
FF	FF	FF	FF	FF	FF	FF	FF	FF
1.08	1.08	1.08	1.2	1.2	1.2	1.32	1.32	1.32
-20	27	80	-20	27	80	-20	27	80

C0_9	C0_10	C0_11	C0_12	C0_13	C0_14	C0_15	C0_16	C0_17
2.584G	2.313G	2.19G	3.405G	3.129G	2.858G	3.894G	3.622G	3.344G
84.16	80.91	72.6	87.91	86.09	80.81	89.23	87.18	80.04

C0_18	C0_19	C0_20	C0_21	C0_22	C0_23	C0_24	C0_25	C0_26
SS	SS	SS	SS	SS	SS	SS	SS	SS
1.08	1.08	1.08	1.2	1.2	1.2	1.32	1.32	1.32
-20	27	80	-20	27	80	-20	27	80

C0_18	C0_19	C0_20	C0_21	C0_22	C0_23	C0_24	C0_25	C0_26
2.193G	2.11G	2.012G	2.888G	2.618G	2.347G	3.479G	3.201G	2.914G
88.69	85.82	76.65	90.89	89.36	83.82	91.96	90.39	85.01

C0_36	C0_37	C0_38	C0_39	C0_40	C0_41	C0_42	C0_43	C0_44
SF	SF	SF	SF	SF	SF	SF	SF	SF
1.08	1.08	1.08	1.2	1.2	1.2	1.32	1.32	1.32
-20	27	80	-20	27	80	-20	27	80

C0_36	C0_37	C0_38	C0_39	C0_40	C0_41	C0_42	C0_43	C0_44
2.589G	2.334G	2.201G	3.296G	3.037G	2.77G	3.785G	3.521G	3.222G
87.84	82.56	73.57	90.19	87.52	78.32	91.06	88.55	77.07

C0_27	C0_28	C0_29	C0_30	C0_31	C0_32	C0_33	C0_34	C0_35
FS	FS	FS	FS	FS	FS	FS	FS	FS
1.08	1.08	1.08	1.2	1.2	1.2	1.32	1.32	1.32
-20	27	80	-20	27	80	-20	27	80

C0_27	C0_28	C0_29	C0_30	C0_31	C0_32	C0_33	C0_34	C0_35
2.053G	2.022G	1.955G	2.972G	2.71G	2.45G	3.6G	3.321G	3.047G
81.32	80.76	74.1	87.78	86.88	83.62	89.97	88.65	84.98

- 45 corner was tested.
- Temperature:{-20,27,80}
- MOS :{TT,SS,FF,SF,FS}
- VDD :0.9VDD,VDD,1.1VDD

TT, 27, 1.2V with transient noise

	Power Consumption
VDD	1.2V
Sample Rates	40MS/s
SNDR	72.46dB = 11.74 bits
Power Consumption	3mW

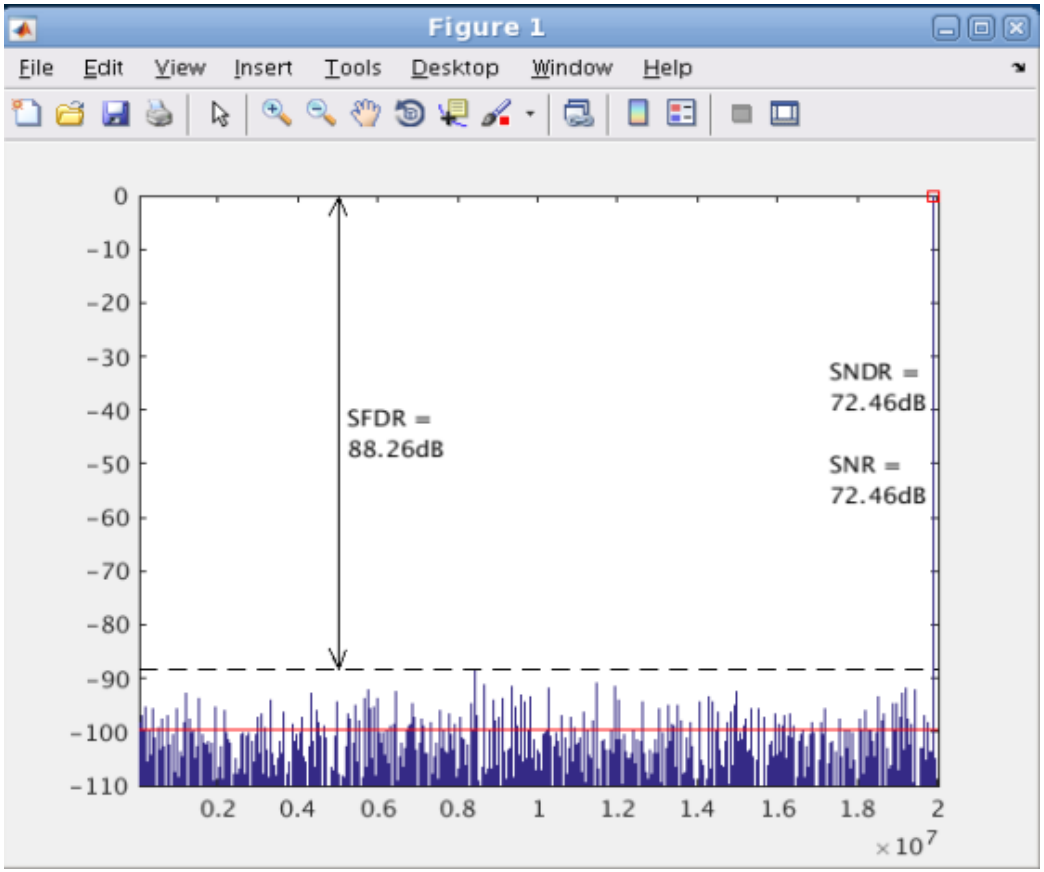

Future Work

- Corner simulation of whole 12-b ADC
- 12-b Pipeline SAR ADC simulation together with bonding wire.
- DAC Array layout.

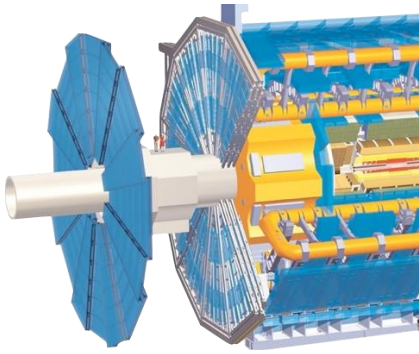

UT-Austin ADC Design ATLAS LAr Calorimeter at HL-LHC

Chen-Kai Hsu

ckhsu@utexas.edu

Nov 22, 2016

Outline

- Capacitor Linearity Enhancement
- Implementation Progress
- Future work

Capacitor Matching Enhancement

- Reversed Switching, RS, [1] JSSCC'15

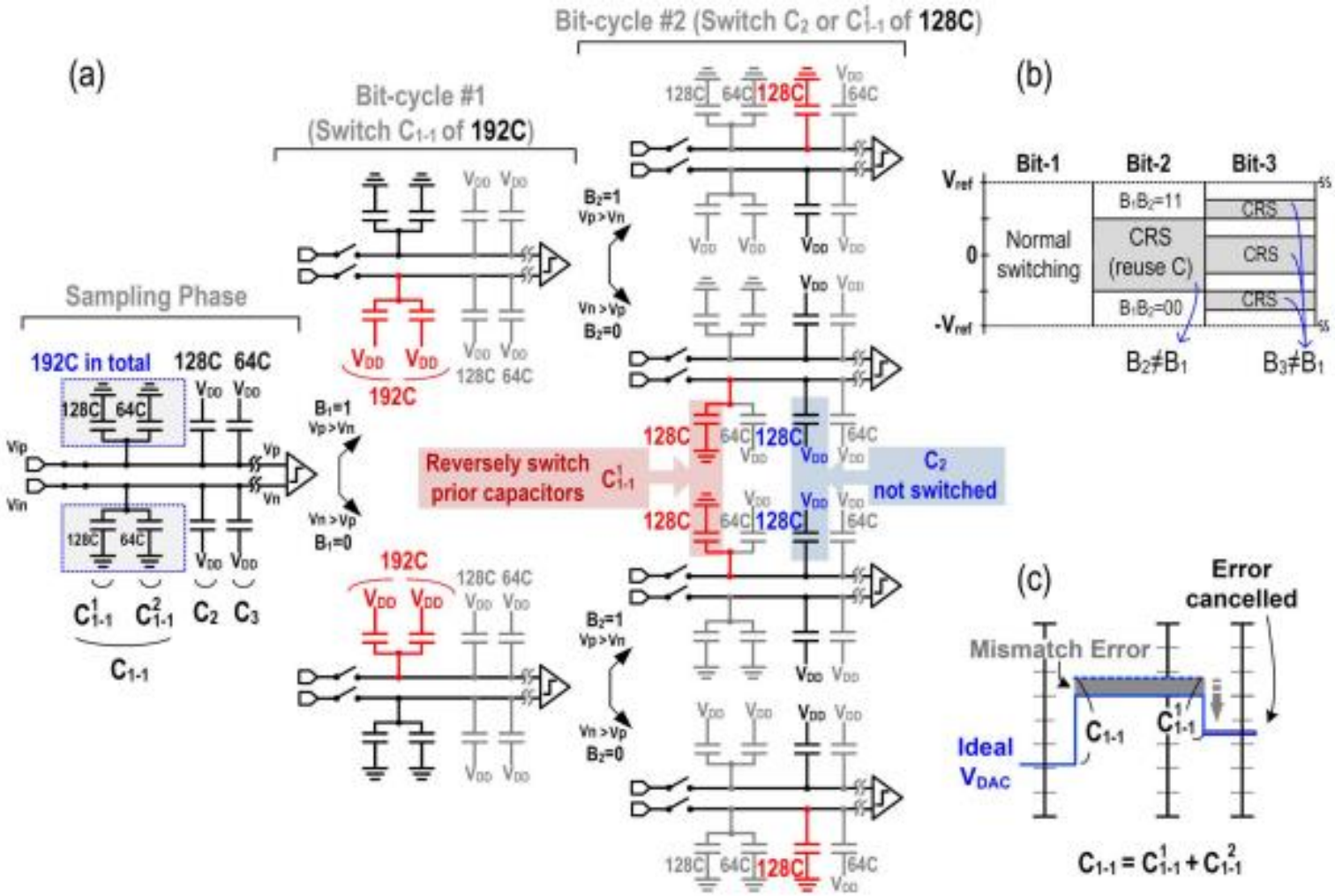

Capacitor Matching Enhancement

- Digital Sequence : 100

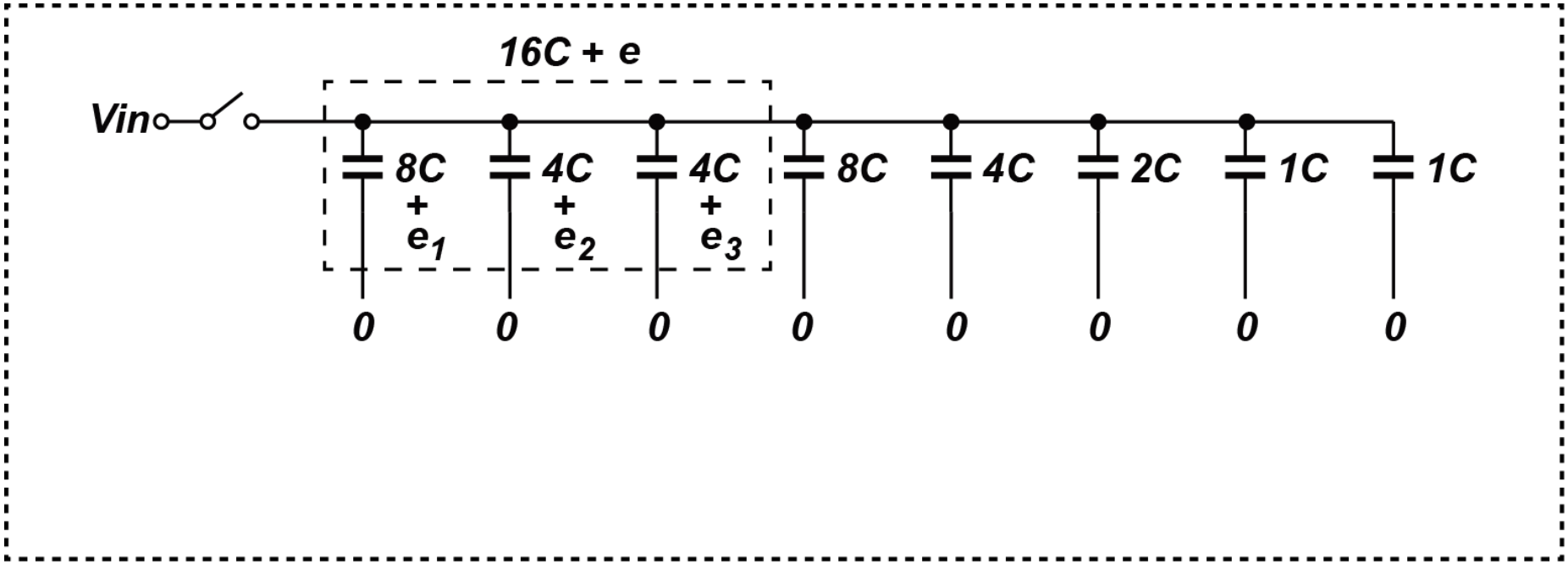

Capacitor Matching Enhancement

- Digital Sequence : 100

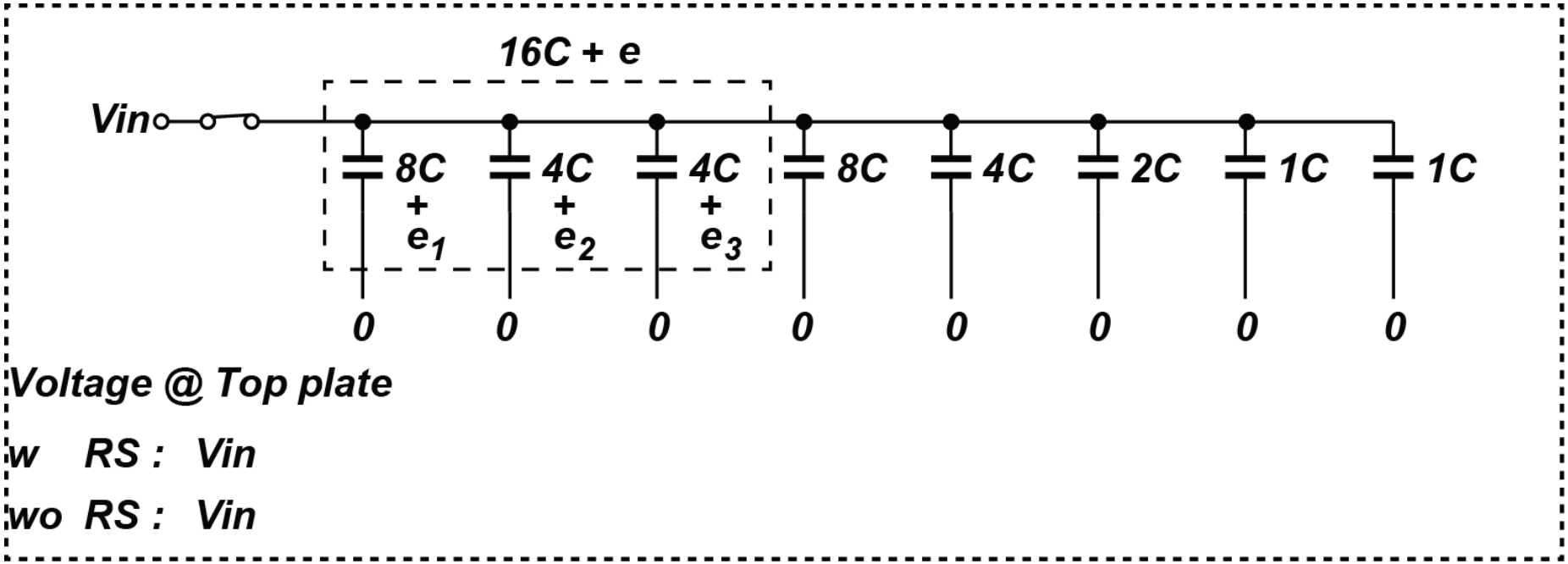

Capacitor Matching Enhancement

- Digital Sequence : 100

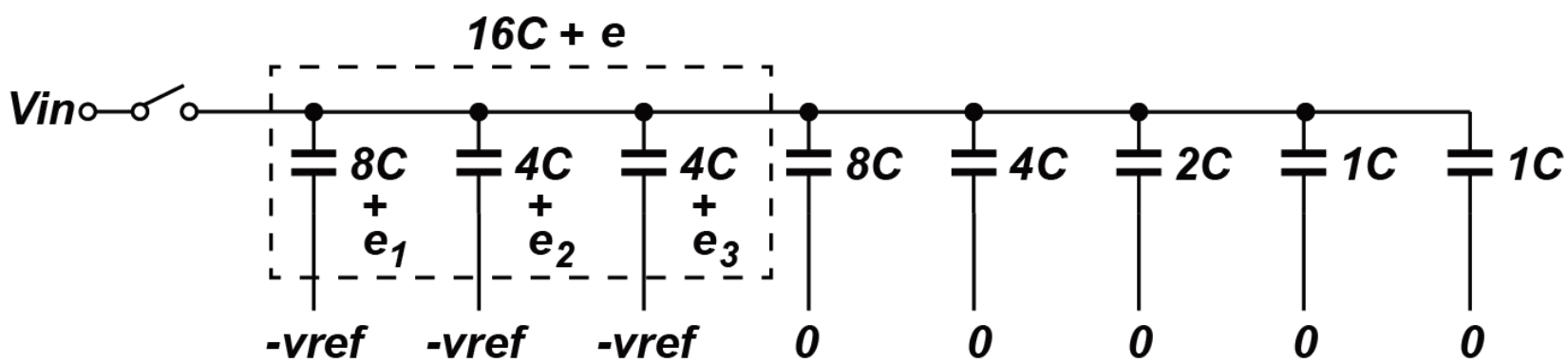

Voltage @ Top plate

*w RS : Vin-((16c+e)/(32c+e))*vref*

*wo RS : Vin-((16c+e)/(32c+e))*vref*

Capacitor Matching Enhancement

- Digital Sequence : 100

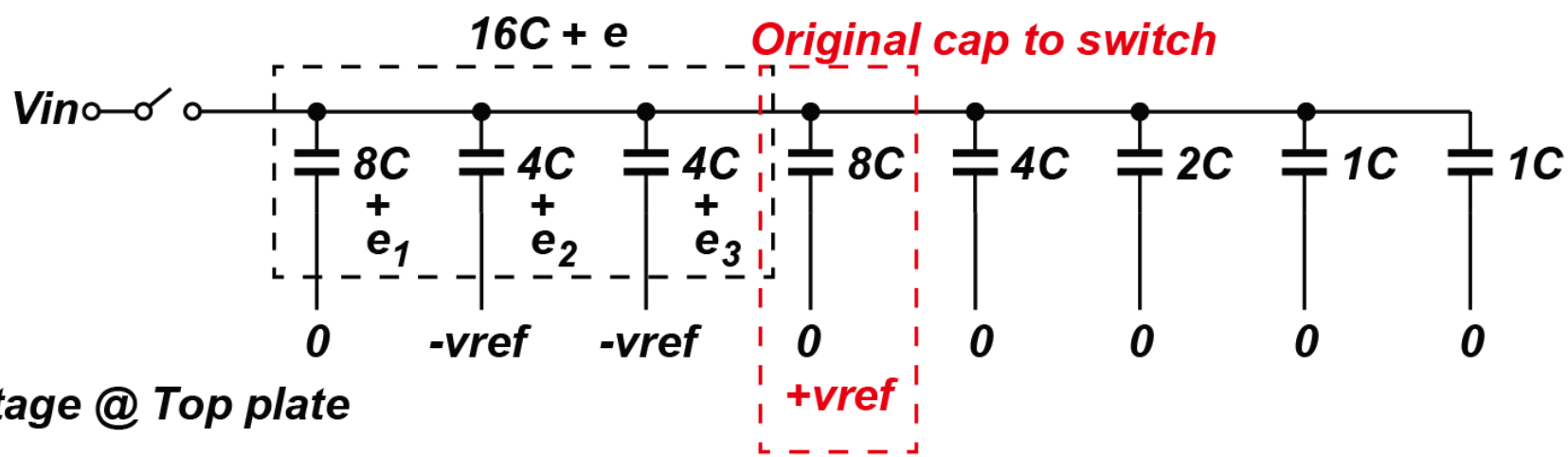

Voltage @ Top plate

w RS : Vin-((16c+e)/(32c+e))*vref+((8c+e1)/(32c+e))*vref

wo RS : Vin-((16c+e)/(32c+e))*vref+((8c)/(32c+e))*vref

Capacitor Matching Enhancement

- Digital Sequence : 100

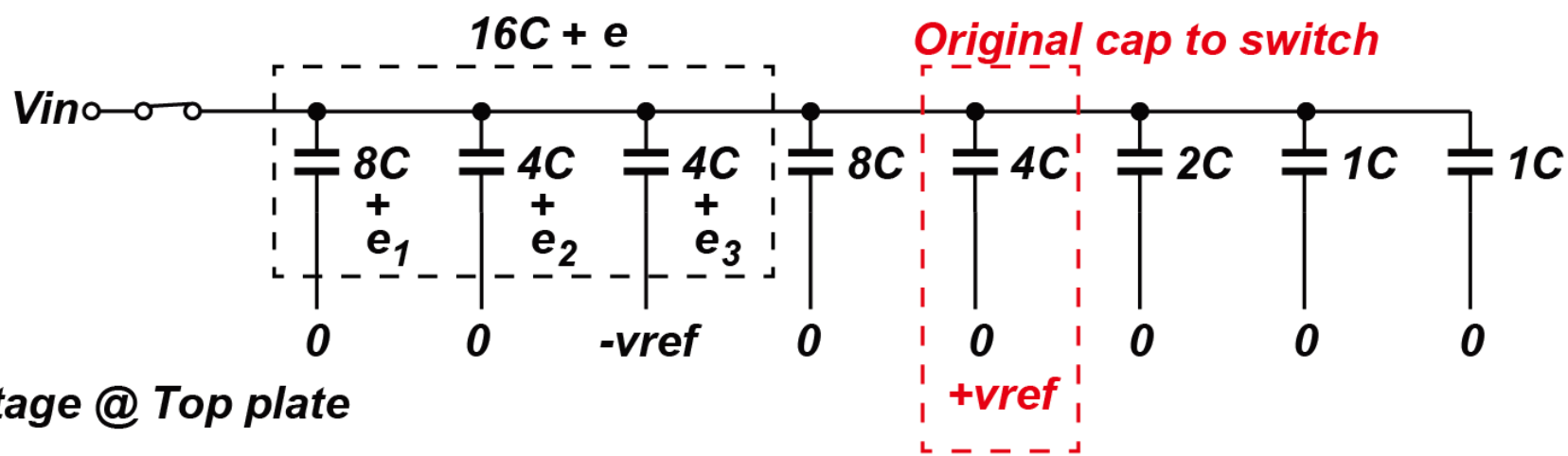

Voltage @ Top plate

w RS : Vin-((16c+e)/(32c+e))*vref+((8c+e1)/(32c+e))*vref+((4c+e2)/(32c+e))*vref

wo RS : Vin-((16c+e)/(32c+e))*vref+((8c)/(32c+e))*vref+((4c)/(32c+e))*vref

- Remember that e equals to e1+e2+e3

Capacitor Matching Enhancement

- Unit capacitor of 200fF in 1st stage.

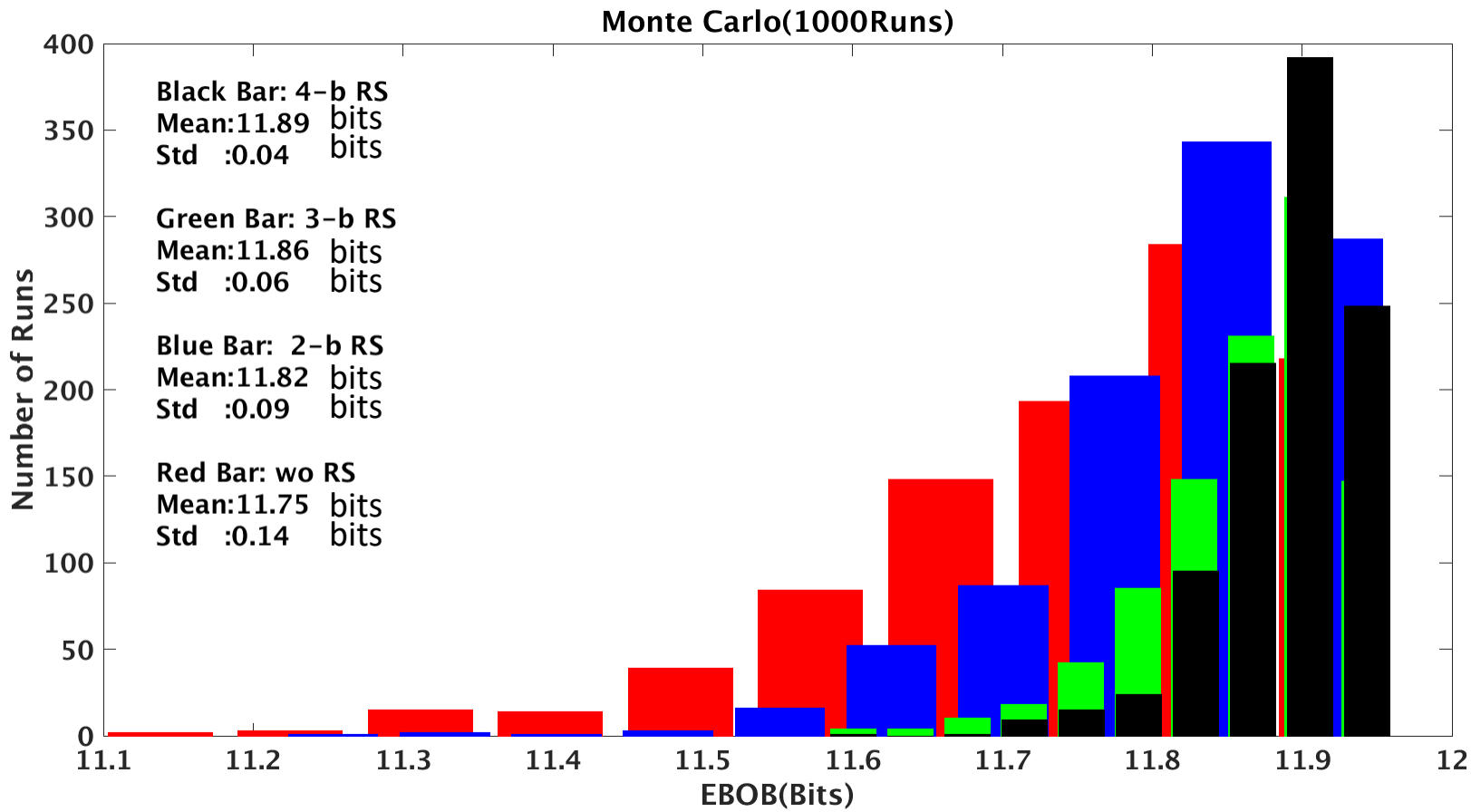

Capacitor Matching Enhancement

- Unit capacitor of 20fF in 1st stage.

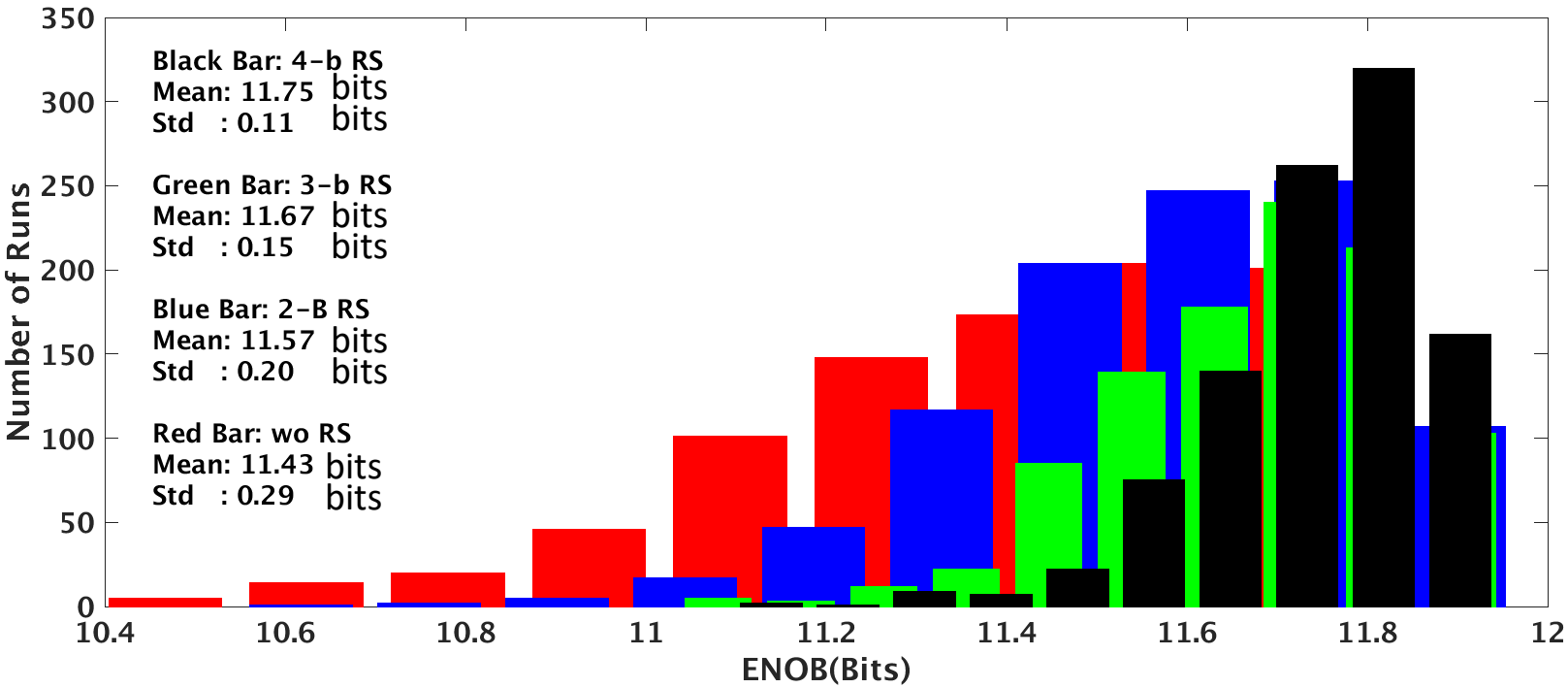

Implementation Progress

- First stage has been built(without RS).

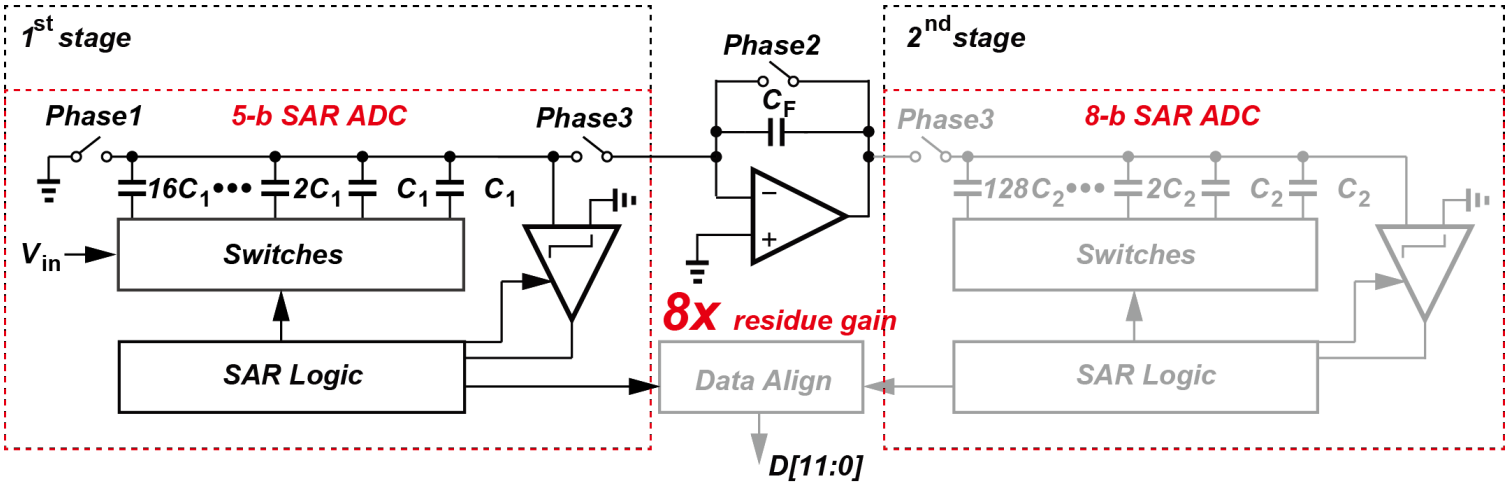

	Power Consumption
OPAMP	1.8mW
1st Comparator	60uW
1st SAR Logic	20uW
Bootstrap Switch	6uW

Implementation Progress

- Feed the residue of amplifier and digital code into Matlab.

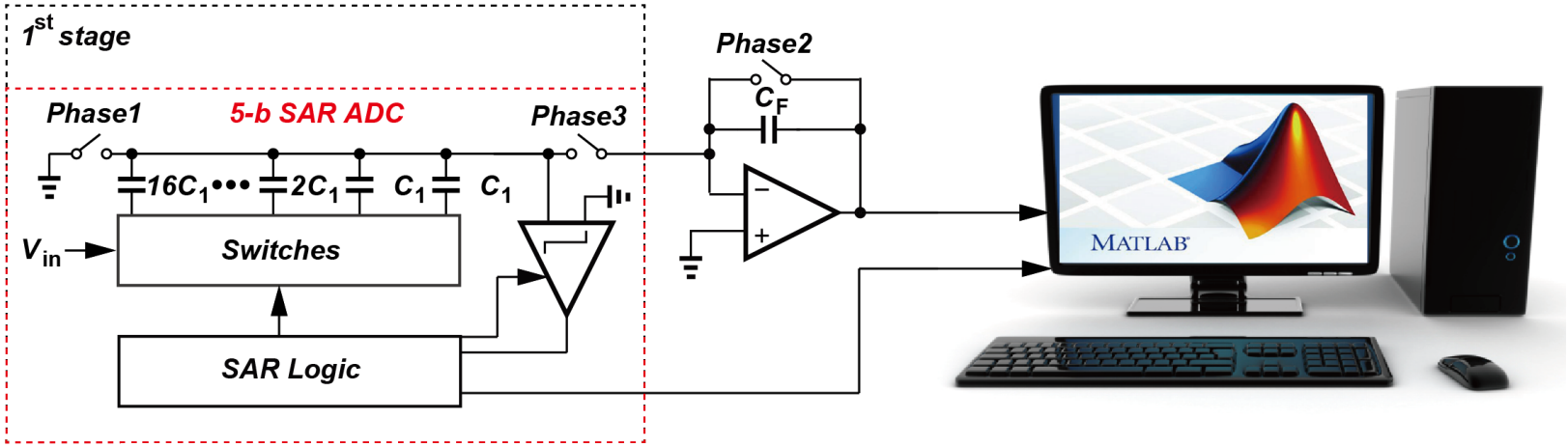

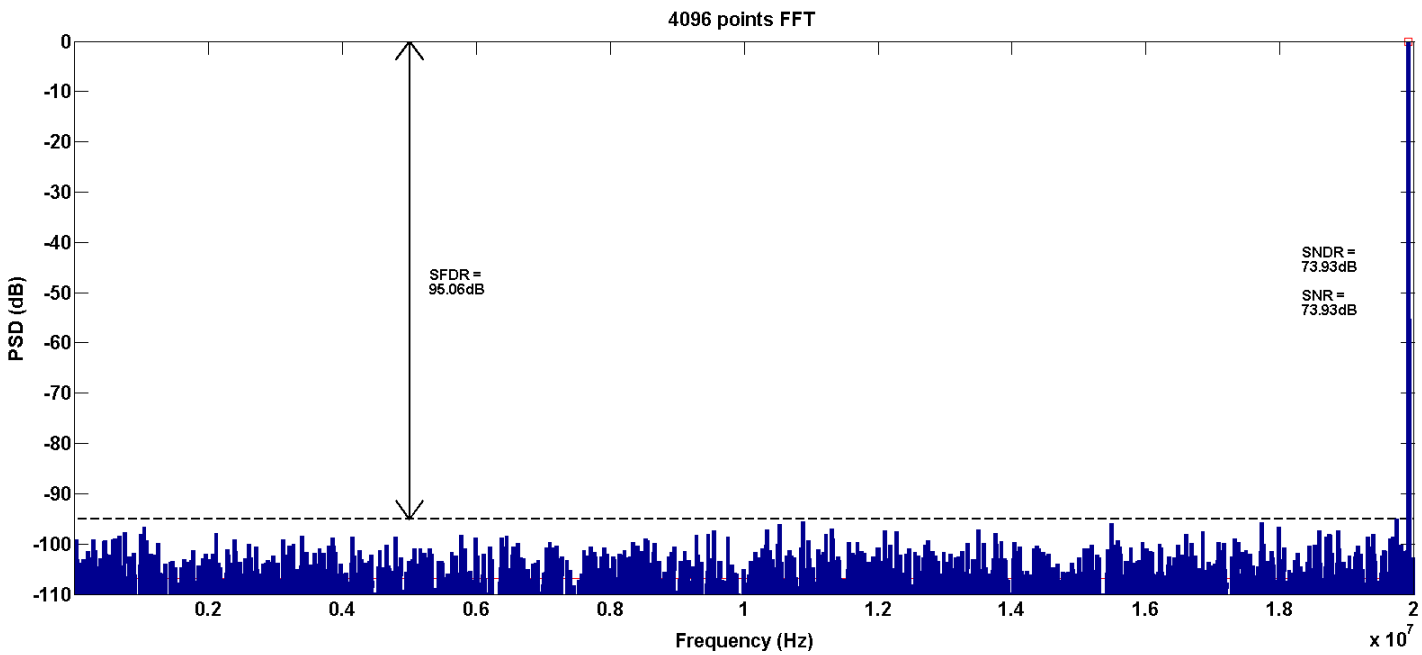

Future Work

- Implement the RS technique into the first stage.
- Doing more simulation on first stage before next meeting, such as corner simulation and noise simulation.

Reference

1. J.-H. Tsai et al., “A 0.003 mm2 10 b 240 MS/s 0.7 mW SAR ADC in 28 nm CMOS with digital error correction and correlated-reversed switching,” IEEE J. Solid-State Circuits, vol. 50, no. 6, pp. 1382–1398, Jun. 2015.

Backup

If the digitized code is 111, the following switching will not switch back.

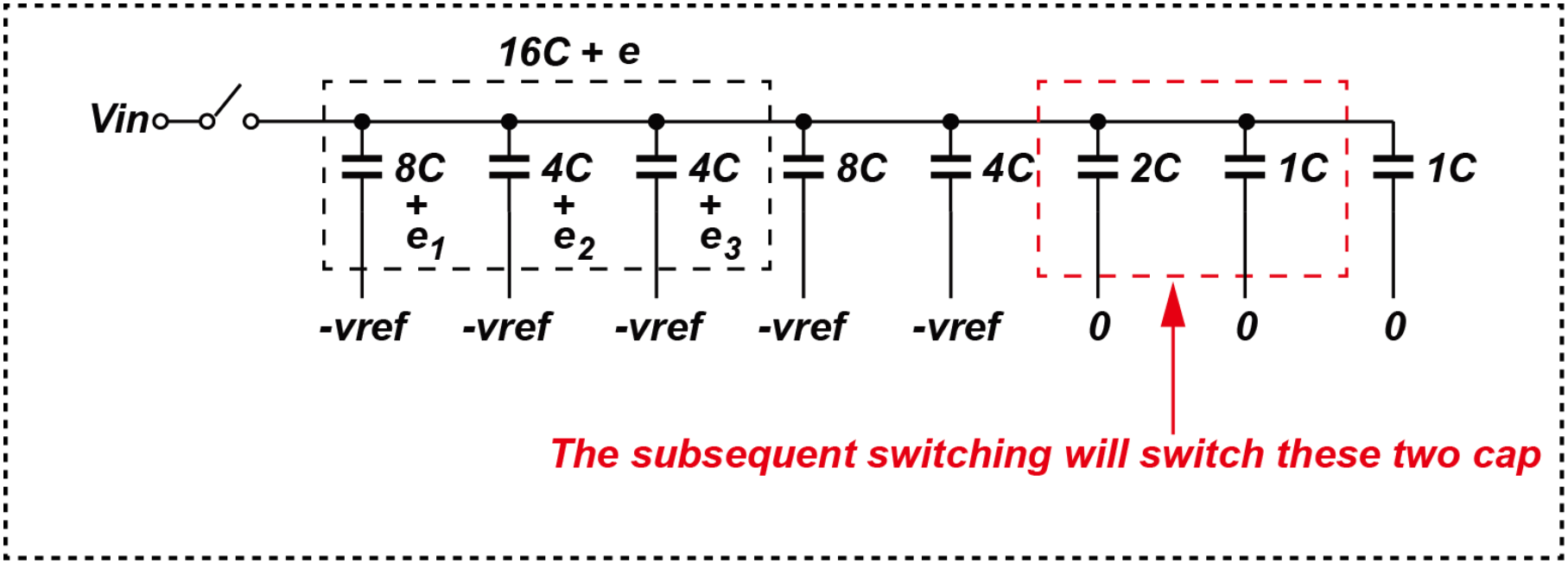

Backup

Performing more bits RS will alleviate this dilemma.

Assuming 111 has been resolved and the following sequence will be 00, 01, 10, 11.

Except for 11111, the other sequence will have at least one switching back.

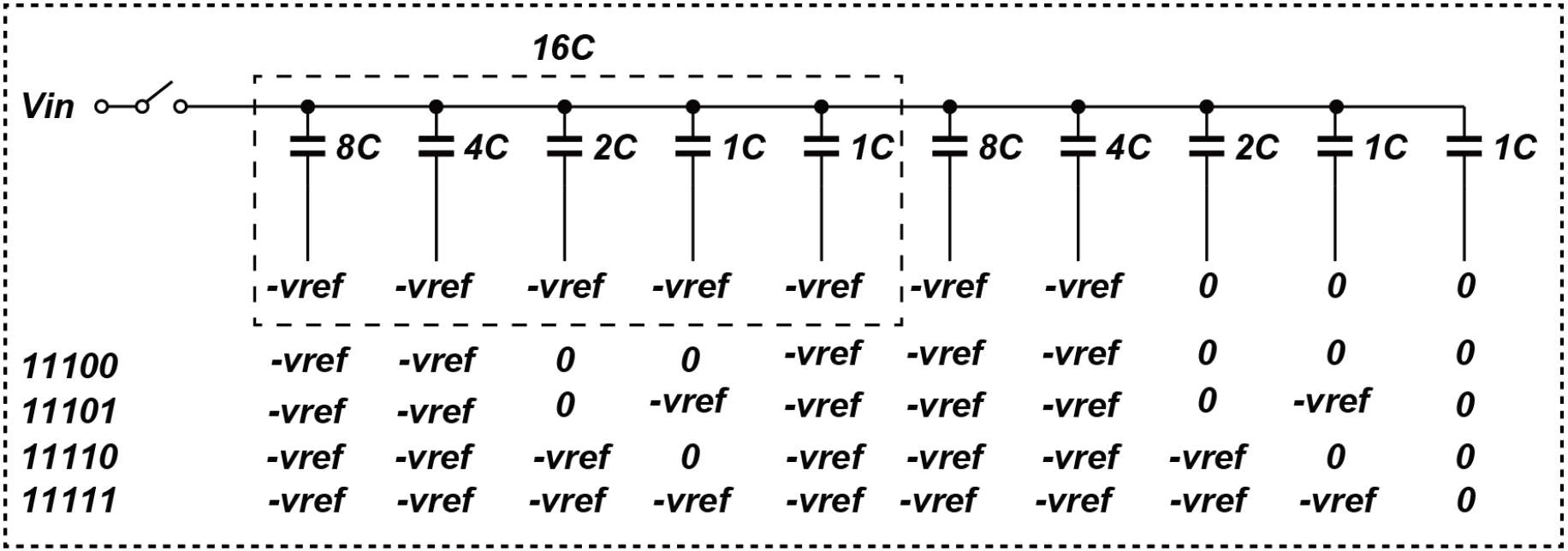

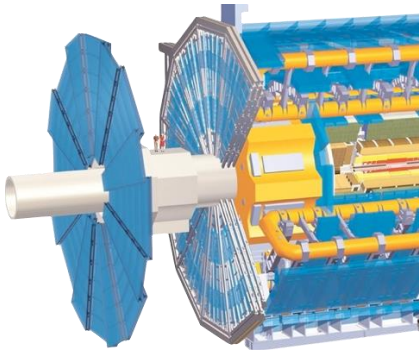

UT-Austin ADC Design ATLAS LAr Calorimeter at HL-LHC

Chen-Kai Hsu

ckhsu@utexas.edu

Nov 4, 2016

What about 8x inter-stage gain ?

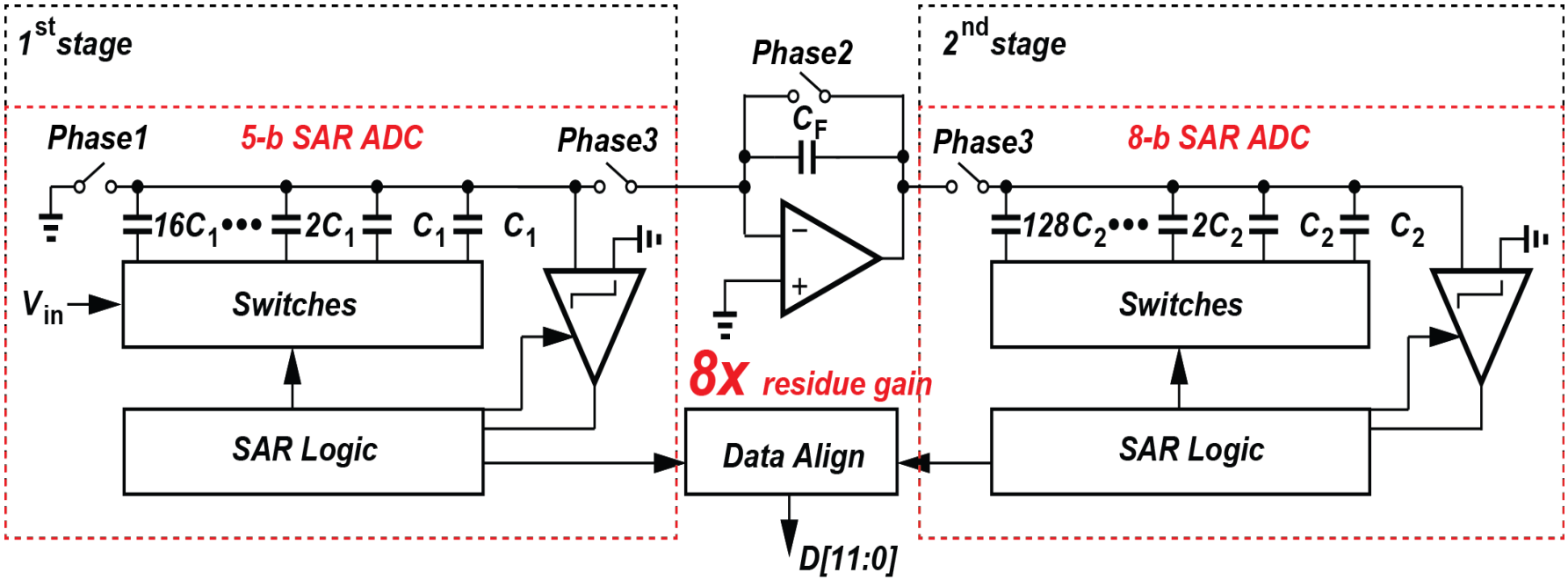

Open-Loop Gain can be reduced from 78dB to 72dB.

Unit-Gain Bandwidth can be reduced from 1.27GHz to 635MHz.

Due to reduced swing, maybe we can just use telescopic with gain boosting(One-stage which means low power).

OPAMP

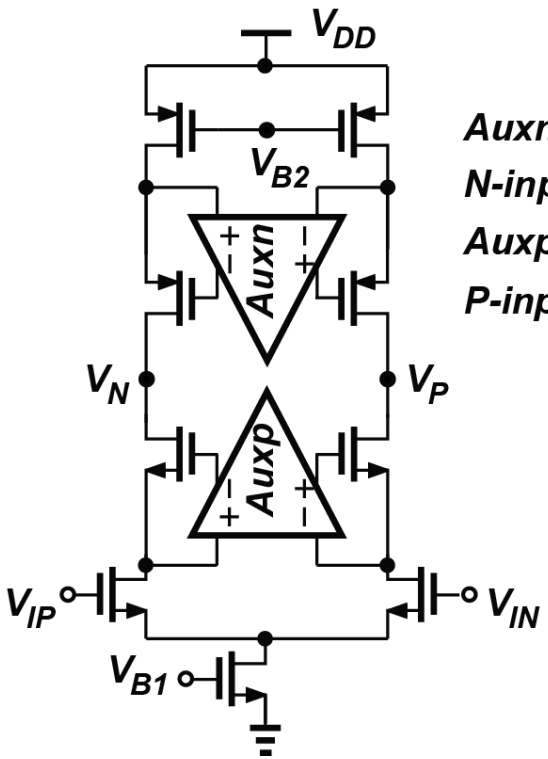

Auxn:
N-input Folded Cascode
Auxp:
P-input Folded Cascode

	Specification
Supply Voltage	1.2 V
Technology	TSMC 65LP 1P6M
DC Gain	80dB
Current-Main	750uA
Current-Auxn	100uA
Current-Auxp	100uA
Bias Circuit	200uA
PhaseMargin	80 degree
Unit-Gain Freq	2.1GHz

- According to [1], the frequency response of this opamp has to be carefully designed to ensure stability and to avoid pole-zero doublet, causing slow settling.
- $\beta\omega_{main,ta} < \omega_{aux,ta} < \omega_{main,2n\,pole}$

Step Response

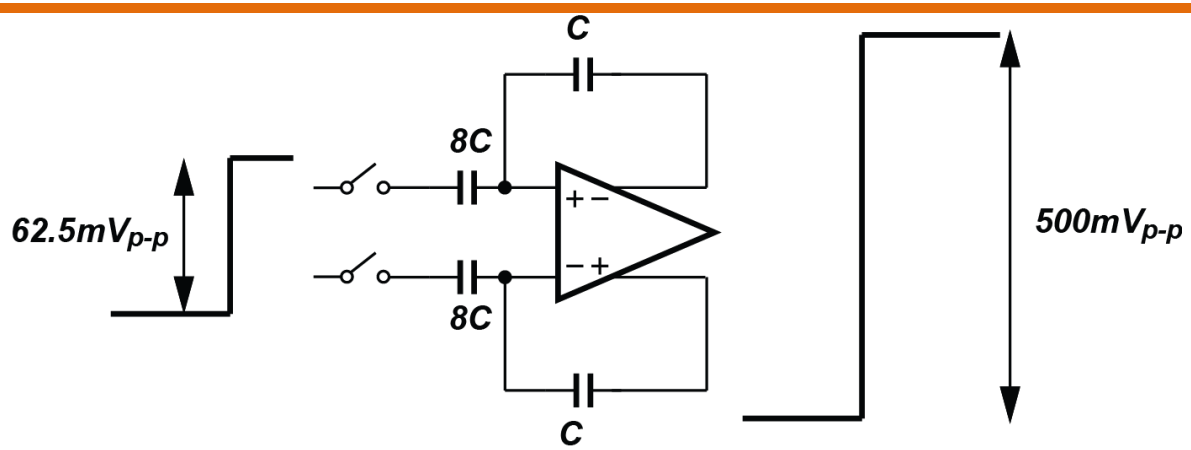

Error = 250m-249.96m = 0.04m < (0.5)/2^9

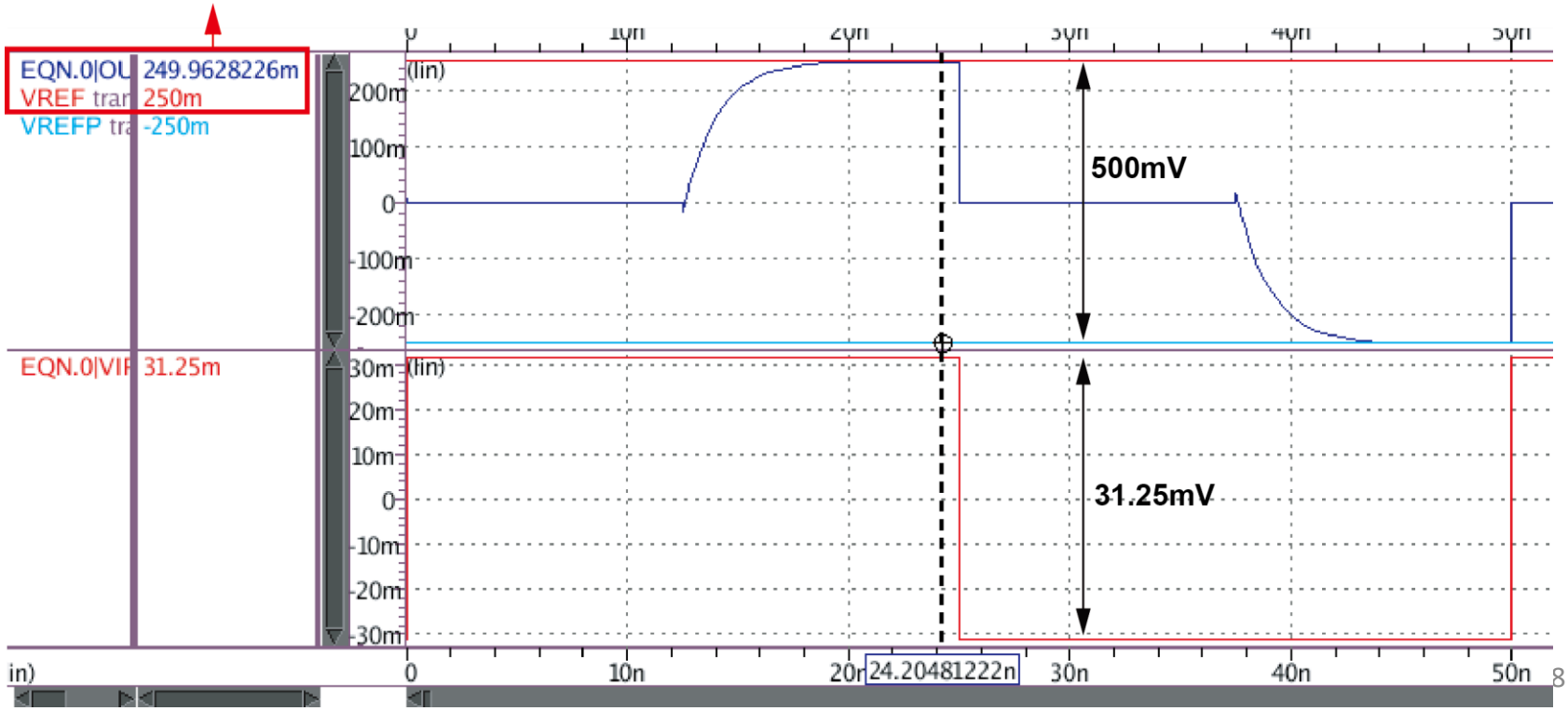

Linearity Test

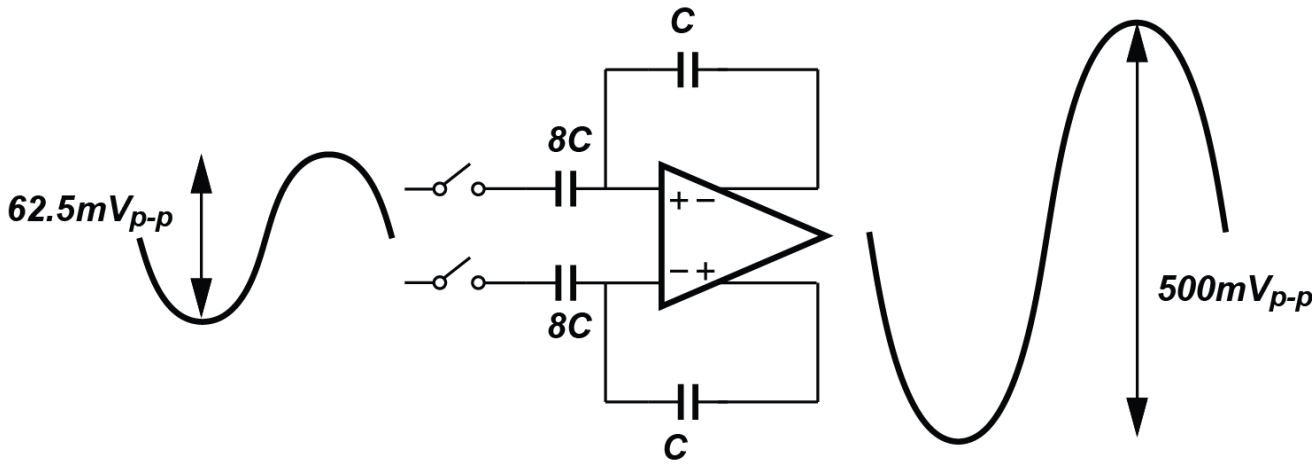

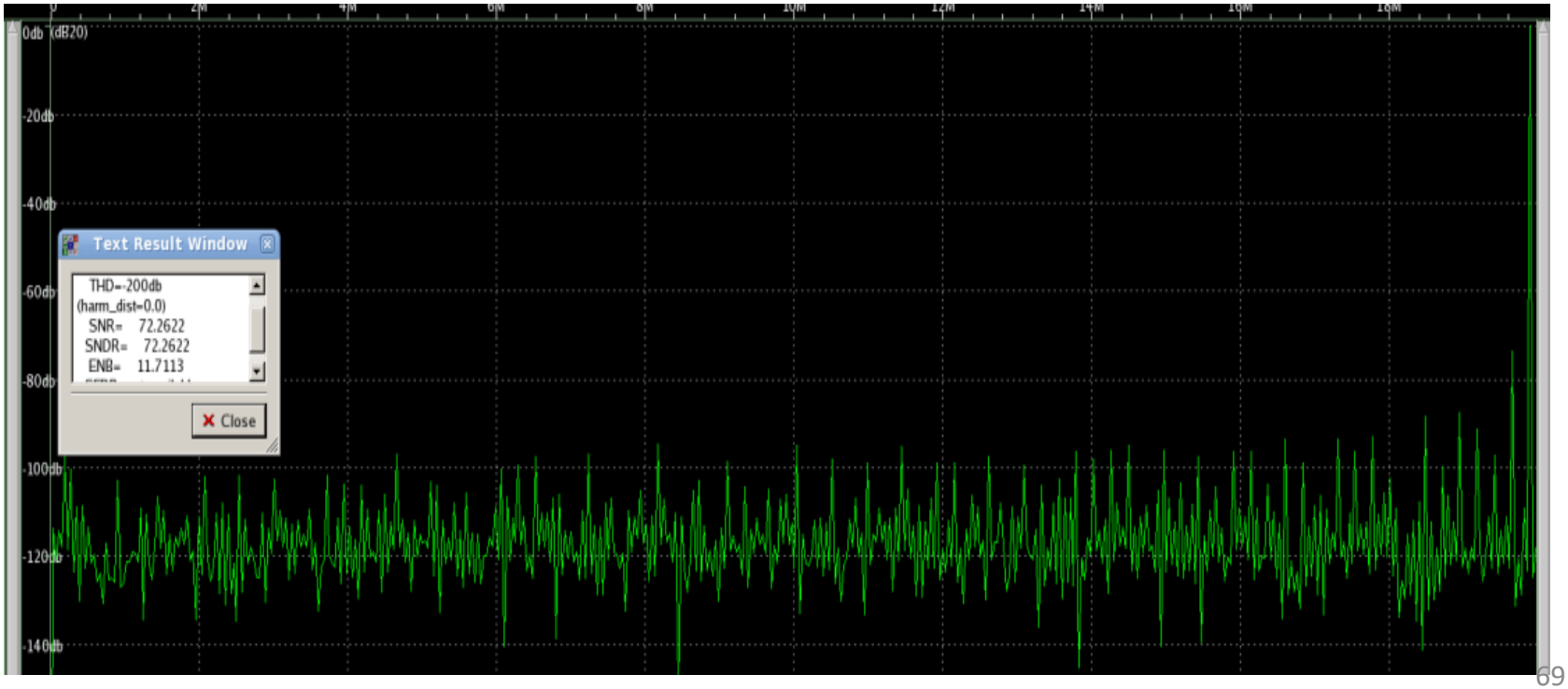

Comparator & SAR Logic

- [2] ISSCC' 15
- Low noise single phase dynamic latched comparator

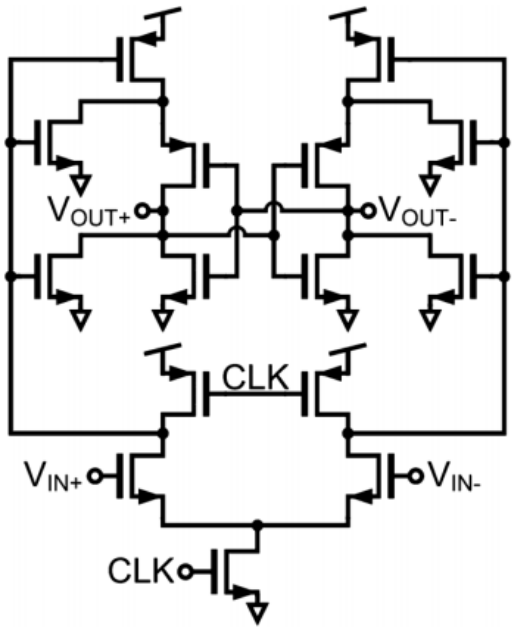

- [3] VLSI'11
- Direct switching

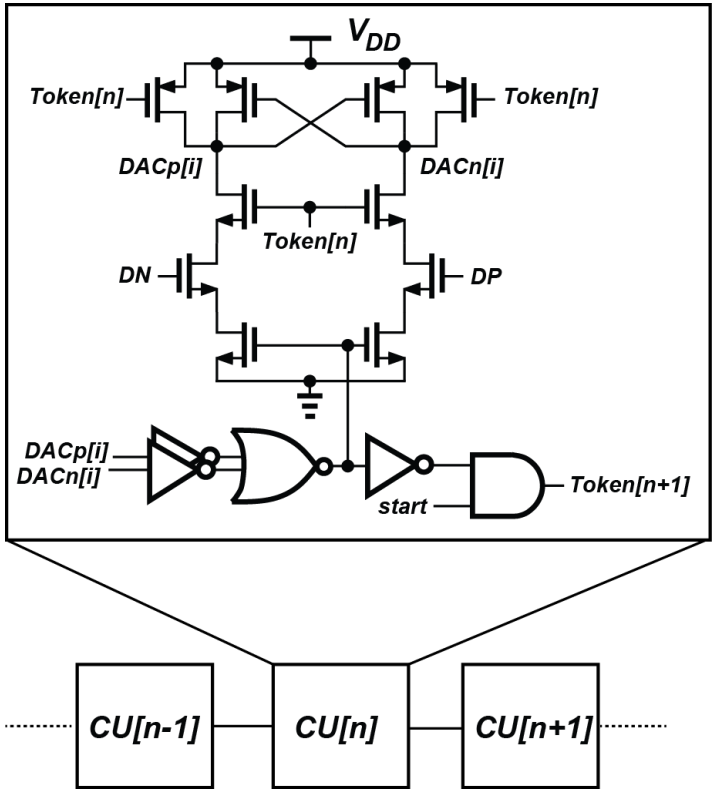

Progress

- **Things have been done:**

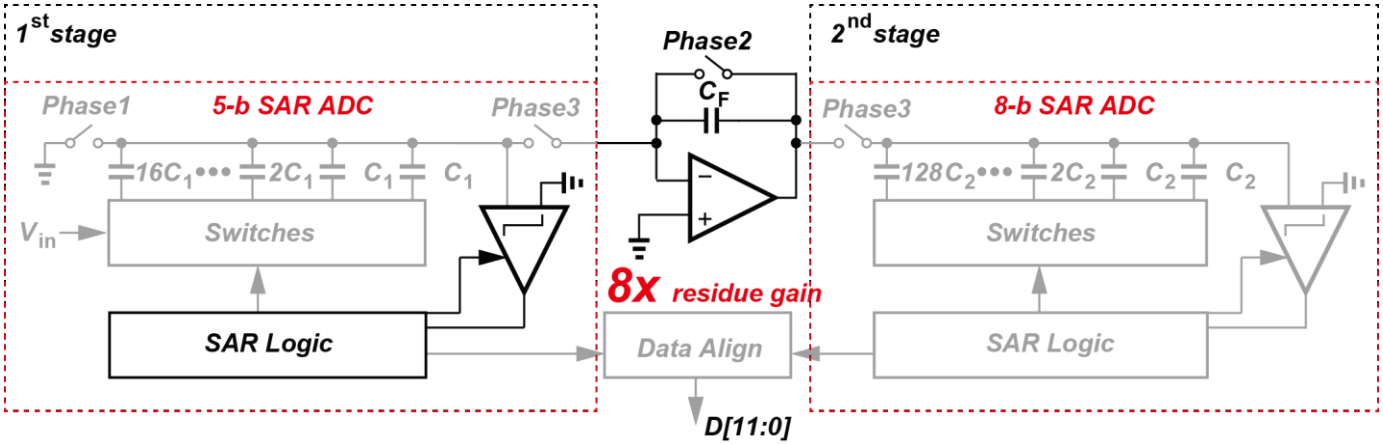

- **Future Plan(in the near 1 to 2 weeks):**

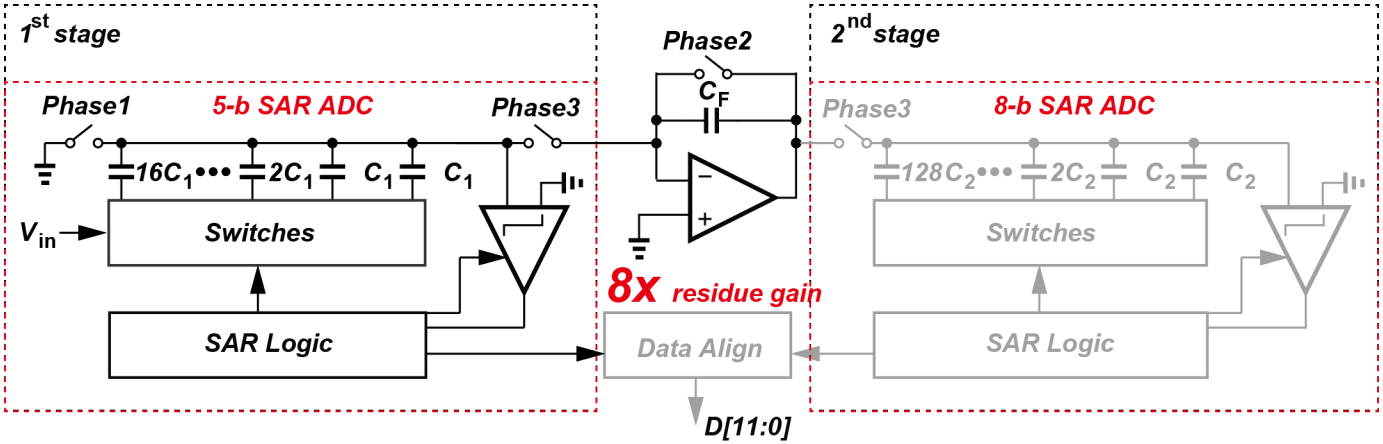

Some 12-b Prior Arts

	[4] ESSCIRC'16	[2] ISSCC'15
Architecture	Noise Shaping SAR ADC	Pipeline SAR ADC
Technology	130 nm	65 nm
DAC Calibration	No	No
Total capacitance	2.1 pF	2.048 pF
SNDR	74 dB	70.9 dB
SFDR	95 dB	84.6 dB

Reference

1. K. Bult and G. J. G. M. Geelen, "A fast-settling CMOS Op Amp for SC circuits with 90-dB dc gain," ***IEEE J. Solid-State Circuits***, vol. 25, pp.1379–1384, Dec. 1990.
2. Y. Lim and M. P. Flynn, "A 1 mW 71.5 dB SNDR 50 MS/S 13b fully differential ring-amplifier-based SAR-assisted pipeline ADC," ***in Proc. IEEE ISSCC. Dig. Tech. Papers***, Feb. 2015, pp. 1–3.
3. J.-H. Tsai, Y.-J. Chen, M.-H. Shen and P.-C. Huang, "A 1-V, 8b, 40MS/s, 113µW Charge-Recycling SAR ADC with a 14µW Asynchronous Controller," ***Symp. on VLSI Circuits***, pp. 264-265, June 2011.
4. Wenjuan Guo, and Nan Sun , "A 12b-ENOB 61µW noise-shaping SAR ADC with a passive integrator ," ***ESSCIRC,*** pp. 405-408, Oct. 2016.

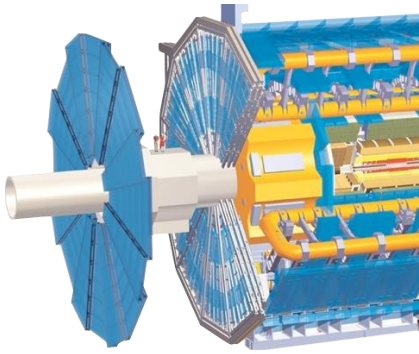

UT-Austin ADC Design ATLAS LAr Calorimeter at HL-LHC

Chen-Kai Hsu

ckhsu@utexas.edu

October 7, 2016

Chen-Kai Hsu

- Education
  - M.S., National Taiwan Univ., 2015
  - B.S., National Chung Cheng Univ., 2012.
- First year PhD student at UT Austin.
- My research interests include high-performance data converters, sensor interface, and mixed-signal circuits
- Process experience:
  - CMOS 0.18um / 90nm / 40nm.
- Some Research experience:
  - Low-power high-speed Pipeline ADC in 90-nm technology.
  - Low-power SAR ADC in a 0.18-um technology for smart badge.
- Publication:
  - **Chen-Kai Hsu** and Tai-Cheng Lee, "A Single-Channel 10-b 400-MS/s 8.7-mW Pipeline ADC in a 90-nm Technology." *IEEE Asian Solid-State Circuits Conf. Dig. Tech. Papers*, pp. 233-236, Xiamen, China, Nov. 2015.

Architectural Level Plan

The ADC is a 5 + 8 bit two-step structure with 1 bit inter stage redundancy to generate a 12-bit output.

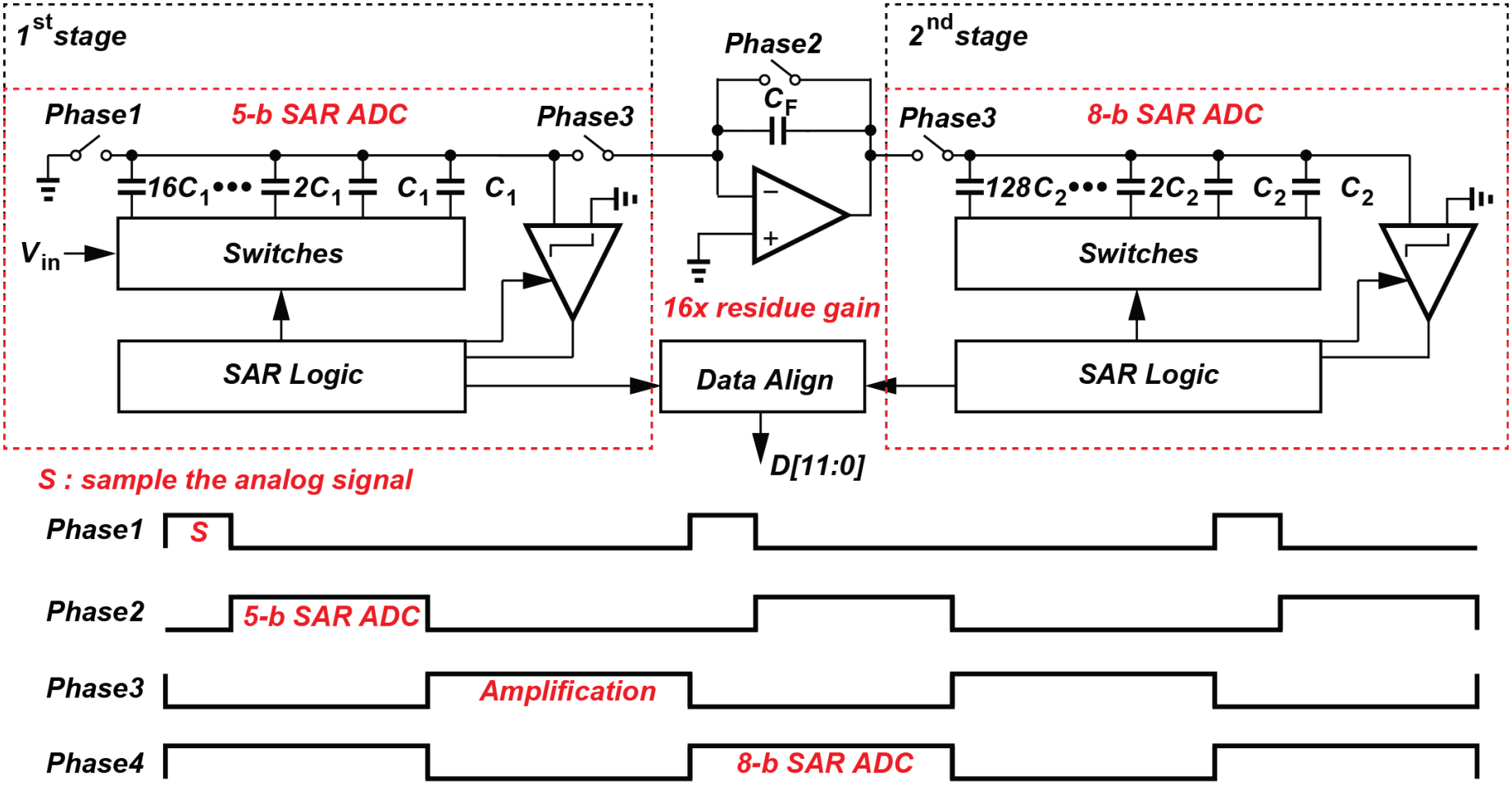

Top Level Consideration

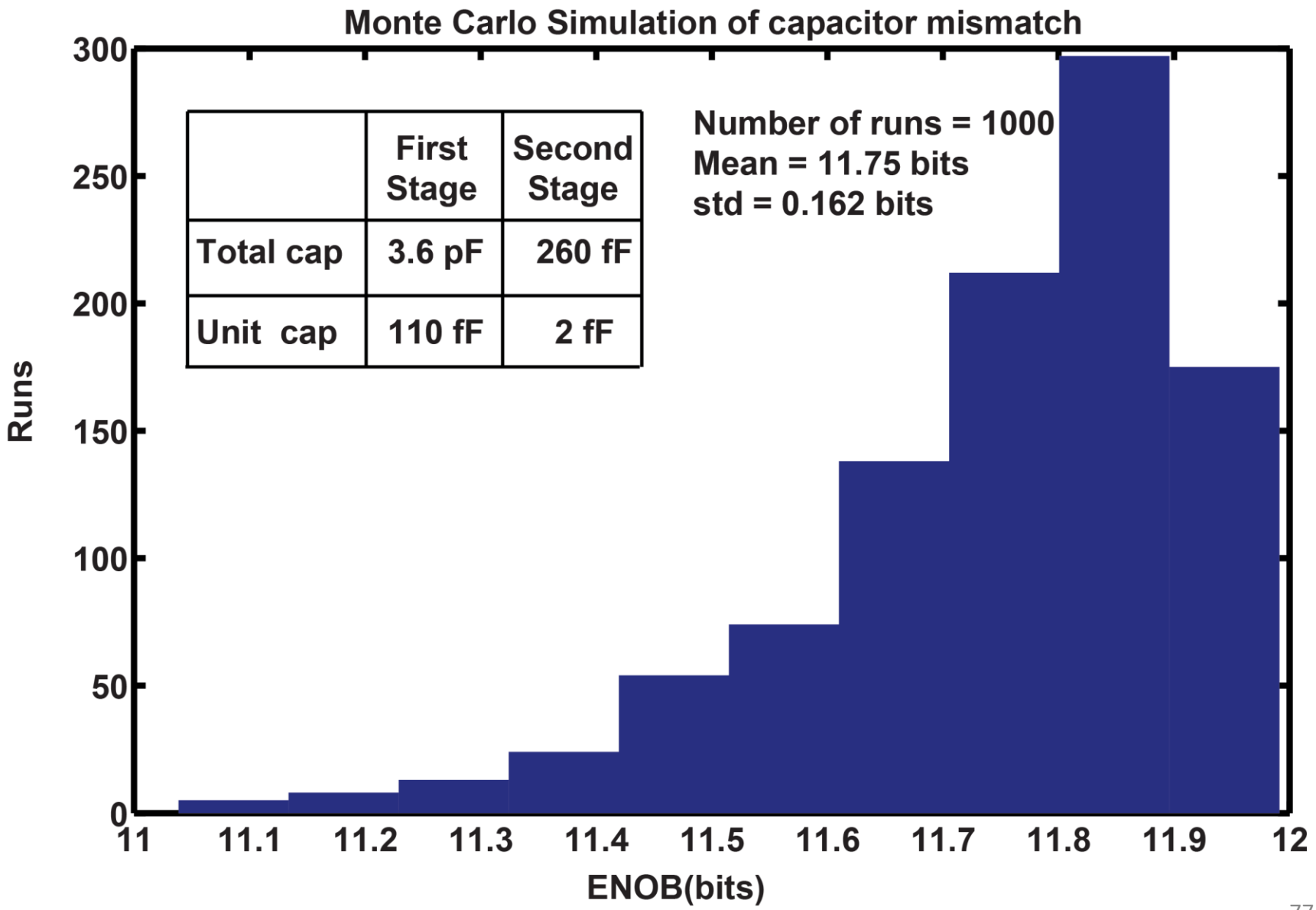

	First Stage	Second Stage
Total cap	3.6 pF	260 fF
Unit cap	110 fF	2 fF

Top Level Consideration

- **Open-loop gain consideration:**

By charge conservation, the output of a residue amplifier can be derived as:

$$V_{RES} \approx \frac{32C_1}{C_F}\left(VIN - \frac{1}{32}(16B_1 + 8B_2 + \cdots + B_5)V_{REF}\right)(1 - \text{Error})$$

Where Error = $\frac{32C_1 + C_P + C_F}{AC_F}$

Therefore, in order to provide **16x** close-loop gain, we need a **78dB** open-loop gain amplifier to satisfy 8-b accuracy(1/2LSB).

- **Bandwidth consideration:**

Assuming amplifier is a single pole system, we have:

$$V_{RES} = V_{STEP}(1 - e^{-t/\tau}) \qquad \tau = \frac{1}{\omega_{3dB}}$$

At least, 1.27GHz unit-gain bandwidth is needed.

Top Level Consideration

Assuming 2 stage Miller compensated OTA:

$$Phase\ Margin = 90° - \arctan\left(\frac{g_{m1}/C_C}{g_{m2}/C_L}\right);$$

$$g_m = \frac{I_{tail}}{V_{overdrive}}$$

For Phase Margin at least greater than 65 degree,

- $I_{stage2} = I_{stage1}$ ⇨ C_C=2.2C_L (V_{eff} are the same at each stage)
- C_L =260fF(decided by monte carlo simulation). ⇨ C_C=572fF
- g_m=2*pi*1.27GHz*C_C =4.5mS
- So, $I_{stage2} = I_{stage1}$ = 0.45mA (assume $V_{overdrive}$=0.1 V)

Estimated Power

Power estimaton of this work	
Total	> 3.6 mW
Amplifier	> 1.08 mW
Ref. buffer	2 mW
others	0.9 mW

*others include
1.digital circuit
2.bootstrap switch
3.clock buffer

	This work	(1) VLSI 2010
Architecture	Pipeline SAR	Pipeline SAR
Calibration	No	No
Technology	TSMC 65 nm	65 nm
Resolution	12 bits	12 bits
Supply Voltage	1.2 V	1.3 V
Sampling Frequency	40 MHz	50 MHz
ENOB	> 11.2 bits	10.7 bits
Power	> 3.6mW	*3.5mW
Input Range(diff.)	2 Vp-p	2 Vp-p

* Power excluding reference buffer

Specification Review

	Specification	Confidence
Technology	TSMC 65 nm	OK
Supply Voltage	1.2 V	OK
Sampling Frequency	40 MHz	OK
ENOB	11.2 bits	a little tough
Power	< 20 mW	OK
Input Range	2 Vp-p	OK

Schedule

Expected Timeline before tapeout

Oct. '16	Nov. '16	Dec. '16	Jan. '17	Feb. '17 to Apr. '17
Amplifier Design	Stage1 Design	Stage2 Design	Whole chip Optimization	Layout and post-simulation

Reference

1. C. C. Lee and M. P. Flynn, “A SAR-assisted two-stage pipeline ADC,” *IEEE J. Solid-State Circuits*, vol. 46, no. 4, pp. 859–869, Apr. 2011.

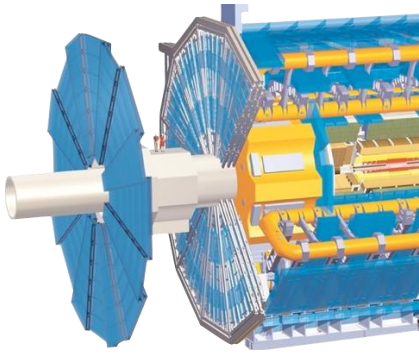

Back up slides

Solution1 for stage2

1. Bridge Capacitor Array

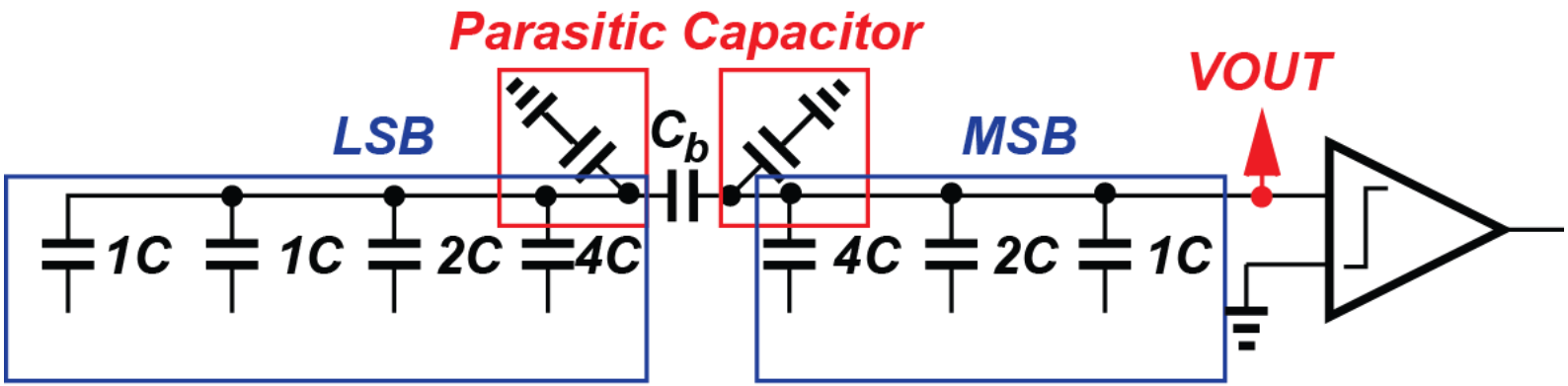

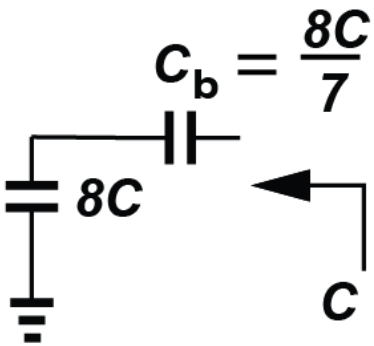

Solution2 for stage2

Hybrid DAC

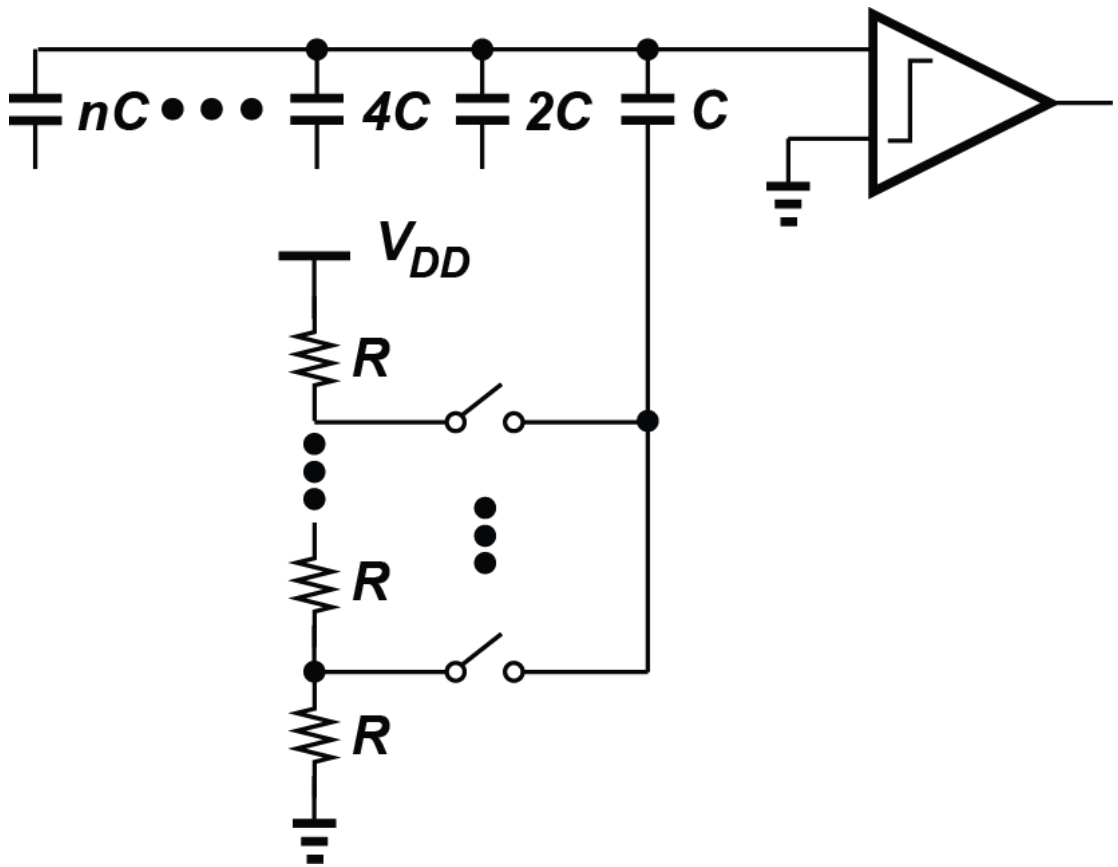
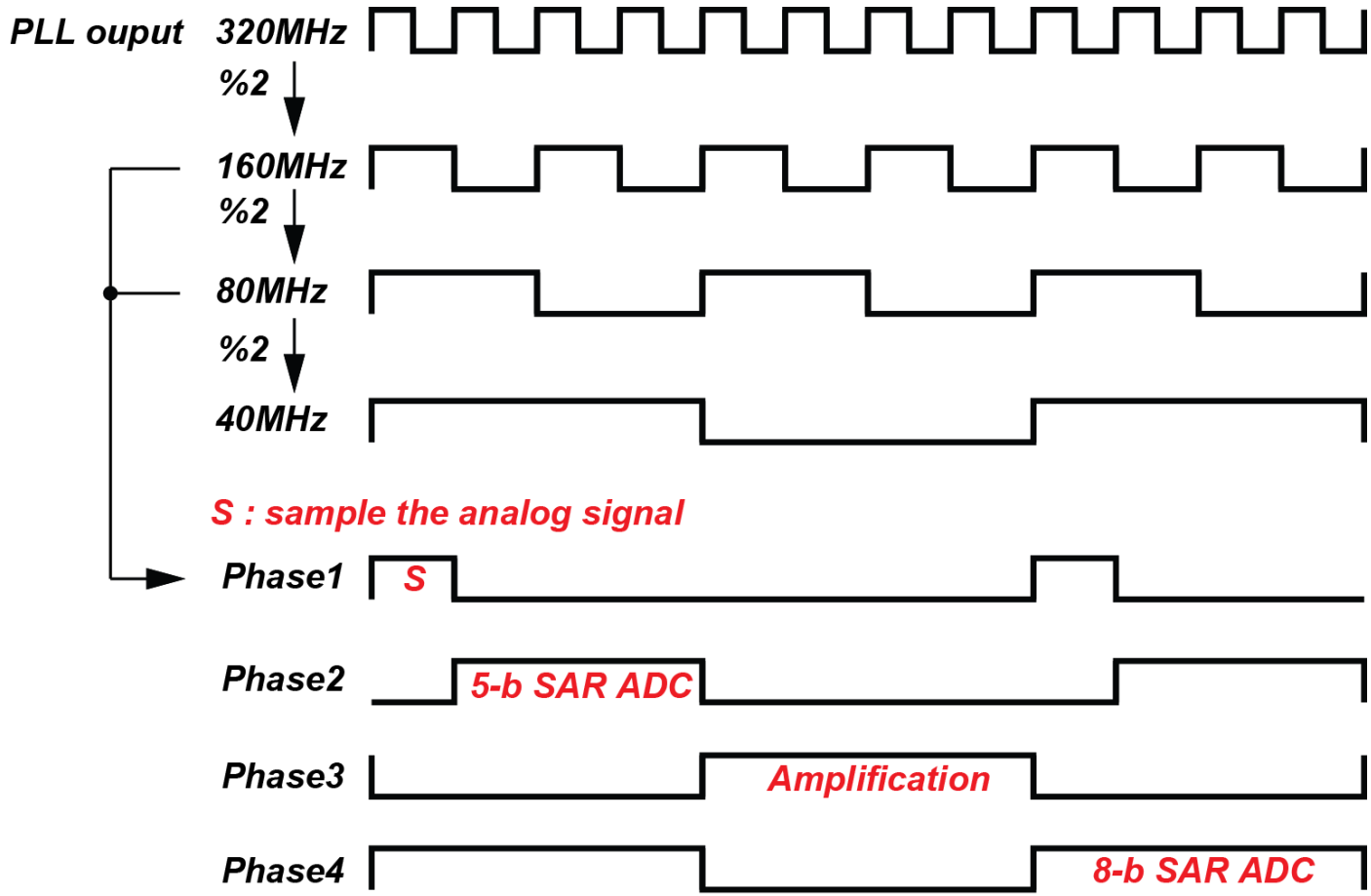
Clock Buffer