B.T.Fleming
December 9th, 2010

microboone

- History of LArTPCs
- MicroBooNE
  - Physics
  - Development
- Beyond MicroBooNE

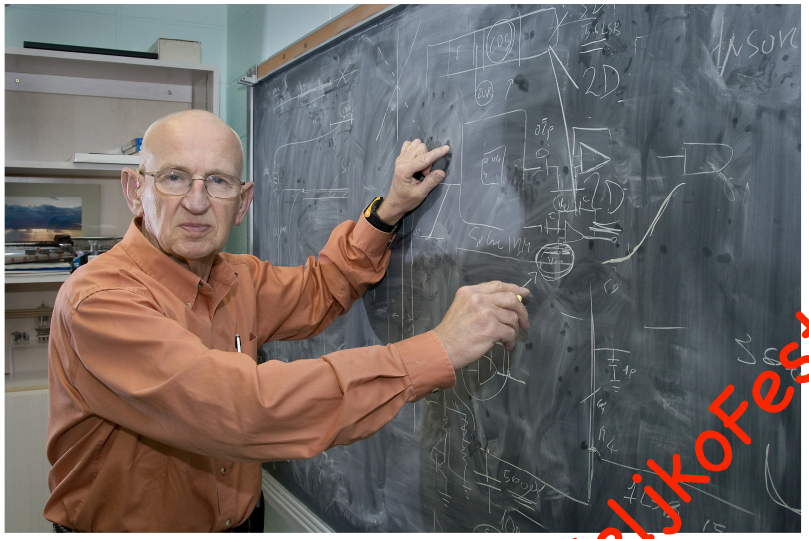

VeljkoFest!

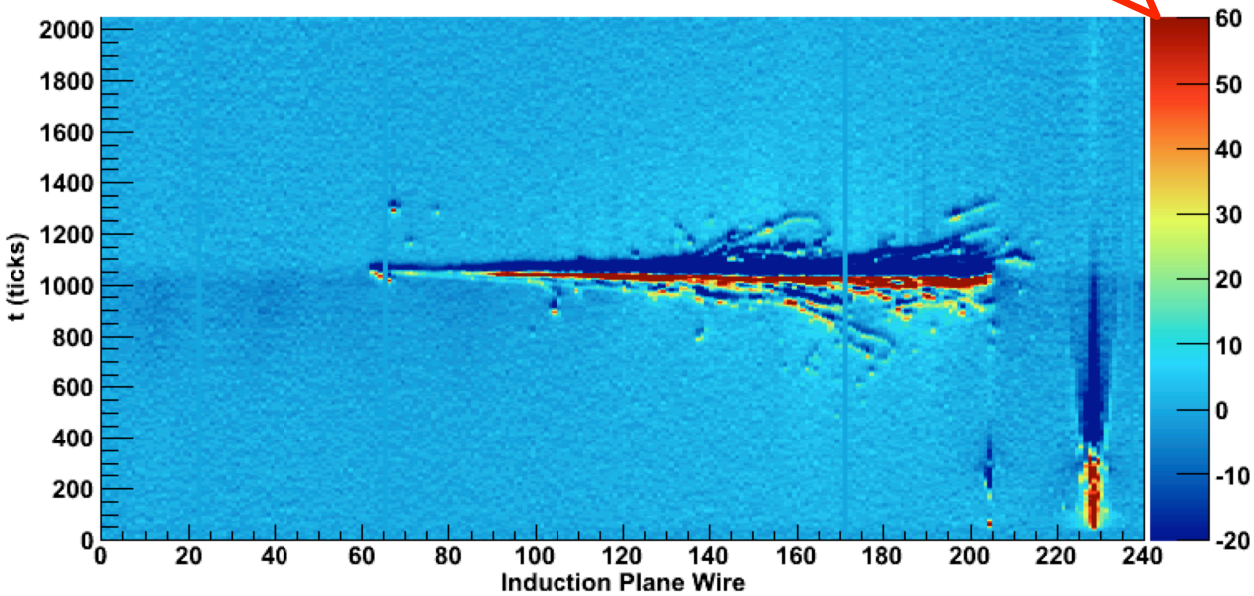

Liquid Argon Time Projection Chamber technique

Passing charged particles ionize Argon – 55k ionization electrons/cm

Electric field drifts electrons meters to wire chamber planes

Induction/Collection planes image charge, record dE/dx

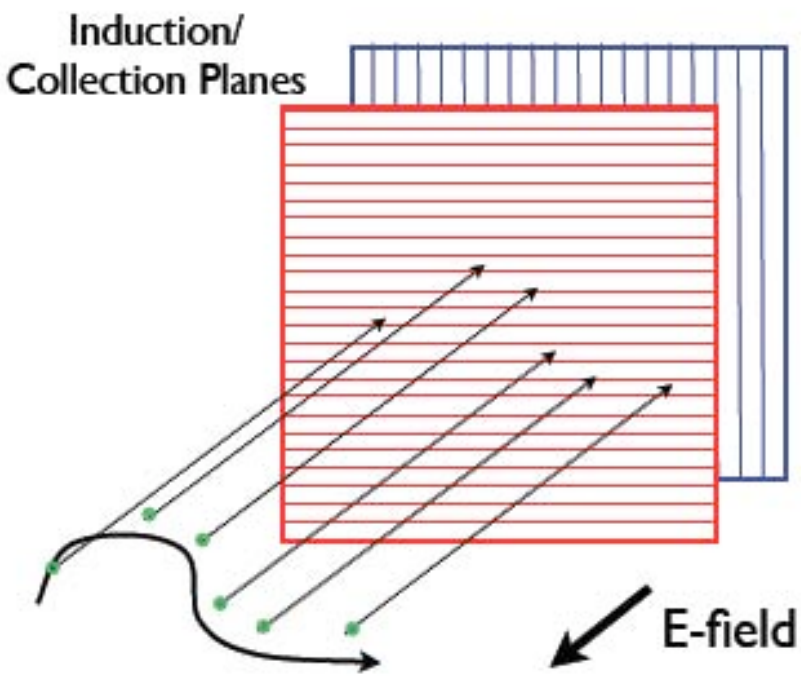

Example Neutrino event in ArgoNeuT detector: induction and collection planes

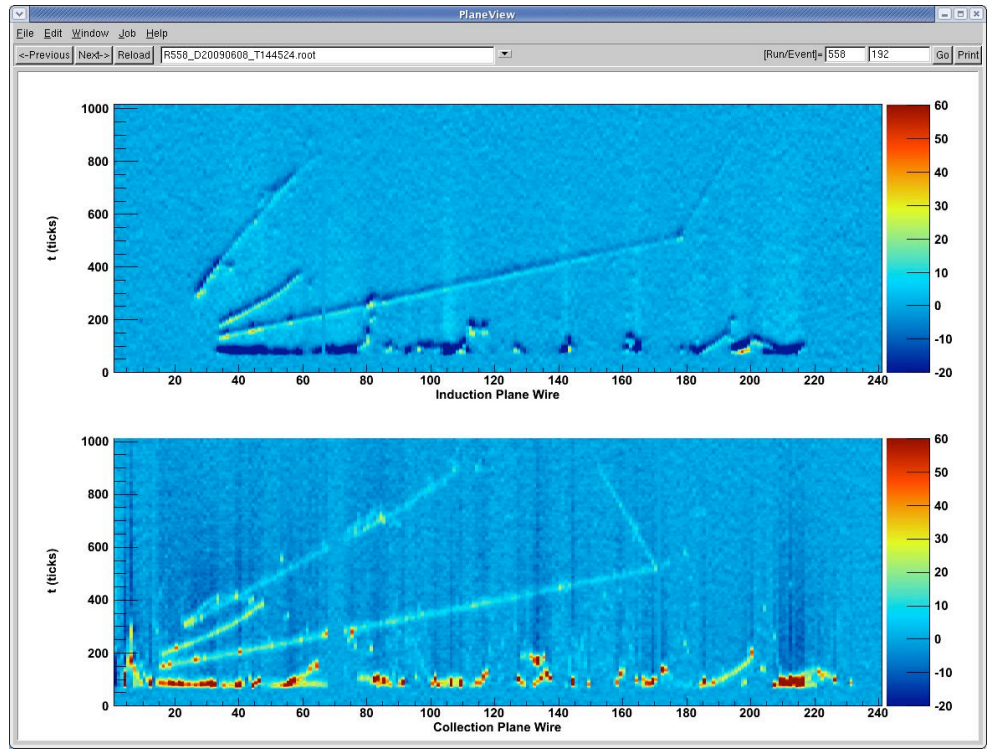

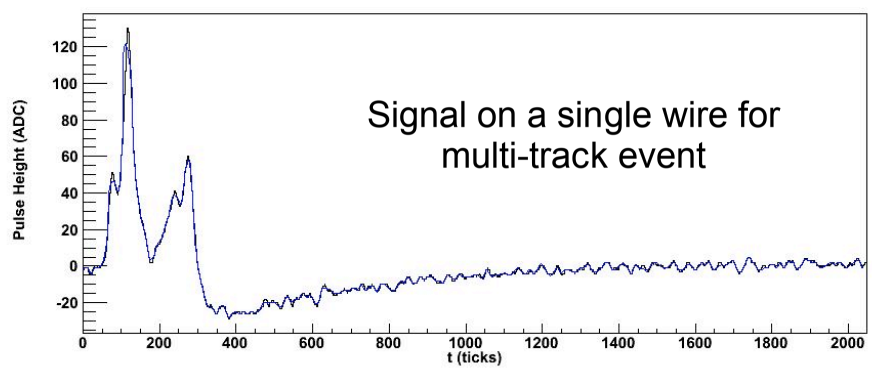

A brief history of LArTPC detection for neutrino physics:

NUCLEAR INSTRUMENTS AND METHODS 120 (1974) 221–236; © NORTH-HOLLAND PUBLISHING CO.

LIQUID-ARGON IONIZATION CHAMBERS AS TOTAL-ABSORPTION DETECTORS*

W. J. WILLIS†

Department of Physics, Yale University, New Haven, Connecticut 06520, U.S.A.

and

V. RADEKA

Instrumentation Division, Brookhaven National Laboratory, Upton, New York 11973, U.S.A.

Received 14 May 1974

Building from this:

- A neutrino detector sensitive to rare processes. A study of neutrino electron reactions. H. Chen et al. Fermilab experiment proposal E496, 1976

- Development work on LArTPC chambers, such as "Observation of Ionization Electrons Drifting Large Distances in LAr" H. Chen et al, 1977

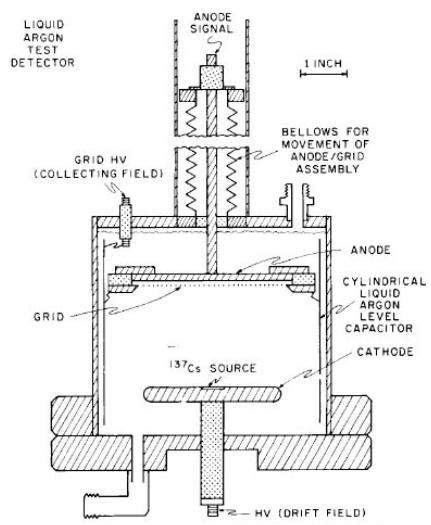

Four channel prototype to test technique

Carlo Rubbia proposes LAr detectors for neutrino physics and starts an R&D program towards ICARUS (1977)

Test Stands

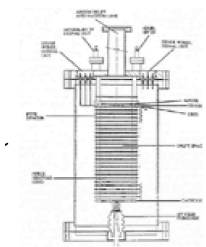

24 cm drift wires chamber

1987: First LAr TPC. Proof of principle. Measurements of TPC performances.

3 ton prototype

1991-1995: First demonstration of the LAr TPC on large masses. Measurement of the TPC performances. TMG doping.

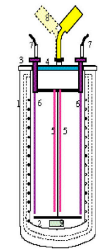

Seeing neutrino Interactions

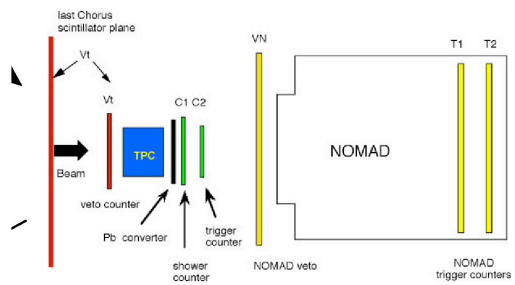

50 litres prototype
1.4 m drift chamber

1997-1999: Neutrino beam events measurements. Readout electronics optimization. MLPB development and study. 1.4 m drift test.

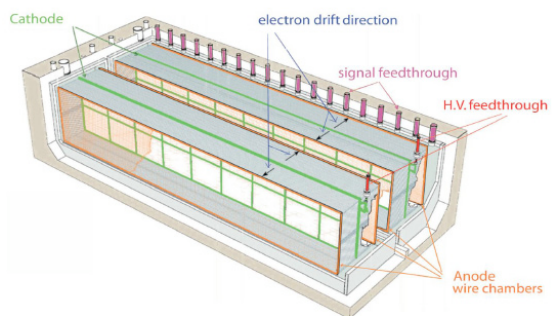

T600: 600 ton LarTPC
In Gran Sasso National Lab
~17 GeV CNGS beam

Neutrino interaction in ICARUS from CNGS beam

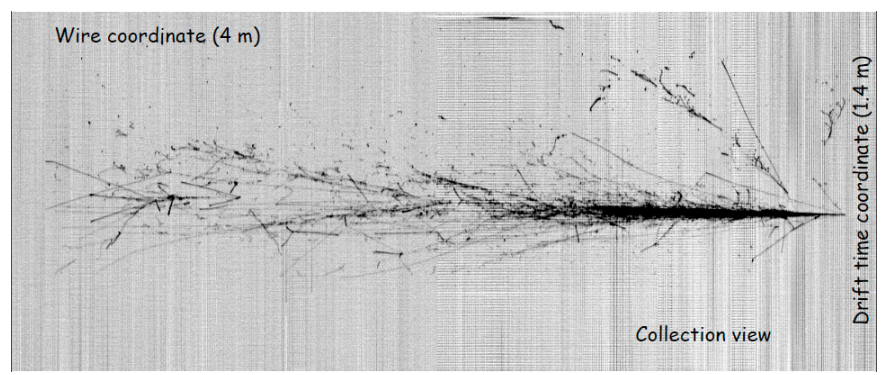

Birth of MicroBooNE:
First meeting in 2007 in
Instrumentation Division
at Brookhaven
BNL/Columbia/Yale

Physics:
Puzzling unresolvable excess
of events observed by the
MiniBooNE experiment

Technology:
LarTPC technique can
resolve low energy excess
with ~100 ton experiment

MicroBooNE
milestones

- 2007: First meeting at BNL
- Develop proposal driven by BNL groups in particular TPC and Electronics design in Instrumentation Division
- Proposed to FNAL Director and PAC in Fall 2007
- Stage 1 approval by FNAL director in 2008
- DOE CD-0 in 2009
- DOE CD-1 in 2010
- DOE CD-2 anticipated in 2011
- Data taking in 2013

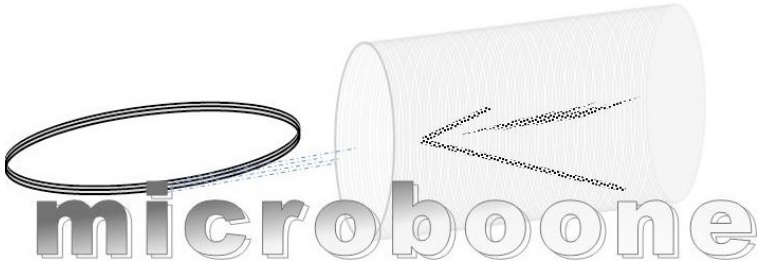

Liquid-Argon Time Projection Chambers

Outlook of R&D Program in the US

Active Volume

Yale TPC & Bo

Yale TPC: Dismantled
Bo: Operational

0.00002 kton

15 x

ArgoNeuT

Operational
Physics: Measure neutrino-argon cross sections

0.0003 kton

330 x

MicroBooNE

Construction begins 2010
Physics: Investigate low-energy neutrino interactions

0.1 kton

4 x 50 x

LAr TPC for LBNE

R&D in progress
Physics: Measure neutrino oscillations at 1,000+ km

20 kton

Final goal

Replicate proven technology
Physics: Search for CP violation in neutrino sector

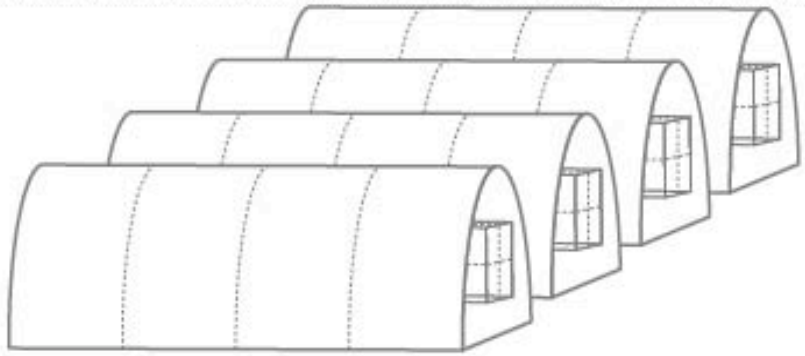

N x 20 kton

Brookhaven Laboratory
H. Chen, J. Farrell, F. Lanni, D. Lissauer, D. Makowiecji, J. Mead, V. Radeka, S. Rescia, J. Sondericker, C. Thorn, B. Yu

Columbia University
L. Camilleri, C. Mariani, M. Shaevitz, B. Willis**

Fermi National Accelerator Laboratory
B. Baller, C. James, S. Pordes, G. Rameika, B. Rebel, R. Schmitt, D. Schmitz, J. Wu

Los Alamos National Laboratory
G. Garvey, J. Gonzales, B. Louis, C. Mauger, G. Mills, Z. Pavlovic, R. Van de Water, H. White, S. Zeller

Massachusetts Institute of Technology
W. Barletta, L. Bugel, J. Conrad, C. Ignarra, B. Jones, G. Karagiorgi, T. Katori, H. Tanaka

Michigan State University
C. Bromberg, D. Edmunds

Princeton University
K. McDonald, C. Lu, Q. He

St. Marys
P. Nienaber

Syracuse University
M. Soderberg

University of Cincinnati
Randy Johnson

University of Texas at Austin
S. Kopp, K. Lang

Yale University
C. Anderson, E. Church, B. T. Fleming*, R. Guenette, S. Linden, K. Partyka, J. Spitz

*=Spokesperson, **=Deputy Spokesperson

MicroBooNE Physics and Development Goals

MicroBooNE Physics

- MiniBooNE low energy excess
- Suite of low energy cross section measurements

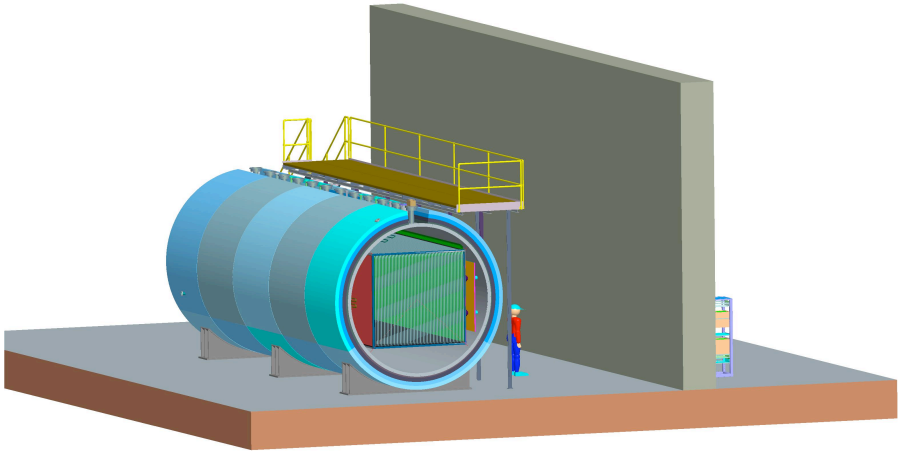

MicroBooNE LAr TPC Development Goals

- Demonstrate photon – electron identification
- Develop cold electronics
  - Implementation of cold electronics
    Develop TPC readout design and cryogenics
- Purity: Test of GAr purge in large, fully instrumented vessel
- Refine sensitivity estimates for next generation detectors
- Test ability to run on surface
- Develop tools for analysis
- Develop cost scaling model for larger detectors

Neutrino Cross Section Measurements

	Nuance channel	Reaction	#interactions/6E20 POT 70 ton FV	% of total ν_μ
CCQE	1 (CC)	$\nu_\mu n \longrightarrow \mu^- p$	52524	45.0
NCelastic	2 (NC)	$\nu_\mu N \longrightarrow \nu_\mu N$	16945	14.5
Single pion resonant	3 (CC)	$\nu_\mu p \longrightarrow \mu^- p\pi^+$	16124	13.8
	4 (CC)	$\nu_\mu n \longrightarrow \mu^- p\pi^0$	6106	5.2
	5 (CC)	$\nu_\mu n \longrightarrow \mu^- n\pi^+$	5833	5.0
	6 (NC)	$\nu_\mu p \longrightarrow \nu_\mu p\pi^0$	2878	2.5
	7 (NC)	$\nu_\mu p \longrightarrow \nu_\mu n\pi^+$	1819	1.6
	8 (NC)	$\nu_\mu n \longrightarrow \nu_\mu n\pi^0$	3572	3.1
	9 (NC)	$\nu_\mu n \longrightarrow \nu_\mu p\pi^-$	2368	2.0
DIS	91 (CC)	$\nu_\mu N \longrightarrow \mu^- X$	1123	1.0
	92 (NC)	$\nu_\mu N \longrightarrow \nu_\mu X$	410	0.4
Coherent/diffractive	96 (NC)	$\nu_\mu A \longrightarrow \nu_\mu A\pi^0$	1479	1.3
	97 (CC)	$\nu_\mu A \longrightarrow \mu^- A\pi^+$	2293	2.0
Subtotal			113474	97.3

	Nuance channel	Reaction	#interactions/6E20 POT 70 ton FV	% of total ν_e
CCQE	1 (CC)	$\nu_e n \longrightarrow e^- p$	285	37.2
NCelastic	2 (NC)	$\nu_e N \longrightarrow \nu_e N$	89	11.7
Single pion resonant	3 (CC)	$\nu_e p \longrightarrow e^- p\pi^+$	110	14.4
	4 (CC)	$\nu_e n \longrightarrow e^- p\pi^0$	48	6.3
	5 (CC)	$\nu_e n \longrightarrow e^- n\pi^+$	53	6.9
	6 (NC)	$\nu_e p \longrightarrow \nu_e p\pi^0$	19	2.5
	7 (NC)	$\nu_e p \longrightarrow \nu_e n\pi^+$	13	1.7
	8 (NC)	$\nu_e n \longrightarrow \nu_e n\pi^0$	24	3.1
	9 (NC)	$\nu_e n \longrightarrow \nu_e p\pi^-$	17	2.2
DIS	91 (CC)	$\nu_e N \longrightarrow e^- X$	26	3.4
	92 (NC)	$\nu_e N \longrightarrow \nu_e X$	9	1.1
Coherent/diffractive	96 (NC)	$\nu_e A \longrightarrow \nu_e A\pi^0$	9	1.1
	97 (CC)	$\nu_e A \longrightarrow e^- A\pi^+$	17	2.2
Subtotal			719	93.9

Suite of low energy cross section measurements

- Measurement of Δs
- Coherent vs. resonant pion production
- K production: cross sections and proton decay studies
- Electron neutrino cross sections

These drive MicroBooNE detector requirements

- Rare channels require good statistics
- Low energy channels require low trigger threshold
- Resolution of activity at the interaction vertex needed to observe nuclear effects

Expected event rates for 6.6 x 10^{20} pot on the BNB neutrino target

MiniBooNE low energy neutrino excess.....

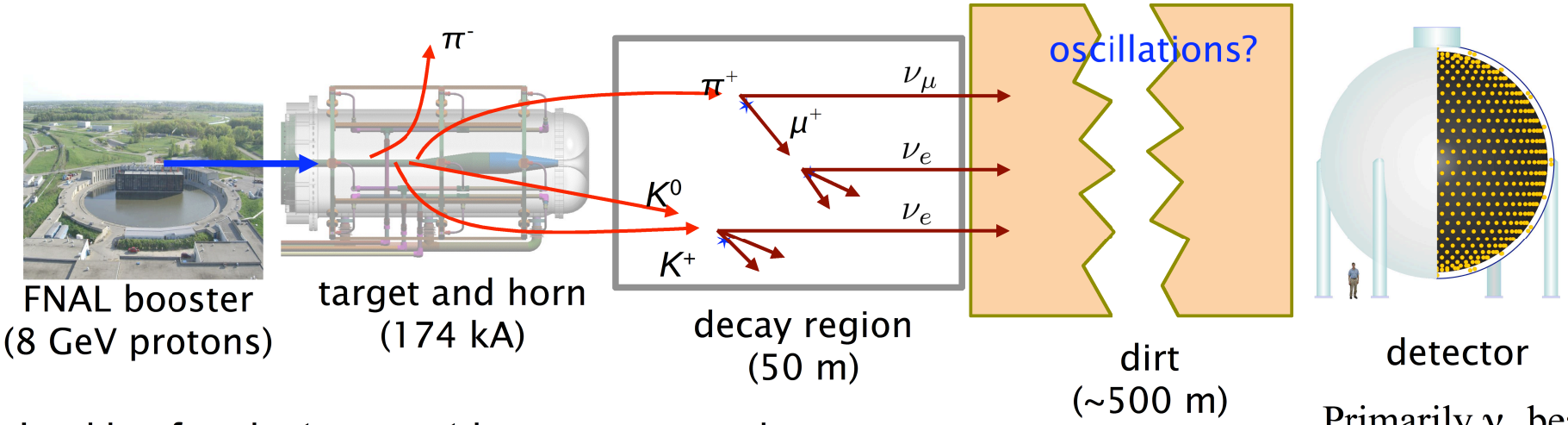

Looking for electron neutrino appearance in a muon neutrino beam

Primarily ν_μ beam

Intrinsic ν_es: 0.5%

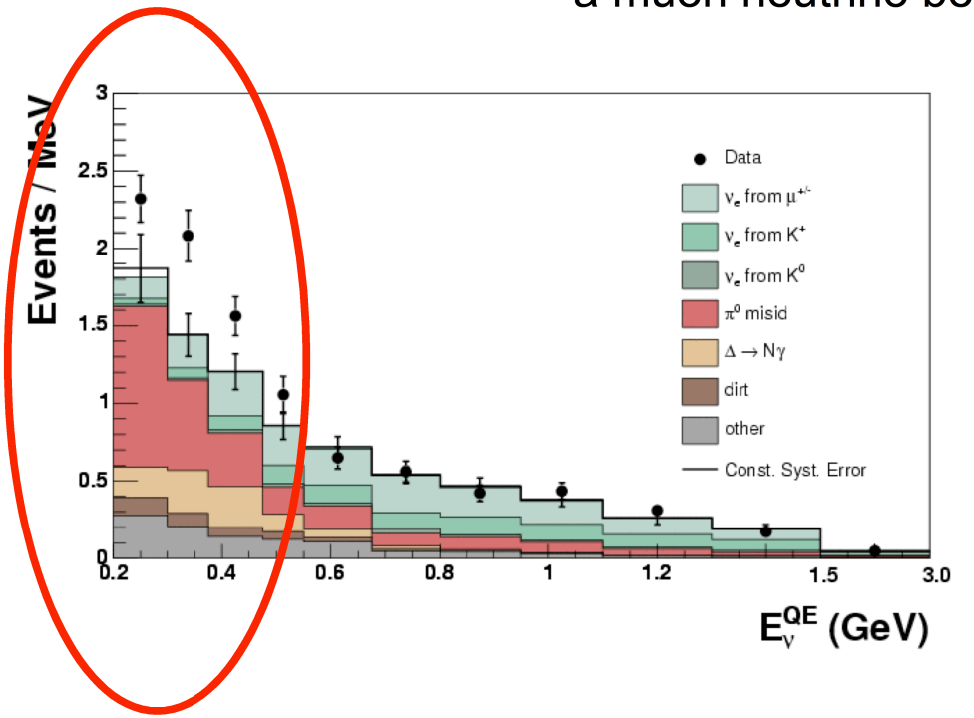

reconstructed neutrino energy bin (MeV)	200-300	300-475
total bkgnd	186.8±26.0	228.3±24.5
ν_e intrinsic	18.8	61.7
ν_μ induced	168	166.6
NC π^0	103.5	77.8
NC $\Delta \rightarrow N\gamma$	19.5	47.5
Dirt	11.5	12.3
other	33.5	29
data	232	312
	1.7 σ	3.4 σ

MiniBooNE Neutrino Oscillation Results

A.A. Aguilar-Arevalo et al., PRL 102, 101802 (2009)

Excess of events observed at low energy:
128.8 ± 20.4 ± 38.3 (3.0σ)

Suggests beyond the Standard Model physics

Cannot distinguish as electrons or photons!

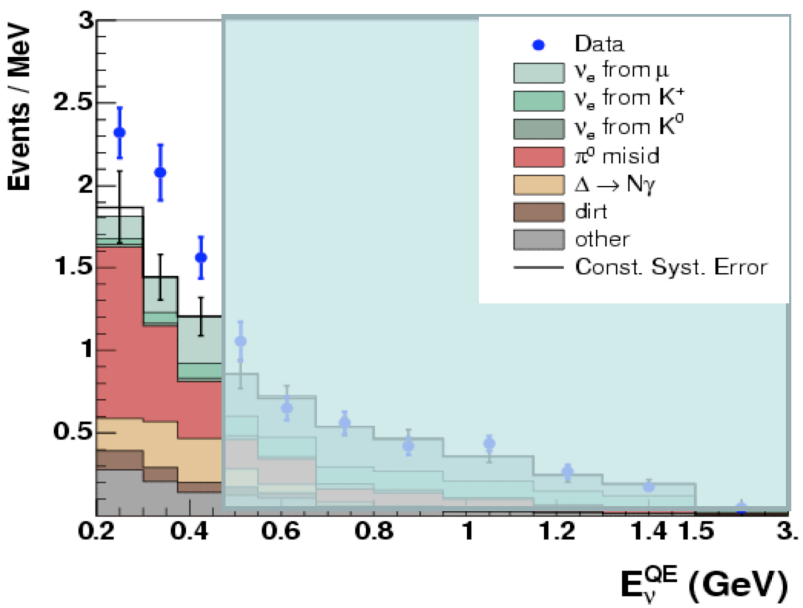

Anomaly Mediated Neutrino-Photon Interactions at Finite Baryon Density: Jeffrey A. Harvey, Christopher T. Hill, & Richard J. Hill, arXiv:0708.1281

CP-Violation 3+2 Model: Maltoni & Schwetz, arXiv:0705.0107; T. Goldman, G. J. Stephenson Jr., B. H. J. McKellar, Phys. Rev. D75 (2007) 091301.

Extra Dimensions 3+1 Model: Pas, Pakvasa, & Weiler, Phys. Rev. D72 (2005) 095017

Lorentz Violation: Katori, Kostelecky, & Tayloe, Phys. Rev. D74 (2006) 105009

CPT Violation 3+1 Model: Barger, Marfatia, & Whisnant, Phys. Lett. B576 (2003) 303

New Gauge Boson with Sterile Neutrinos: Ann E. Nelson & Jonathan Walsh, arXiv:0711.1363

MiniBooNE Antineutrino Oscillation Results

A. A. Aguilar-Arevalo, Phys. Rev. Lett. 105, 181801 (2010)

- Interesting hint of excess events in-consistent with MiniBooNE neutrino results in >475 MeV "analysis region"

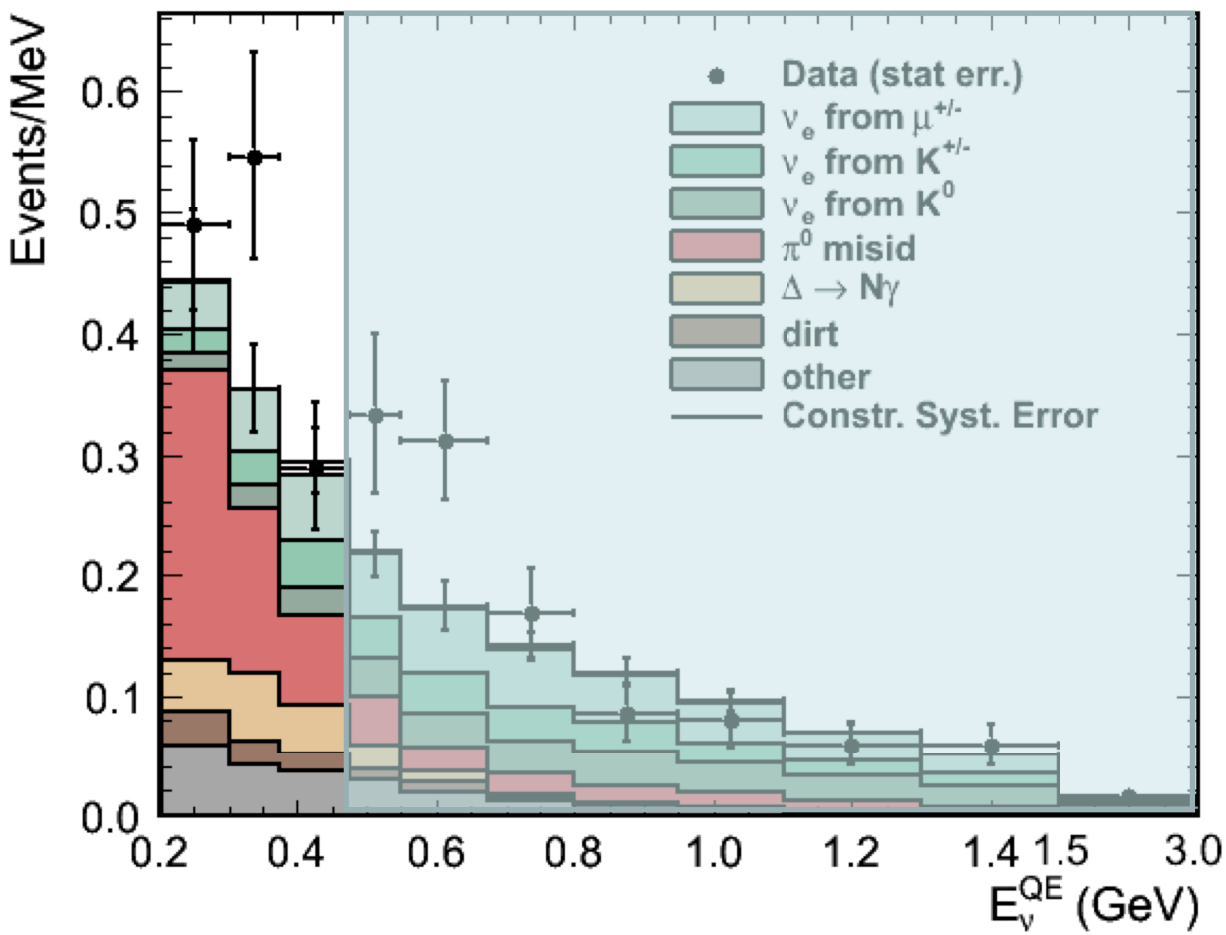

What are these excess events?

Need a new experimental technique to address the question...

Capability to resolve particle interactions:
reduce backgrounds, identify and
improve signal

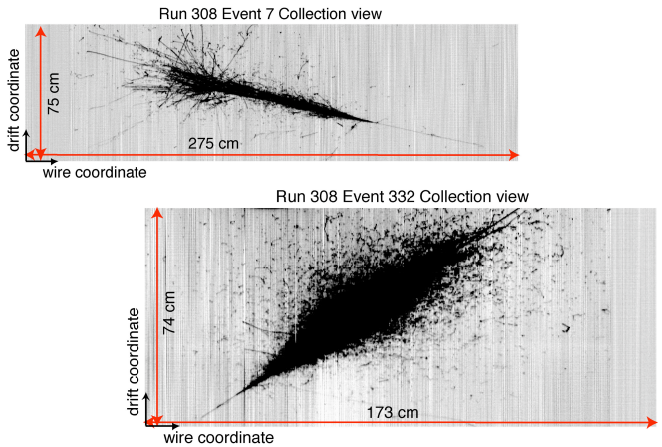

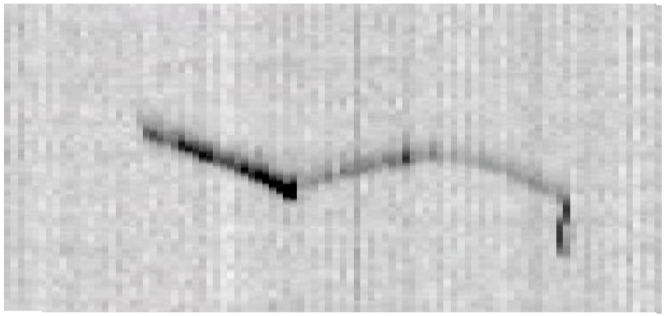

Liquid Argon Time Projection Chamber

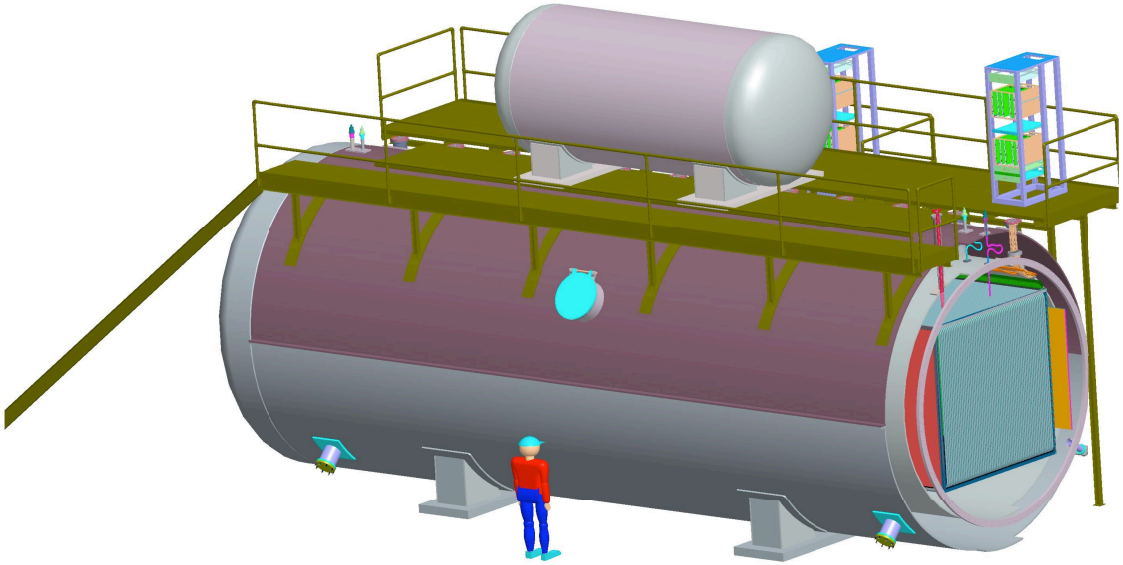

The MicroBooNE Experiment: 70 ton fiducial volume LArTPC to be exposed to the Booster Neutrino beam and NuMI Neutrino Beams at Fermilab

Sensitivity to the low energy excess

MicroBooNE's LArTPC detection technique extremely powerful

- e/γ separation capability removes ν_μ induced single γ backgrounds
- electron neutrino efficiency: ~x2 better than MiniBooNE
- sensitivity at low energies (down to tens of MeV compared to 200 MeV on MiniBooNE)

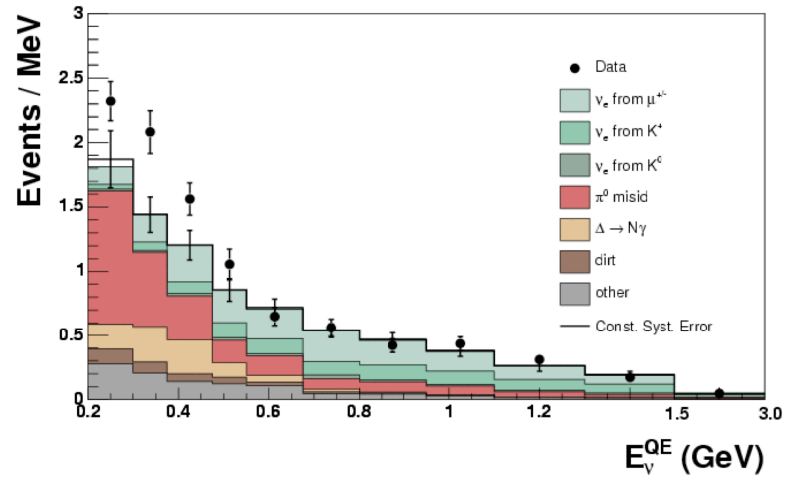

Translates to 5σ sensitivity if excess is ν_es

4σ if excess is γs

(Micro = detector ~x5 smaller than MiniBooNE can address low energy excess)

Inability to identify excess as ν_es or γs illustrates the need for the best detectors for ν_e appearance physics

→ the strength of the LAr detection technique

Important for MicroBooNE and for LAr program beyond!

MicroBooNE Physics and Development Goals

MicroBooNE Physics

- MiniBooNE low energy excess
- Suite of low energy cross section measurements

MicroBooNE LAr TPC
Development Goals

- Demonstrate photon – electron identification
- Develop cold electronics
- Implementation of cold electronics
  Develop TPC readout design and cryogenics
- Purity: Test of GAr purge in large, fully instrumented vessel
- Refine sensitivity estimates for next generation detectors
- Test ability to run on surface
- Develop tools for analysis
- Develop cost scaling model for larger detectors

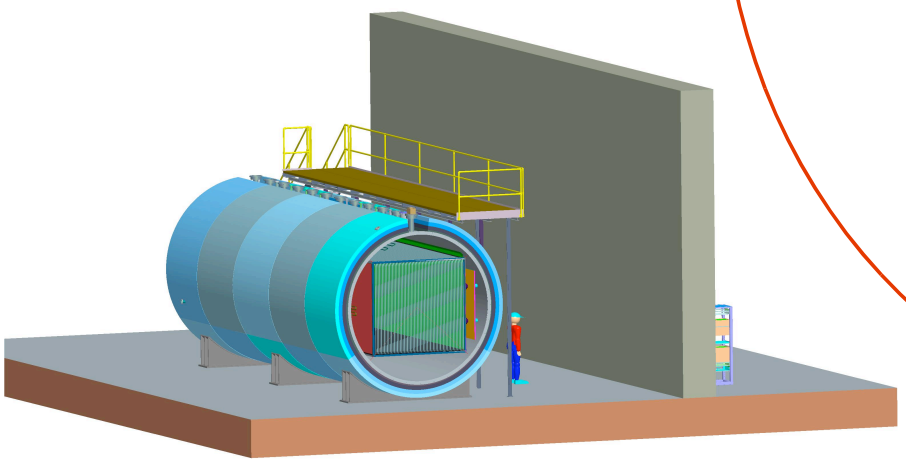

TPC design team: BNL Instrumentation division

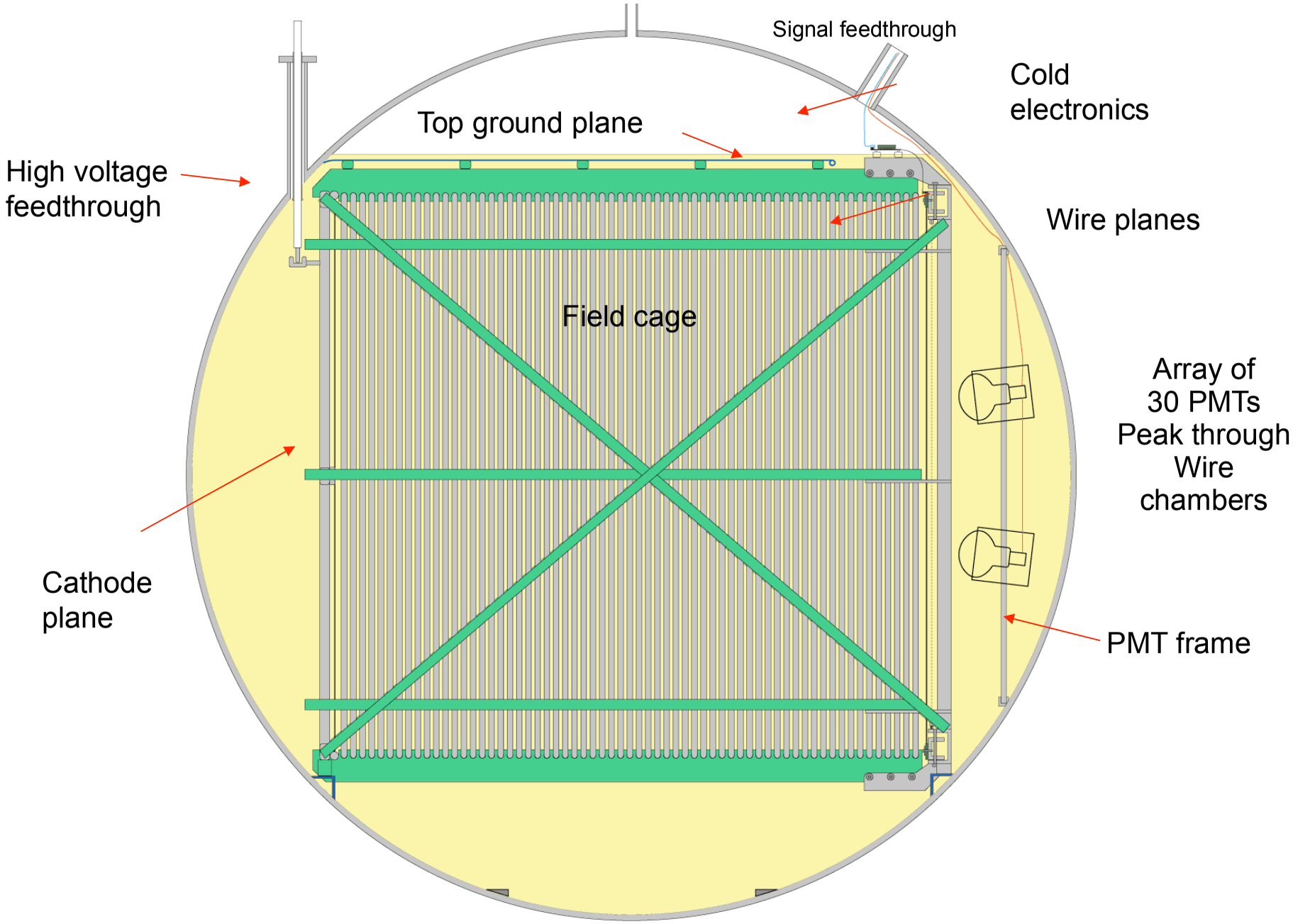

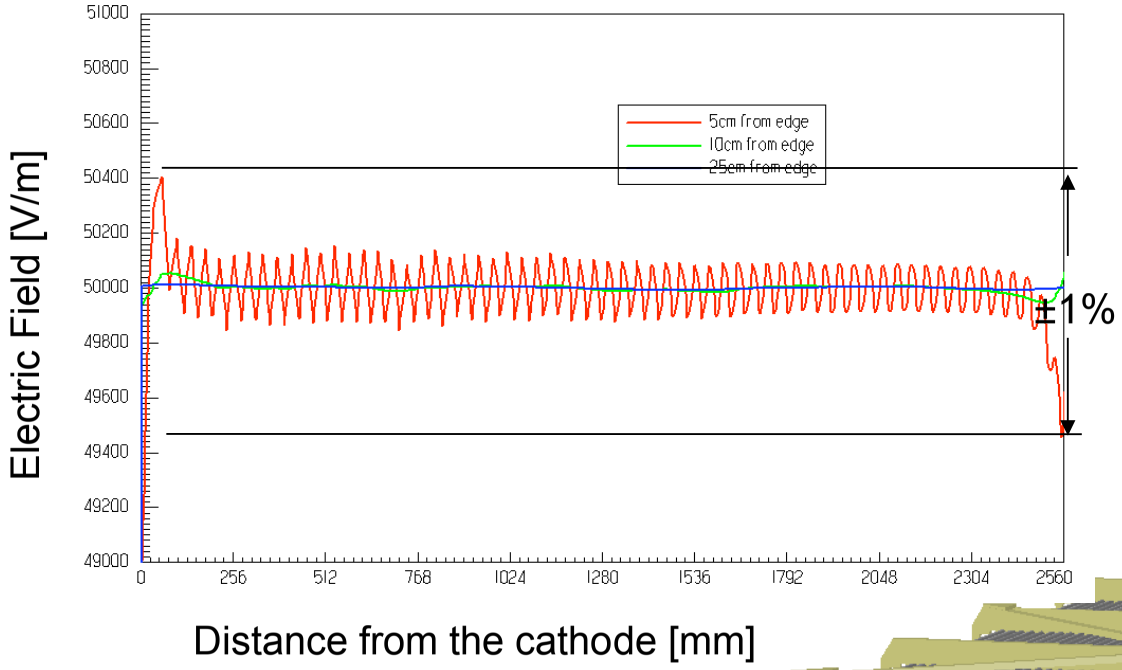

Field cage tubing steps voltage down from -128k

Field is nearly uniform out to 5cm from tubing

"NanoBooNE" mechanical prototype constructed

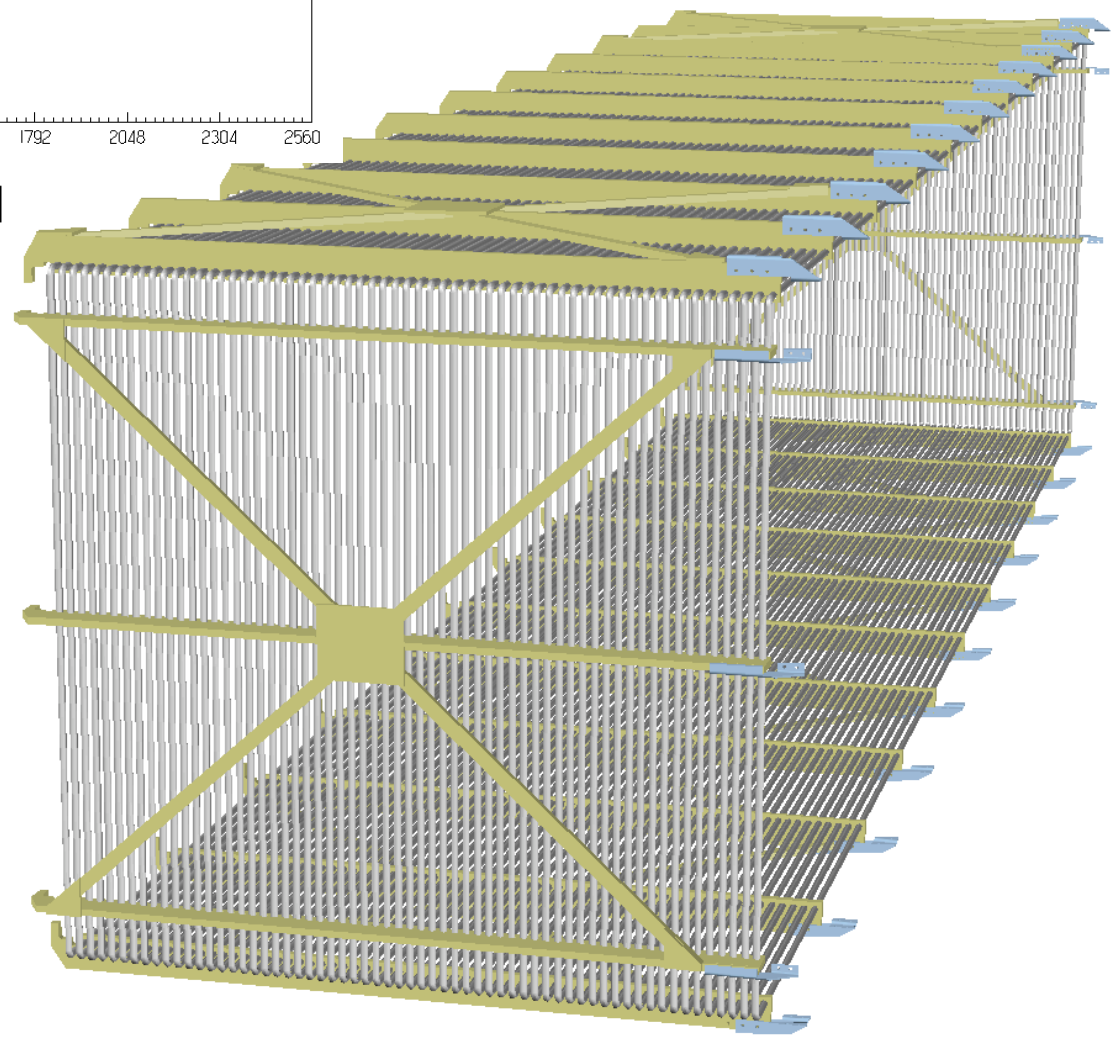

Three wire planes (U,V,Y) readout ionization electrons

- 3mm wire pitch
- Y: vertical, U,V: +/- 60 degrees to Y
- Nominal wire length: Y: 2.5m, U,V: 5m
- 3456 Y wires, 2400 each U,V wires
- Wire material is stainless steel coated with copper and a gold flash: high breakload, low resistance.
- Wire attachment via ferrule attached to wire carrier boards
- Fully automated wire winding machine

Rotating head of the winding machine

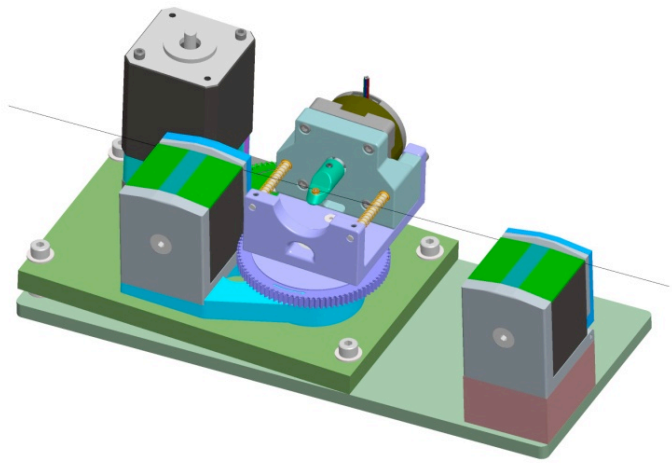

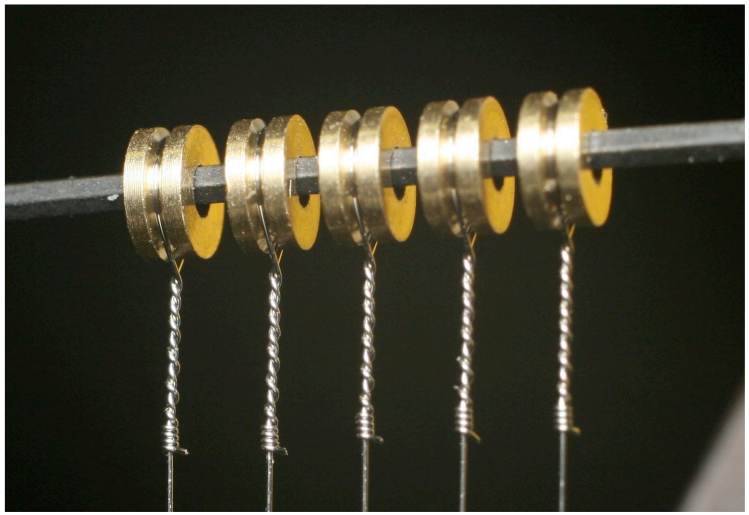

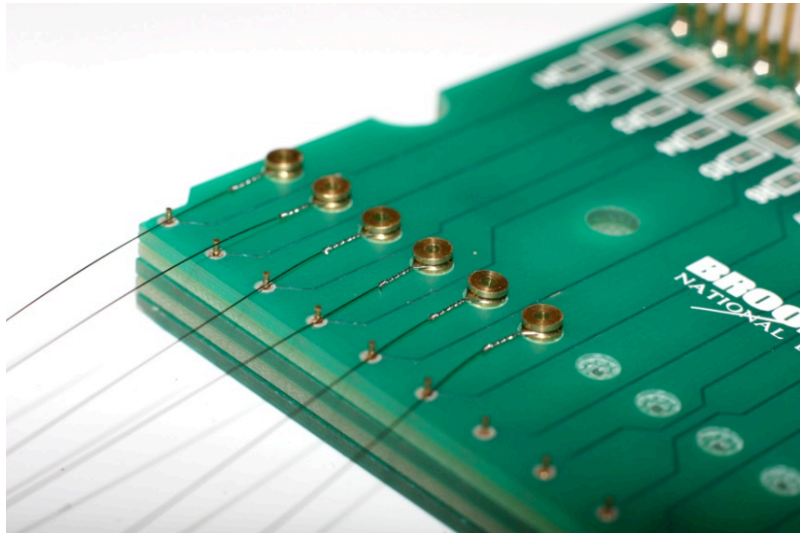

Cryostat Design: "Warm" vs "Cold" Electronics

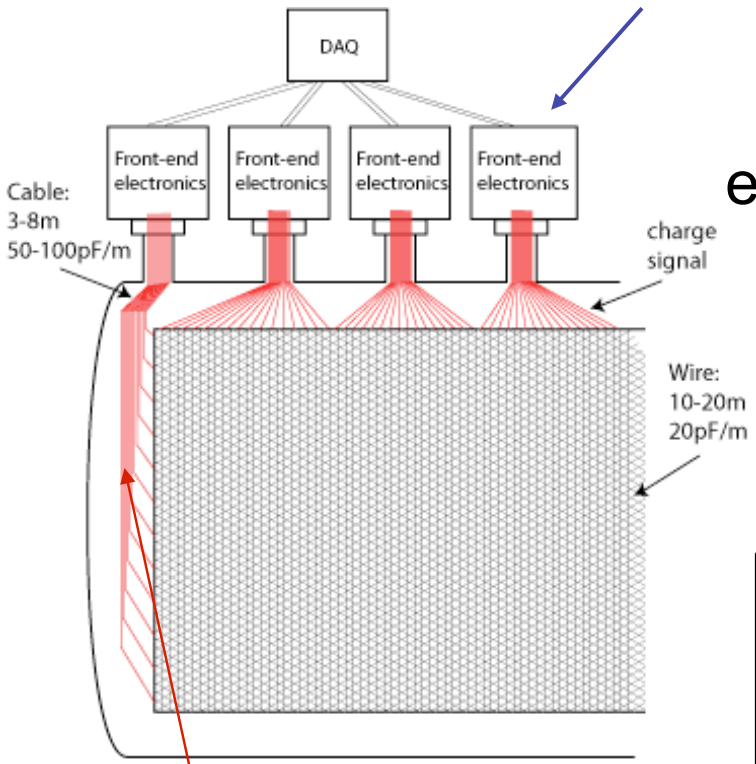

Electronics: Cold front end multiplexed inside the cryostat

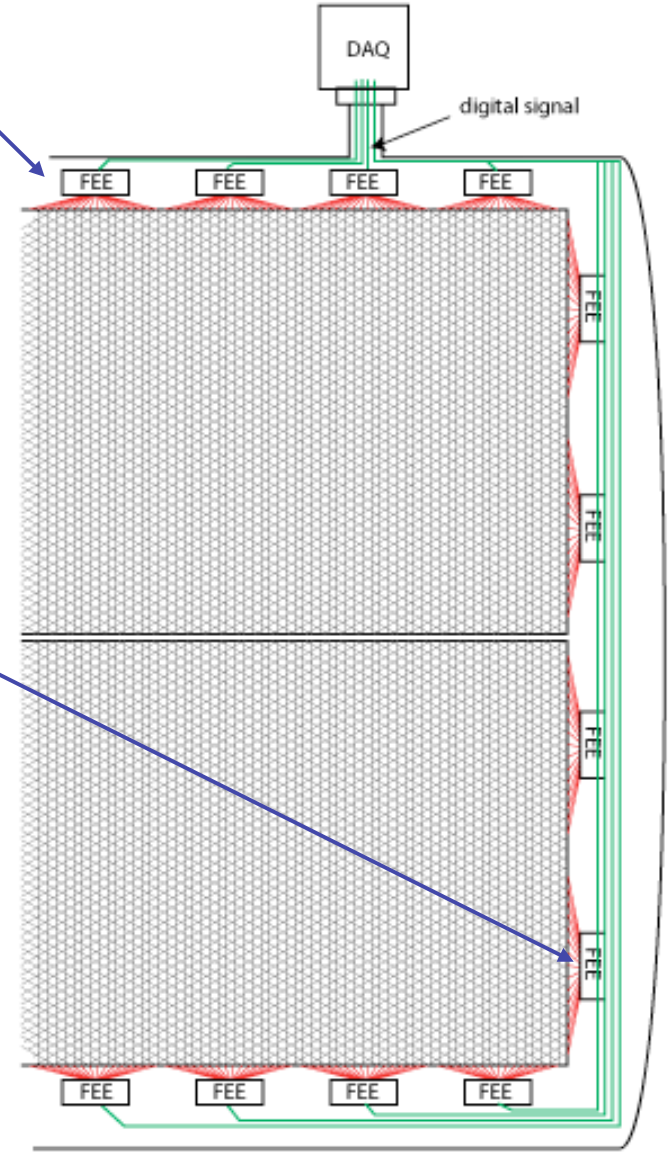

Signal cable lengths increasing to >10-20 meters for detector fiducial volume > 1kton resulting in high capacitance and high noise.

Cold electronics decouples the electrode and cryostat design from the readout design: *noise independent of the fiducial volume.*

Cold Electronics: Low noise with pre-amps at wire readout and multiplexing for minimal cables to outside of cryostat.

MicroBooNE readout electronics design
Conceptual design: Cold electronics in Gar
Preliminary design: recently adopted CMOS pre-amp in LAr

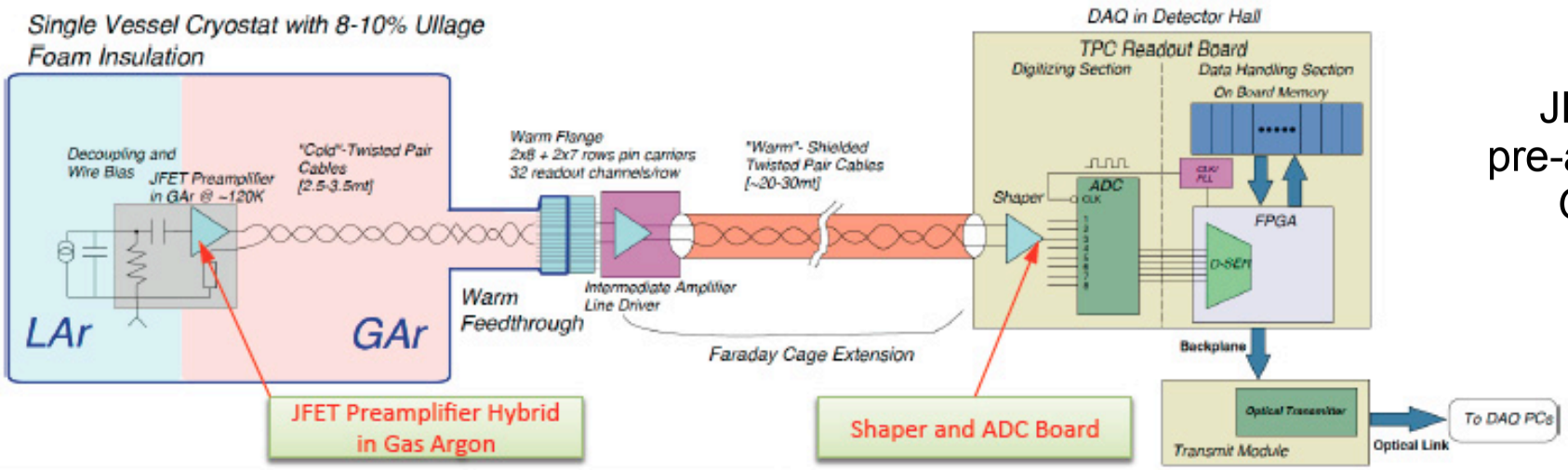

JFET pre-amp in GAr

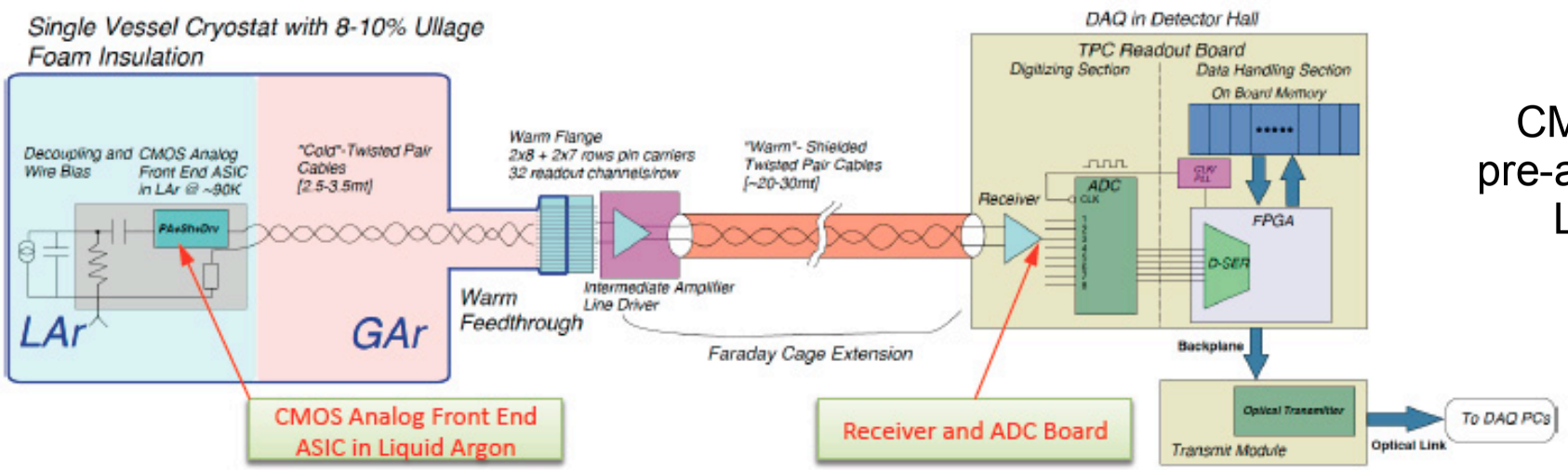

CMOS pre-amp in LAr

LAr20 Front End Electronics Functional Outline

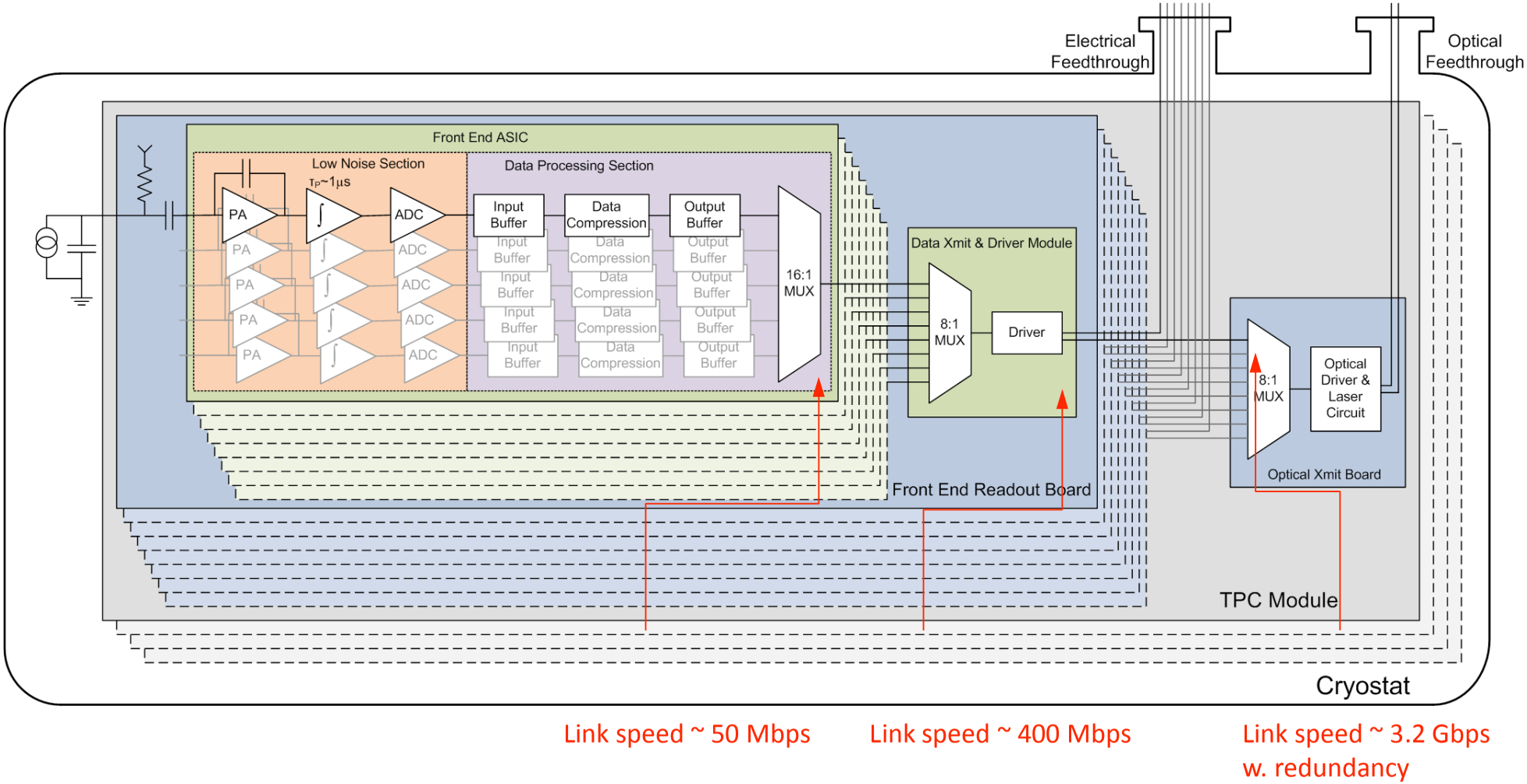

Link speed ~ 50 Mbps

Link speed ~ 400 Mbps

Link speed ~ 3.2 Gbps w. redundancy

Next step under development with Radeka team: Front end ASIC with signal multiplexing in LAr for massive detectors (Lar20) for the LBNE program

Liquid-Argon Time Projection Chambers

Outlook of R&D Program in the US

Active Volume

Yale TPC & Bo

Yale TPC: Dismantled
Bo: Operational

0.00002 kton

15 x

ArgoNeuT

Operational
Physics: Measure neutrino-argon cross sections

0.0003 kton

330 x

MicroBooNE

Construction begins 2010
Physics: Investigate low-energy neutrino interactions

0.1 kton

4 x 50 x

LAr TPC for LBNE

R&D in progress
Physics: Measure neutrino oscillations at 1,000+ km

20 kton

Final goal

Replicate proven technology
Physics: Search for CP violation in neutrino sector

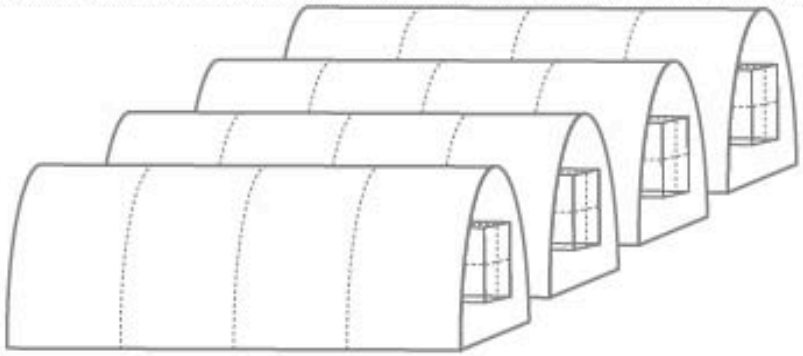

N x 20 kton

Its been a pleasure and an honor working with Veljko and his team on MicroBooNE

I look forward to continued collaboration on MicroBooNE and development of LAr detectors for neutrino physics in the future!