Stony Brook University

# A Brief Introduction To Calorimetry In GEANT4

Nils Feege

Stony Brook Local Meeting
October 13, 2014

# GEANT4- A Toolkit for the Simulation of the Passage of Particles Through Matter

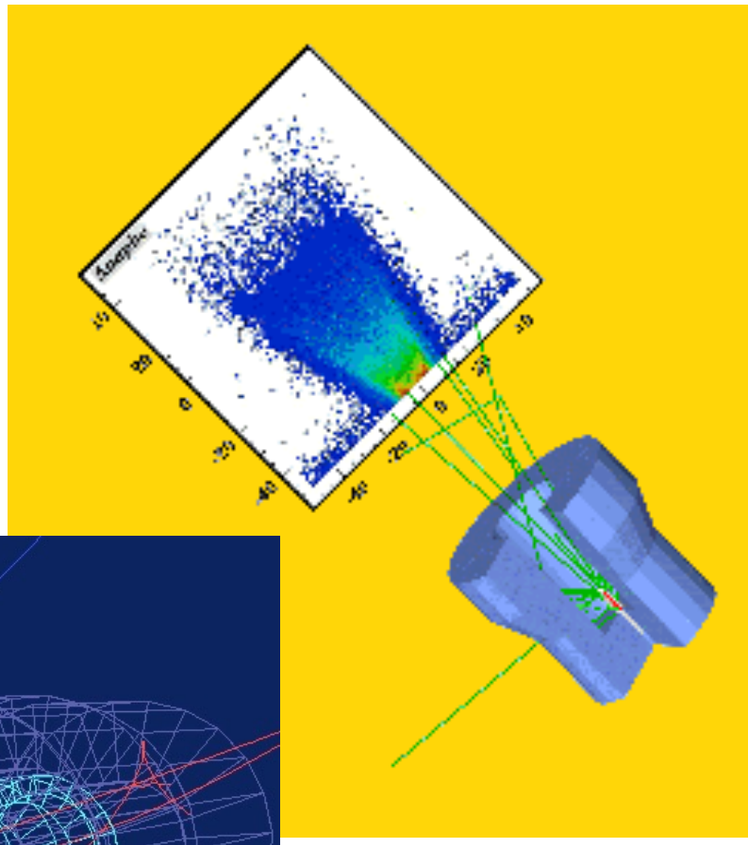

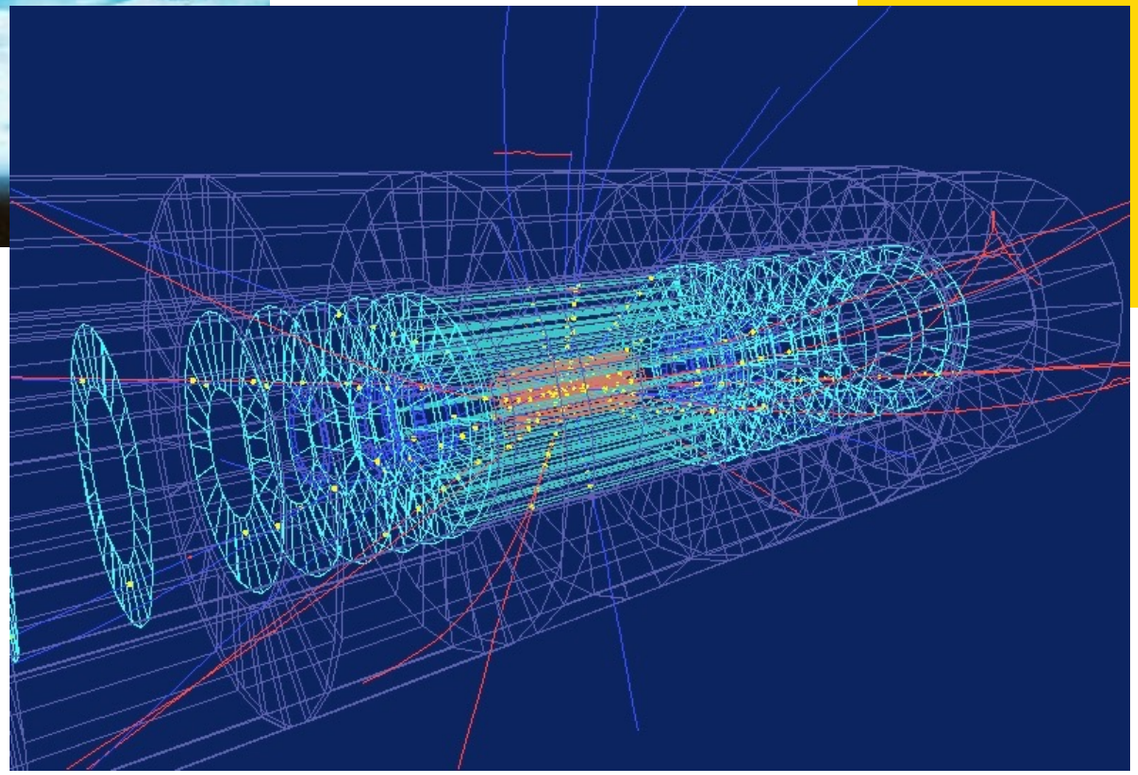

# Recipe for a GEANT4 Simulation

1- Geometry / Material Definition

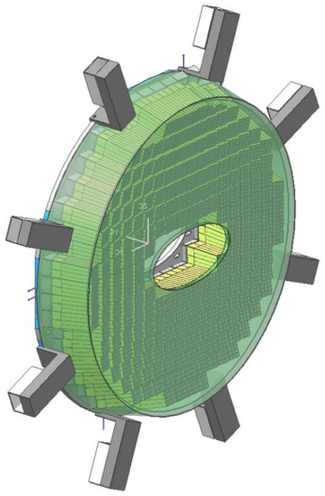

2- Physics List

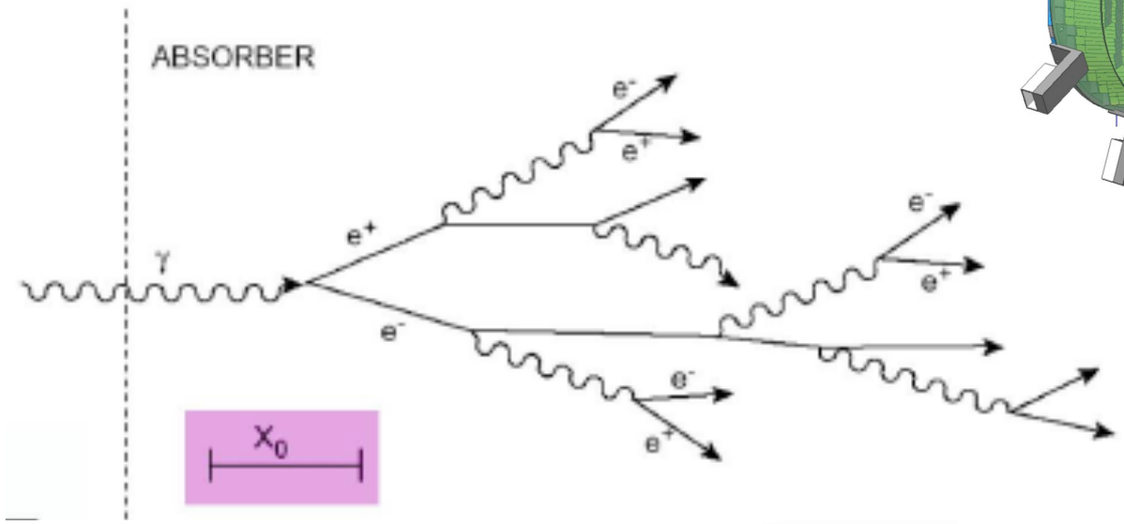


3- Primary Generator

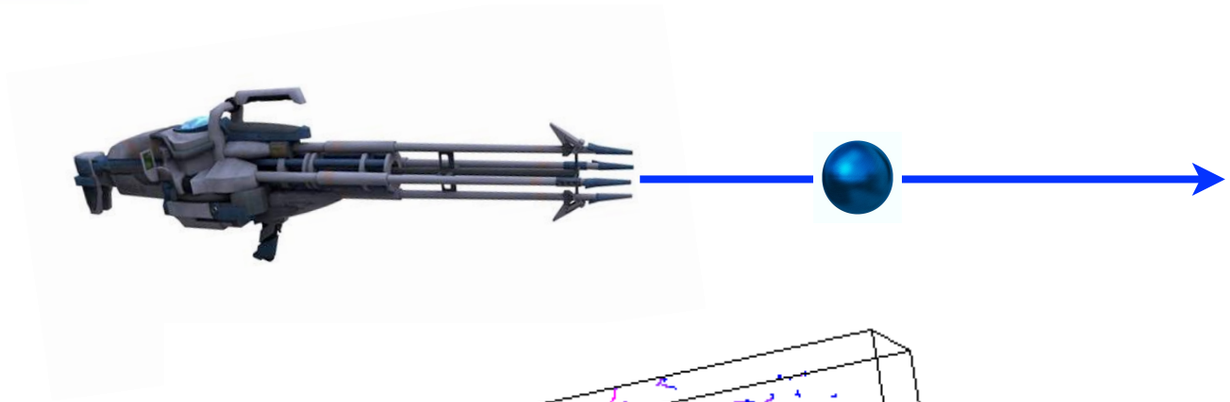

4- Detector Response

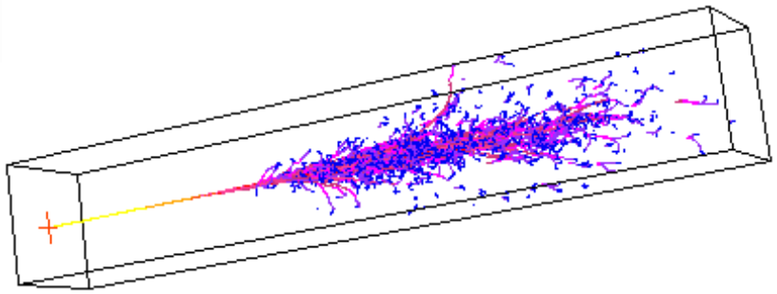

# Geant4 Example B4

*Lead / liquid Argon sampling calorimeter*

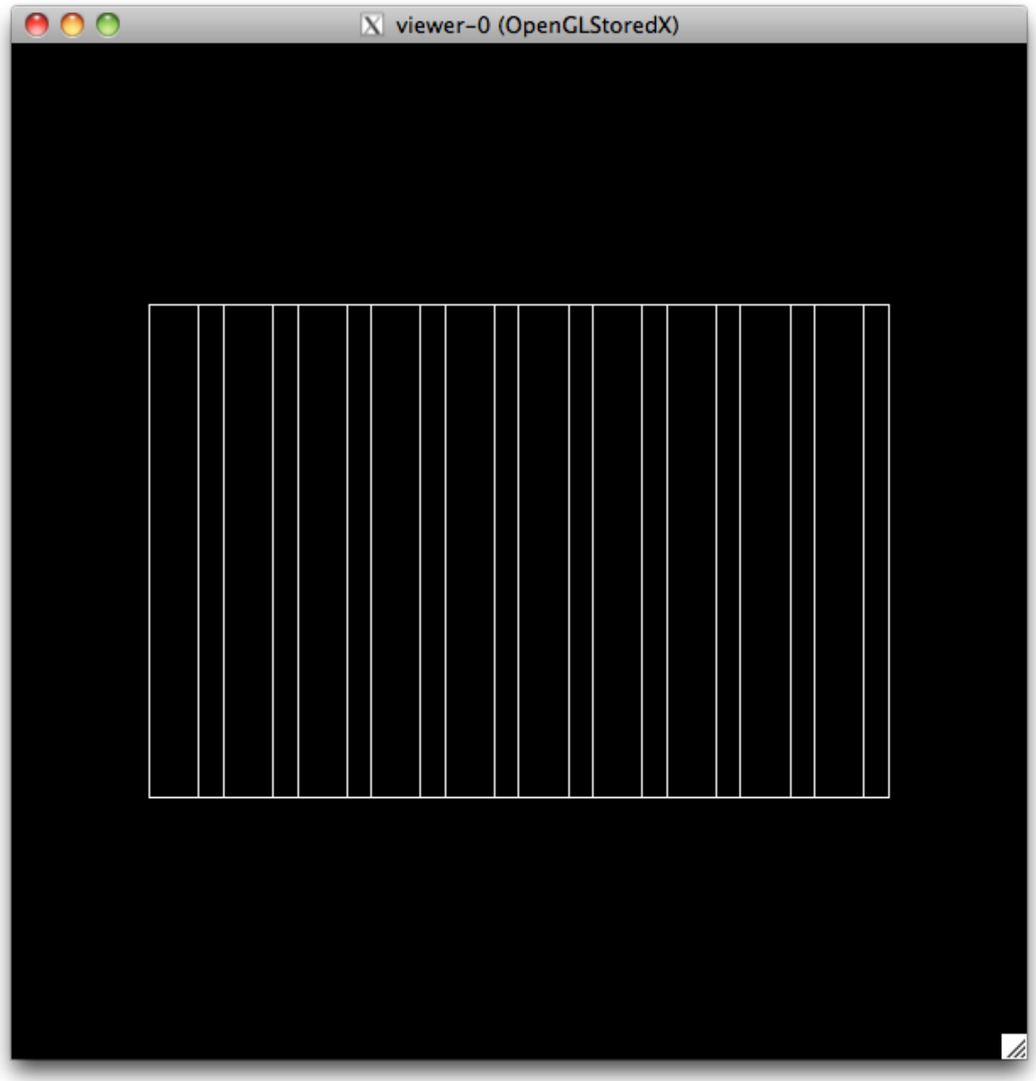


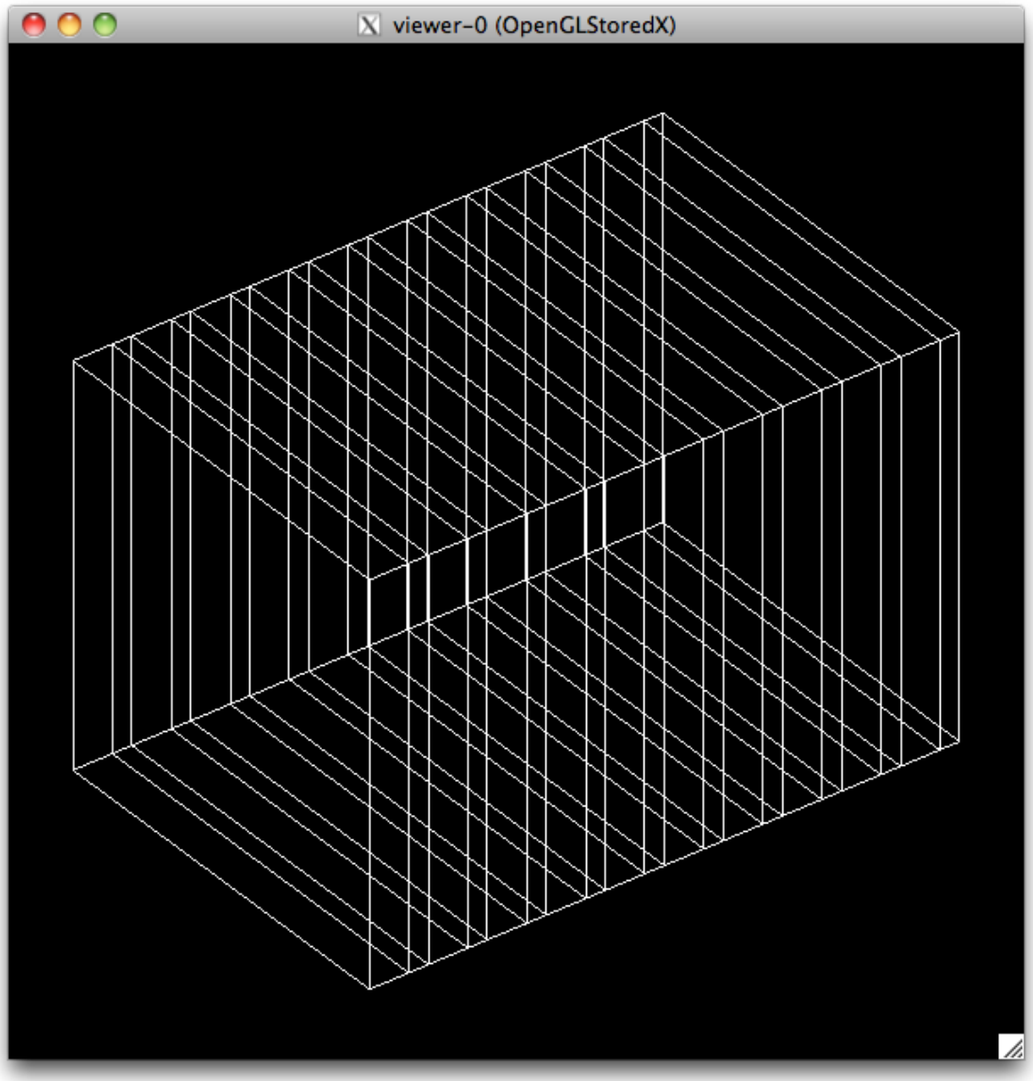


```
cd B4-build/B4a
./exampleB4a
```

```
/vis/viewer/set/viewpointThetaPhi 60. -140.
```

# Geant4 Example B4

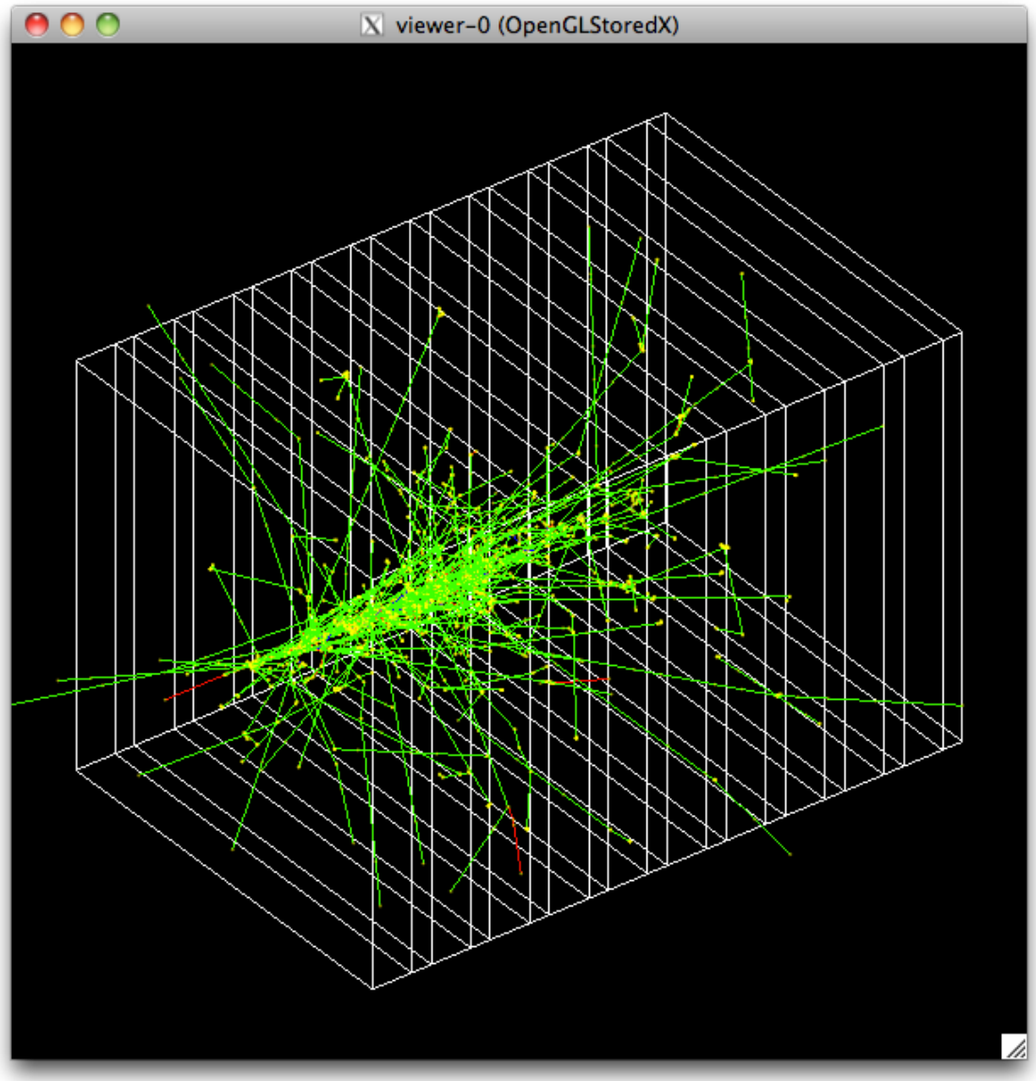


/gun/particle e-
/gun/momentum 0 0 1 GeV
/run/beamOn 1

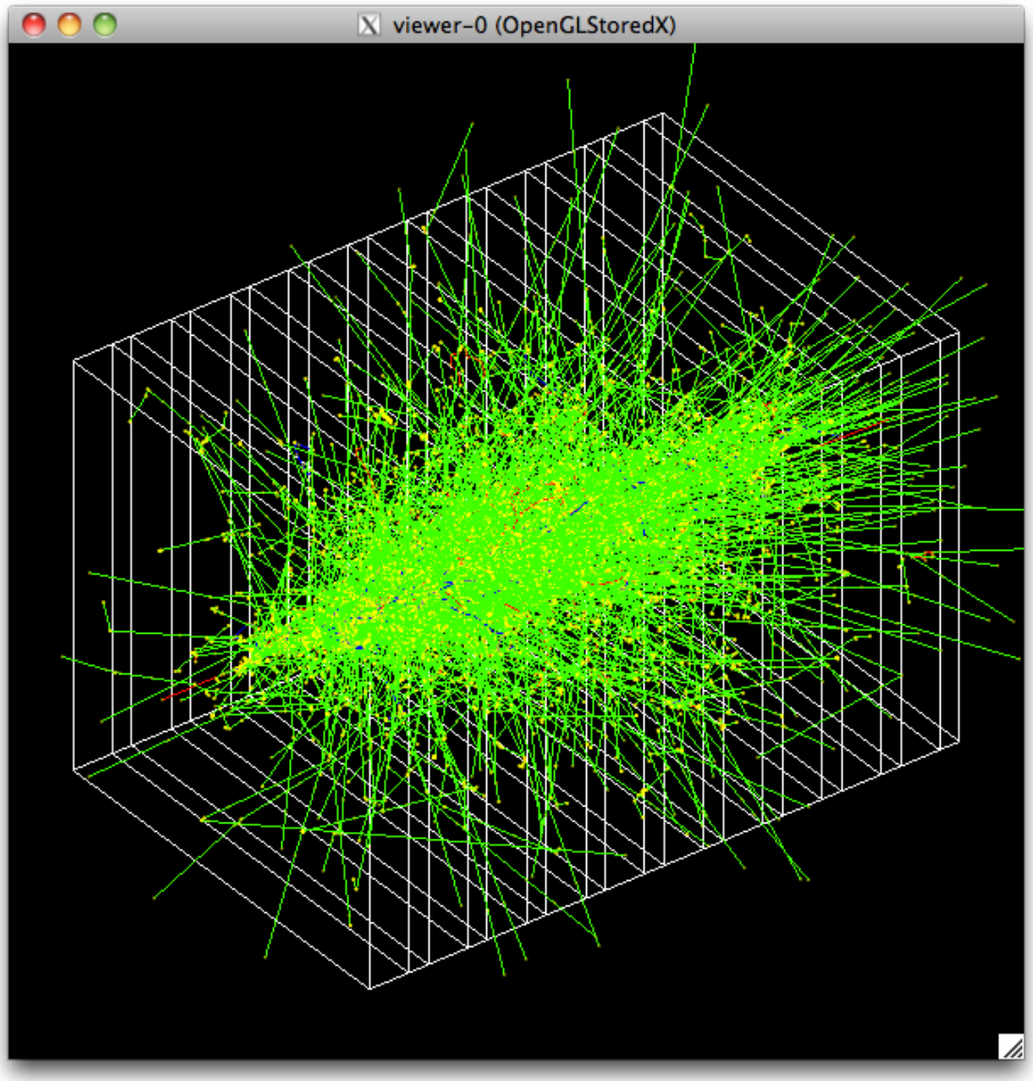


/gun/momentum 0 0 10 GeV
/run/beamOn 1

# Geant4 Example B4

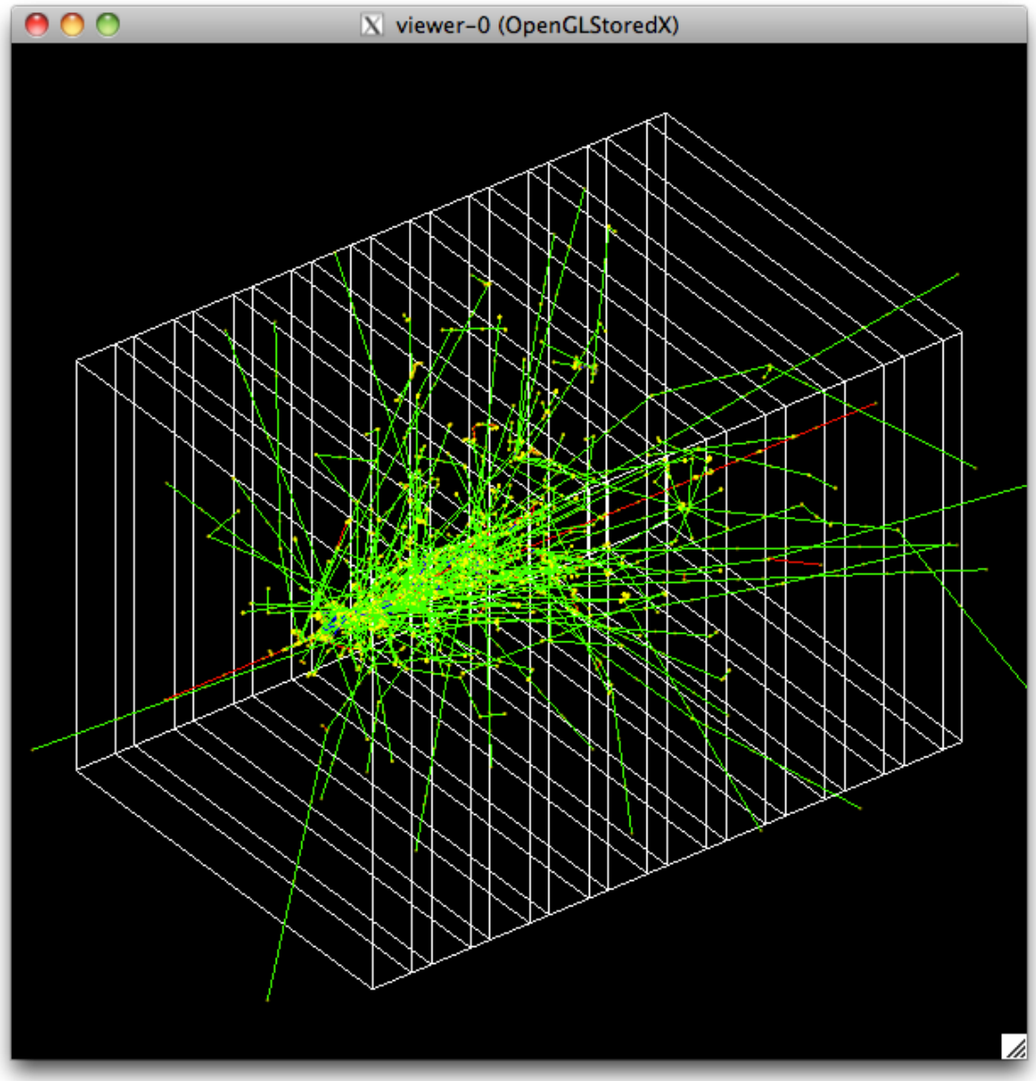


/gun/particle pi-
/run/beamOn 1

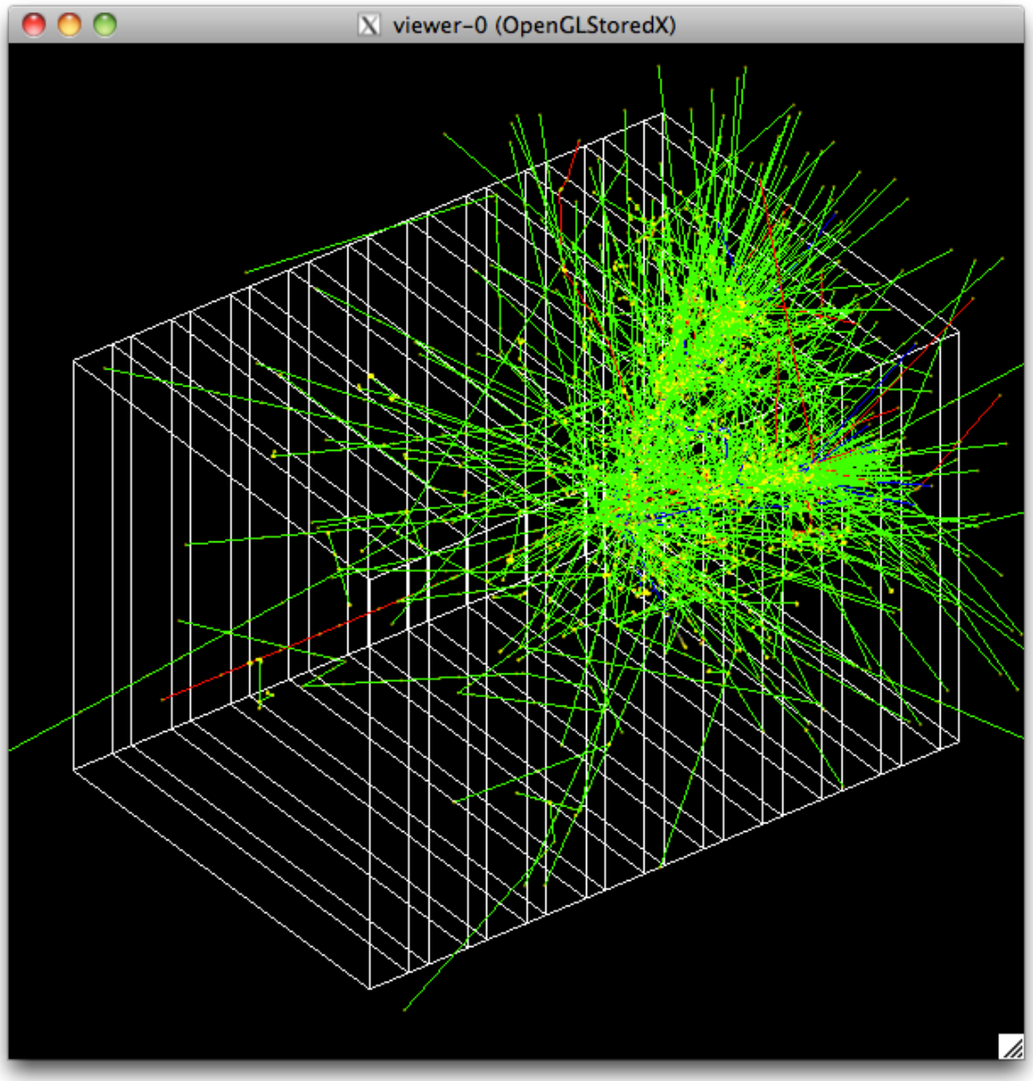


/run/beamOn 1

# Crystal Electromagnetic Calorimeter

- Array of lead tungstate (PbWO4) crystals, similar to PANDA
- Position in z: -108 cm
- Length in z: 9 cm
- Pseudo-rapidity coverage: -1.2 to -4.5

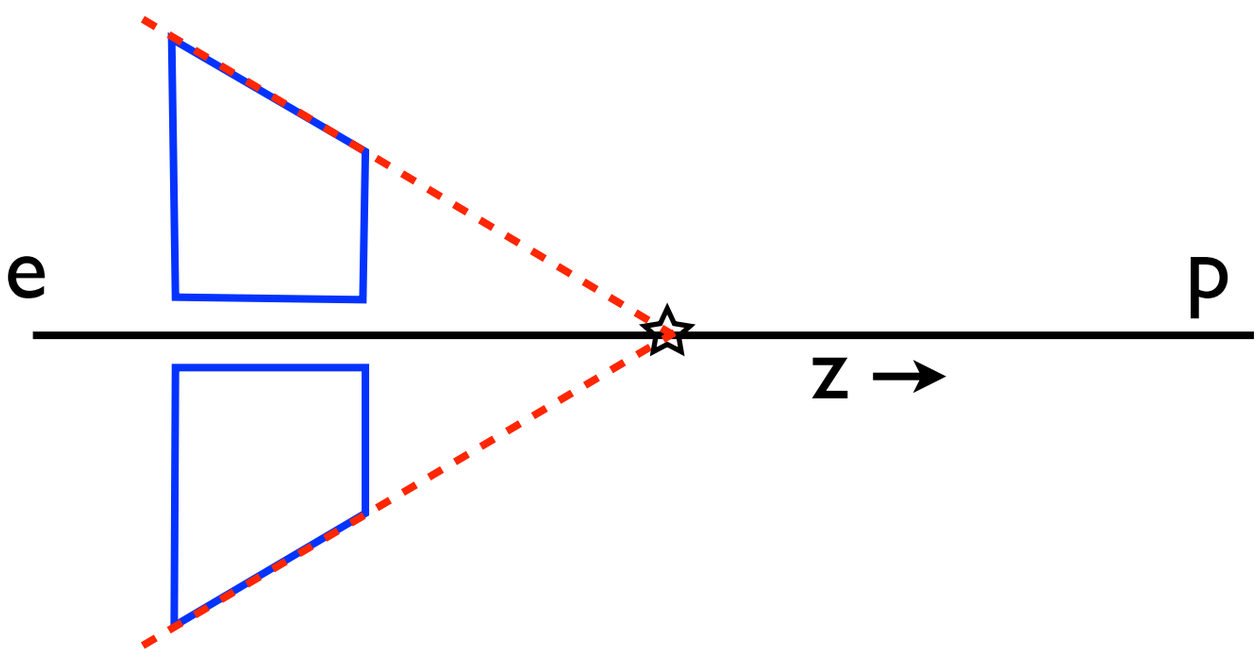


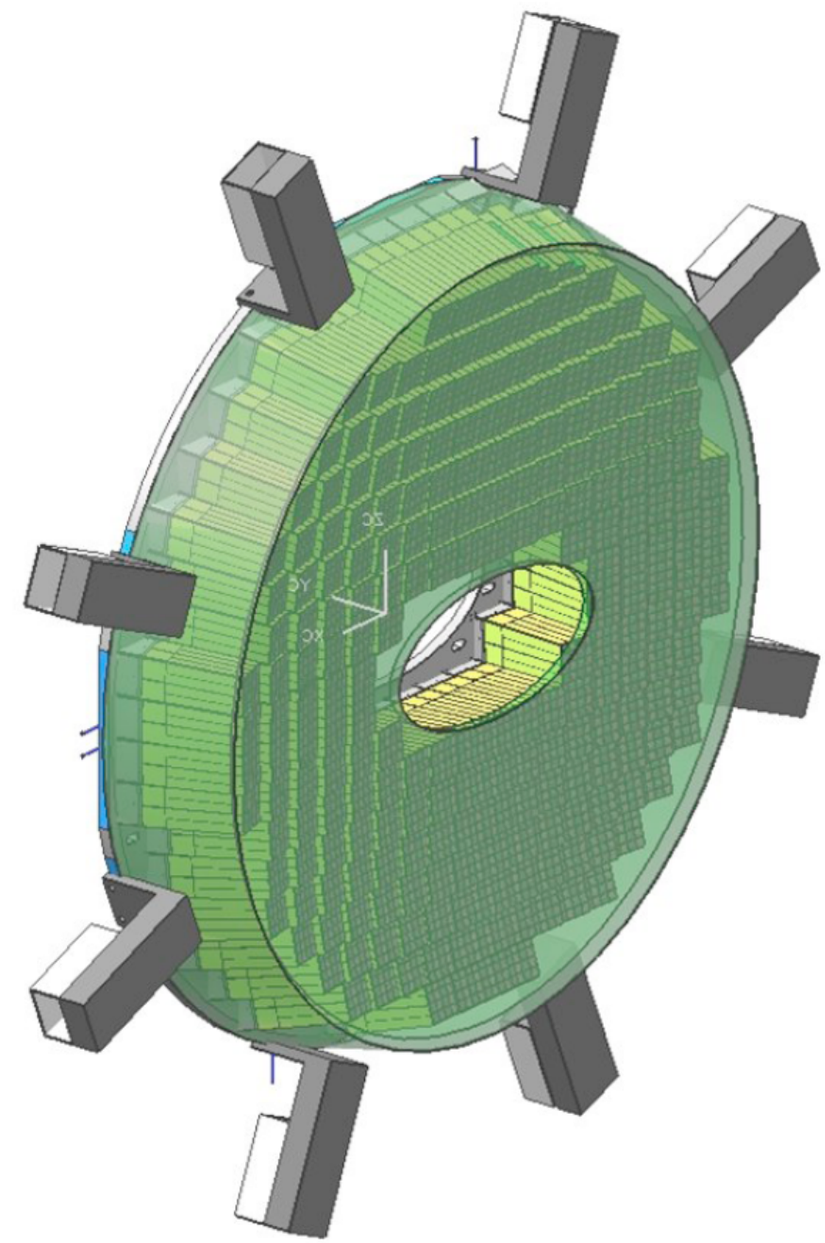

http://www.phenix.bnl.gov/phenix/WWW/publish/dave/PHENIX/ePHENIX_LOI_09272013.pdf

# Lead-scintillator Electromagnetic Calorimeter

- 2/3 Tungsten + 1/3 Scintillator
- Position in z: 315 cm
- Length in z: 10 cm
- Pseudo-rapidity coverage: 1.15 to 4

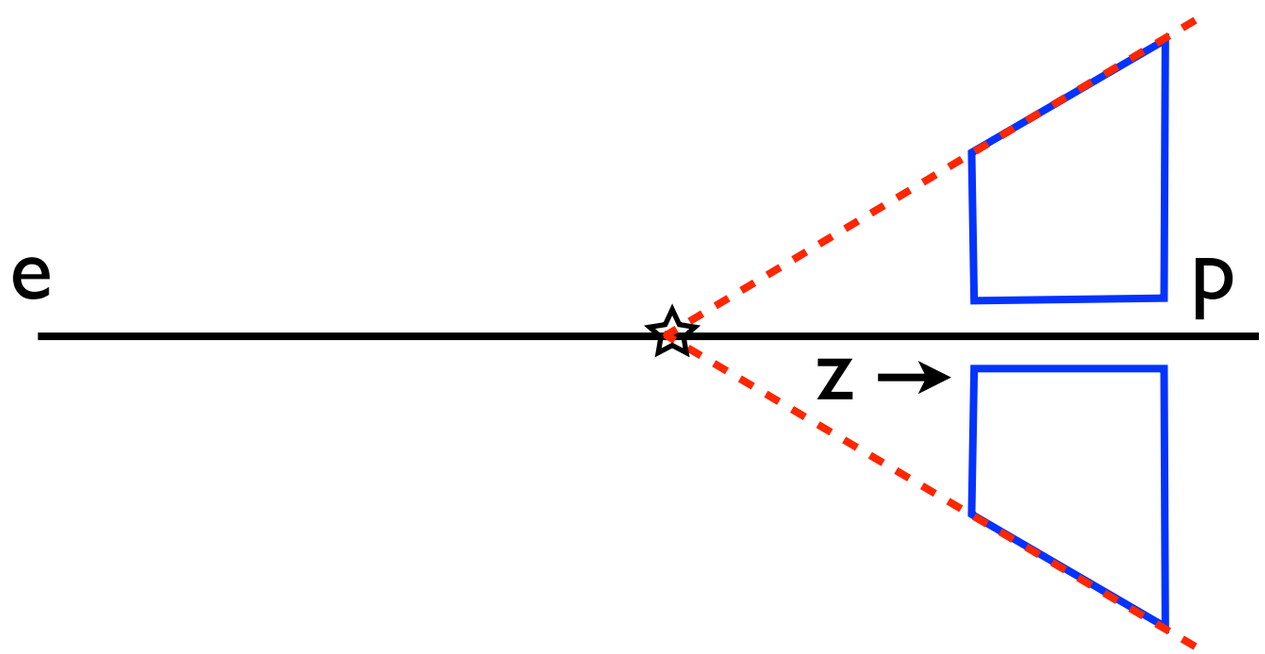


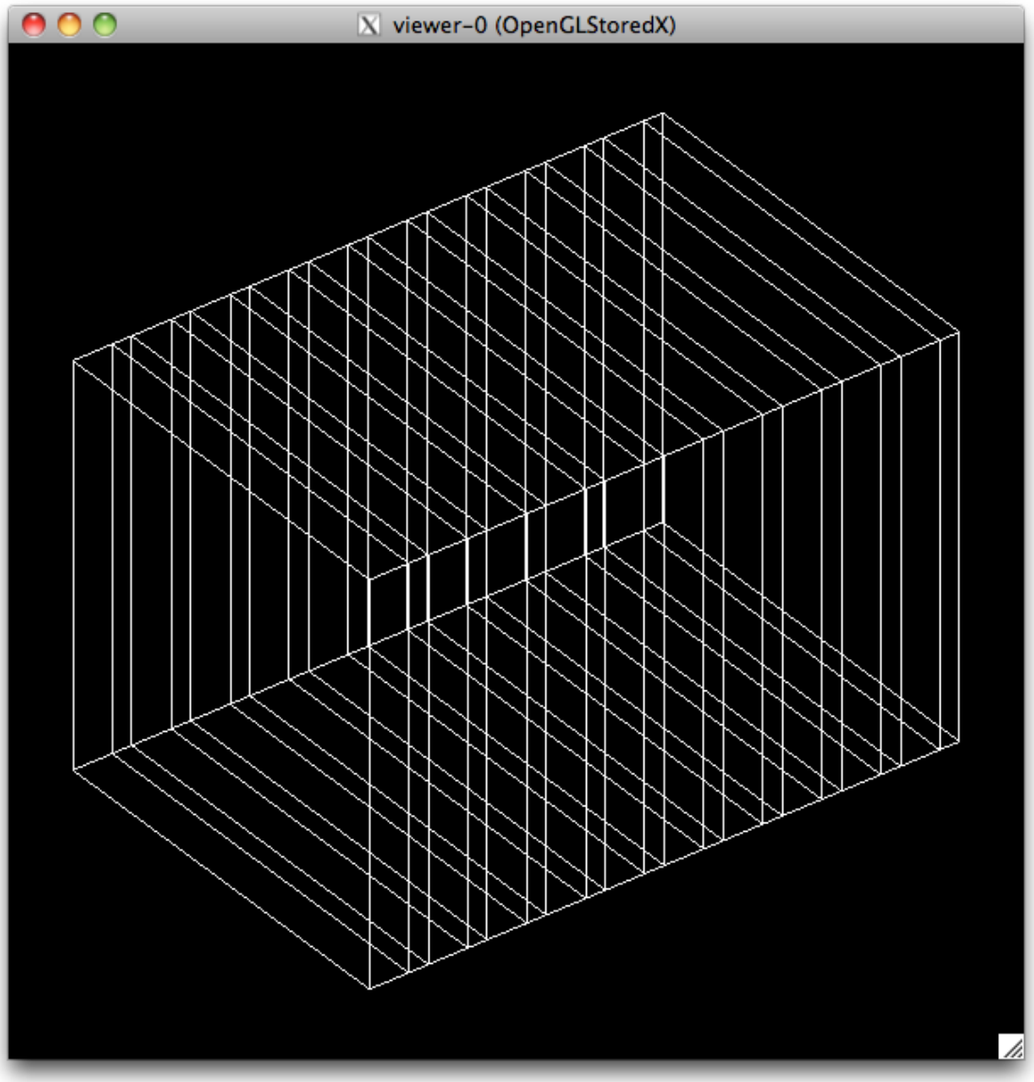

# Recommended Ressources

Main Geant4 page
http://geant4.cern.ch/

Getting started
http://geant4.cern.ch/support/gettingstarted.shtml

Application Developer Guide
http://geant4.web.cern.ch/geant4/UserDocumentation/UsersGuides/ForApplicationDeveloper/html/

General user support / documentation
http://geant4.cern.ch/support/index.shtml

Doxygen documentation
http://www-geant4.kek.jp/Reference/

B4DetectorConstruction.hh

```
#ifndef B4DetectorConstruction_h
#define B4DetectorConstruction_h 1

#include "G4VUserDetectorConstruction.hh"
#include "globals.hh"

class G4Box;
class G4VPhysicalVolume;
class G4UniformMagField;
class G4GenericMessenger;

/// Detector construction class to define materials and geometry.
/// The calorimeter is a box made of a given number of layers. A layer consists
/// of an absorber plate and of a detection gap. The layer is replicated.
///
/// Four parameters define the geometry of the calorimeter :
///
/// - the thickness of an absorber plate,
/// - the thickness of a gap,
/// - the number of layers,
/// - the transverse size of the calorimeter (the input face is a square).
///
/// In addition a transverse uniform magnetic field is defined in
/// SetMagField() method which can be activated
/// via a command defined using G4GenericMessenger class:
/// - /B4/det/setMagField value unit


class B4DetectorConstruction : public G4VUserDetectorConstruction
{
public:
  B4DetectorConstruction();
  virtual ~B4DetectorConstruction();

public:
```

B4DetectorConstruction.hh

```
class B4DetectorConstruction : public G4VUserDetectorConstruction
{
public:
  B4DetectorConstruction();
  virtual ~B4DetectorConstruction();

public:
  virtual G4VPhysicalVolume* Construct();

  // set methods
  //
  void SetMagField(G4double fieldValue);

  // get methods
  //
  const G4VPhysicalVolume* GetAbsorberPV() const;
  const G4VPhysicalVolume* GetGapPV() const;

private:
  // methods
  //
  void DefineMaterials();
  G4VPhysicalVolume* DefineVolumes();

  // data members
  //
  G4GenericMessenger*  fMessenger; // messenger
  G4UniformMagField*   fMagField;  // magnetic field

  G4VPhysicalVolume* fAbsorberPV; // the absorber physical volume
  G4VPhysicalVolume* fGapPV;      // the gap physical volume

  G4bool  fCheckOverlaps; // option to activate checking of volumes overlaps
};
```