TPC Mechanical Engineering

sPHENIX Time Projection Chamber
John Brodowski
Mechanical Engineer
Brookhaven National Laboratory

sPHENIX Tracker Review
TPC Breakout Session
September 7, 2016

Time Projection Chamber (TPC)

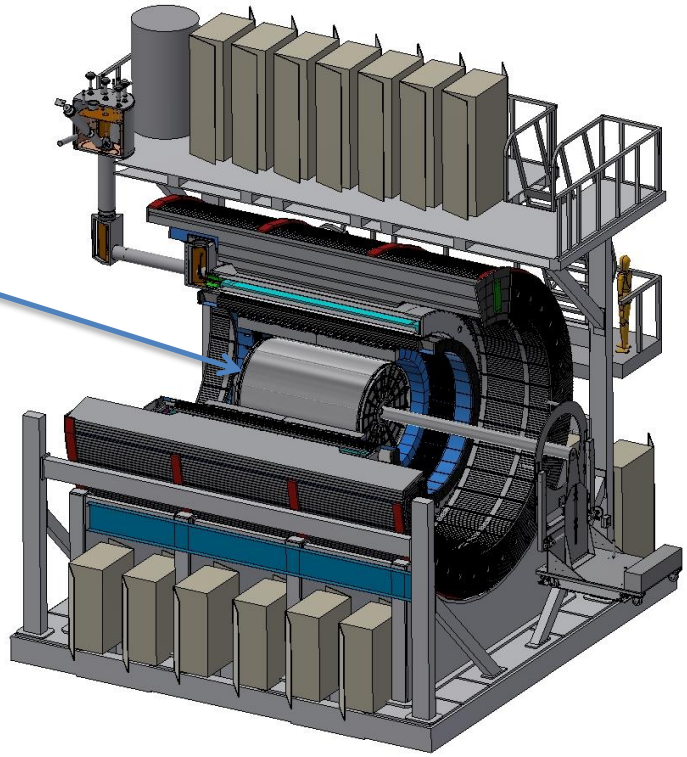

TPC Mechanical Engineering

TPC Assembly

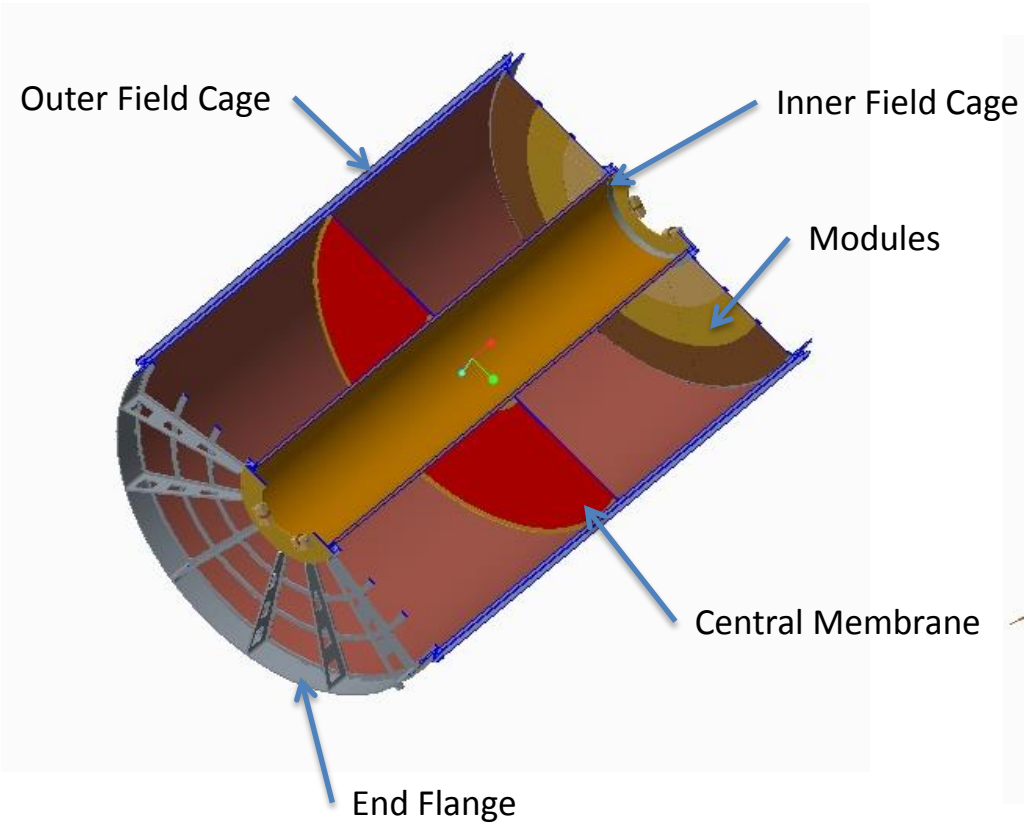

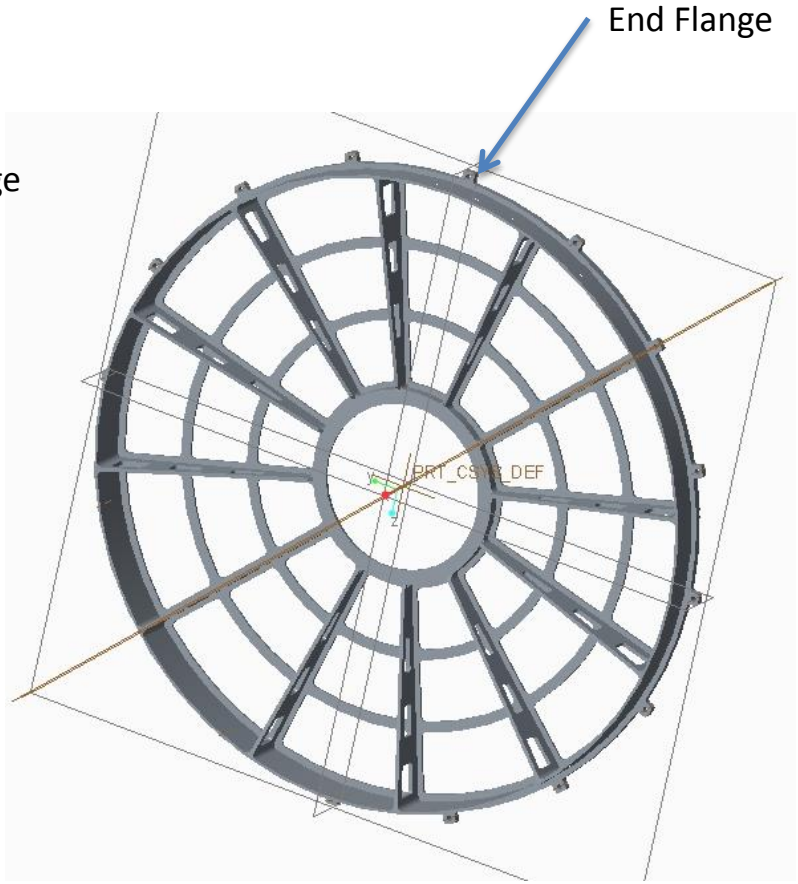

Aluminum TPC End Flange and Membrane Assembly

TPC Mechanical Engineering

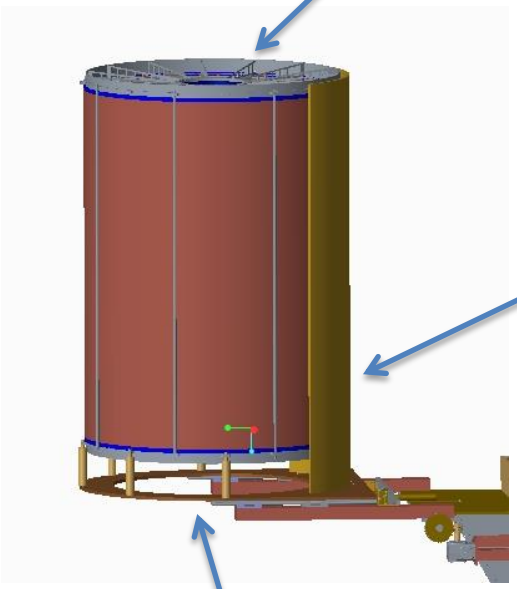

Assemble Upright and Rotate to Horizontal Position for Insertion Into Detector.

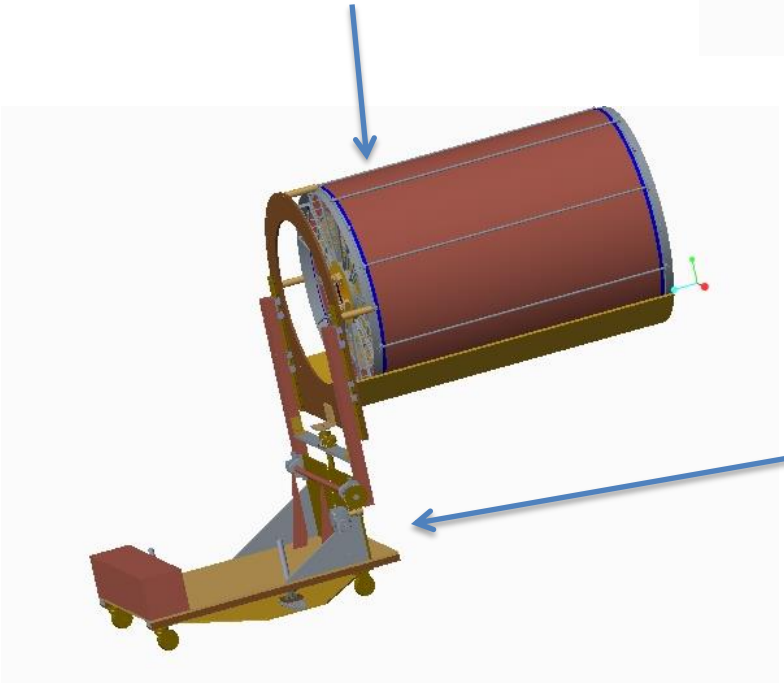

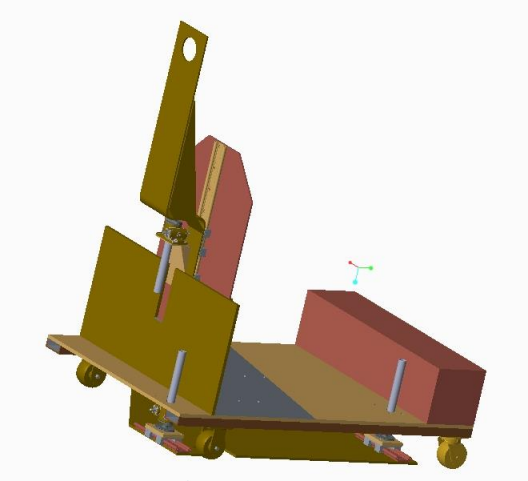

Transporter

TPC Mechanical Engineering

3x12 Module Array

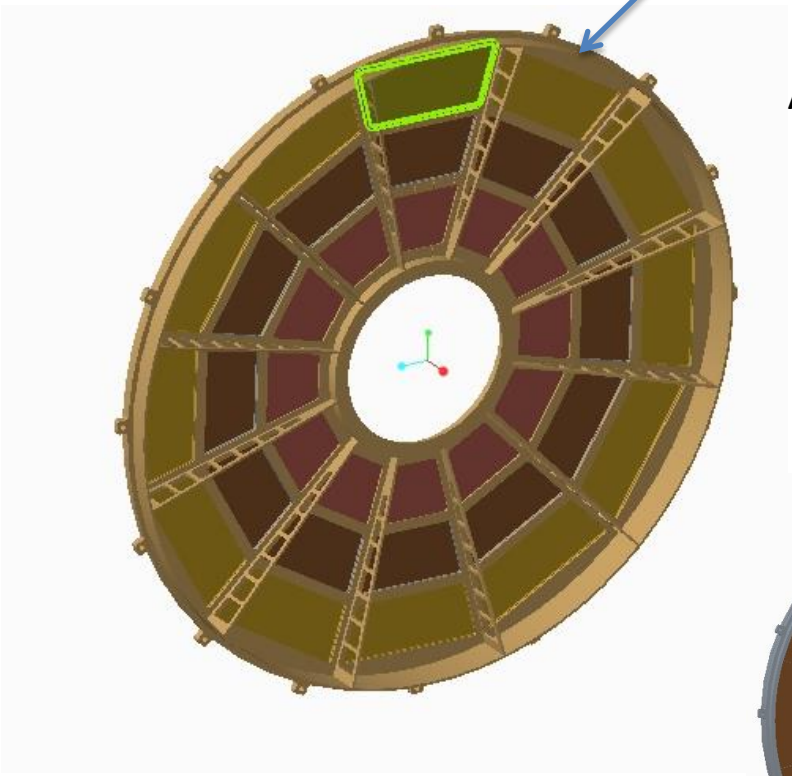

Aluminum End Flange

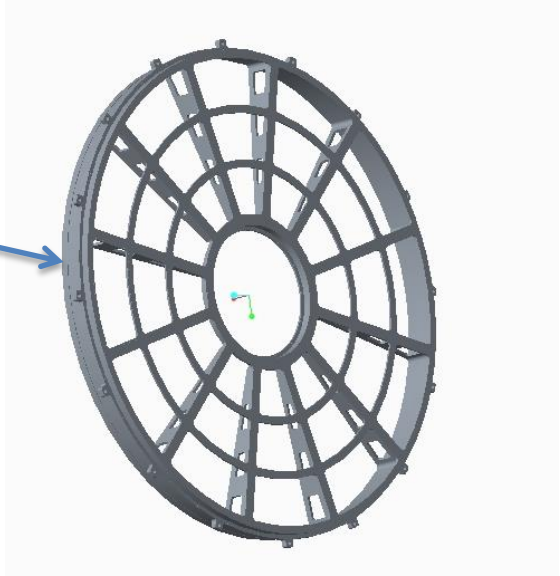

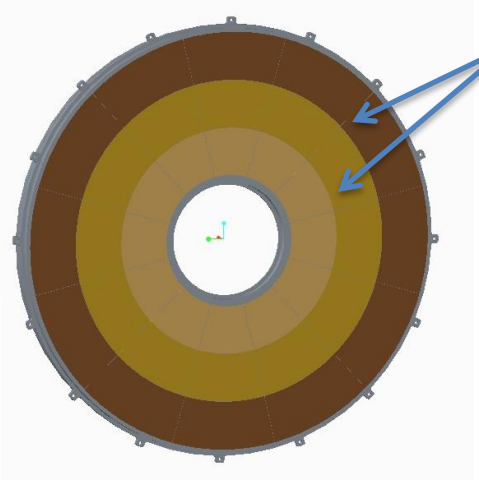

Spacing between modules – 0.06 in. Typ.

TPC Mechanical Engineering

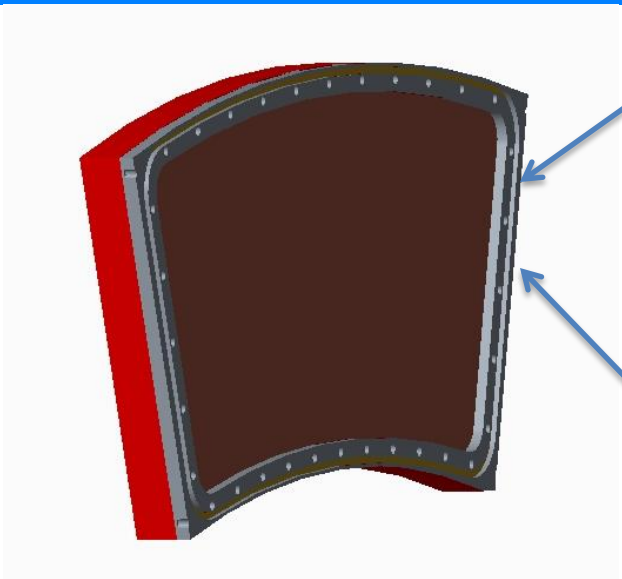

Annular Module Sectors

Module Assembly

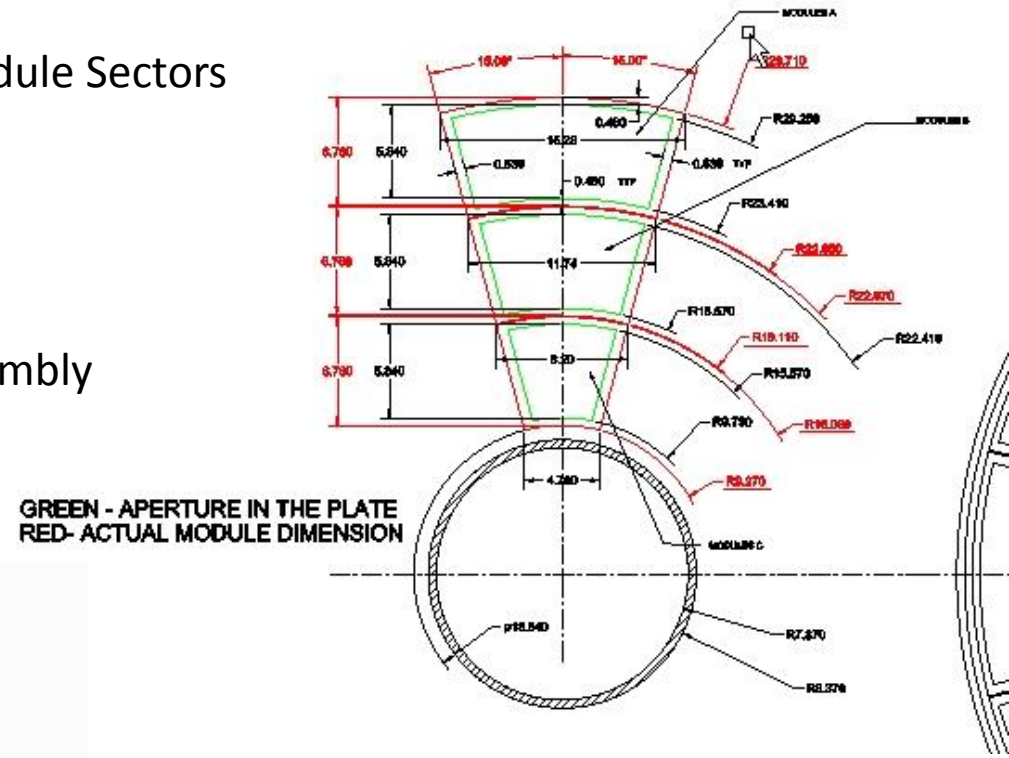

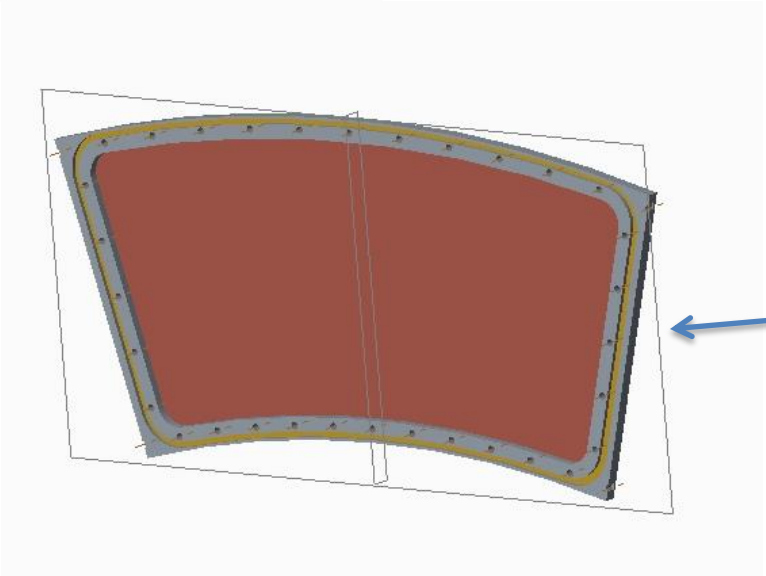

Module Backing Plate

TPC Mechanical Engineering

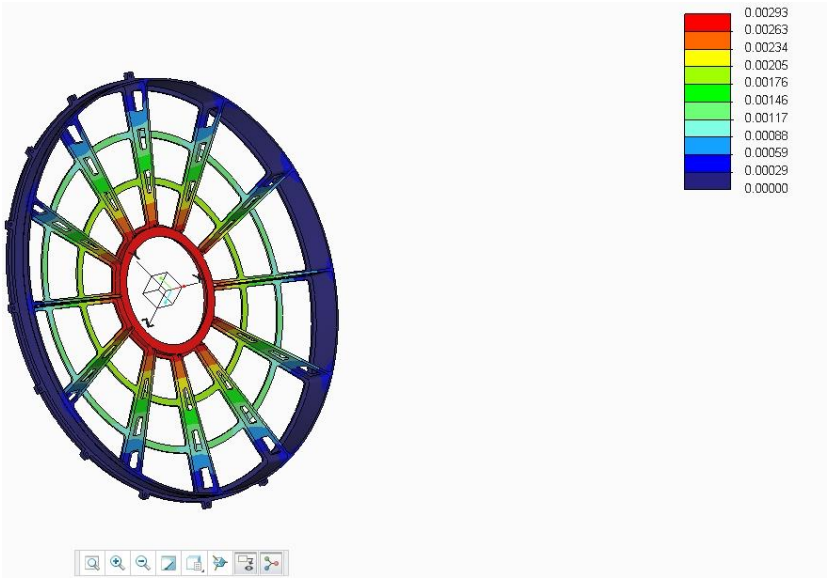

<u>Material</u>

7075-T6 Aluminum

Maximum Deflection (No Modules) – 0.00293 in.
Maximum Deflection (w/Modules) – 0.00174 in.

Used 2 Torr Pressure for FEA (1 Torr=0.0189 psi)

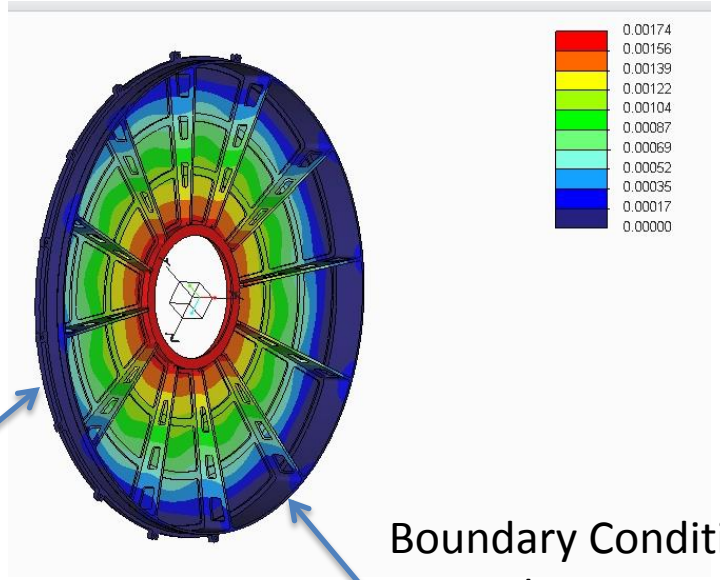

Actual Deflection w/Mounted Modules

Boundary Conditions
Fixed – Outer Dia.
Free – Inner Dia.

TPC Mechanical Engineering

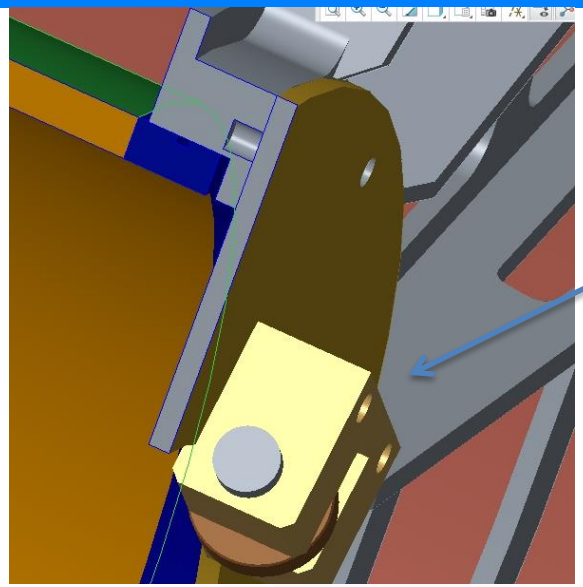

End Flange/Field Cage Connection Details

Adjustable End

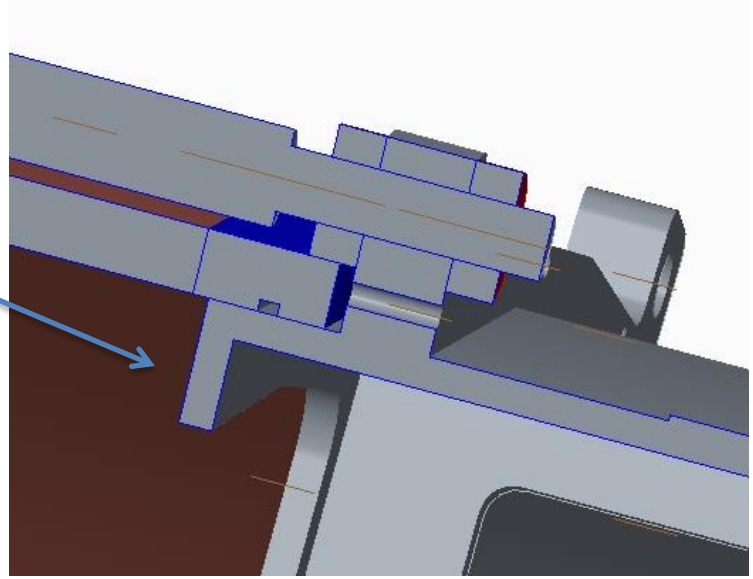

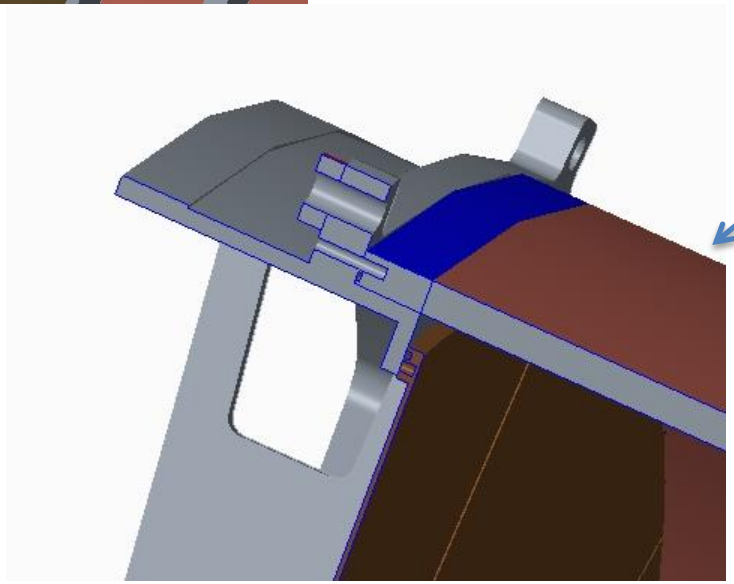

Fixed End

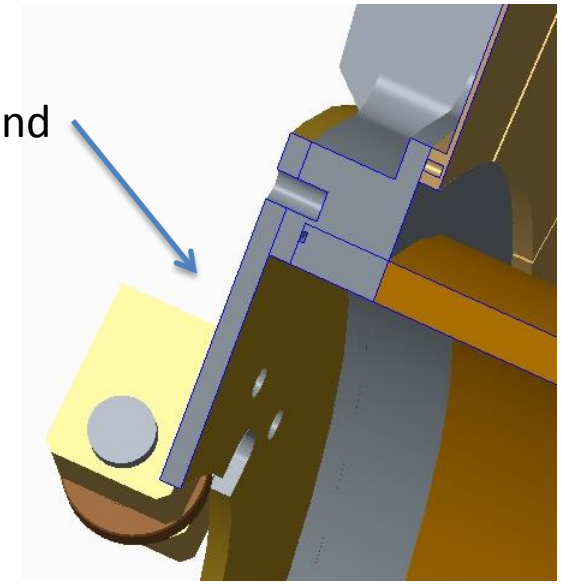

TPC Mechanical Engineering

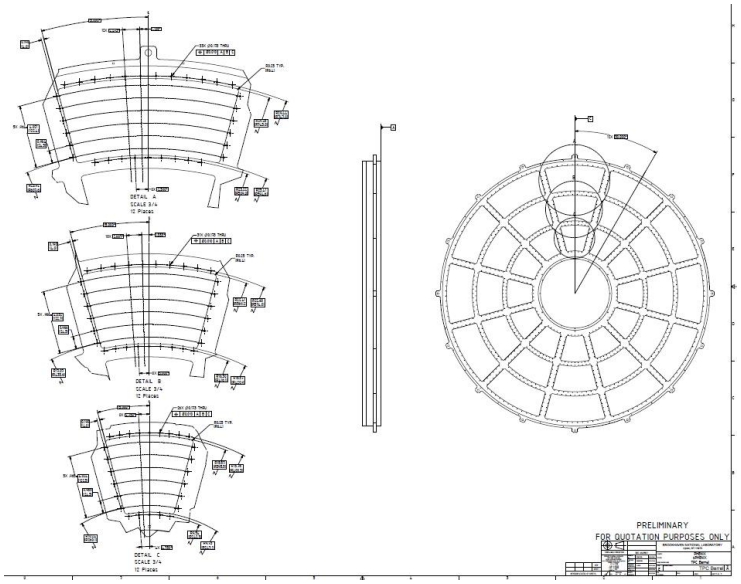

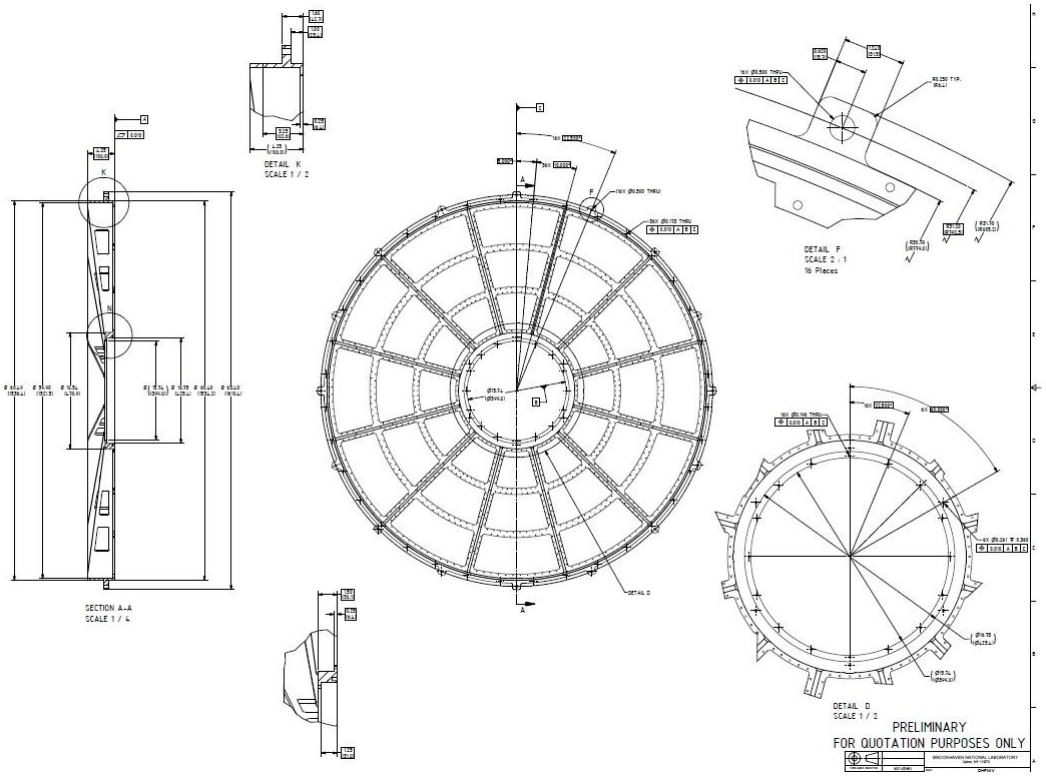

Drawings for Budgetary Quote of End Flange

TPC Mechanical Engineering

TPC Central Membrane – Installation and Alignment

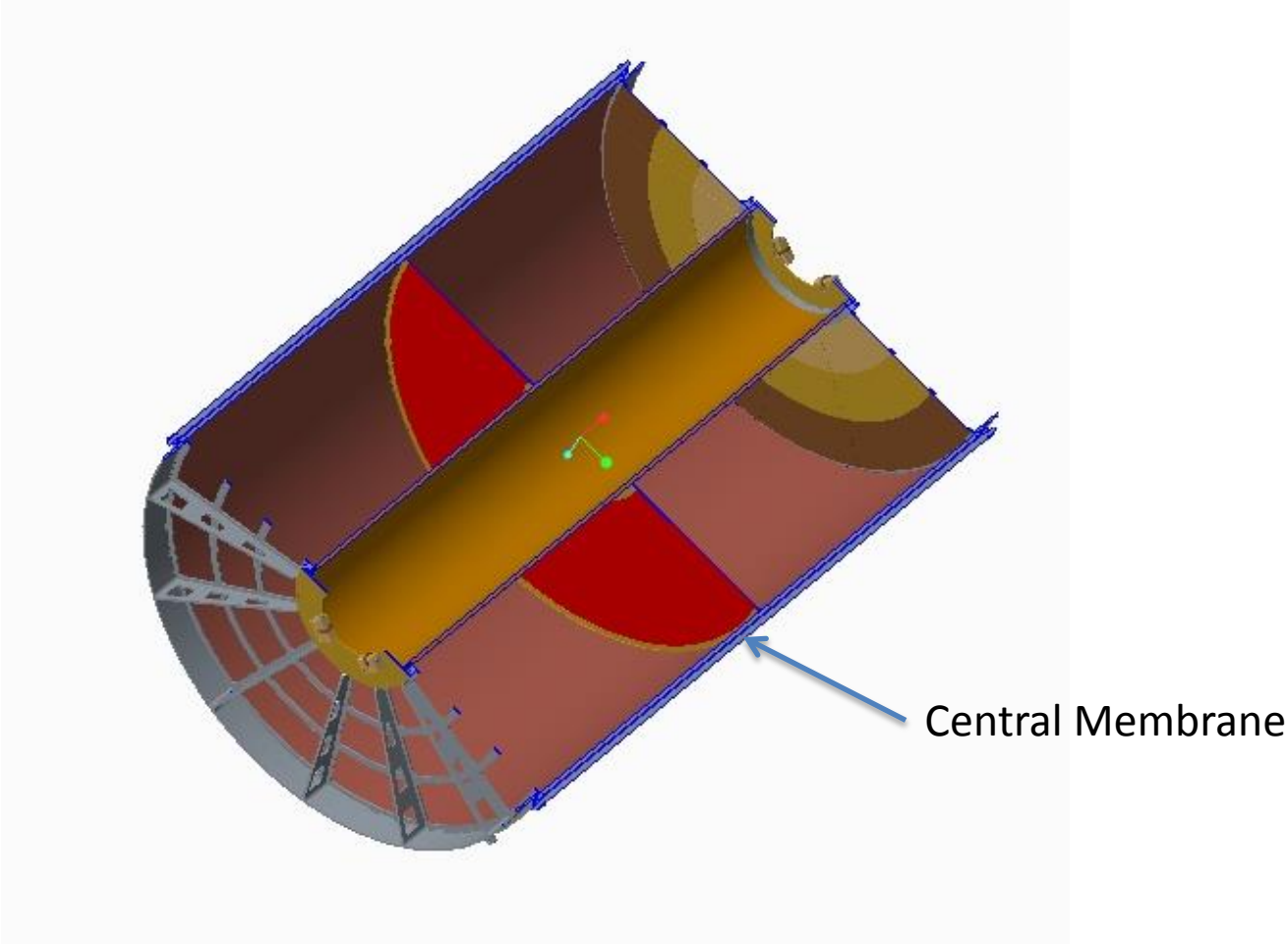

TPC Mechanical Engineering

Central Membrane – Inner Mounting Flange

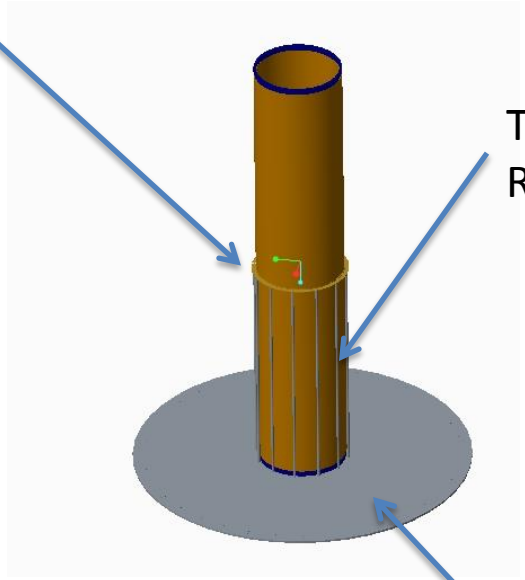

Temporary Spacer Rods

Temporary Plate

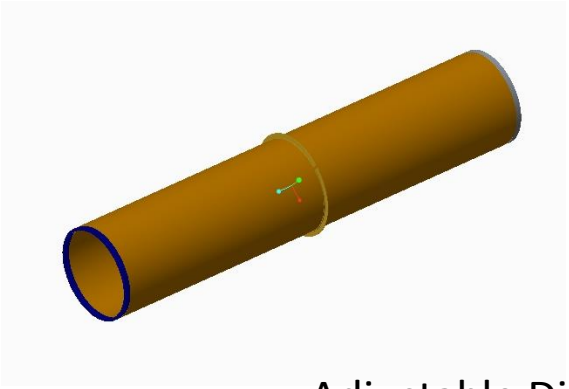

Adjustable Diameter

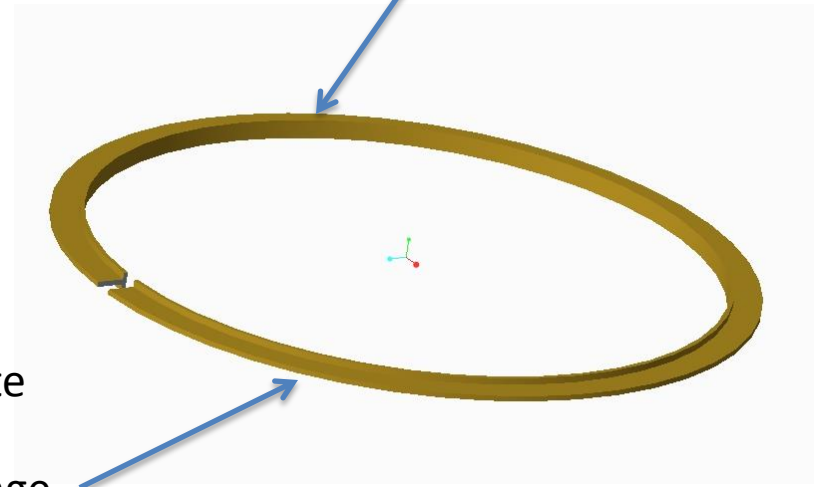

Central Membrane – Outer Mounting Flange

TPC Mechanical Engineering

Central Membrane Installation Tool

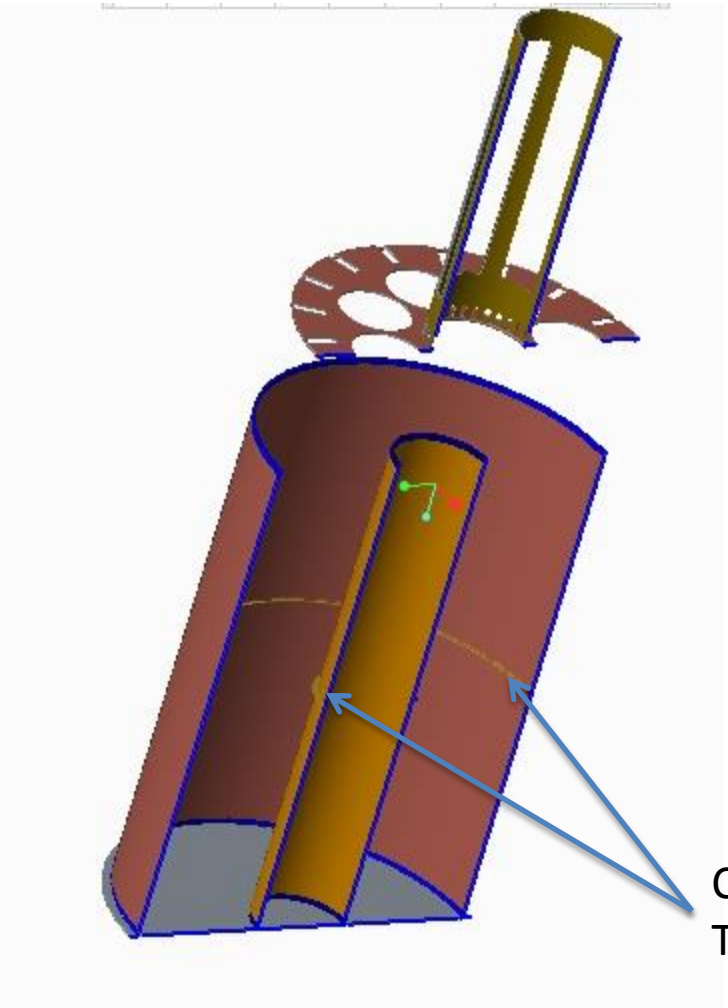

Central Membrane Attached to
Tabs on Inner and Outer Field Cages

TPC Mechanical Engineering

TPC Transporter

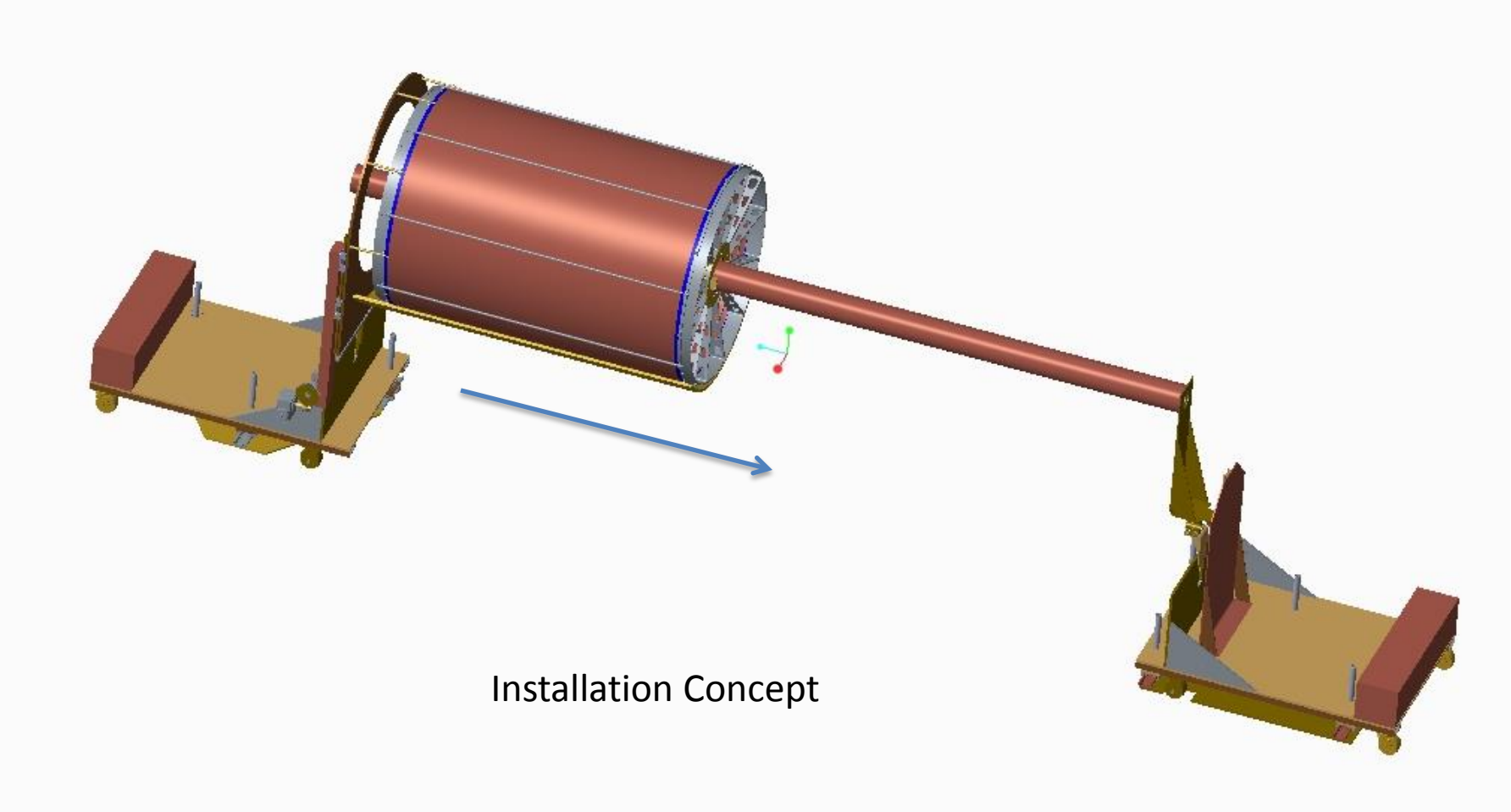

TPC Mechanical Engineering

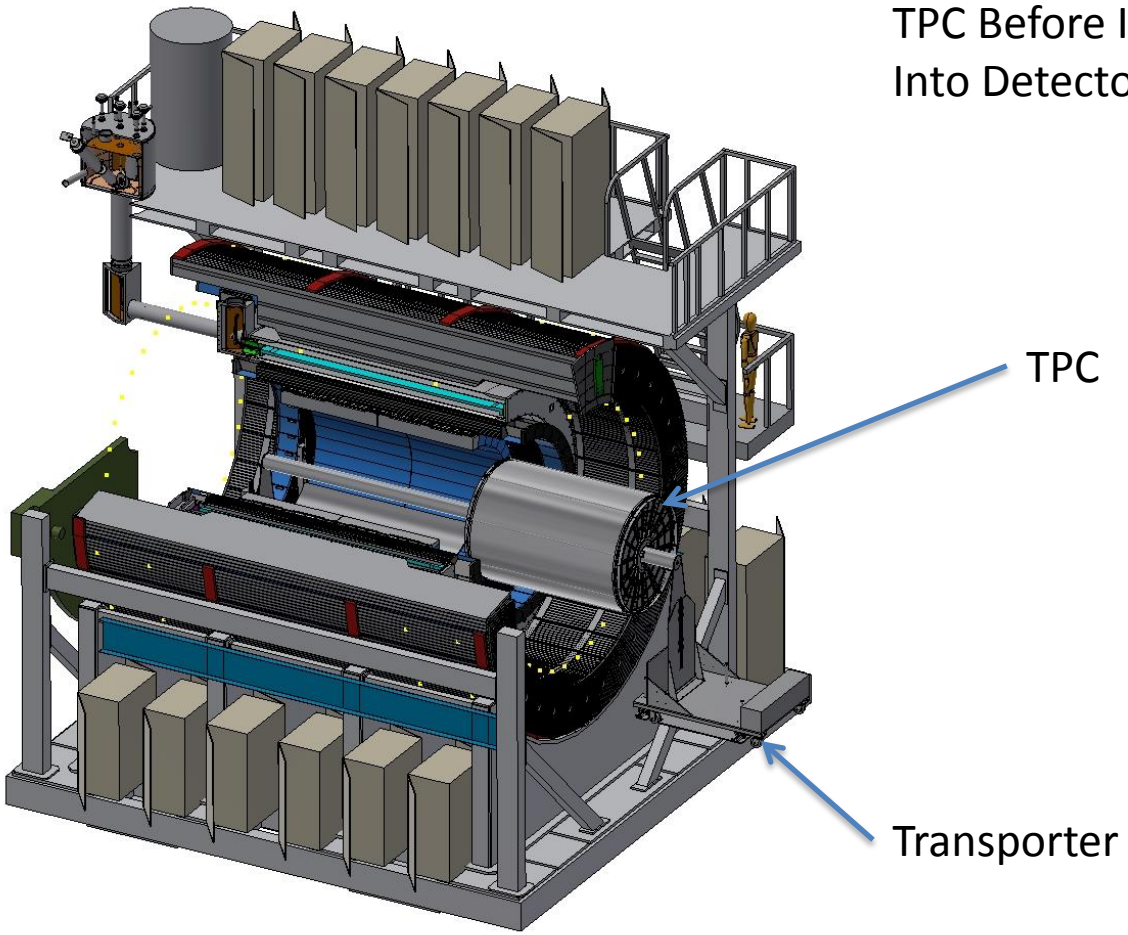

TPC Mechanical Engineering

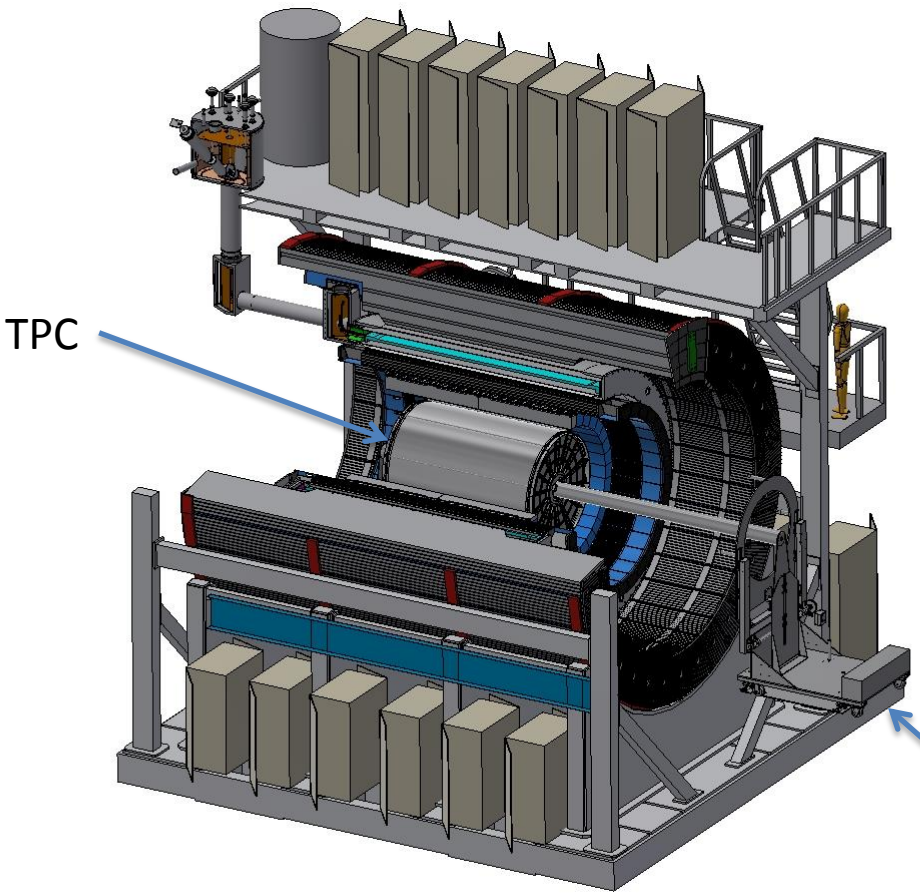
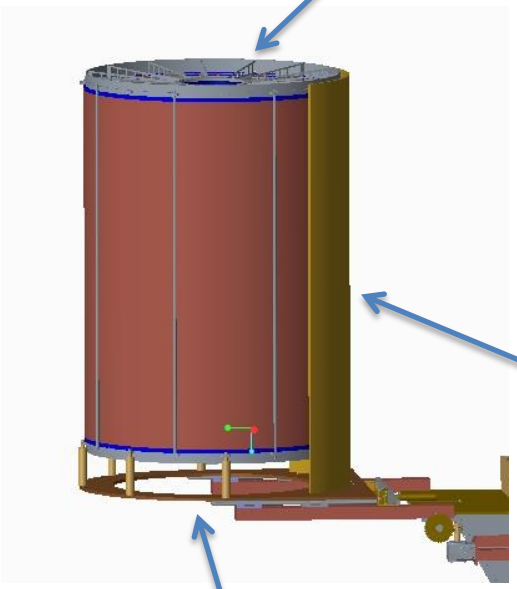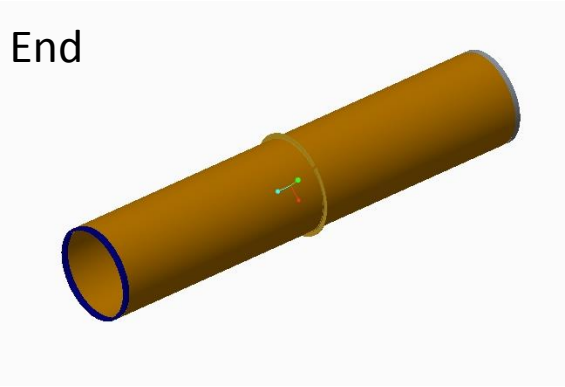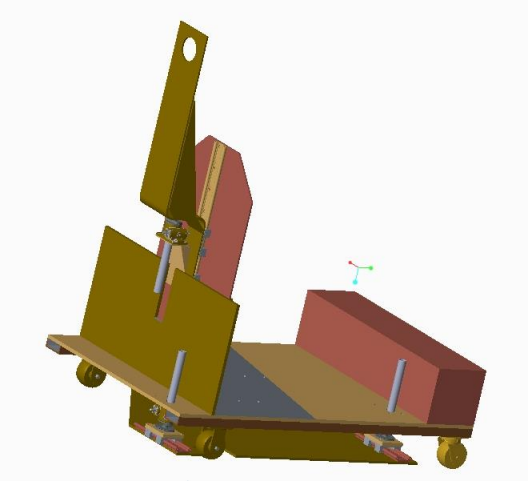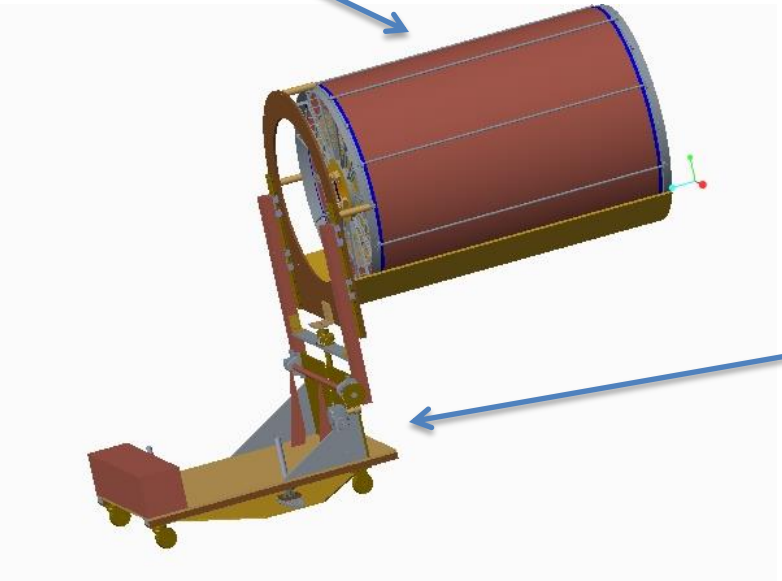
TPC Mechanical Engineering