# ORKA at Fermilab

# Seeking New Physics with Golden Kaon Decays

Douglas Bryman
University of British Columbia

ORKA: https://orka.bnl.gov/

December 16, 2013 P5 at BNL

## Probing for new physics requires a wide field of view!

# Precision Flavor Physics

A small set of crucial rare particle decays extremely sensitive to new physics at high mass scales and new theories of flavor

**Important Flavor-Changing Rare Processes**

$\mu \to e\gamma, \mu$-e Conversion

$K \to \pi\nu\bar{\nu}$

$b \to s\gamma,\ \mathrm{B} \to \mu\mu,\ \tau \to \mu\gamma \ldots$

*Discoveries of new physics at the LHC and elsewhere would require a range of precision flavor physics experiments to home in on the new interpretation.*

The $K \to \pi\nu\bar{\nu}$ decays are among the few most precisely predicted FCNC decays .

# $K^+ \to \pi^+\nu\bar{\nu}$ in the Standard Model

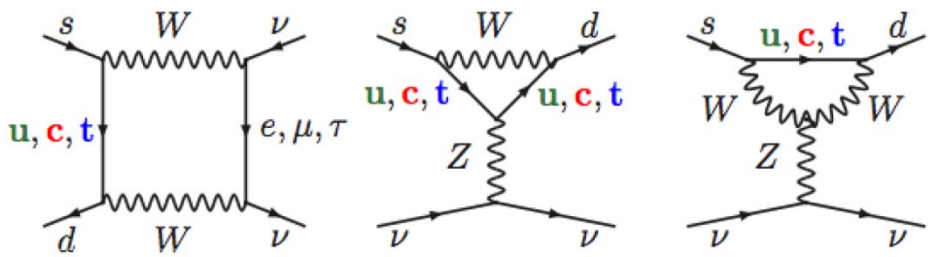


A single effective operator $(\bar{s}_L\gamma_\mu d_L)(\bar{\nu}_L\gamma_\mu\nu_L)$

Dominated by top quark exchange

Sensitive to both CP-violating and CP-conserving effects

Hadronic matrix from well-measured $K^+ \to \pi^0 e^+\nu$

$$B_{SM}(K^+ \to \pi^+\nu\bar{\nu}) = (7.8 \pm 0.8) \text{ x } 10^{-11} *$$

*Uncertainty expected to improve to <7%.

# $K \to \pi\nu\bar{\nu}$ : High Sensitivity to New Physics

Sensitivity to new physics at high mass scales complementary to studies of B decays and lepton flavor violation.

Extra Dimensions as a Theory of Flavor,Z', Dark Sector, Sterile Neutrinos…

$$B(K_L^0 \to \pi^0\nu\bar{\nu}) \text{ vs. } B(K^+ \to \pi^+\nu\bar{\nu})$$

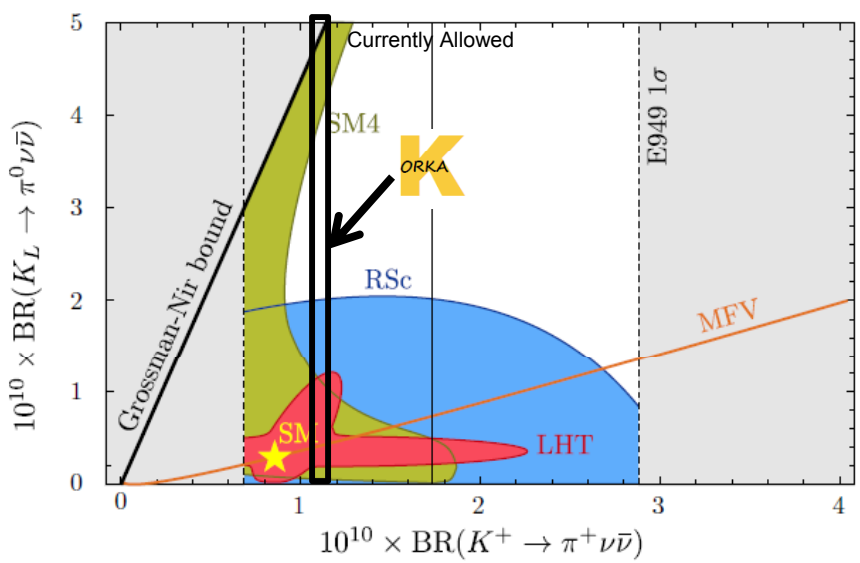


D. M. Straub, arXiv:1012.3893

$Z'\ (m_{Z'} = 5-30\,TeV)$

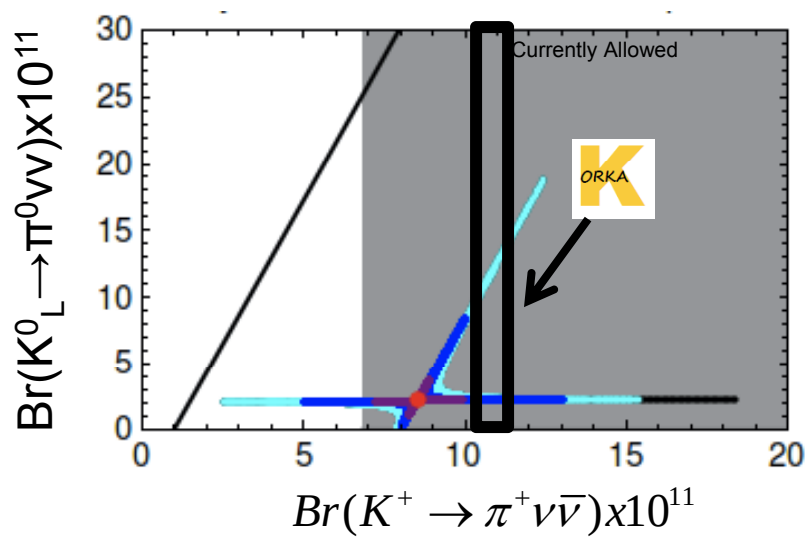


Buras, De Fazio, Girrbach,arXiv:1211.1896

Large effects in K decays; <10% in B decays.

# "FCNC portals to the dark sector"

Dark Sector Decays $K \to \pi^+ X(X)$ may also be observed by ORKA

Operator Dimensional Analysis

$$\frac{m_I^{n-6}}{\Lambda^{n-4}} \approx \frac{g^2}{M_W^2} \frac{g^2}{16\pi^2} \left| V_{tI} V_{tJ} \right|$$

K *decays Highly sensitive for low* dimension operators

| | $n=5$ | $n=6$ | $n=7$ | $n=8$ | $n=9$ |
|---|---|---|---|---|---|
| $s \to d$ | $3.310^7 TeV$ | $130 TeV$ | $2 TeV$ | $0.25 TeV$ | $0.07 TeV$ |
| $b \to d$ | $1.310^5 TeV$ | $26 TeV$ | $1.5 TeV$ | $0.37 TeV$ | $0.16 TeV$ |
| $b \to s$ | $2.710^4 TeV$ | $12 TeV$ | $0.9 TeV$ | $0.25 TeV$ | $0.11 TeV$ |

Kamenik and Smith (2012) link.springer.com/content/pdf/10.1007/JHEP03(2012)090

# BNL E787 / E949 Observed 7 events*:

$$B(K^+ \rightarrow \pi^+ \nu\bar{\nu}) = 1.73^{+1.15}_{-1.05}\, x10^{-10}$$

**Background processes successfully predicted and well understood: The foundation for the ORKA technique.**

Pion Range vs. Energy

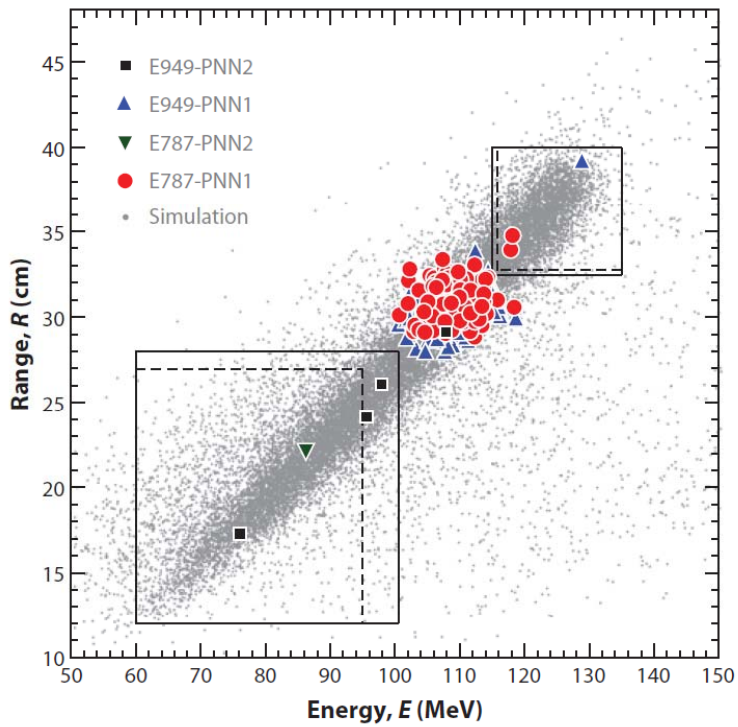




*A.V. Artamonov *et al.*, PHYS. REV. D 79, 092004 (2009).

# Emerging $K \to \pi \nu \bar{\nu}$ Measurements

**CERN** $K^+ \to \pi^+ \nu \bar{\nu}$

- Builds on NA-31/NA-48
- Un-separated GHz beam
- Aim: 80 events at SM
- 2015-18 (LHC Run II)

**J-PARC** $K_L^0 \to \pi^0 \nu \bar{\nu}$

- Upgraded from KEK experiment E391a
- Aim: few events (S/B~1) at SM (Phase I)
- Commissioning 2013

**Fermilab** $K^+ \to \pi^+ \nu \bar{\nu}$

- Builds on E787/E949
- Aim: 1000 events at SM
- *Project start possible in 2015*
  *Data 2020-25*

ORKA: https://orka.bnl.gov/

# ORKA at Fermilab

- 17 institutes in six countries: Canada, China, Italy, Mexico, Russia, USA
  *Financial commitments from foreign sources critically dependent on US approval process (CD0…).*
  - Six US universities
  - Two US National Laboratories
- Leadership from previous BNL and FNAL US rare kaon decay experiments

**Approved by Fermilab Director in 2011**

**CDF hall preservation for ORKA underway**

**R&D Funding 2013-2015: DOE HEP, Fermilab, INFN**

# ORKA at the Fermilab Main Injector

## 4th Generation $K^+ \to \pi^+ \nu\bar{\nu}$ Experiment

**1000 event sensitivity at SM Level**

**Reduced backgrounds: <5% precision**

Overall, >**100 x** sensitivity of E949

**35% deviation from the SM would be a 5σ signal of NP**

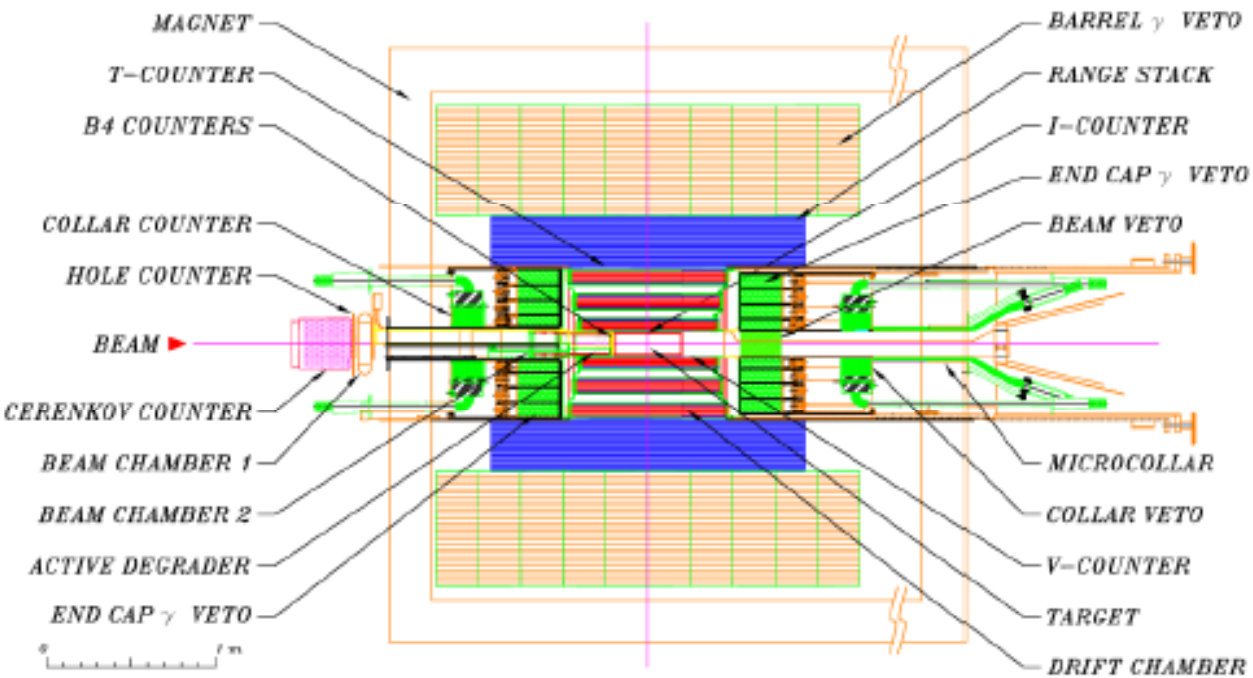


**Incremental Improvements to E949 Approach**

- 600 MeV/c K+ beam
- K stopping rate **x5** with comparable instantaneous rate
- Acceptance **x10**
- Finer segmentation, improved resolutions
- Improved Technologies

# ORKA Uses Existing Fermilab Infrastructure

**Main Injector**

75 KW required (of 700 KW)

95 GeV/c

44% duty factor

(10 s cycle, 4.4 s spill)

**CDF(B0) collision hall:**

Existing tunnels and hall
Superconducting solenoid

A0->B0: reuses beam line magnets

**No Civil Construction Necessary**

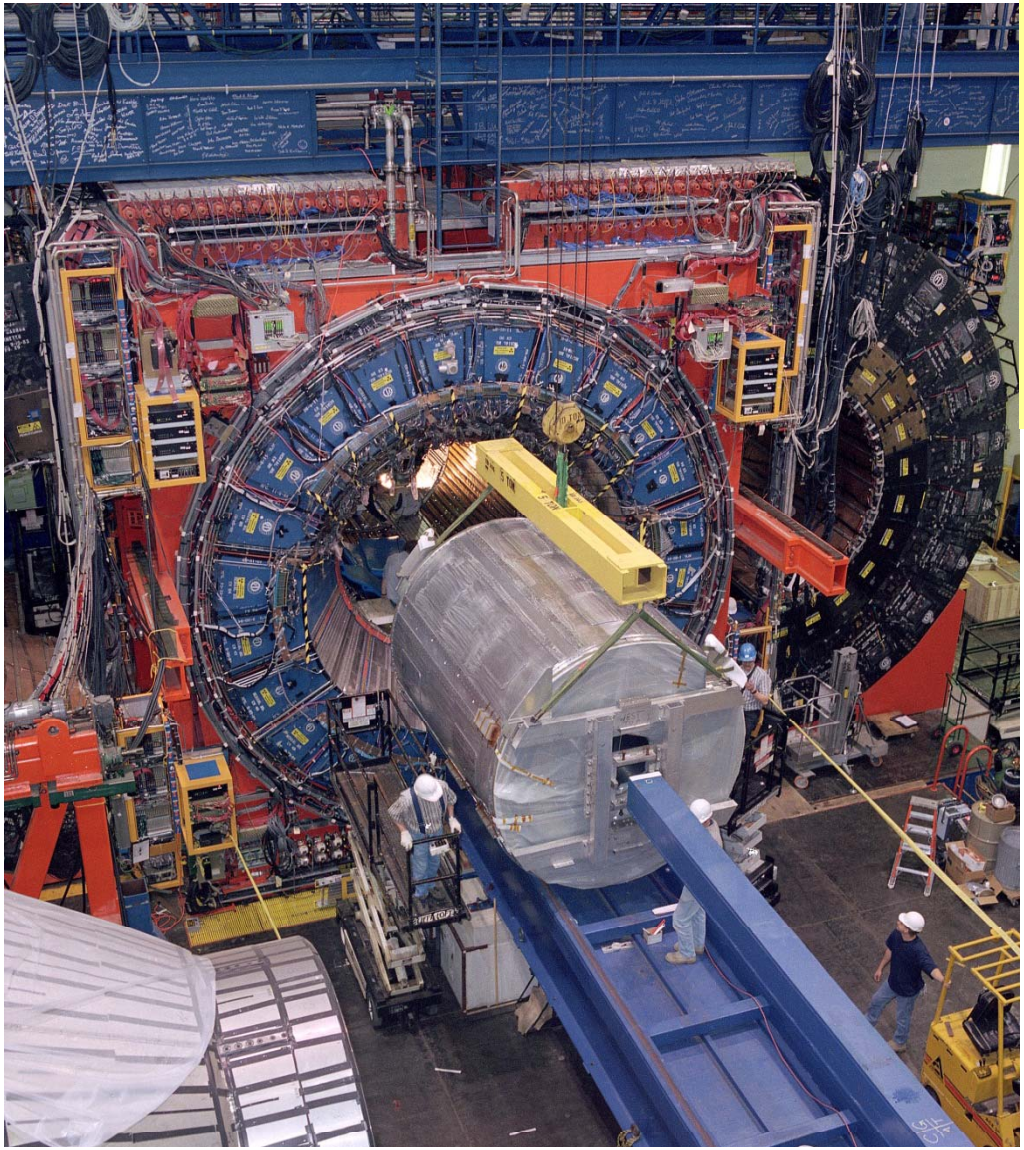

ORKA detector payload replaces the CDF tracker volume.

E949 Central tracker (similar diameter for ORKA)

# ORKA Detector

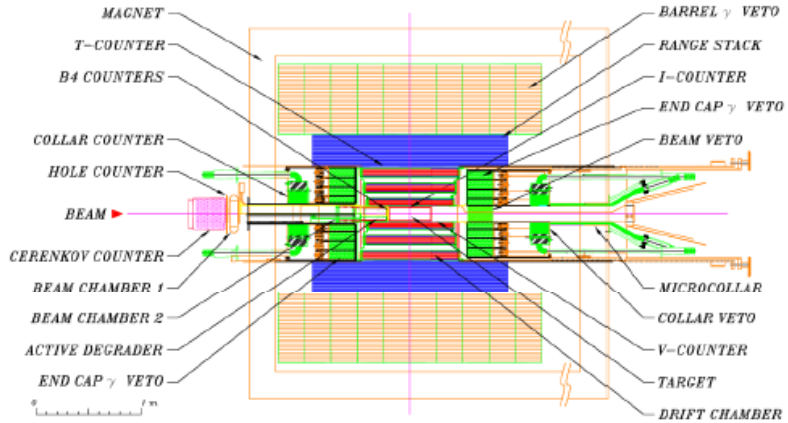


- **Opportunities for *University Groups* to build a state-of-the-art detector**
- **Minimal Fermilab resources needed**

*R & D*

Solutions exist for all systems

*R & D* aimed at cost savings and refinements

- Solid state photo-sensors -- SiPMs
- Efficient photon detectors
  - Shashlyik, Adriano (INFN)
- Range stack tracking -- GEM
- Low mass drift chamber design

Simulations studies

- ILCroot framework established
- Range stack segmentation and readout
- Photon veto geometry and function
- Target segmentation and readout
- Drift chamber parameters
- Kaon beam line: G4Beamline

Preliminary engineering concepts

- Detector support in CDF magnet
- Installation
- Power, cooling and cabling

Cost analysis (CD0/CD1 Estimated level)

Experiment: $50M* (FY13, Total Project Cost)

Beams, Accelerator Improvements: $23M*

*Includes 50% contingency

# ORKA Physics Opportunities with $4 \times 10^{14}$ Stopped Kaons

Multiple triggers, analyses, thesis topics

| Process | Current | ORKA |
|---|---|---|
| $K^+ \to \pi^+ \nu\bar{\nu}$ | 7 events | 1000 events |
| $K^+ \to \pi^+ X^0$ | $< 0.73 \times 10^{-10}$ @ 90% CL | $< 2 \times 10^{-12}$ |
| $K^+ \to \pi^+ \pi^0 \nu\bar{\nu}$ | $< 4.3 \times 10^{-5}$ | $< 4 \times 10^{-8}$ |
| $K^+ \to \pi^+ \pi^0 X^0$ | $<\sim 4 \times 10^{-5}$ | $< 4 \times 10^{-8}$ |
| $K^+ \to \pi^+ \gamma$ | $< 2.3 \times 10^{-9}$ | $< 6.4 \times 10^{-12}$ |
| $K^+ \to \mu^+ \nu_{heavy}$ | $< 2 \times 10^{-8} - 1 \times 10^{-7}$ | $< 1 \times 10^{-10}$ |
| $K^+ \to \mu^+ \nu_\mu \nu\bar{\nu}$ | $< 6 \times 10^{-6}$ | $< 6 \times 10^{-7}$ |
| $K^+ \to \pi^+ \gamma\gamma$ | 293 events | 200,000 events |
| $\Gamma(Ke2)/\Gamma(K\mu2)$ | $\pm 0.5\%$ | $\pm 0.1\%$ |
| $\pi^0 \to \nu\bar{\nu}$ | $< 2.7 \times 10^{-7}$ | $< 5 \times 10^{-8}$ to $< 4 \times 10^{-9}$ |
| $\pi^0 \to \gamma X^0$ | $< 5 \times 10^{-4}$ | $< 2 \times 10^{-5}$ |

**E787/E949: 42 publications, 26 Theses**

**KTEV: 50 publications, 32 Theses**

# Scenarios for Discovery of New Physics

**New Physics found at LHC or NA62, KOTO, LFV, B decays …**

$\Rightarrow$ New effects with unknown flavor- and CP-violating couplings

***ORKA*** *along with other flavor-physics experiments needed to do high precision studies of flavor- and CP-violating effects to interpret New Physics models.*

**New Physics NOT found at LHC or NA62, KOTO, LFV, B decays…**

***ORKA*** *will provide an order of magnitude additional reach; sensitive to New Physics at mass scales beyond the LHC (through virtual effects).*

$K^+ \to \pi^+ \nu\bar{\nu}$ and $K_L^0 \to \pi^0 \nu\bar{\nu}$ have special status because of their small SM uncertainties, small branching fractions, and large sensitivity to new effects.

# ORKA at Fermilab

* Ultimate strange sector experiment sensitive to wide array of new physics
  - Unique sensitivity to NP not covered by LHC, B physics, or LFV experiments
* Near term discovery potential at Fermilab in the coming decade
  - New physics accessible in $K^+ \to \pi^+ \nu \bar{\nu}$ at $5\sigma$ for a 35% deviation from SM
  - International leadership on rare processes (10x NA62, 100 x KOTO)
* Broaden Fermilab's weak interaction lepton focus to include the quark sector
* Guaranteed physics output with known technique and experienced team
* Cost-effective, highest quality science: $50M (Experiment); $23M (AIP)
  - Experiment funding sought from DOE, NSF, and non-US sources
  - Effective use of Fermilab's infrastructure investments
* University-scale state-of-the-art detector and many thesis subjects

Window of opportunity for discovery:

| | |
|---|---|
| 2014 | P5 Endorsement |
| 2017-20 | Construction Start |
| 2020-25 | Operation |

# ORKA and US Program Planning

- ORKA is a golden opportunity for physics discovery and for international leadership at Fermilab.
- Clear time frame for ORKA Data taking : 2020-2025 between NOvA and LBNE.

We request that P5 recognize this opportunity and recommend ORKA's inclusion in the base plan for US particle physics.

# Additional Information

# ORKA Cost Estimate and Schedule

Supervised by experienced project managers Ralph Brown, Steve Kettel (BNL)

Estimated to be at the CD0/1 Level.

Each sub-system leader reviewed the design, refined the requirements, and developed a cost estimate providing the basis of the estimate and a contingency analysis for M&S and Labor. Estimates assumed a FY2014 start with completion in 4 years.

ORKA Project Base Cost: $32.8M (FY13 dollars) plus 51% contingency:

**Total Project Cost (TPC) $50M**

Detector Sub-system deliverables, integration, installation: 79%

Project Management: 18%

Other costs: 3%

**Accelerator Improvement Projects (AIP): $23M**

# ORKA Cost Estimate

| WBS | Description | Base Cost | cont. (%) | Total Cost (FY13 $k) | Funding Source |
|---|---|---|---|---|---|
| **1.0** | **TPC** | **$32,800** | **51%** | **$50,000** | |
| **1.1** | **Accelerator & Beams** | **0** | **0%** | **0** | |
| 1.1.1 | A0 to B0 transport | 0 | 0% | 0 | AIP |
| 1.1.2 | Target & Dump | 0 | 0% | 0 | AIP |
| 1.1.3 | Kaon Beam | | | | |
| **1.2** | **Detector** | **25,370** | **53%** | **38,910** | |
| 1.2.1 | Spectrometer Magnet | 1,010 | 50% | 1,510 | ORKA |
| 1.2.2 | Beam and Target | 850 | 45% | 1,240 | ORKA |
| 1.2.3 | Drift Chamber | 3,320 | 40% | 4,650 | ORKA |
| 1.2.4 | Range Stack | 4,490 | 53% | 6,860 | ORKA |
| 1.2.5 | Photon Veto | 5,830 | 60% | 9,330 | ORKA |
| 1.2.6 | Electronics | 6,930 | 59% | 11,020 | ORKA |
| 1.2.7 | Trigger & DAQ | | | | ORKA |
| 1.2.8 | Software & Computing | 0 | 0% | 0 | OPS/Research |
| 1.2.9 | Installation | 2,940 | 46% | 4,300 | ORKA |
| **1.3** | **Project Management** | **6,510** | **40%** | **9,110** | **ORKA** |
| **1.4** | **OPC** | **950** | **60%** | **1,520** | **ORKA** |
| 1.4.1 | R&D | 950 | 60% | 1,520 | ORKA |
| 1.4.2 | Commissioning | 0 | 0% | 0 | OPS |
| AIP#1 | Target/Dump Systems | 2280 | 60% | 3,650 | AIP |
| AIP#2 | Separated Kaon Beam | 5400 | 60% | 8,640 | AIP |
| AIP#3 | Magnets for IF | 2,740 | 44% | 3,960 | AIP |
| AIP#4 | High Intensity Beam | 4,690 | 37% | 6,410 | AIP |
| **Total AIP** | | **15,110** | **50%** | **23,000** | |

ORKA

| WBS | Description | TPC | ORKA Schedule | | | | | | | | | | | |
|---|---|---|---|---|---|---|---|---|---|---|---|---|---|---|
| | | | FY13 | FY14 | FY15 | FY16 | FY17 | FY18 | FY19 | FY20 | FY21 | FY22 | FY23 | FY24 |
| 1.0 | TPC | $50,000 | | | CD-0 | CD-1/CD-2 | CD-3 | | | CD-4 | | | | |
| 1.1 | Accelerator & Beams | 0 | | | ORKA Project | | | | | | | | | |
| 1.2 | Detector | 38,910 | ORKA Research R&D | | | Design | Construction | | Install | Operations | | | | |
| | | | CDF D&D | | | | | | | | | | | |
| 1.3 | Project Management | 9,110 | | | | Project Management | | | | | | | | |
| 1.4 | OPC | 1,520 | | | Project R&D | | | | | | | | | |
| Related AIP | | $23,000 | | | | | | | | | | | | |
| AIP#1 | Target/Dump Systems | 3,650 | | | Design Constr. | | Installation | | | | | | | |
| AIP#2 | Separated Kaon Beam | 8,640 | | | Design Constr. | | Inst. | | | | | | | |
| AIP#3 | Magnets for IF | 3,960 | | | Construction | | | | | | | | | |
| AIP#4 | High Intensity Beam | 6,410 | | | Design | Installation | | | | | | | | |

# Scientific Effort

- Current Collaboration: 17 groups with 50 people (mostly faculty/staff)
- Future Collaboration: 150 (based on KTeV and E949 experience)

| | R&D | Project/ Construction | Commissioning | Operations/ Analysis |
|---|---|---|---|---|
| **FTE*** | **17** | **40** | **50** | **65** |
| **Faculty** | 7 | 20 | 15 | 20 |
| **Postdoc** | 5 | 10 | 20 | 20 |
| **Student** | 5 | 10 | 15 | 25 |

*Not including project-supported effort.

# Fermilab Main-Injector Operations and ORKA

- ORKA requires slow-extracted Main-Injector beam in parallel with fast-extracted beam for NOvA. This will occur late in the NOvA program (2020-2025) when the statistical sensitivity is least impacted.

- Fermilab currently interlaces fast-extracted beam (e.g. NOvA) and slow-extracted beam (e.g. SeaQuest) cycles within the Main-Injector time-line. This is a routine operation at proton synchrotrons world-wide.

- It is straightforward for 120 GeV NOvA cycles and 95 GeV ORKA cycles to co-exist in the same time-line.

- ORKA aims at 75kW of slow-extracted beam which requires development. The Tevatron and the AGS have demonstrated 25kW and 20-40kW of high quality slow-extracted beam. The JPARC program requires 100kW of slow-extracted beam and commissioning toward this goal is underway at JPARC.

# Detector Technology Development and ORKA

- ORKA presents an excellent opportunity for US university groups to develop and construct a state- of-the-art detector system. Most components are appropriate in scale for university-based construction. The ORKA detector includes large scale application of Geiger-mode silicon photo-sensors ("Silicon Photomultipliers", SiPMs), high speed scintillator technology, and wave-form digitizer technologies that can broadly advance the field.

- ORKA will be "triggerless" with data fully-streaming from the detector and analyzed with high level filter algorithms to maximally leverage the advanced detector and Main-Injector resources. Establishing fully-streaming data acquisition architectures as the new standard is an important step for the field.

- ORKA upgrades would benefit from on-going photo-sensor R&D (e.g. LAPPDs) and next-generation electromagnetic calorimetry development.

# Critical Effort From Fermilab for ORKA

- **CDF decommissioning**: Prepare hall for ORKA.

- **Proton beam line:** Use existing Main Ring magnets. No advanced technologies are required and a solid cost estimate exists.

- **High power beam extraction and targeting**: Raise slow-extracted beam power from the current program level (Sea-Quest) to the eventual ORKA level (x3). Fermilab can collaborate with J-PARC and BNL.