sPHENIX HADRON CALORIMETERS ASSEMBLY SCENARIO. PRELIMINARY DISCUSSION. OUTER HADRON CALORIMETER

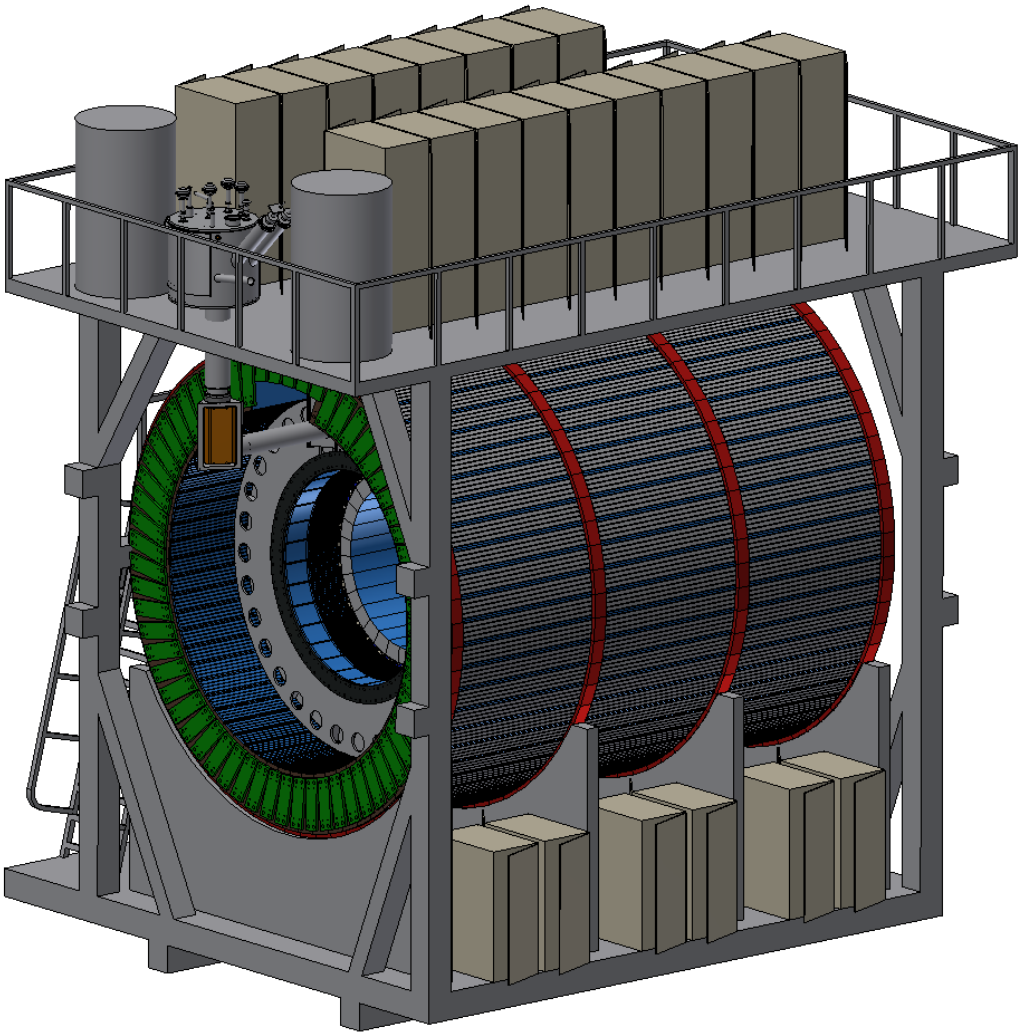

SPHENIX EXPLODED VIEW

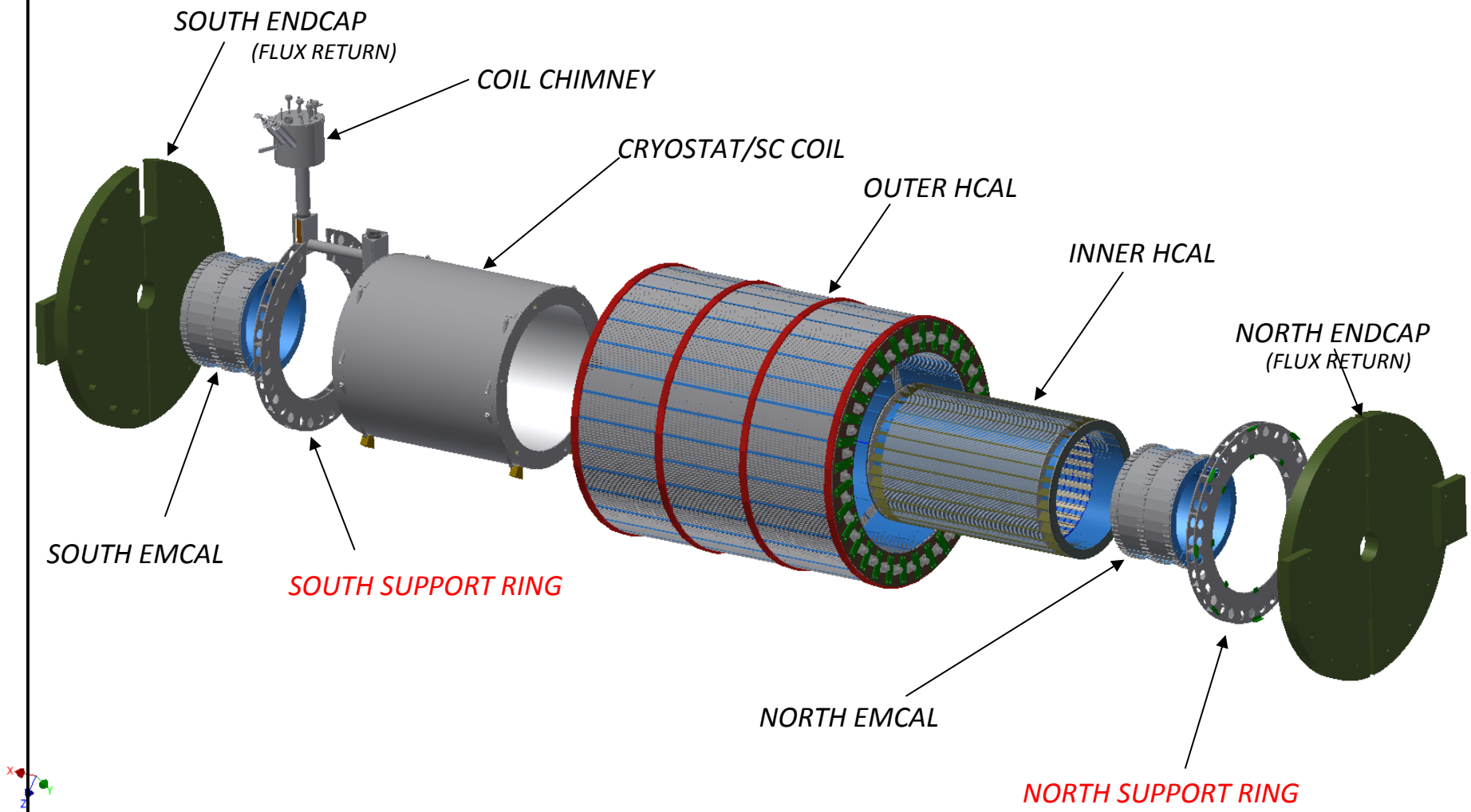

sPHENIX HADRON CALORIMETERS ASSEMBLY SCENARIO.
PRELIMINARY DISCUSSION. OUTER HADRON CALORIMETER

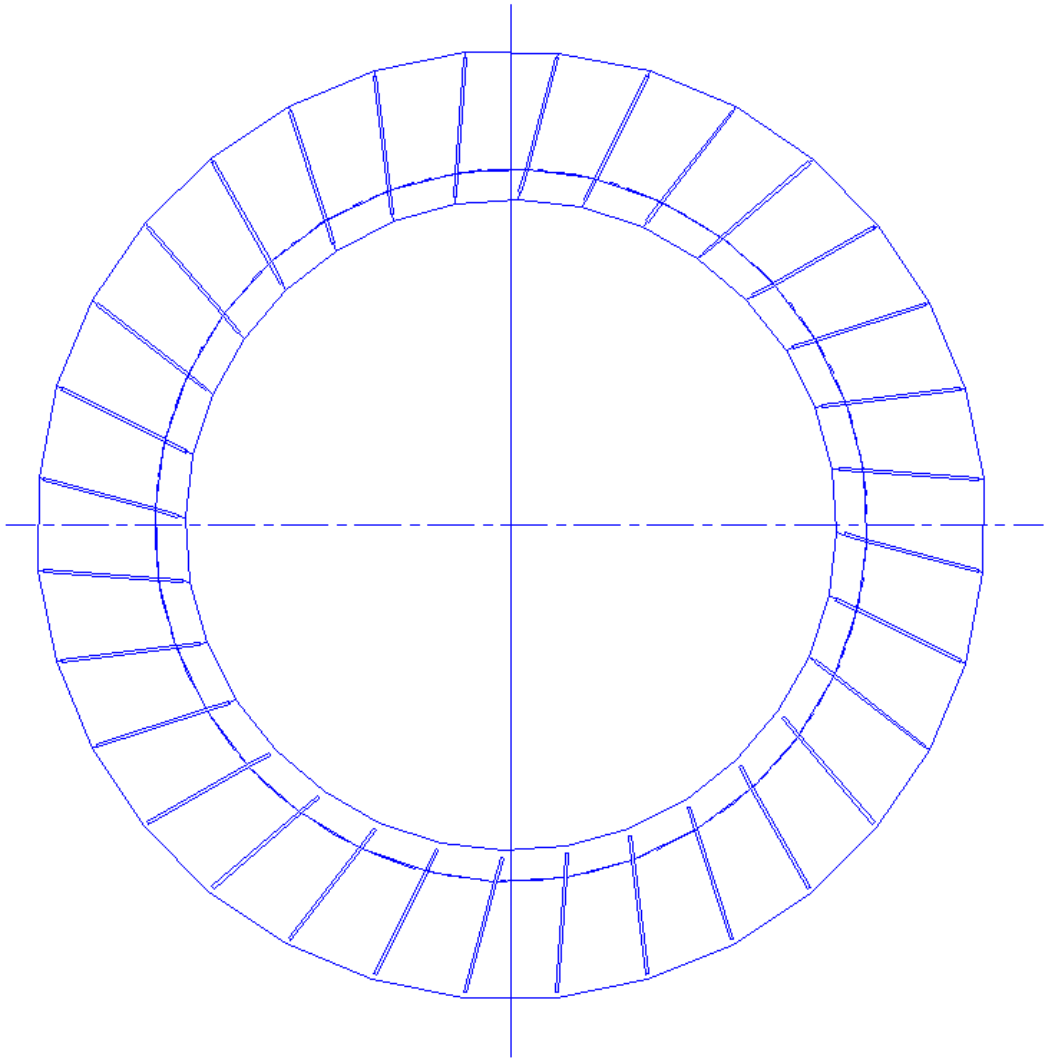

1. **OUTER HADRON CALORIMETER ASSEMBLED FROM 32 SECTORS (EACH OCUPIES 11.25 DEGREE) CONNECTED TOGETHER BY SPLICE FRONT PLATES**

2. **AT THE BOTTOM CALORIMETER SUPPORTED BY CRADLE**

xPHENIX OUTER H-cal

MODULE VERSION. PRELIMINARY STUDY . Module dimensions

11.25 degree SECTOR, 32 TOTAL

SECTOR CONSISTS OF STEEL ABSORBER PLATES, SEPARATED BY 10mm PROVIDED FOR DETECTOR PLATES

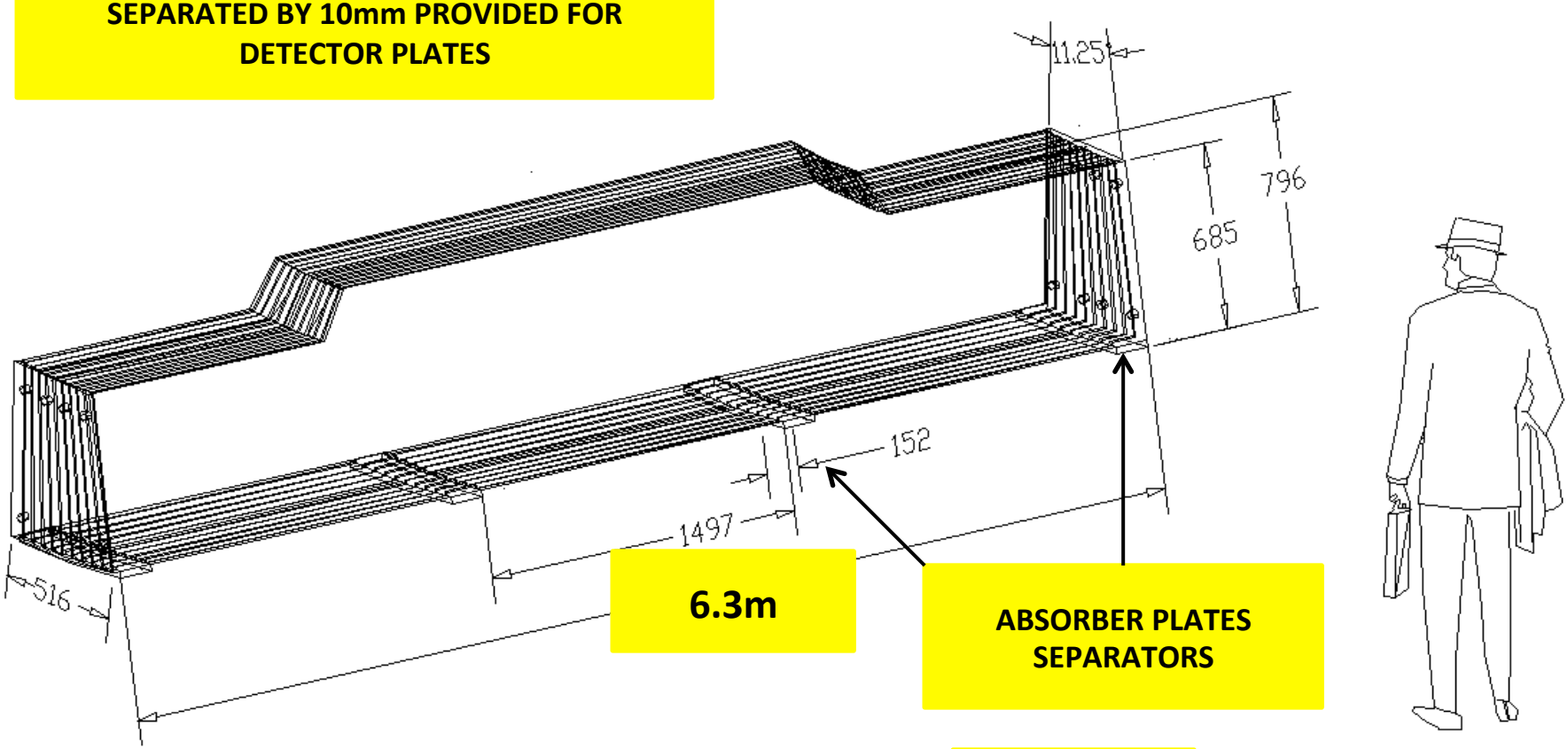

MODULE WEIGHT = **13000** kg

MECHANICAL TOLERANSES REQUIREMENTS

1. SECTOR LENGTH +/- 3mm;
2. GAP FOR DETECTOR PLATES +/- 0.5mm;
3. ALL OTHER MECHANICAL TOLERANCES +/- 1mm;

sPHENIX OUTER H-cal

SECTOR VERSION. PRELIMINARY STUDY . Module exploded view 2

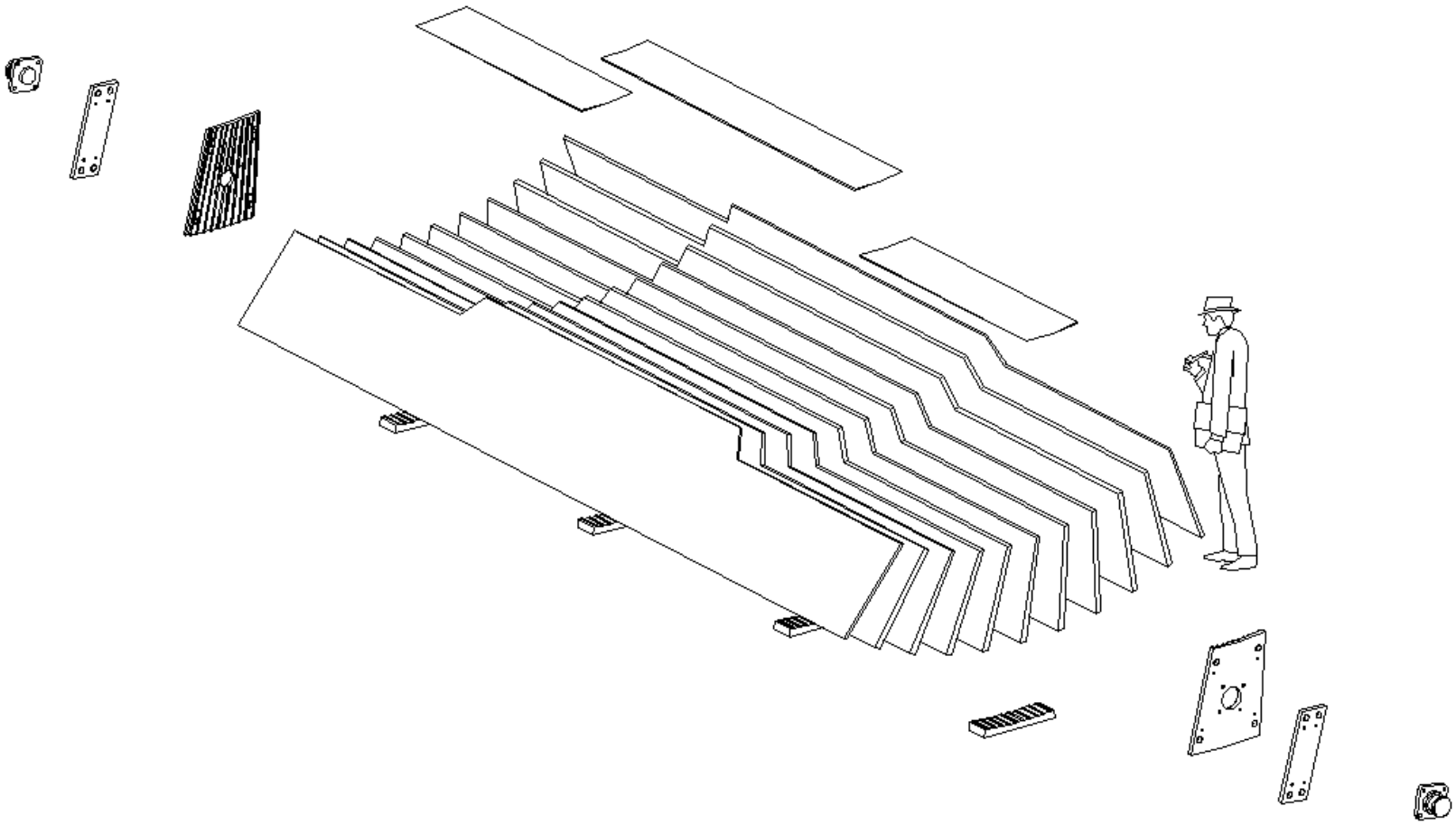

sPHENIX OUTER H-cal. 11.25 degree module

SECTOR LIFTING ANALYSES. MODULE IN HORIZONTAL POSITION. DEFORMATION

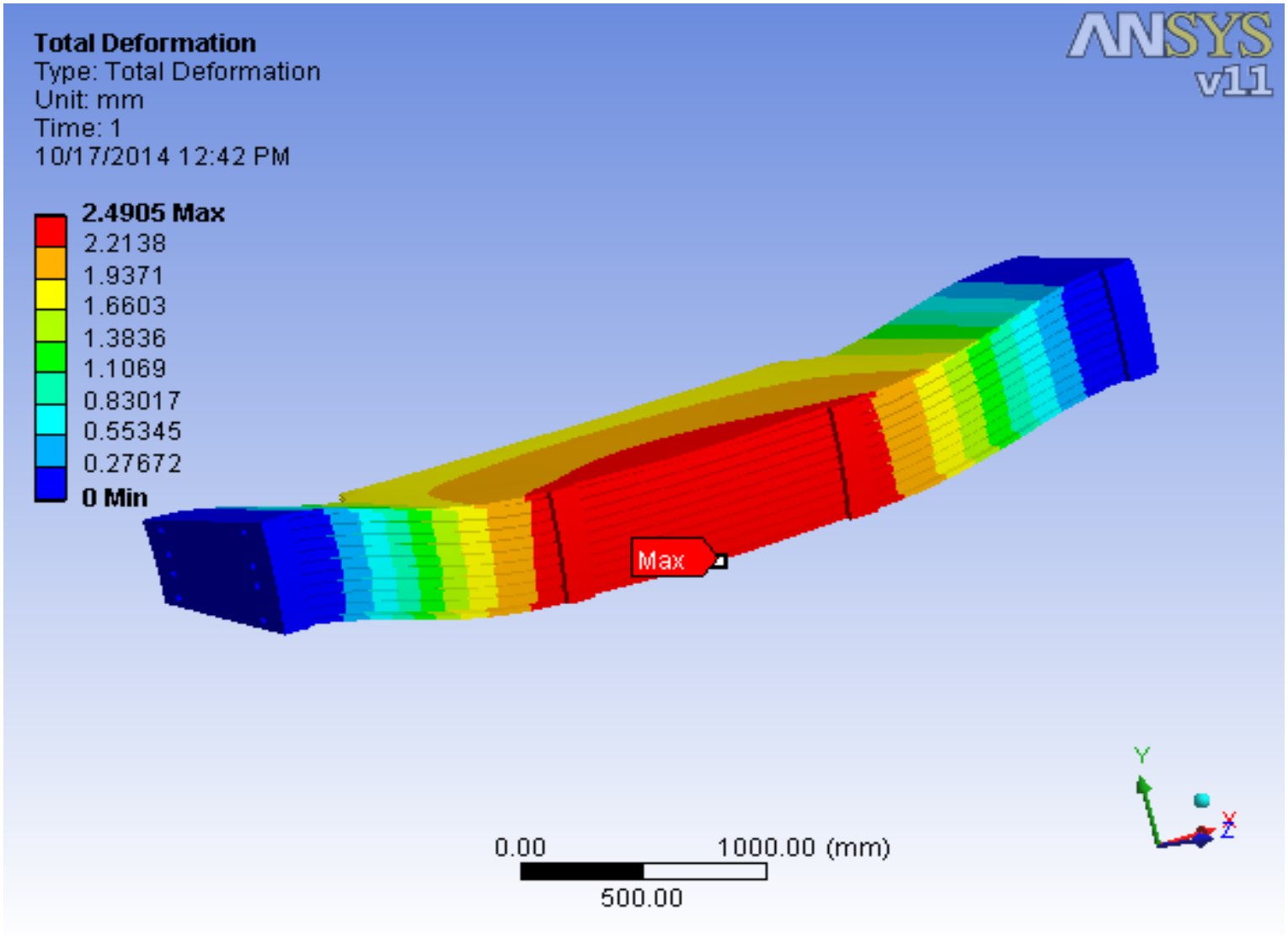

1ST HCAL SECTOR INSTALLATION

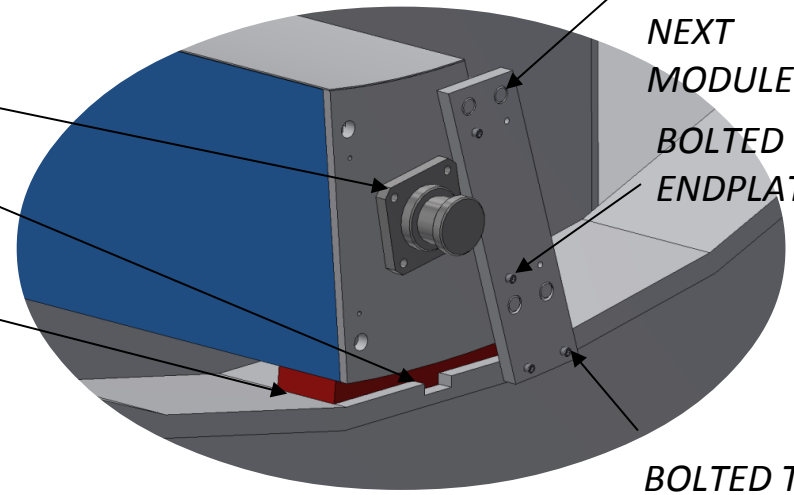

OUTER HCAL SERVES AS THE SUPPORT STRUCTURE FOR THE DETECTOR AND MAGNET FLUX RETURN

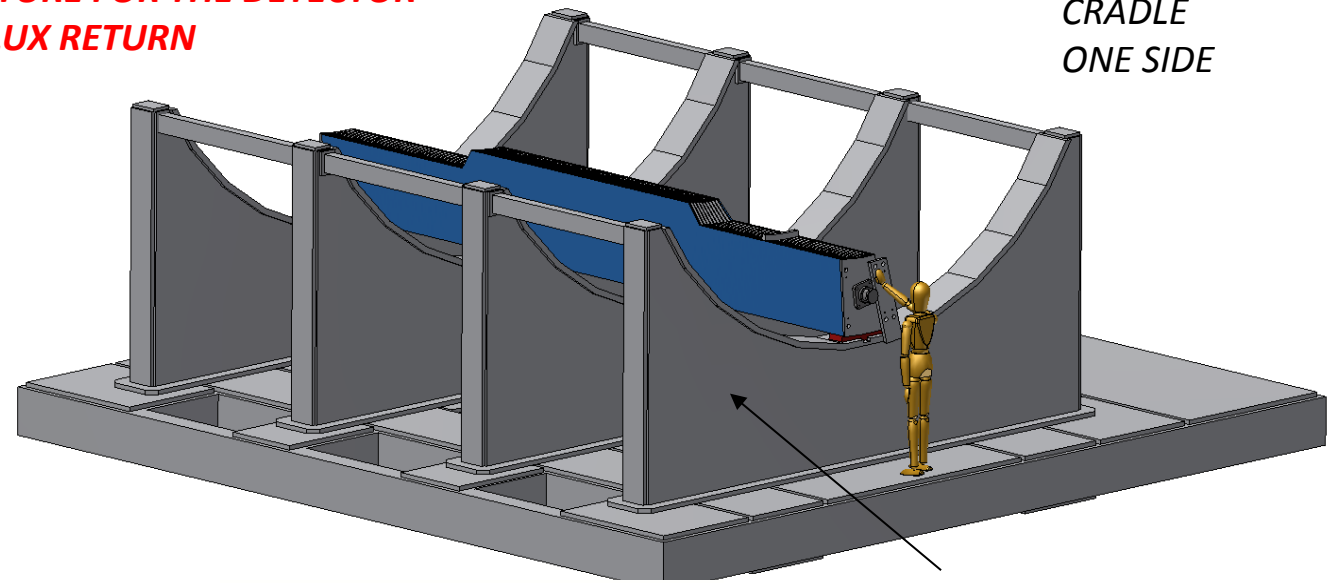

~180 deg OUTER HCAL ASSEMBLED

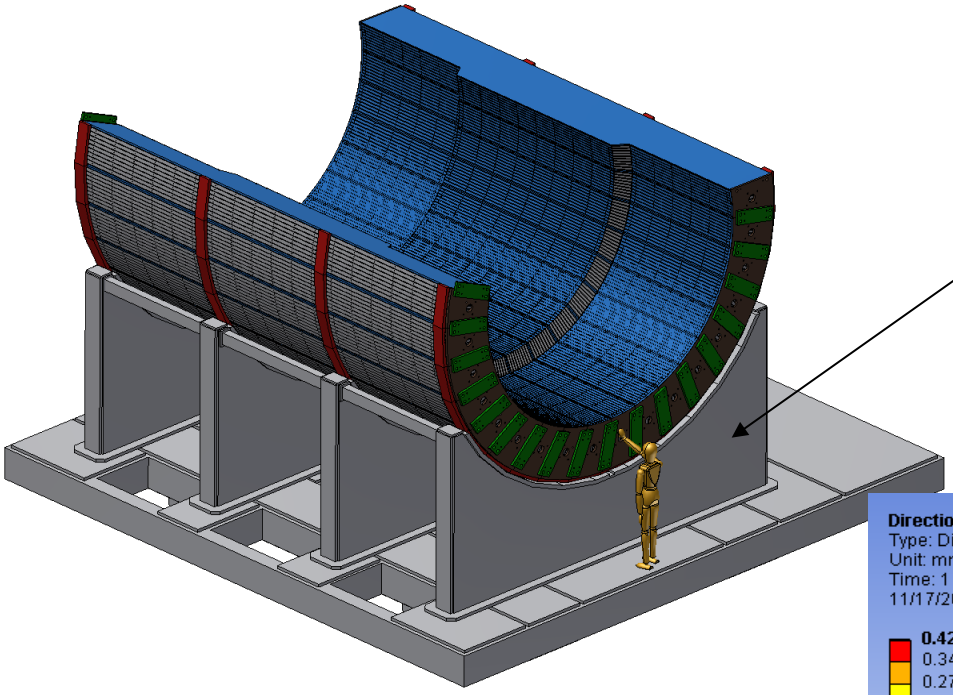

120 DEGREE OR MORE BOTTOM SUPPORT WILL BE SUFFICIENT

TOTAL DEFORMATION IS 0.4mm MAX

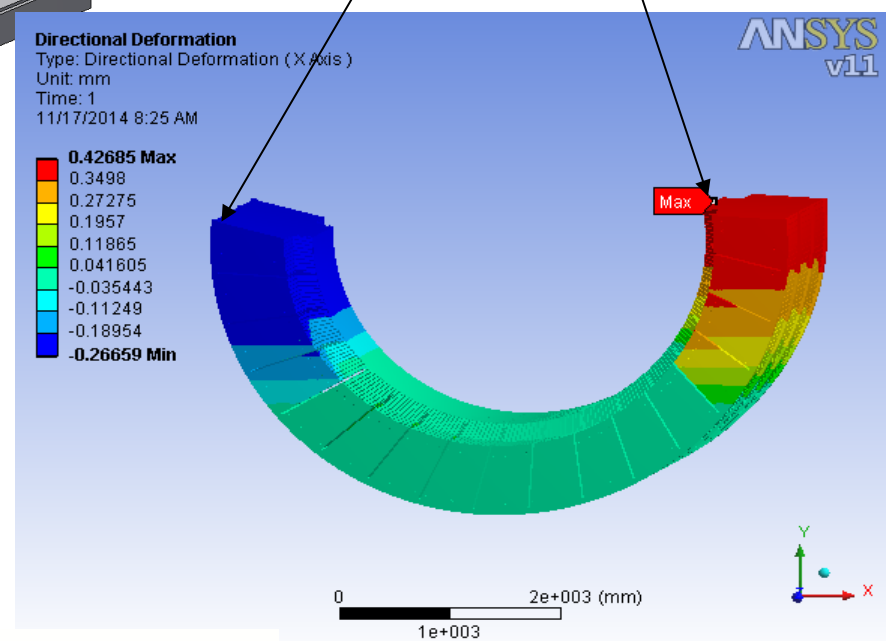

AFTER 180 DEGREE OF OUTER H-CAL ASSEMBLED MAGNET LOADED AND RESTRANED

ASSEMBLY DEFORMATION

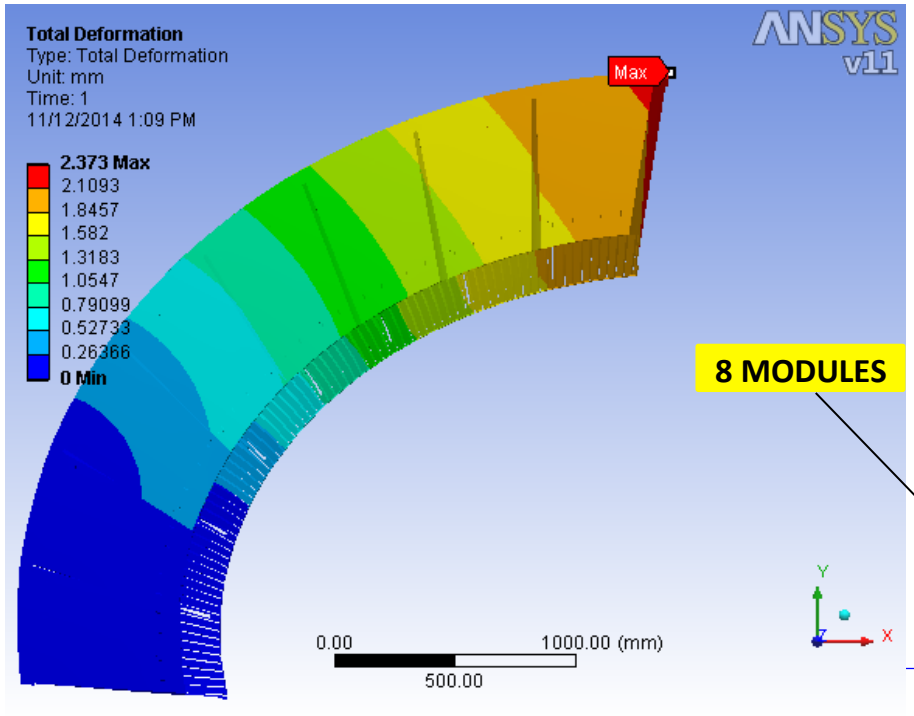

2.3mm DEFORMATION

8 MODULES

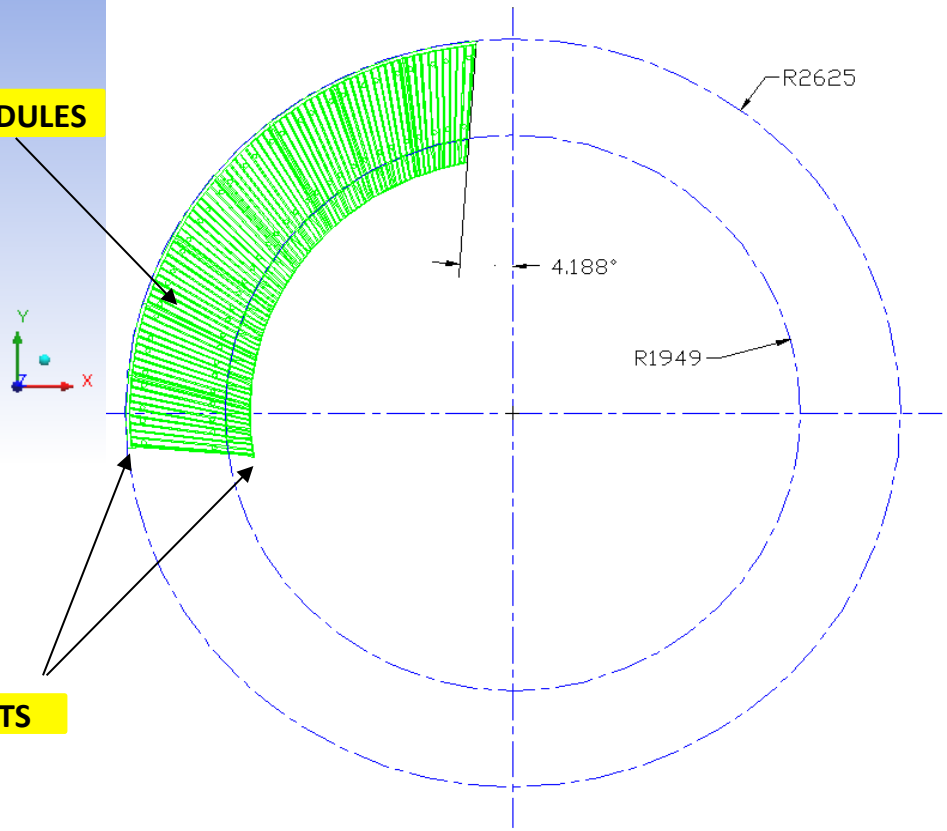

DEFORMATION IS TOO GREAT FOR INSTALLATION OF REMAINING MODULES

FIXED SUPPORTS

ASSEMBLY DEFORMATION

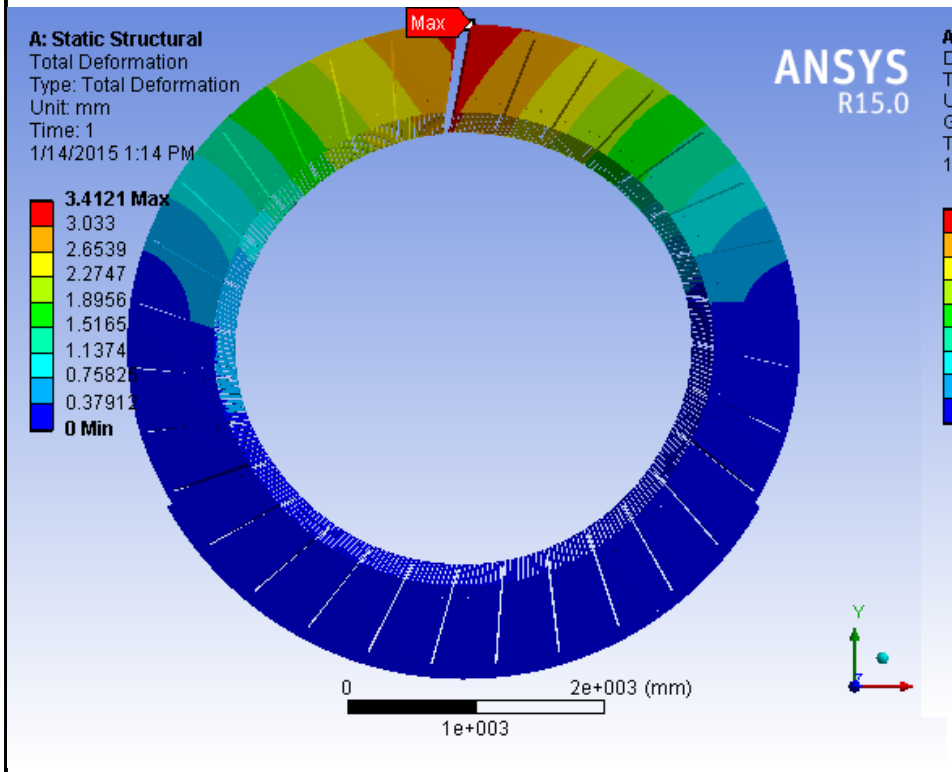

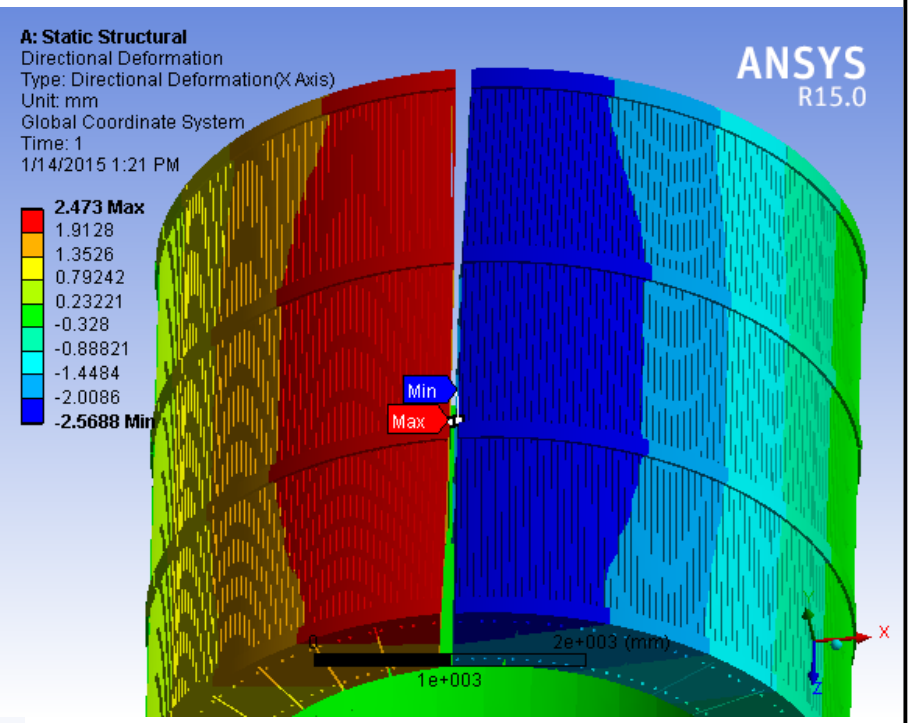

AN EXTERNAL SUPPORT IS REQUIRED
FOR REMAINING SECTORS TO BE INSTALLED

TEMPORARY SUPPORT FOR TOP SECTOR INSTALLATION

FRAME SUPPORT DEFORMATION IS ONLY 0.02mm

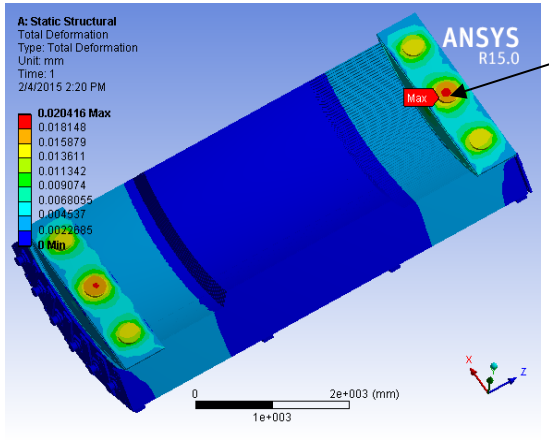

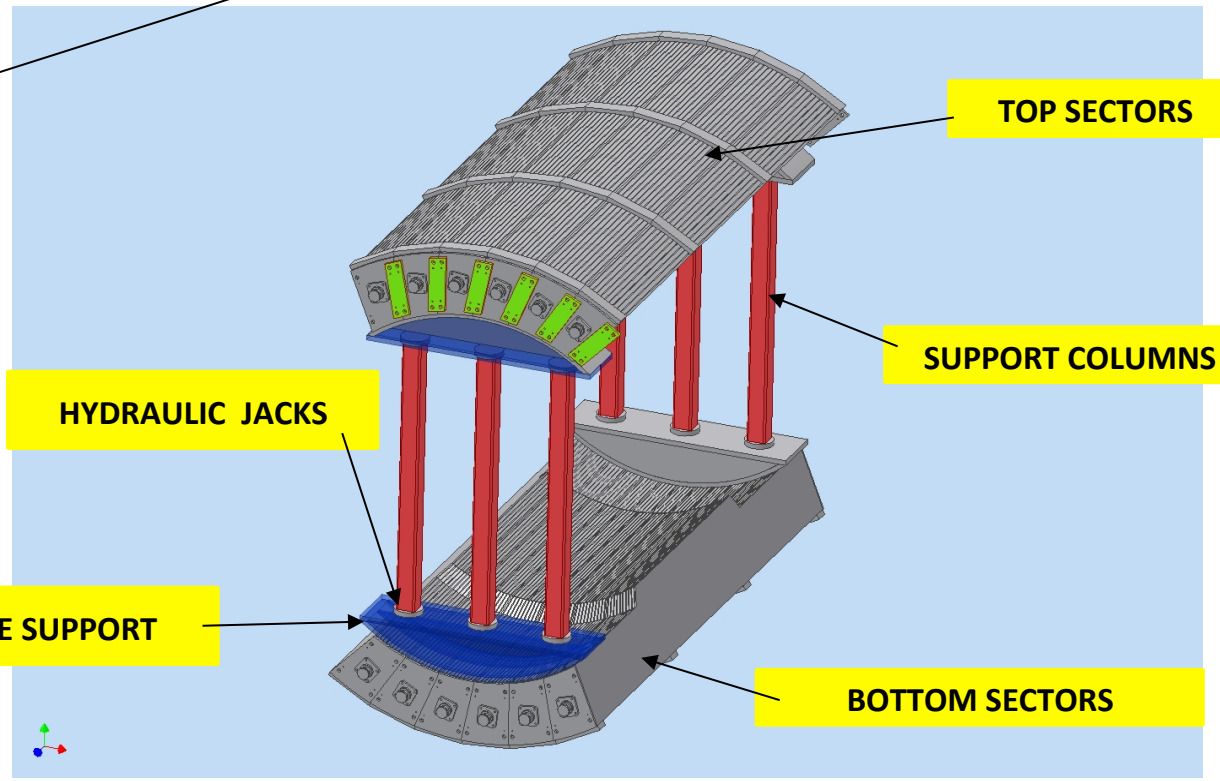

DEFORMATION DOES NOT EFFECT LOWER HCAL SECTORS INTERNAL STRUCTURE

COMPLETED ASSEMBLY ANALYSYS

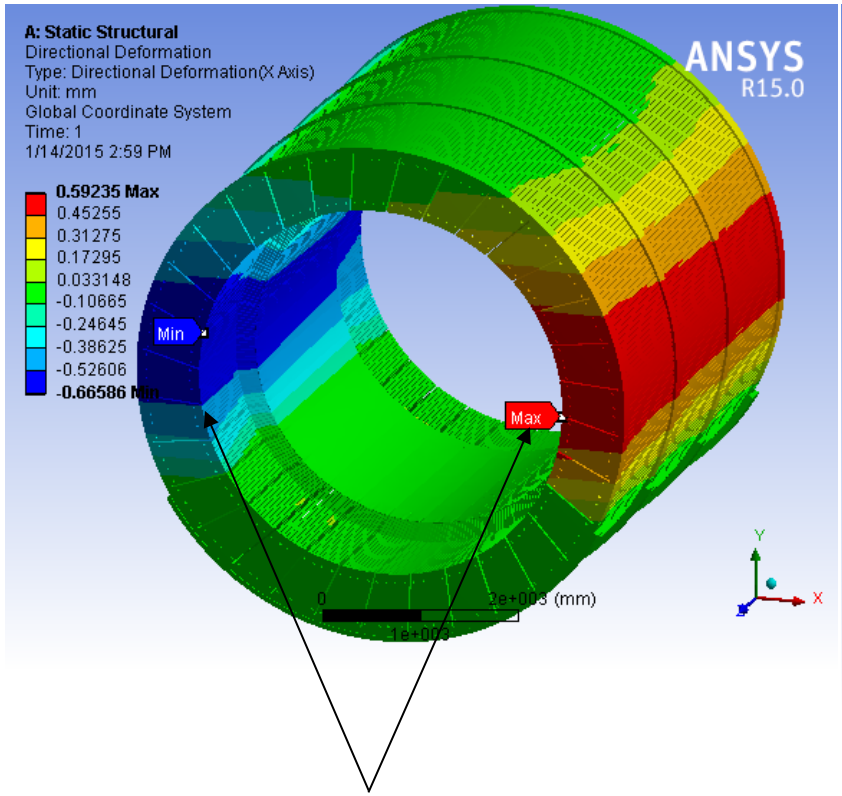

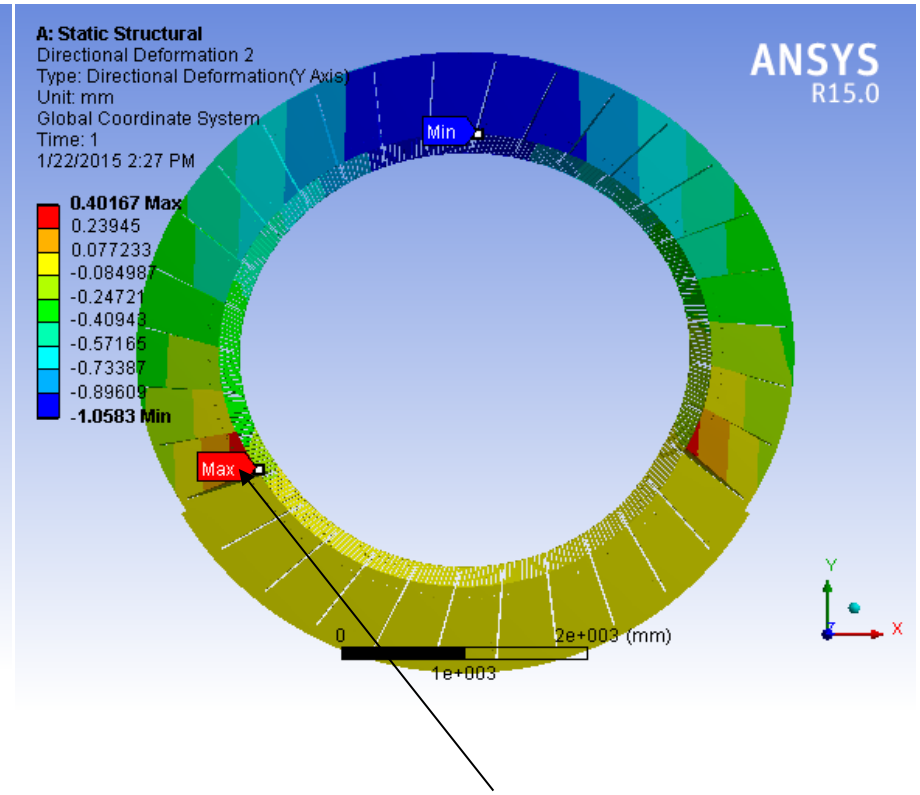

X DEFORMATION +/- 0.6mm

Y DEFORMATION 1mm MAX

FINAL ASSEMBLY DEFORMATION IS WITHIN TOLERANCE

INNER HCAL SECTOR

COMPLETED MODULE

4.3m LG
1 TON

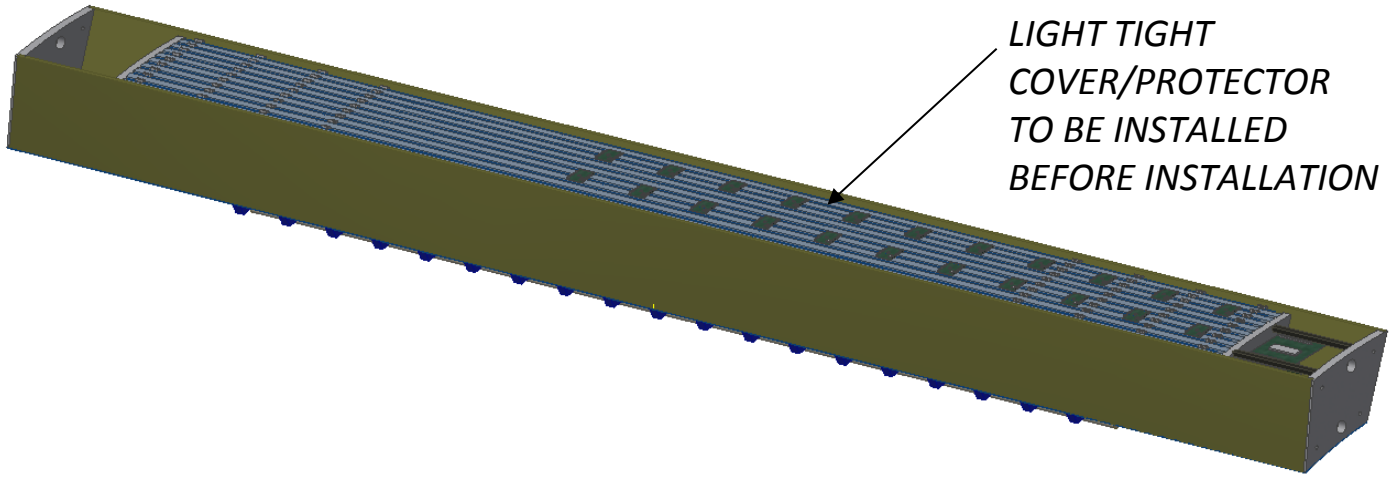

GRAVITY IN -Z DIRECTION (horizontal position)
DEFORMATION

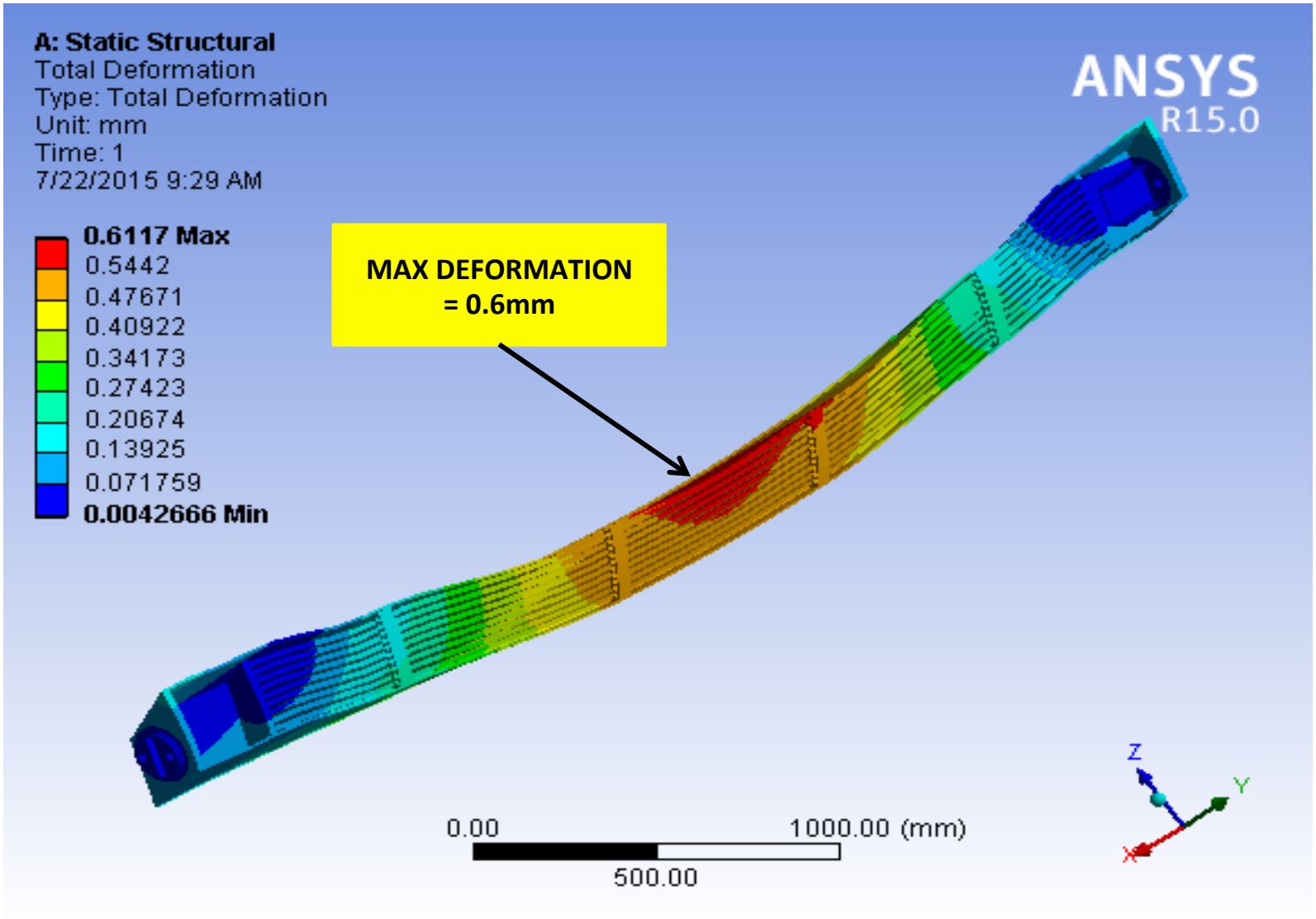

HCAL OVERVIEW

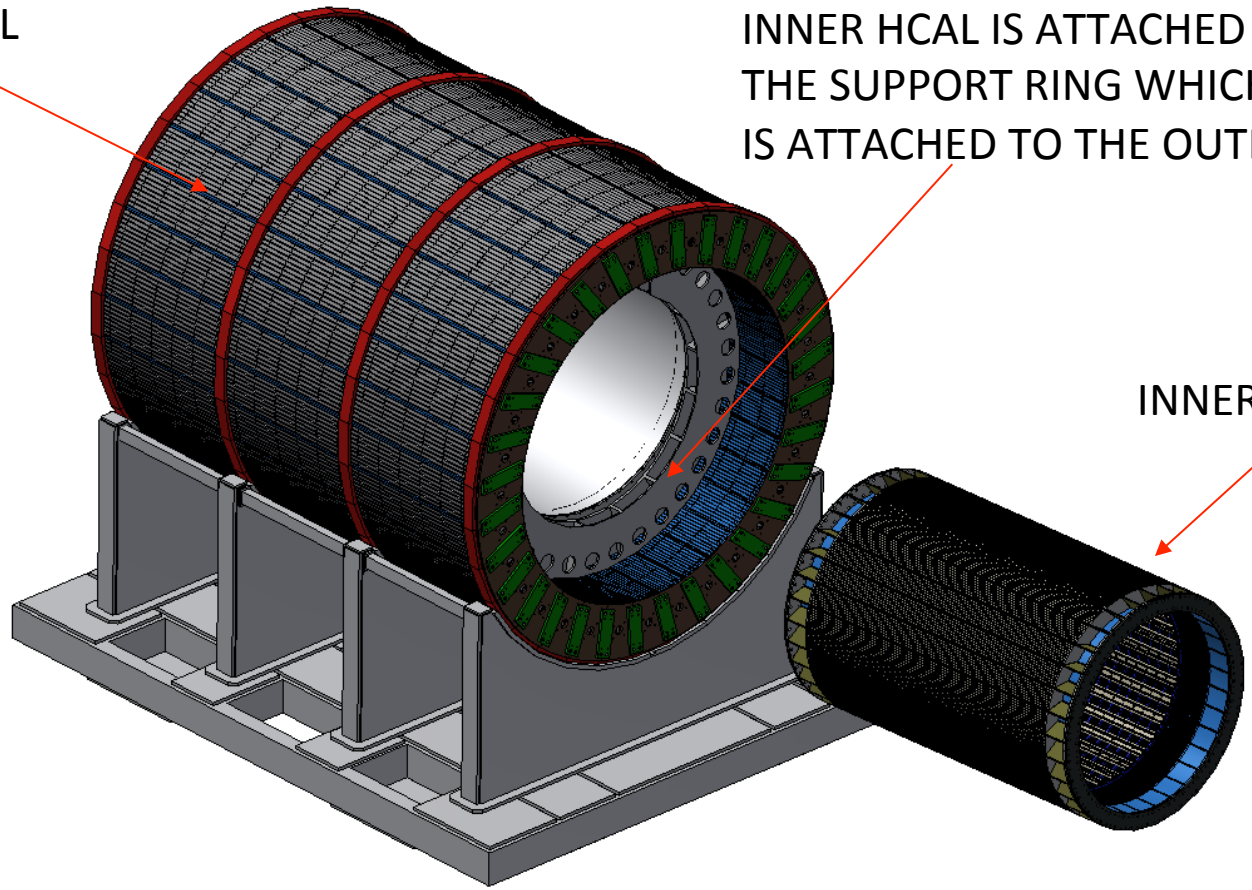

INNER HCAL INSTALLATION

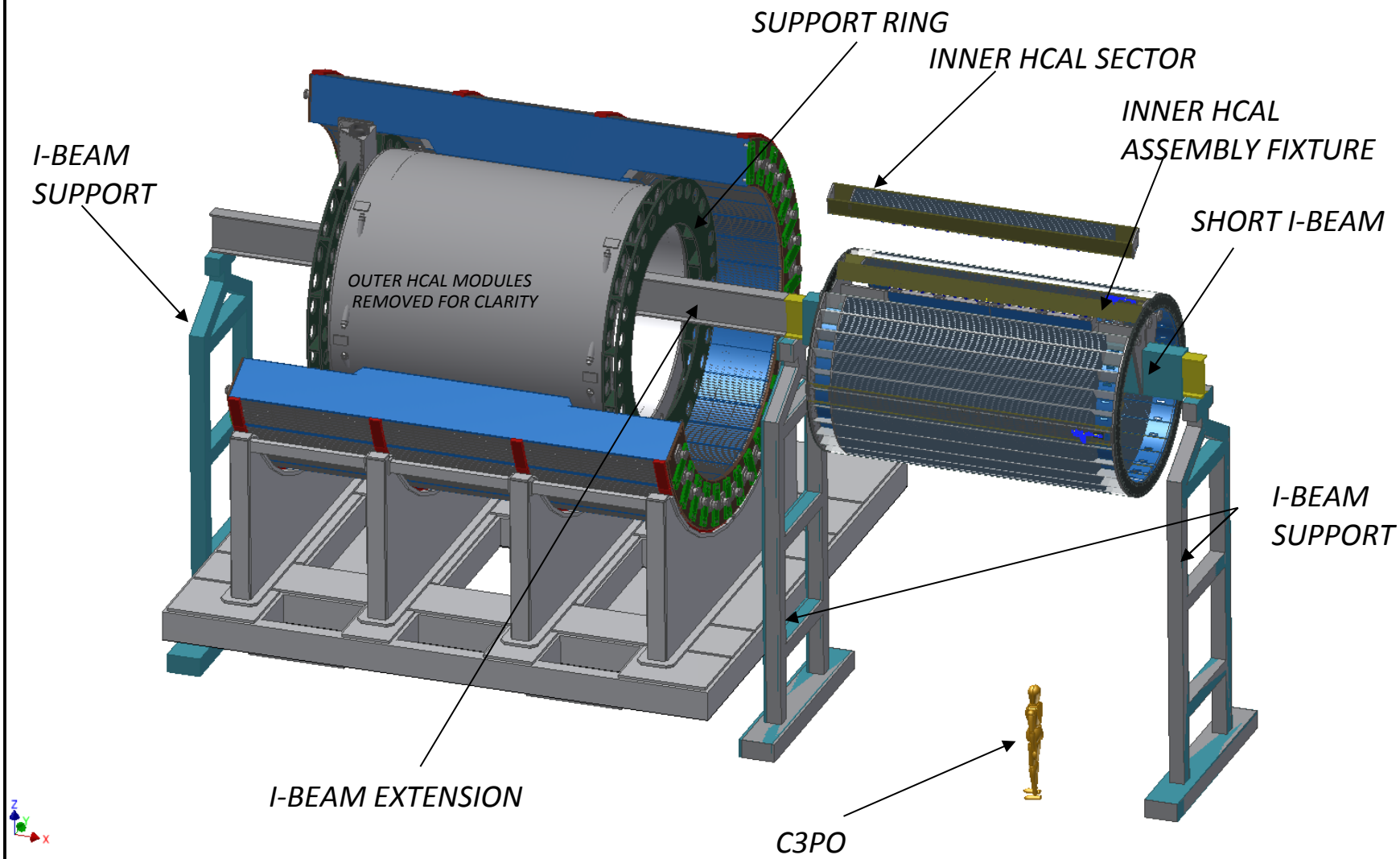

BNL, D. Lynch, R.Ruggiero, A. Gordeev

INTERNAL H-cal SECTOR INSTALLATION SUPPORT STRUCTURE

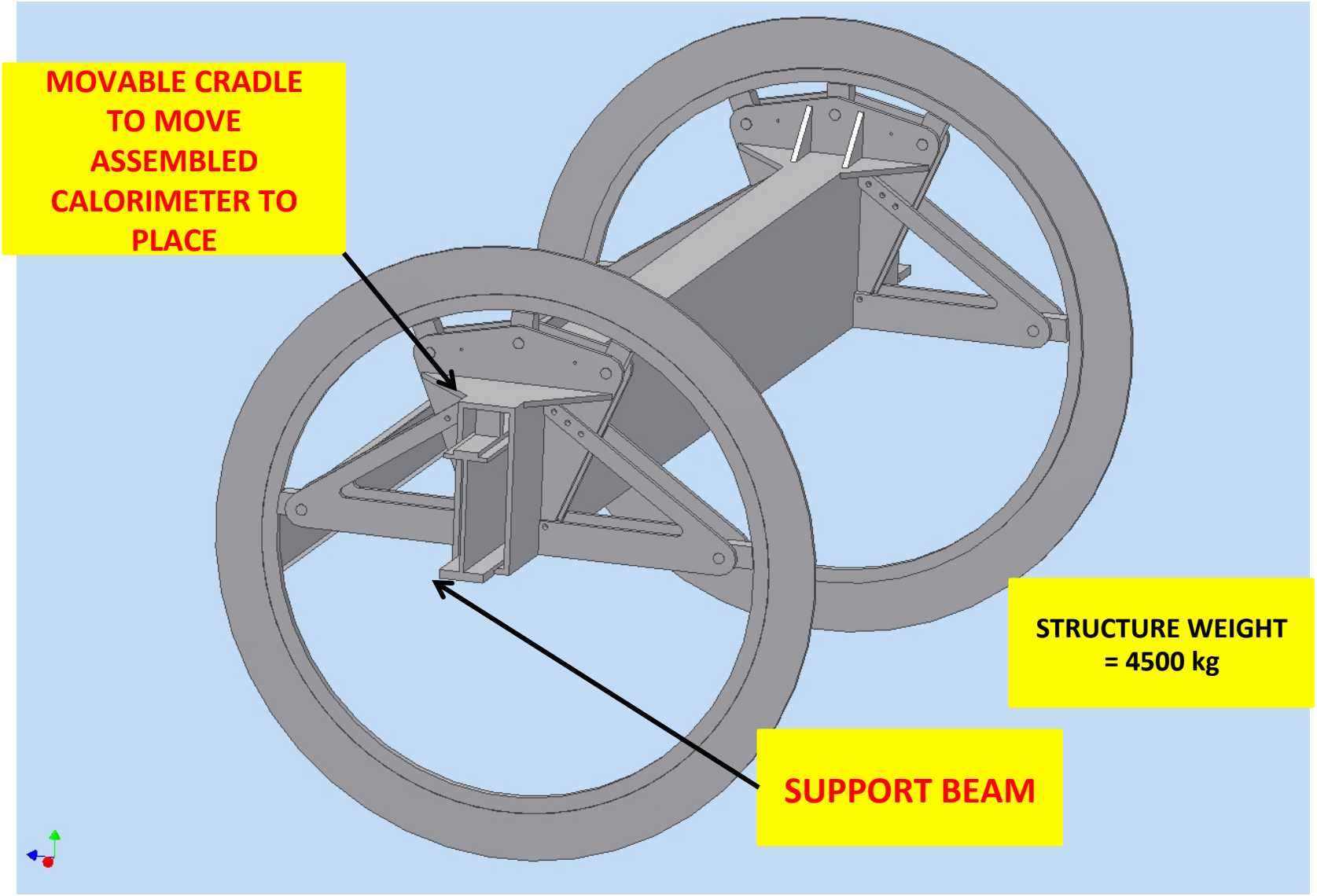

INTERNAL HCal SECTORINSTALLATION
16 SECTORSINSTALLED. ISO VIEW

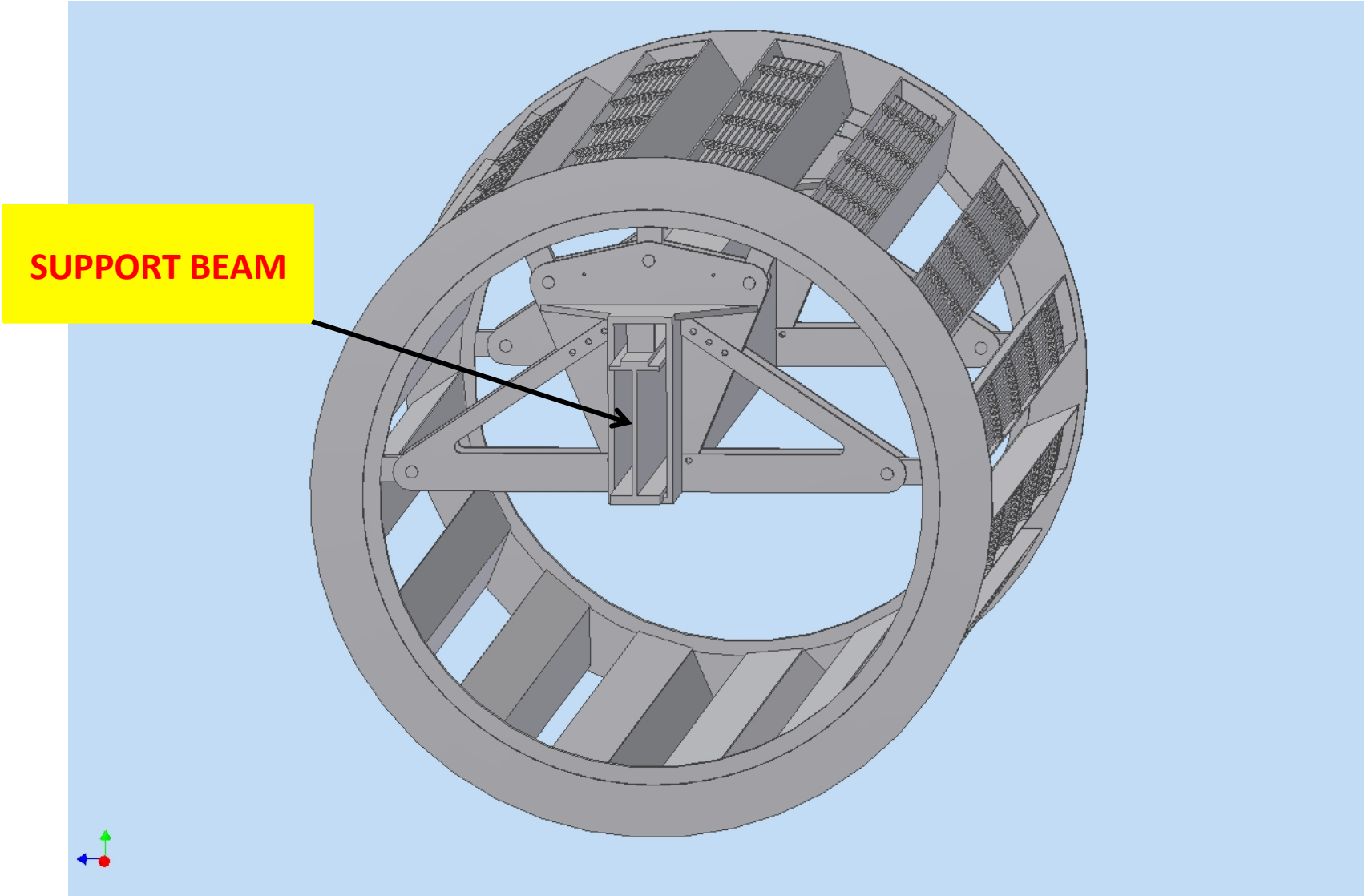

sPHENIX INNER H-CAL
ASSEMBLY AND INSTALLATION

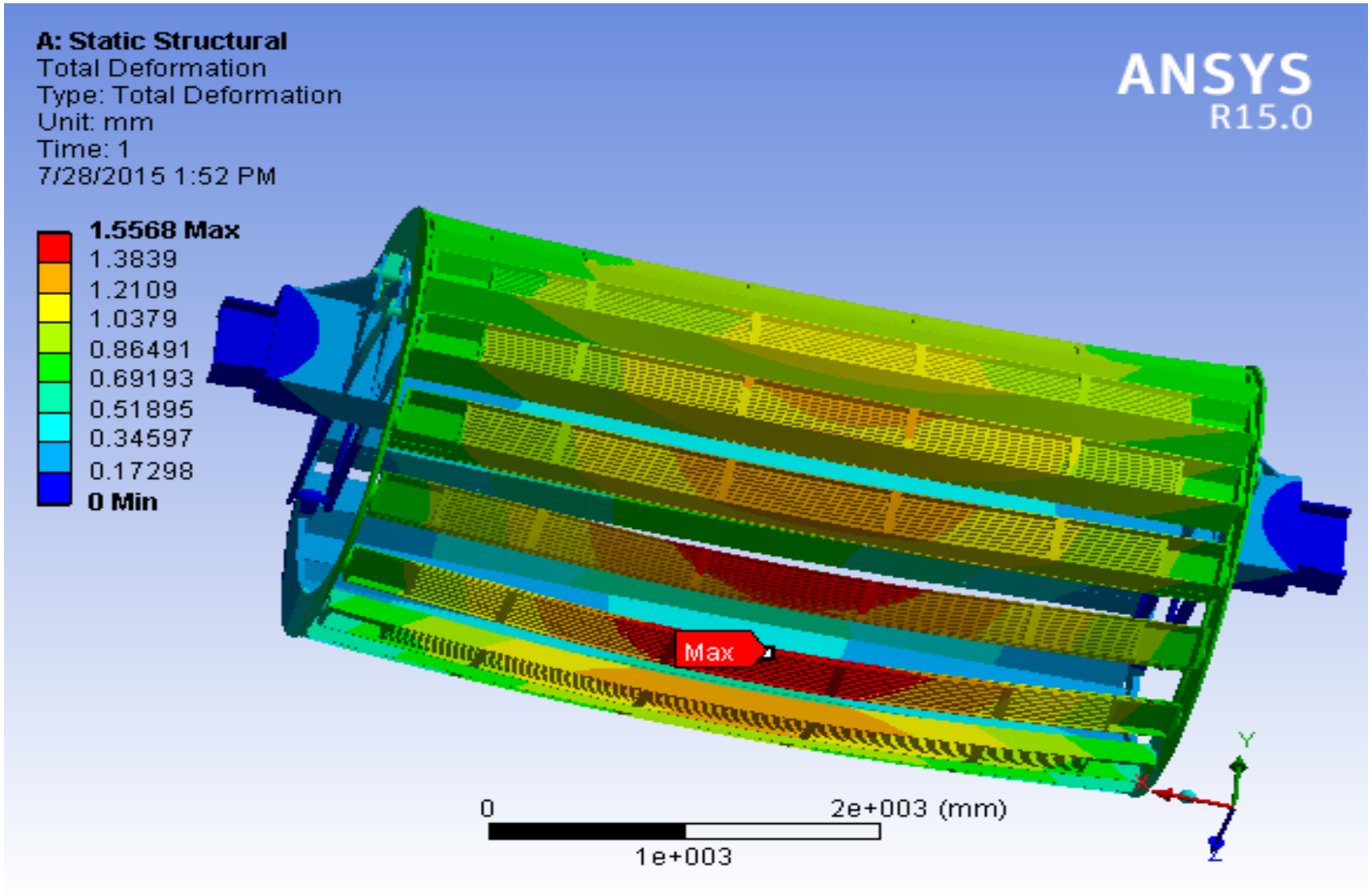

BACKUP SLIDES

OUTER HCAL GEOMETRY

32 MODULES

INNER RADIUS 1.9m
OUTER RADIUS 2.6m

10 ROWS of 7mm Scint Tiles
22 Tiles in each row.

~26.1mm - ~42.4mm
Tapered 1006 Steel Plates

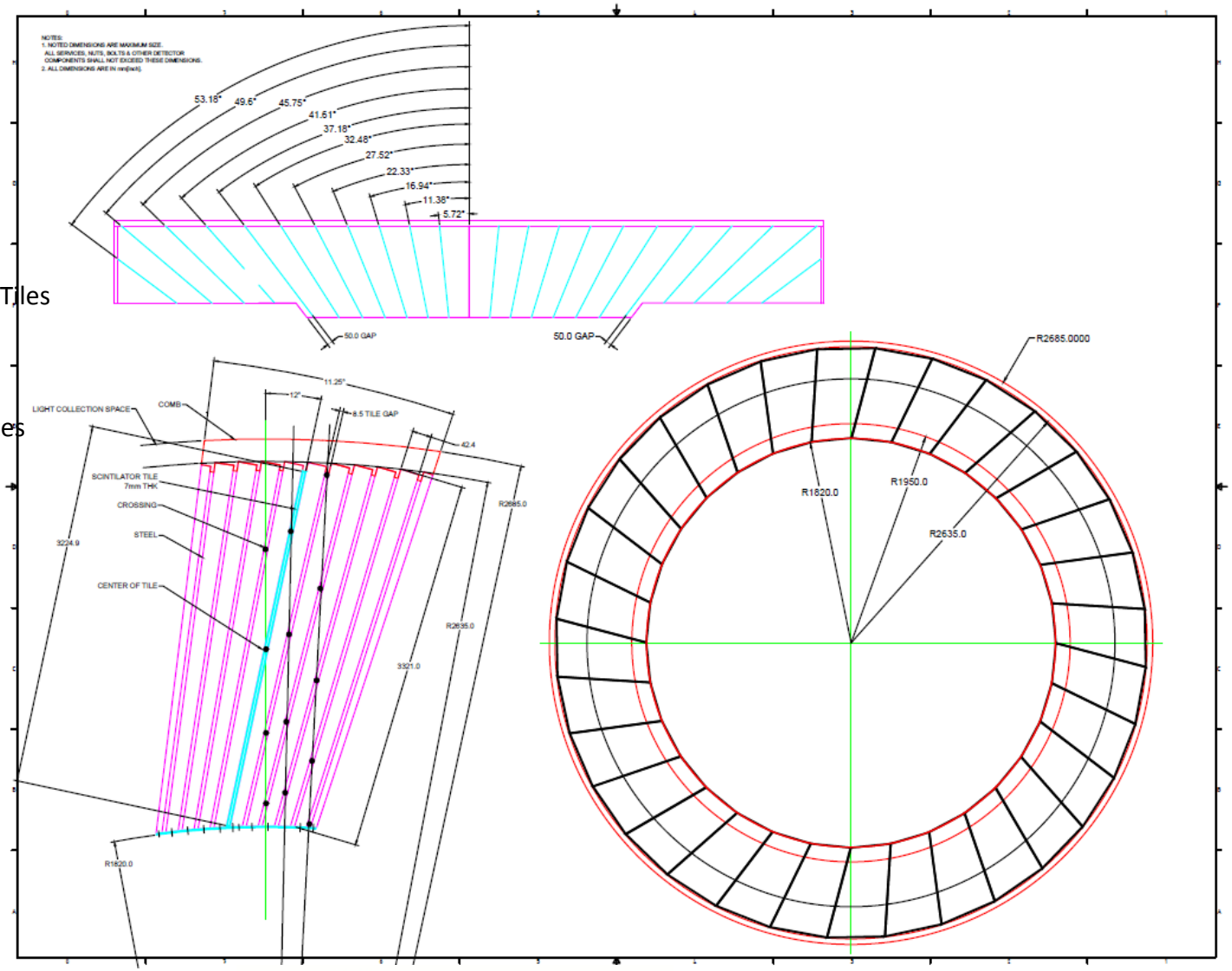

INNER HCAL GEOMETRY

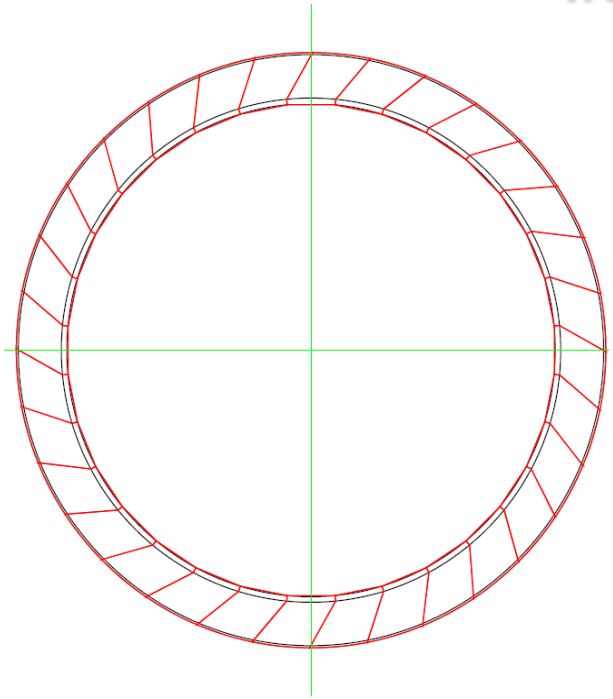

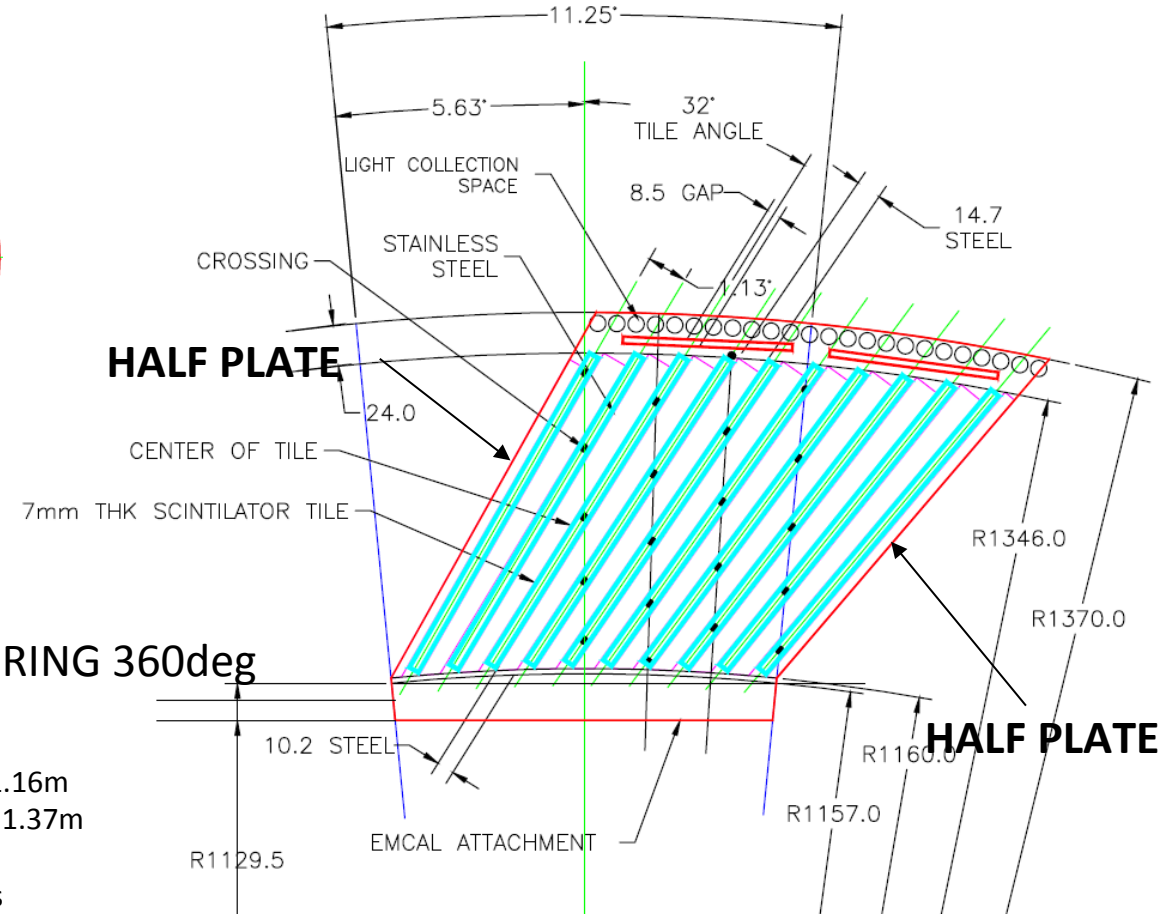

32 MODULES COVERING 360deg

INNER RADIUS ENVELOPE -1.16m
OUTER RADIUS ENVELOPE - 1.37m

10 ROWS of 7mm Scint Tiles
22 Tiles in each row.
32deg Tilt Angle
~10.2mm – ~14.7mm Tapered SST 304 Plates

SPHENIX ENVELOPE CONTROL DRAWING HCAL DIMENSIONS

NOTES:

1. NOTED DIMENSIONS ARE MAXIMUM SIZE.
   ALL SERVICES, NUTS, BOLTS & OTHER DETECTOR
   COMPONENTS SHALL NOT EXCEED THESE DIMENSIONS.
2. **ALL DIMENSIONS ARE IN mm[inch].**

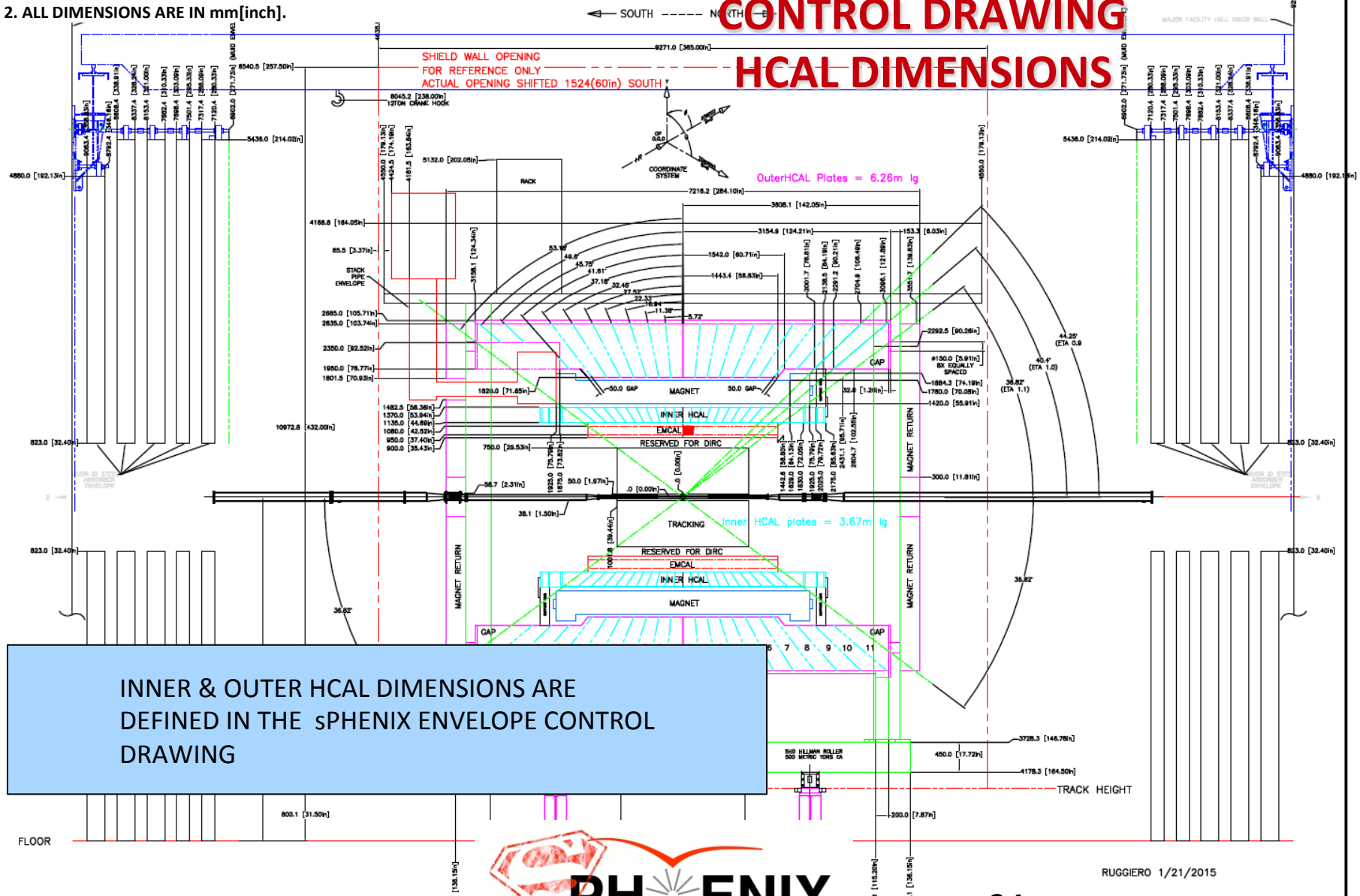

INNER & OUTER HCAL DIMENSIONS ARE DEFINED IN THE sPHENIX ENVELOPE CONTROL DRAWING