High Energy Theory Group Overview and Some Recent Results

Outline

1. High Energy Theory Group
2. Research Activities
3. Some Recent Results
4. Perspective (Future)

William J. Marciano 08/18/2009

1. High Energy Theory Group (FY2009)

- Permanent Staff (6)
  M. Creutz
  S. Dawson
  W. Kilgore
  W. Marciano
  F. Paige
  A. Soni (Group Leader)
- Associate Physicist (1)
  H. Davoudiasl
- Assistant Physicist (1)
  T. Izubuchi (50% RBRC)
- T.L. Trueman, Emeritus
- Research Associates (4)
  S. Gopalakrishna
  J. Kile
  C. Sturm
  R. Van de Water (Goldhaber Fellow)
- Also:
  O. Witzel (~50% software)
  (SciDAC Research Associate)
  P. Jaiswal
  (Stony Brook University Student)
  L. Almeida
  (Stony Brook University Student)

2. Research Activities

Central Role in Physics Department

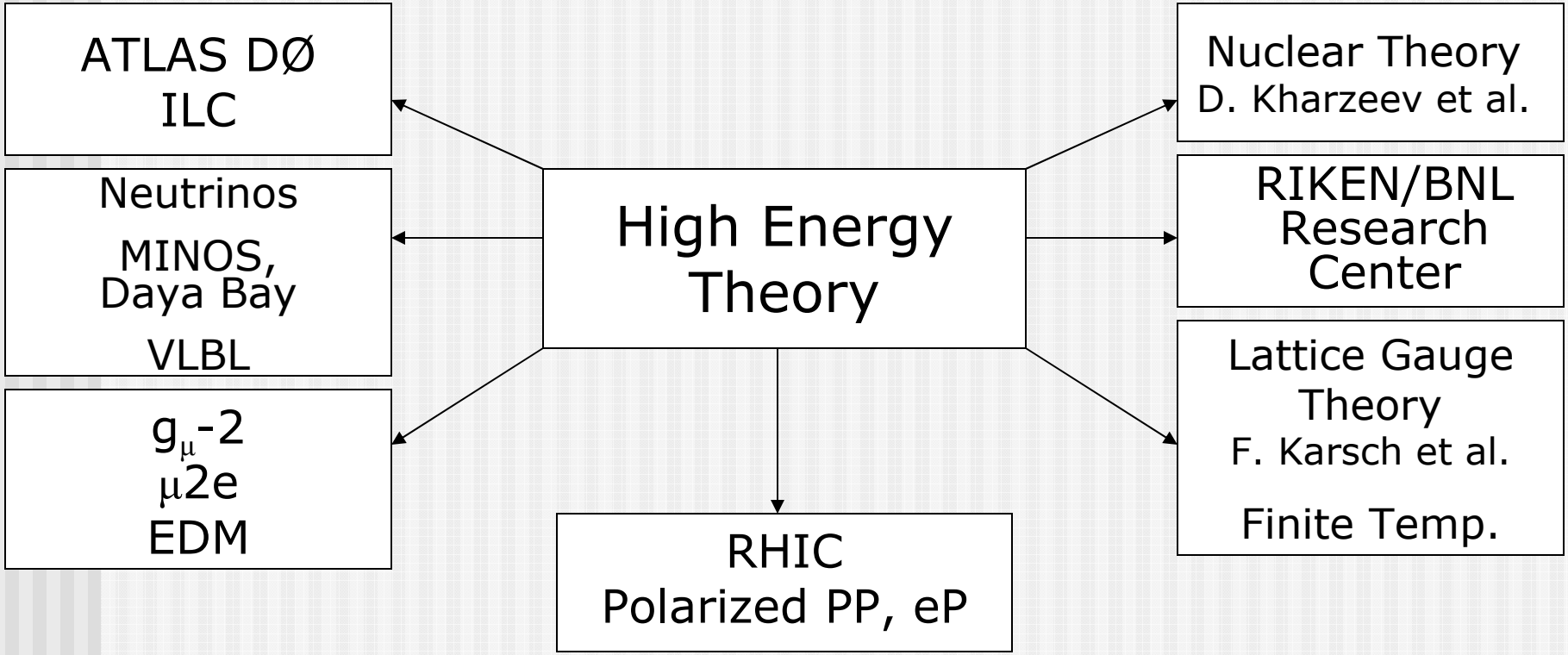

Unique Environment

Additional Activities & Awards

M. Creutz
Adjunct Stony Brook University Professor
Gian Carlo Wick Gold Medal Award
Humboldt Research Award (Mainz)

S. Dawson
Adjunct Stony Brook University Professor

W. Marciano
Adjunct Yale University Professor
Humboldt Research Award (Karlsruhe)
Particle Data Group

H. Davoudiasl
Presidential Early Career Award for Scientists and Engineers

Diverse Research Program

- *Lattice Gauge Theories: Formalism and Phenomenology*: M. Creutz, A. Soni (0.5), T. Izubuchi, R. Van de Water, C. Sturm
- *LHC Collider Physics*: S. Dawson, W. Kilgore, F. Paige
- *Dark Matter, Extra Dimensions, LHC implications*: A. Soni,
- H. Davoudiasl, S. Gopalakrishna, J. Kile
- *B Physics and CP Violation*: A. Soni
- *Perturbative QCD*: S. Dawson, W. Kilgore, C. Sturm
- *Electroweak Physics (Precision, Rare, Low Energy, Neutrinos, eRHIC)*: W. Marciano

3. Some Recent Results

Future Improvements (A. Czarnecki and W. Marciano):

- **Qweak, Moller at JLAB**
- **e-Ion Collider**
- **Under Study**

$\sin^2\Theta_W(Q^2)$

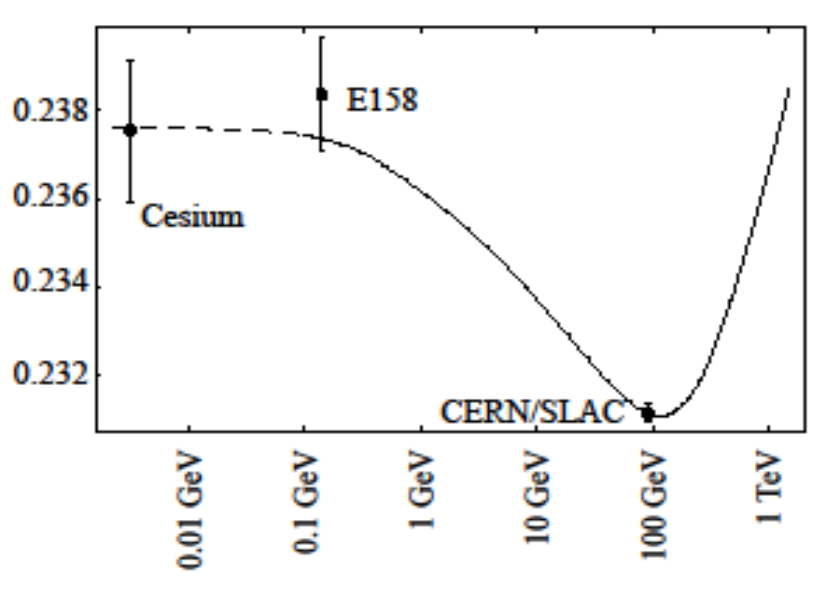

Q^2

Running of $\sin^2\Theta_W(Q^2)$

Five-loop QED contributions to the muon anomaly a_μ (C. Sturm)

Consider 10 gauge invariant sets of diagrams $I(a)$-$I(j)$,
photon propagator with electron loops only, example diagrams:

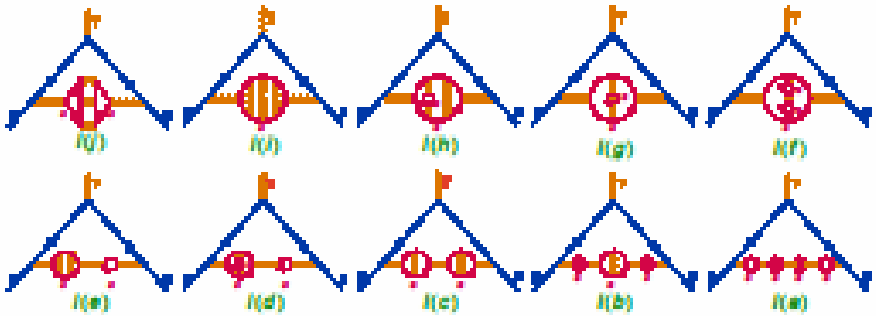

Analytical result: $a_\mu^{\text{asymp.}} = \sum_{l\geq 2} a_\mu^{\text{asymp.},(l)} \left(\frac{\alpha}{\pi}\right)^l$

$$
\begin{aligned}
a_\mu^{\text{asymp.},(5)} = & -\frac{2964996193}{41990400} + \frac{45709}{58320}\pi^2 + \frac{212701}{518400}\pi^4 - \frac{4488523}{259200}\zeta_3 + \frac{35}{144}\pi^2\zeta_3 + \frac{4}{3}\zeta_3^2 + \frac{10909}{720}\zeta_5 \\
& + \frac{35}{8}\zeta_7 - \frac{55}{24}\pi^2\ln 2 - \frac{53}{675}\pi^4\ln 2 + \frac{6121}{4320}\pi^2\ln^2 2 - \frac{16}{135}\pi^2\ln^3 2 - \frac{6121}{4320}\ln^4 2 \\
& + \frac{16}{225}\ln^5 2 - \frac{6121}{180}a_4 - \frac{128}{15}a_5 + \ell_{\mu e}\left[\frac{1416095}{279936} + \frac{41}{972}\pi^2 - \frac{1855}{432}\zeta_3 - \frac{10}{3}\zeta_5 - \frac{2}{9}\pi^2\ln 2\right] \\
& + \ell_{\mu e}^2\left[-\frac{1507}{1944} + \frac{8}{81}\pi^2 + \frac{4}{3}\zeta_3\right] - \frac{83}{243}\ell_{\mu e}^3 + \frac{8}{81}\ell_{\mu e}^4 + \mathcal{O}\left(\frac{m_e}{M_\mu}\right), \qquad \ell_{\mu e} = \ln\frac{M_\mu}{m_e}, \quad a_n = \mathrm{Li}_n\left(\frac{1}{2}\right),
\end{aligned}
$$

$(I(a) + I(b) + \cdots + I(j))$

Allows comparisons with numerical methods

LHC SUSY Studies (F. Paige)

SUSY gives jets + E_T^{miss} + possible leptons or τ's. Distributions with 1 lepton for several mSUGRA points (left) and reach (right) for $1\,\text{fb}^{-1}$ at $14\,\text{TeV}$:

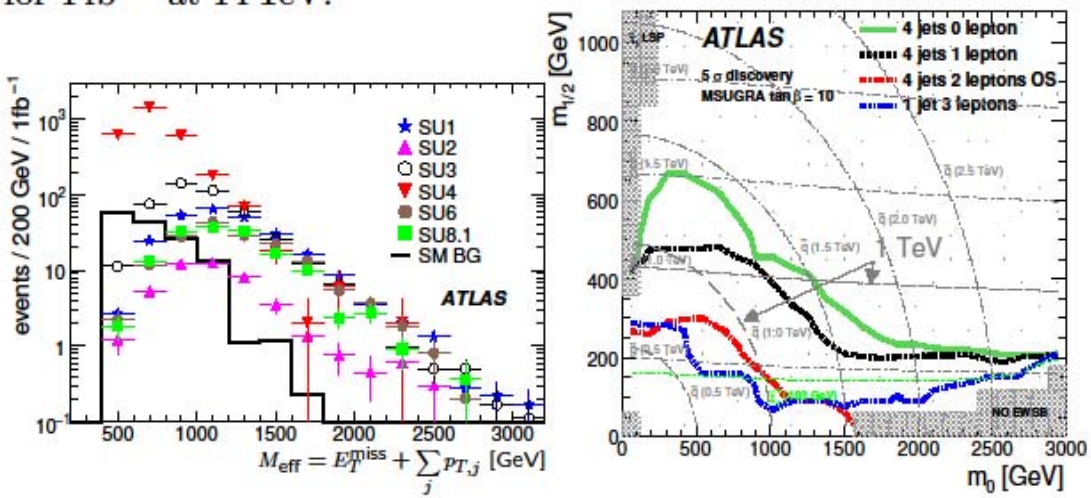

No public results for 7 TeV, but discovery reach probably similar to existing Tevatron limits.

4. Perspective (Future)

BNL is: **ATLAS Center, QCD Lab, Supercomputer-Lattice**

Respond to Discoveries, Big Lattice Effort, LHC Phenomenology

Remain a strong and diverse group

-- but dwindling resources (aging group)

	1994	**Now (2009)**	**2010**
Permanent Staff	7	6	6
Associate Physicist	2	1	1
Assistant Physicist	0	1	1
Postdocs	4	4	4 + 1(PECASE)
+ Summer Visitors, Students, and Workshops.			

→ *Need Visitor and Student Support & Additional Assistant Physicist(s)*