sPHENIX INNER H-CAL ASSEMBLY AND MODULE INSTALLATION STUDY

D. Lynch, R. Ruggiero, A. Gordeev

HCAL OVERVIEW

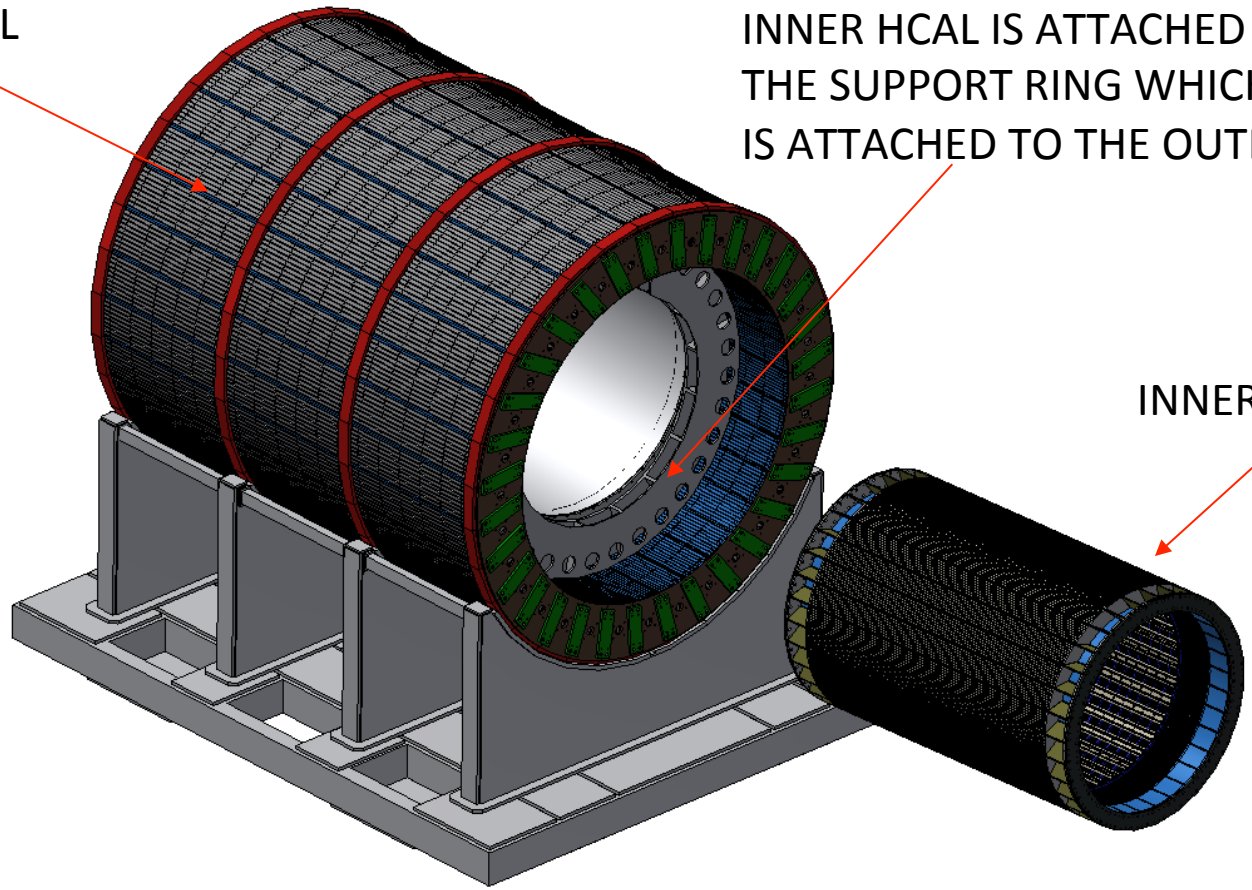

INNER HCAL MODULE

COMPLETED MODULE

4.3m LG
1 TON

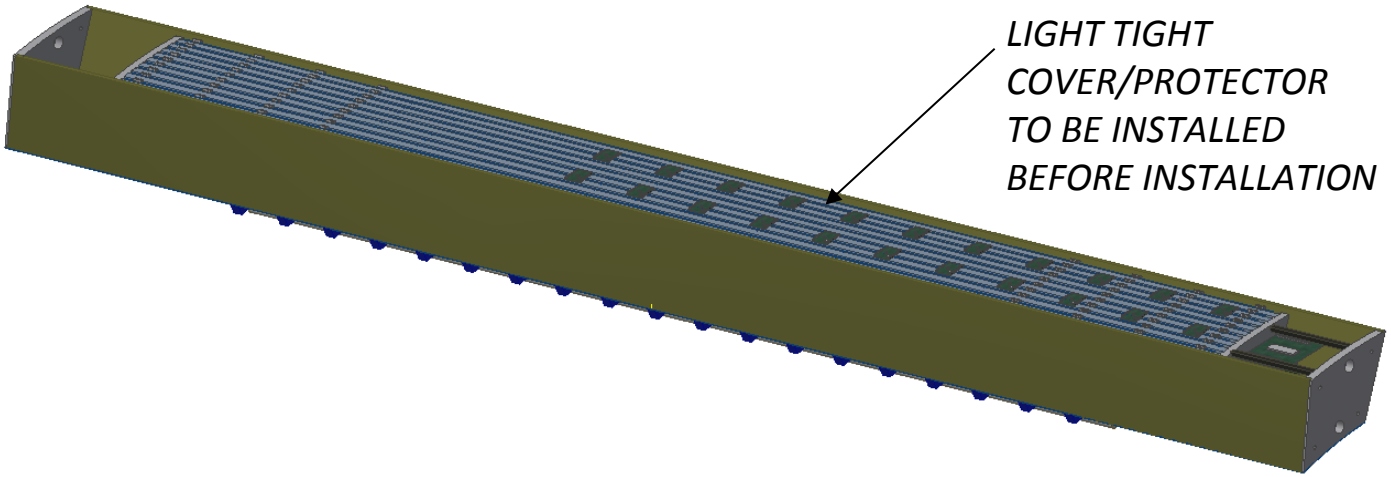

INNER HCAL INSTALLATION

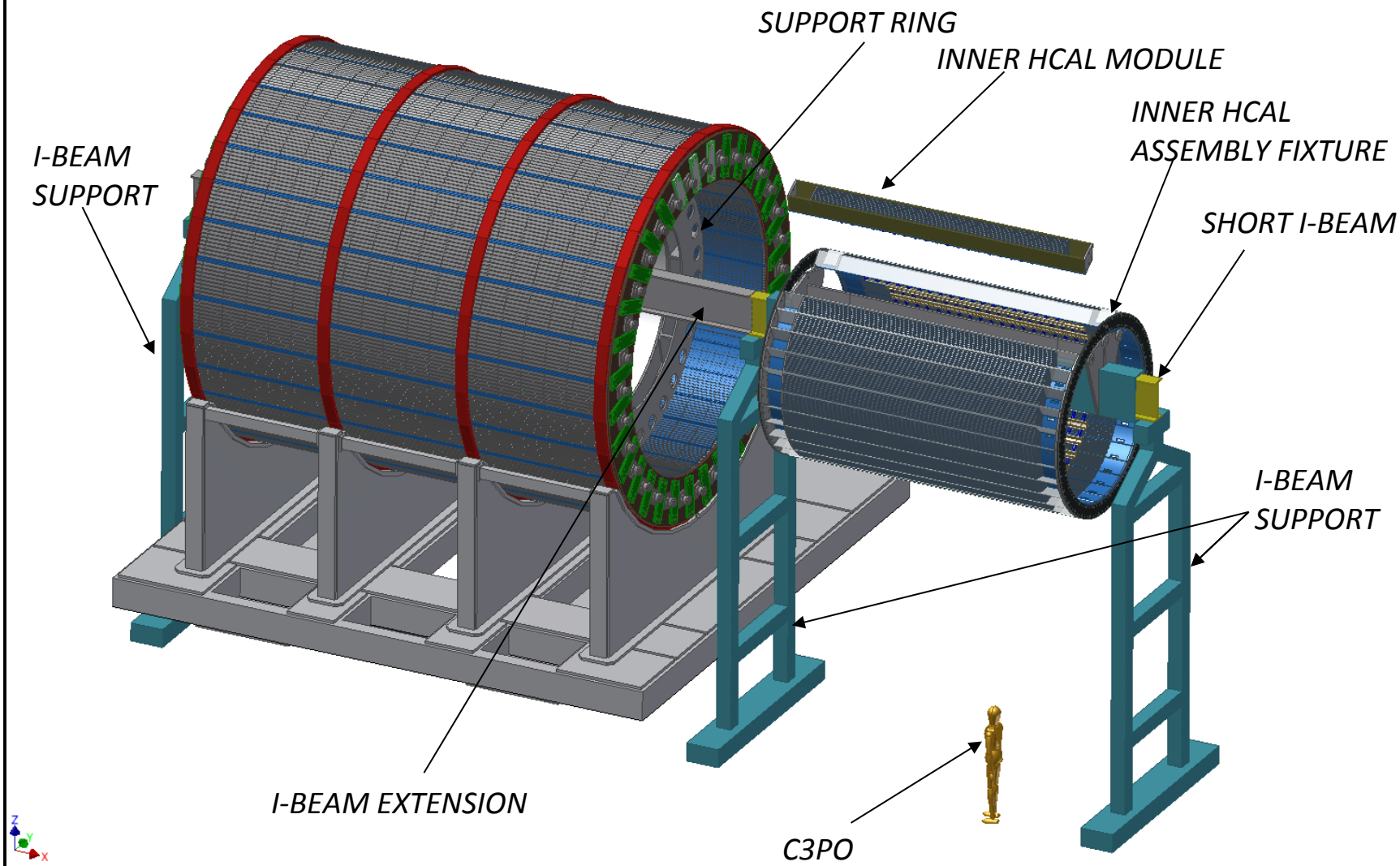

BNL, D. Lynch, R.Ruggiero, A. Gordeev

xPHENIX INNER H-cal ASSEMBLY AND INSTALLATION

PROPOSAL. Tooling . Transportation cart

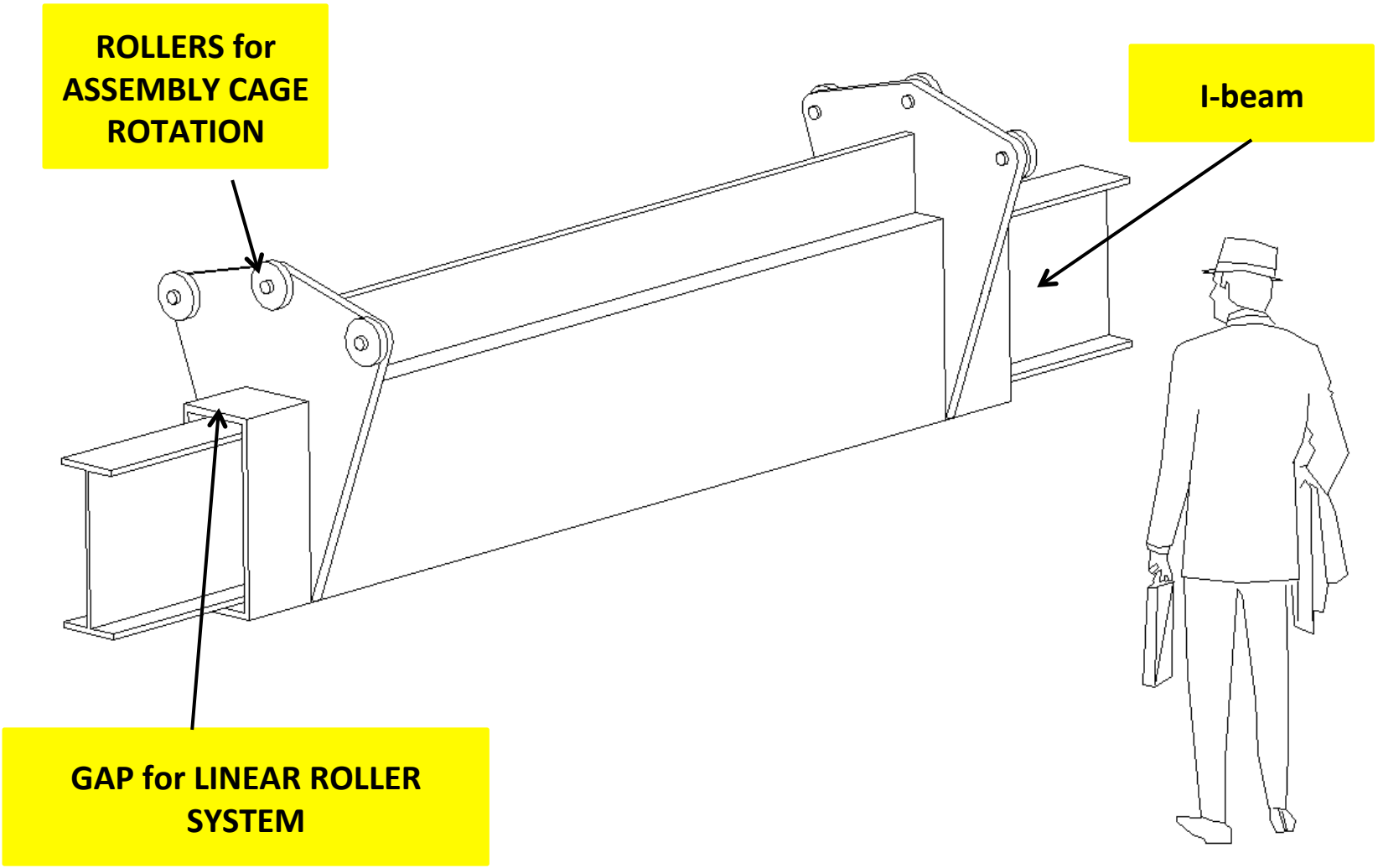

xPHENIX INNER H-cal ASSEMBLY AND INSTALLATION

PROPOSAL. Tooling . Transportation cart. MODULE INSTALLATION PROCEDURE

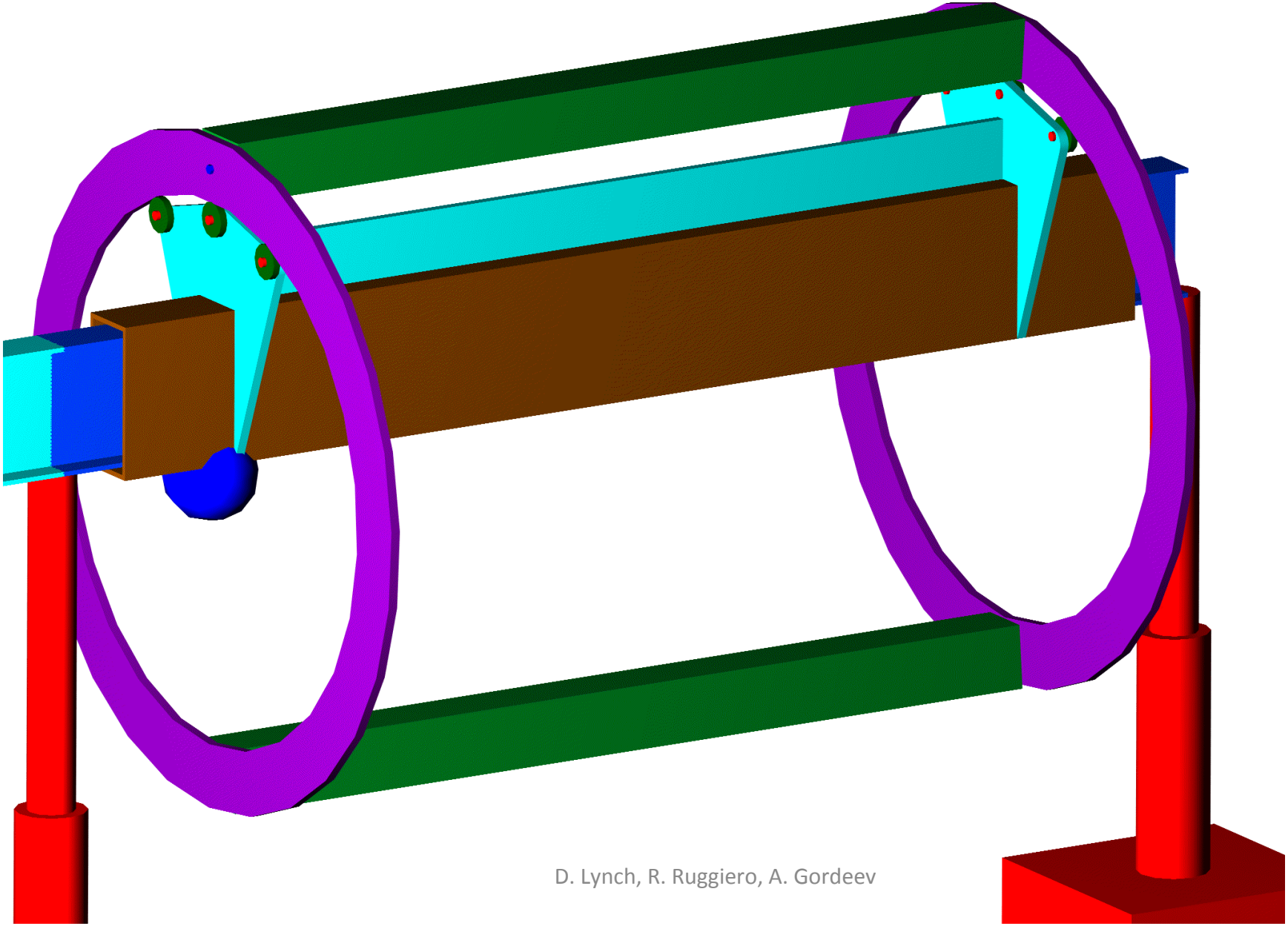

INNER HCAL INSTALLATION FIXTURE

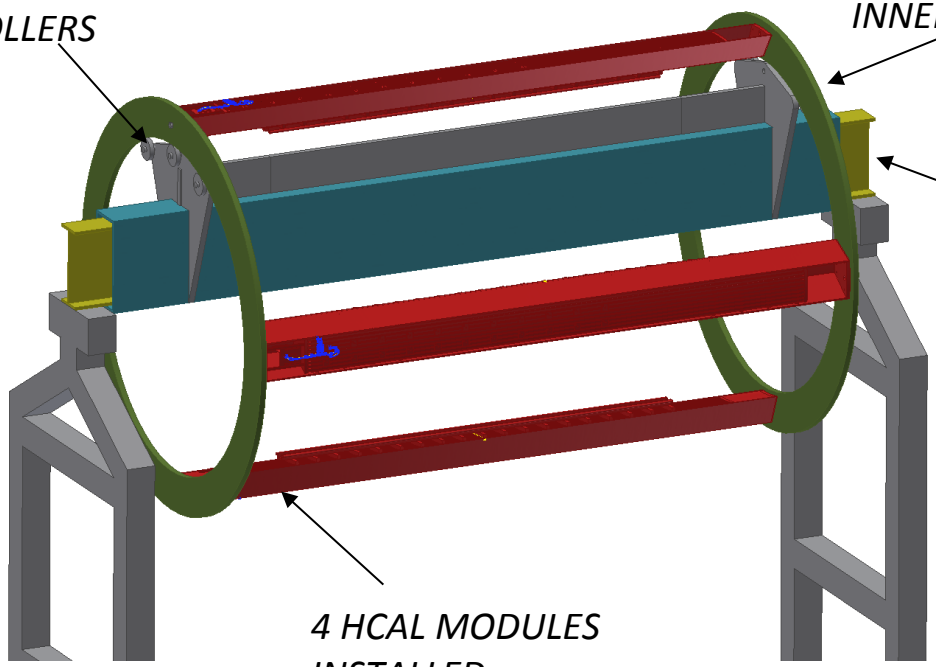

INNER HCAL EXPLODED VIEW

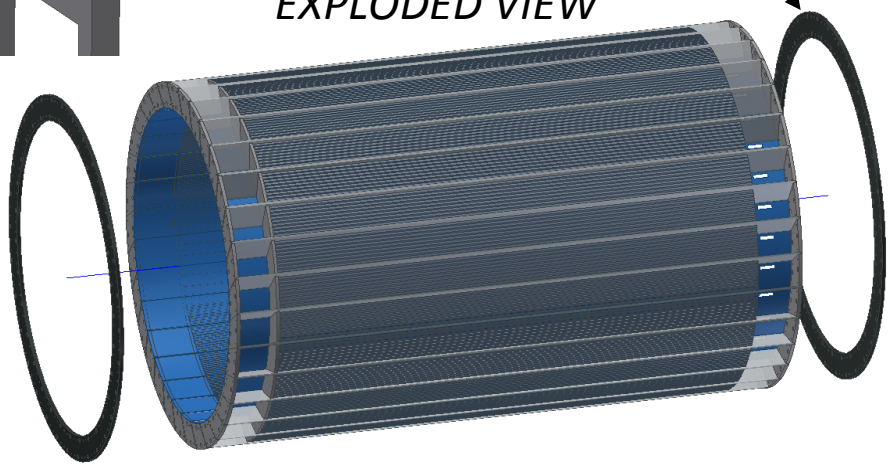

BNL, D. Lynch, R.Ruggiero, A. Gordeev

HCAL GEOMETRY

PERMANENT MODULE LOADING POSITION

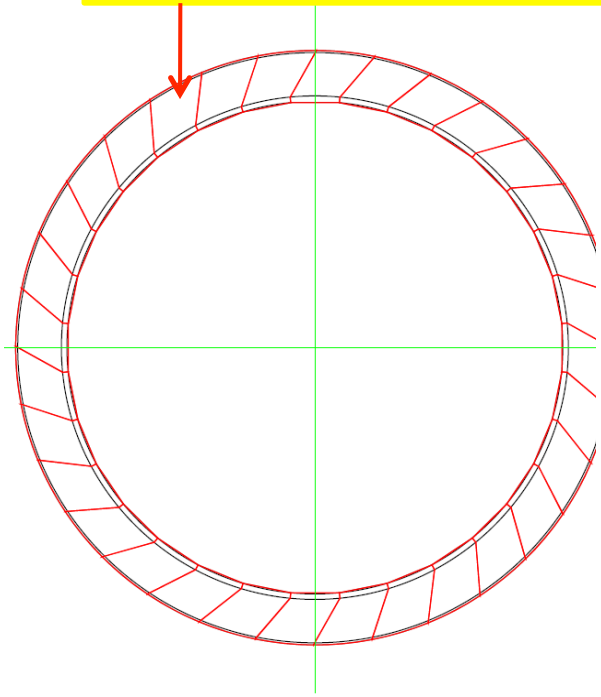

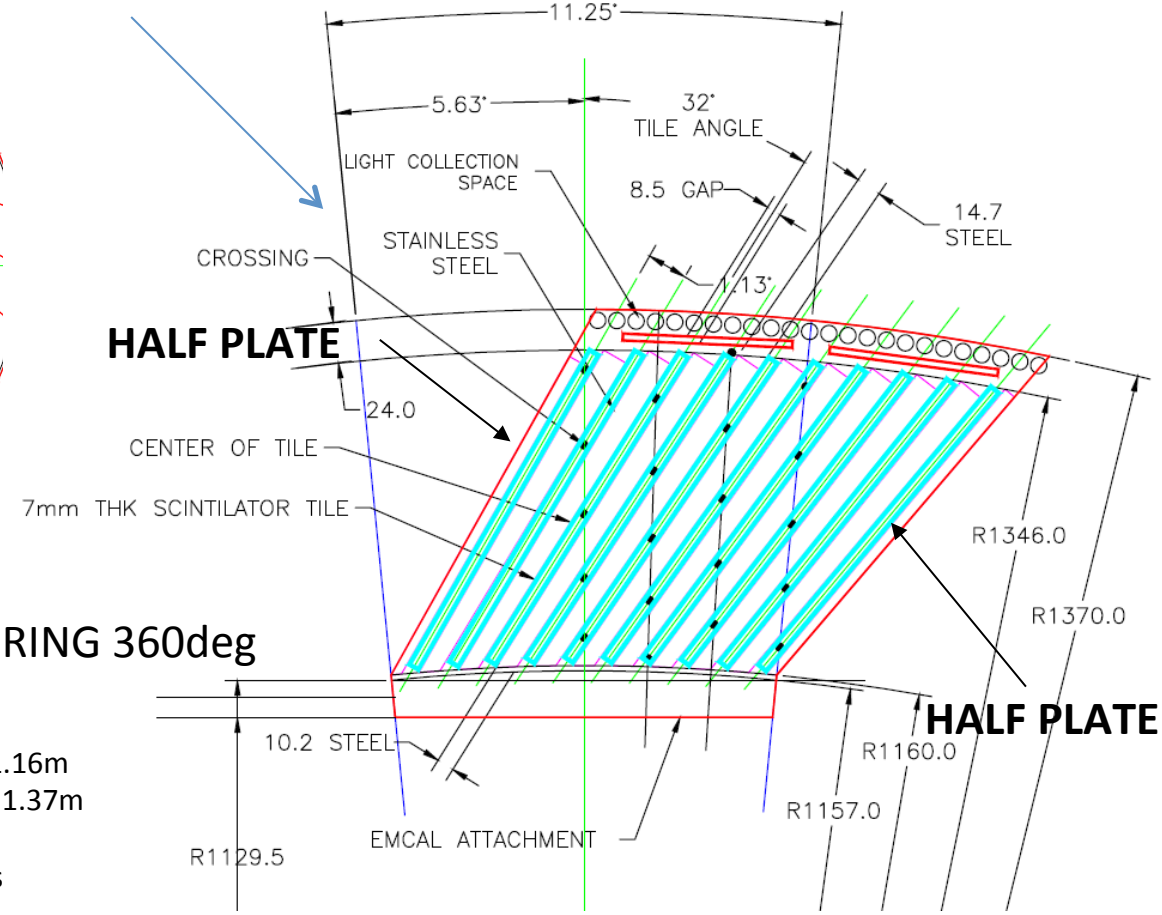

32 MODULES COVERING 360deg

INNER RADIUS ENVELOPE -1.16m
OUTER RADIUS ENVELOPE - 1.37m

10 ROWS of 7mm Scint Tiles
22 Tiles in each row.
32deg Tilt Angle
~10.2mm – ~14.7mm Tapered SST 304 Plates

MODULE FRONT (REAR) VIEW

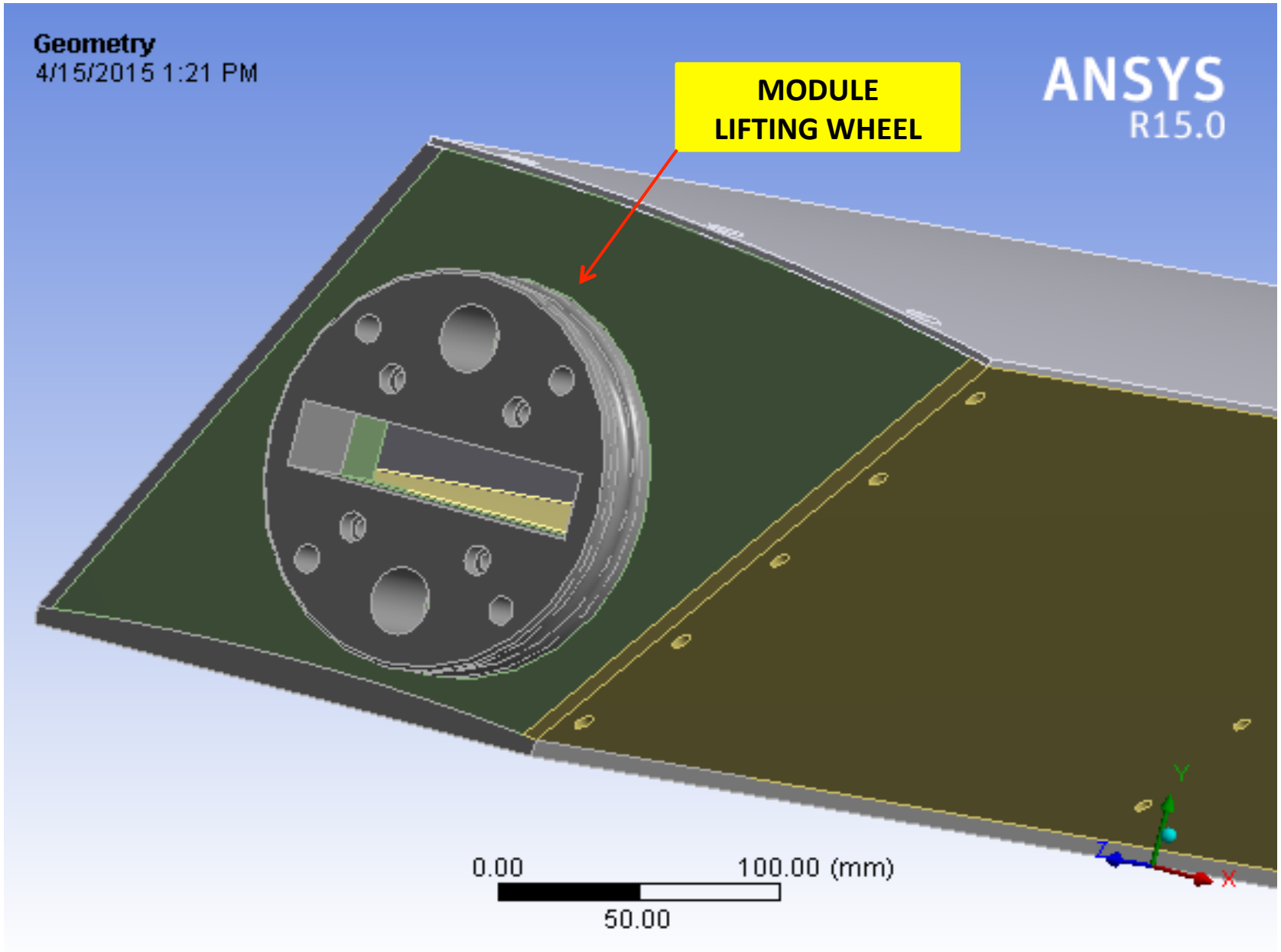

PERMANENT MODULE LOADING POSITION

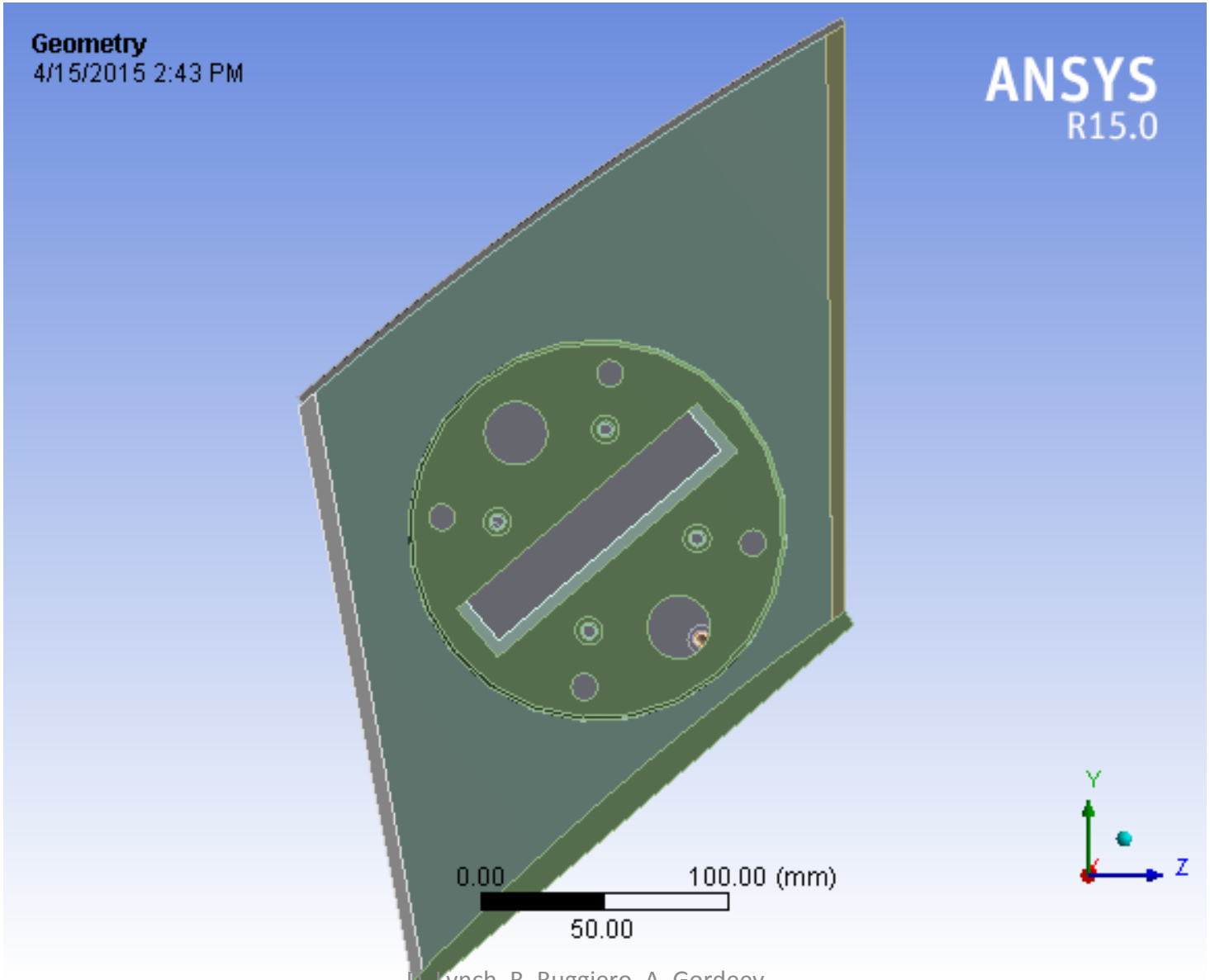

MODULE TOTAL DEFORMATION DURING LOADING

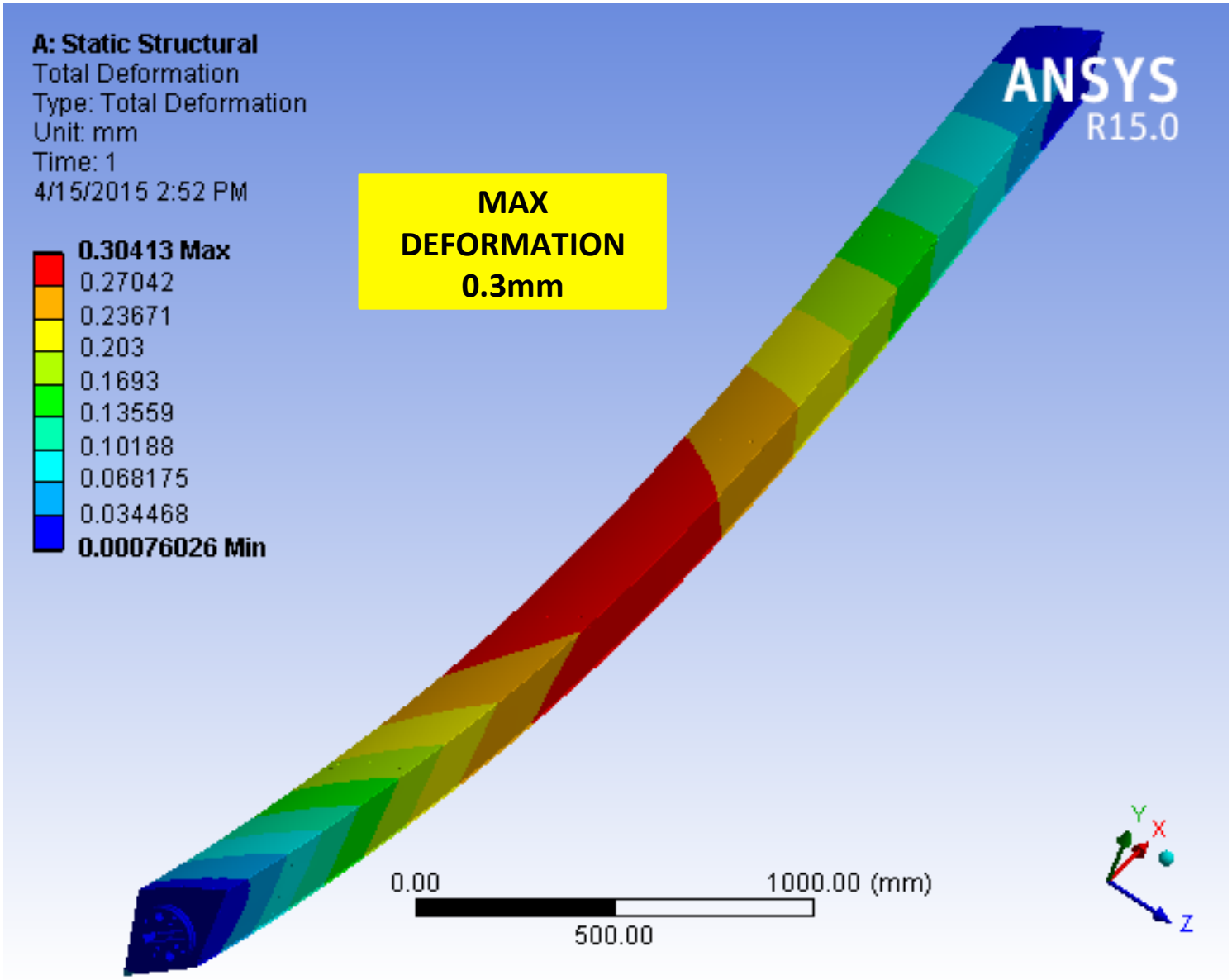

MODULE TOTAL DEFORMATION DURING LOADING

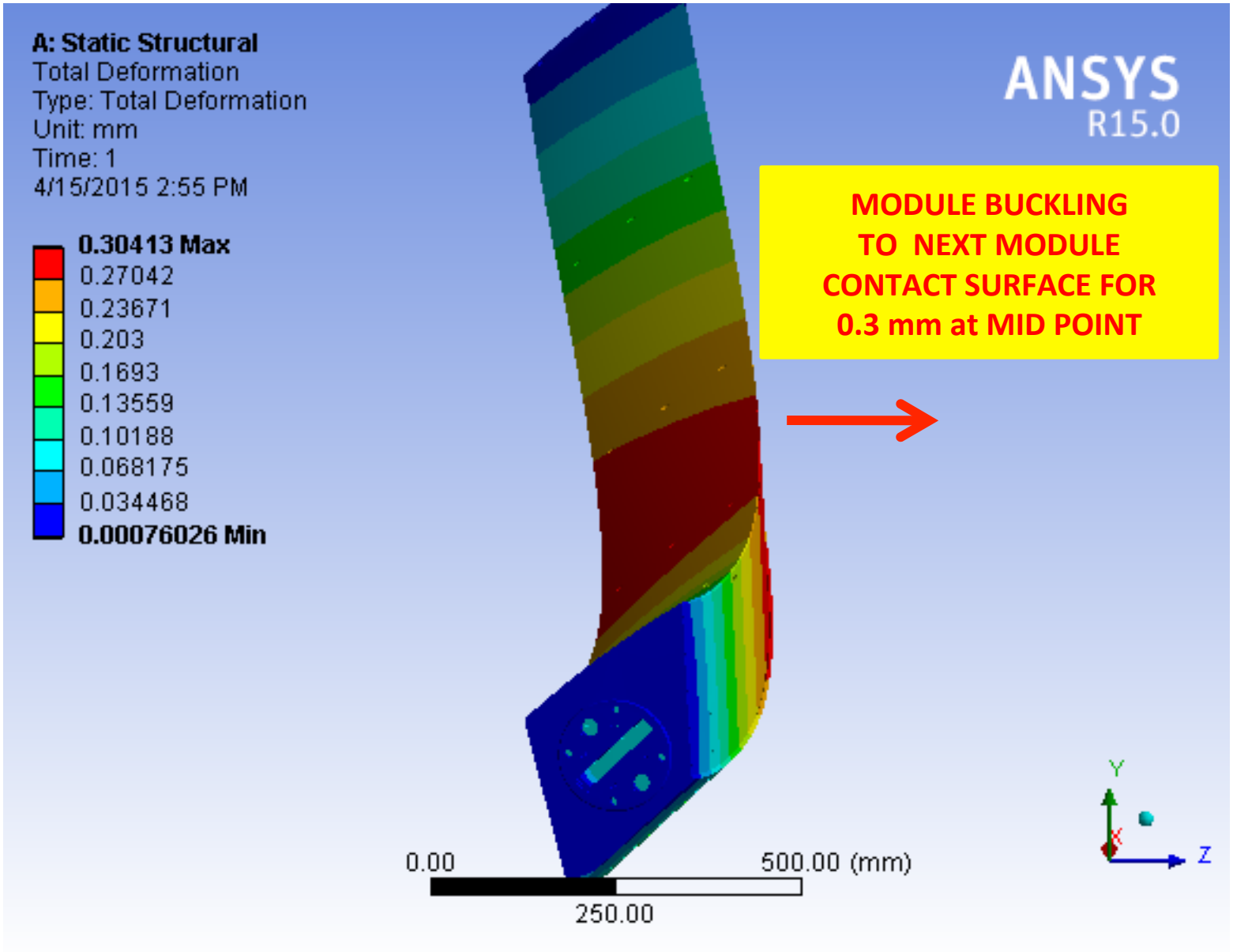

MODULE EQUIVALENT STRESS DURING LOADING

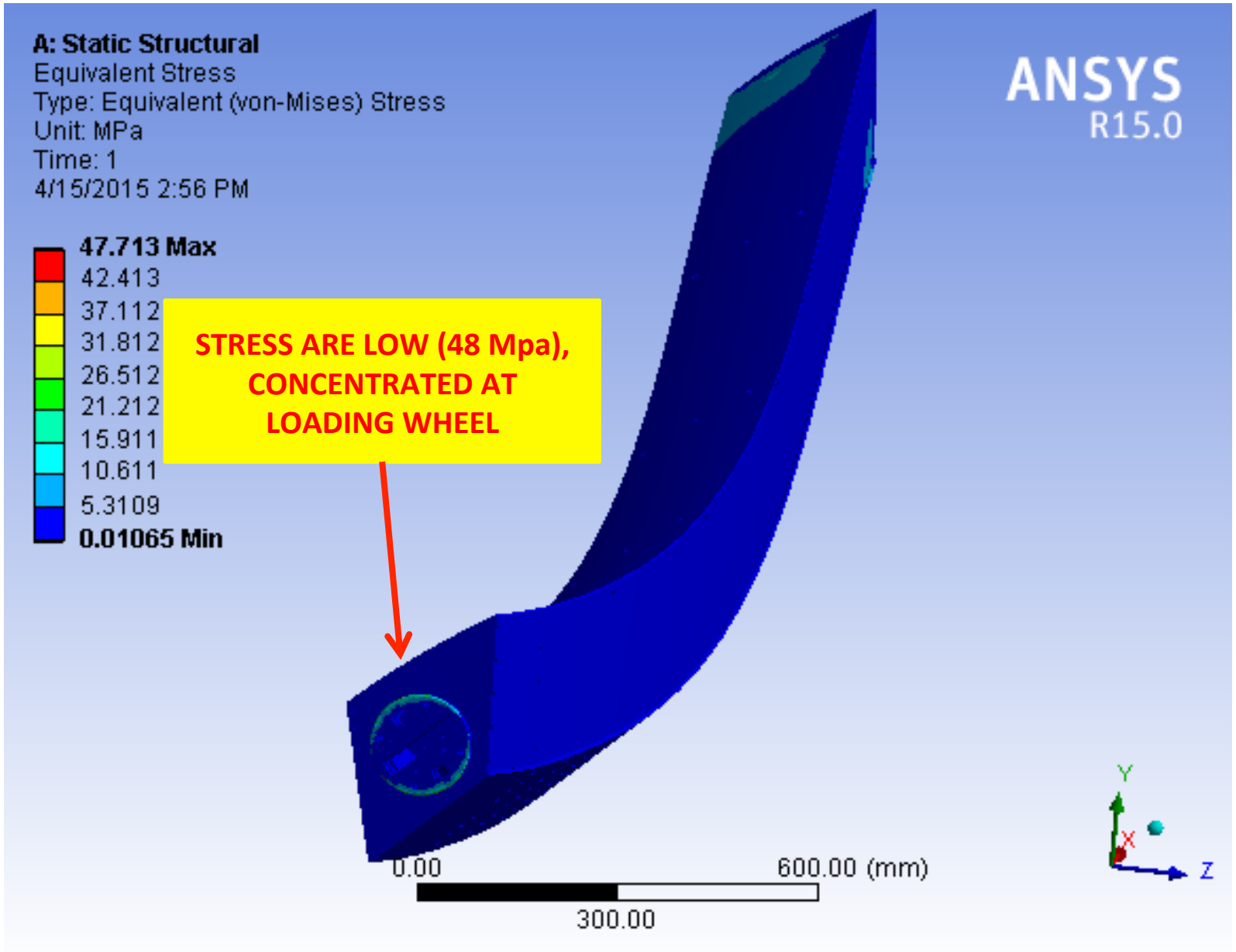

MODULE IN " VERTICAL" POSITION

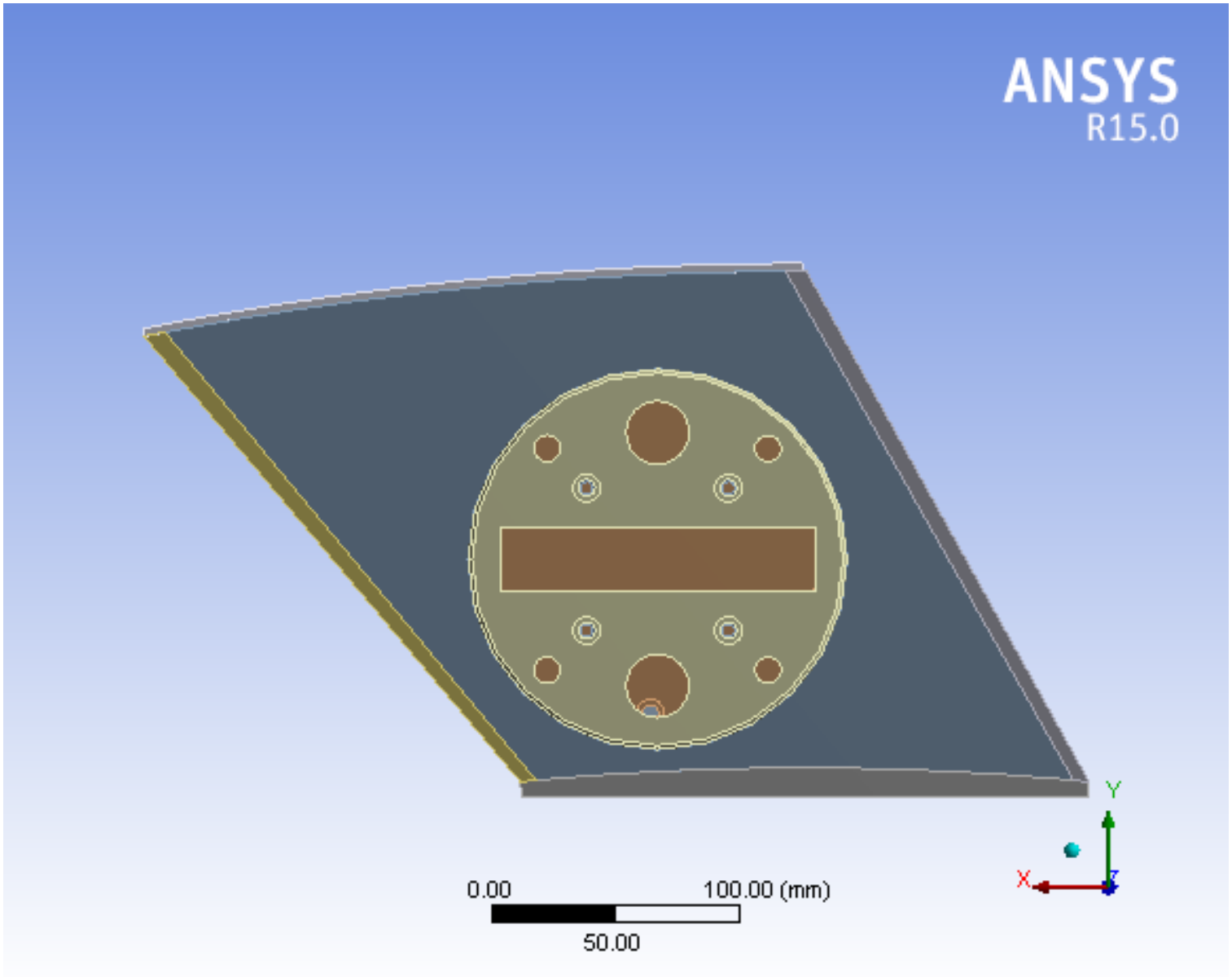

MODULE IN " VERTICAL" POSITION DEFORMATION

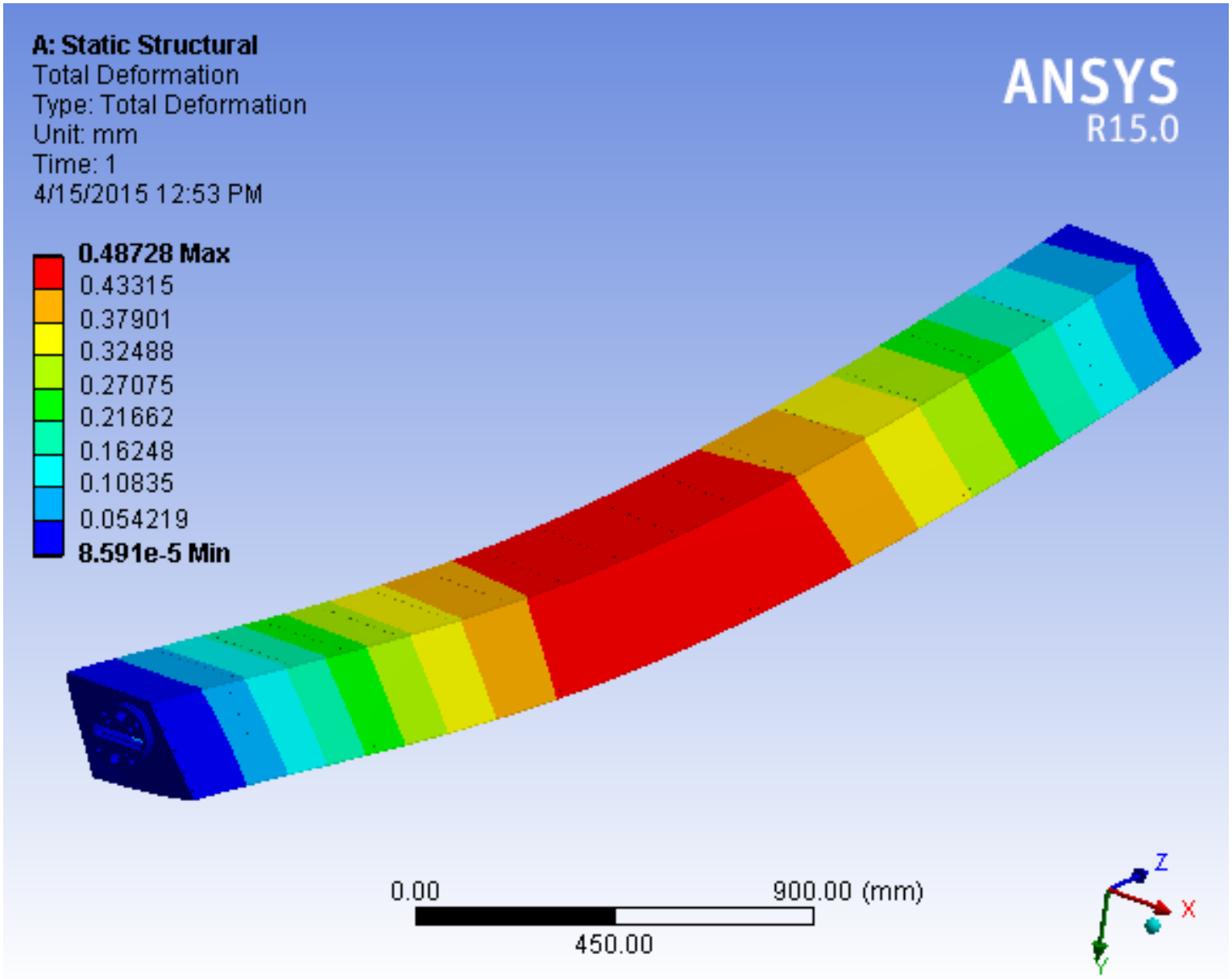

MODULE IN " VERTICAL" POSITION
DEFORMATION; EQUIVALENT STRESS

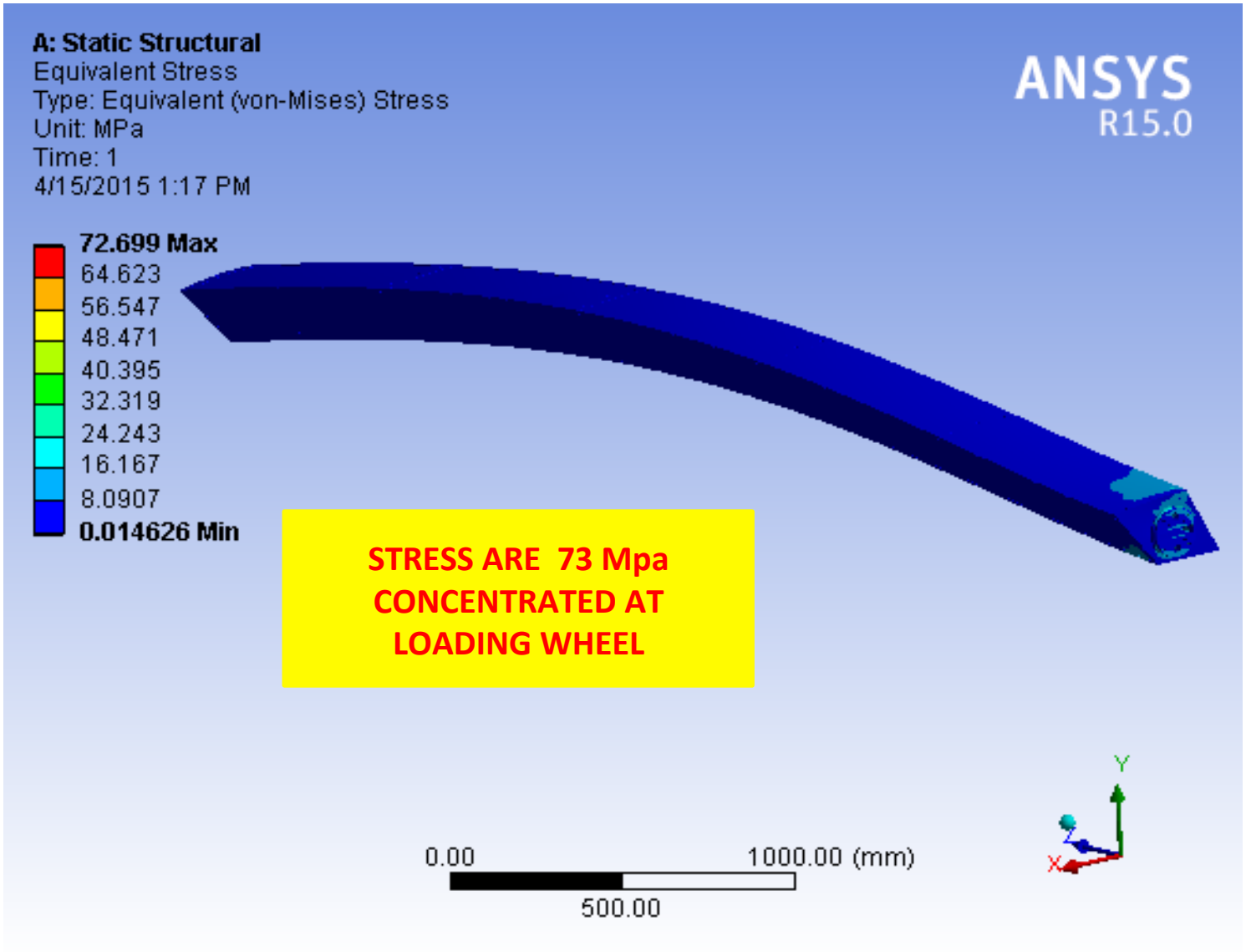
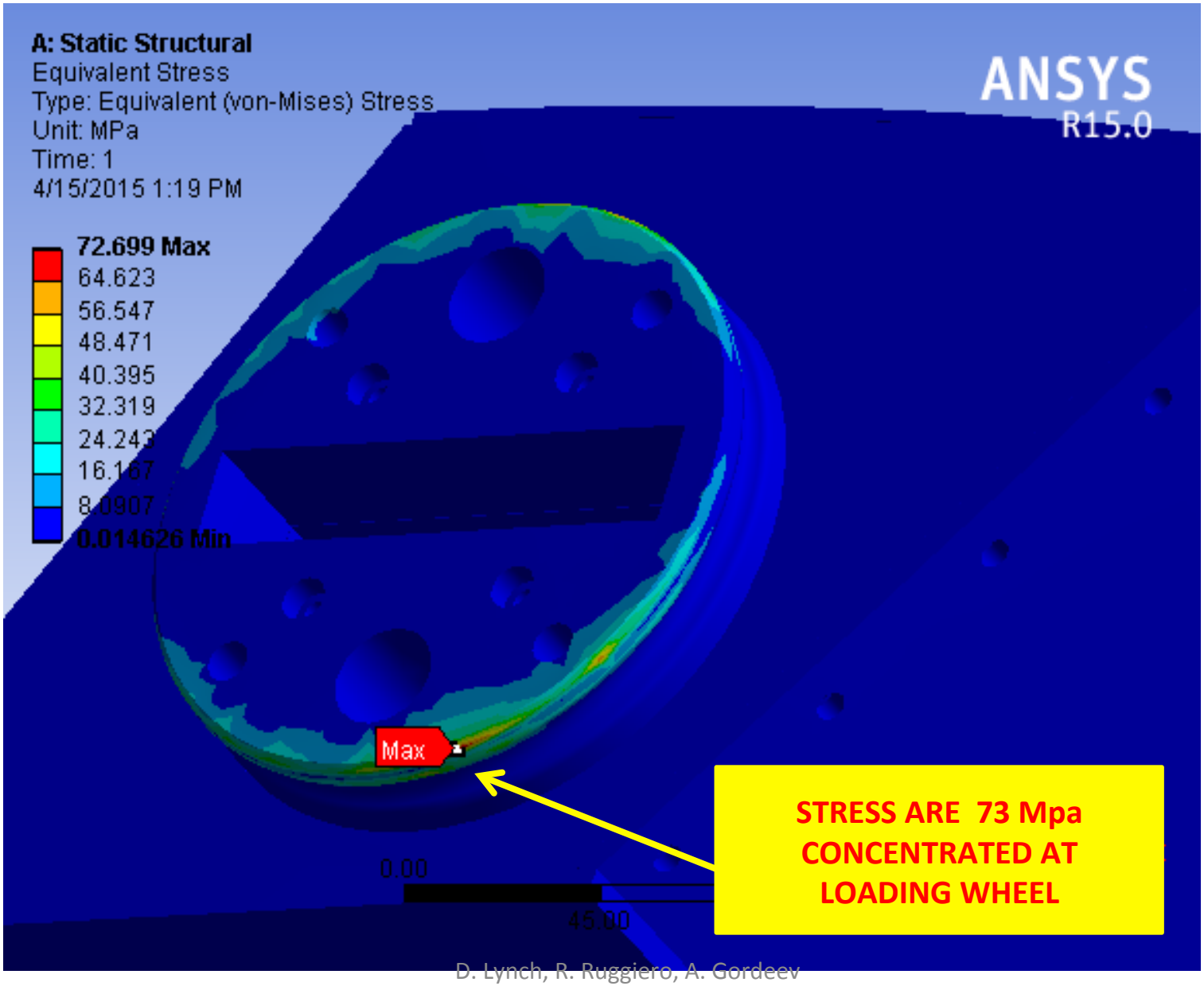
MODULE IN " VERTICAL" POSITION
DEFORMATION; EQUIVALENT STRESS