sPHENIX HADRON CALORIMETERS PRODUCTION AND ASSEMBLY

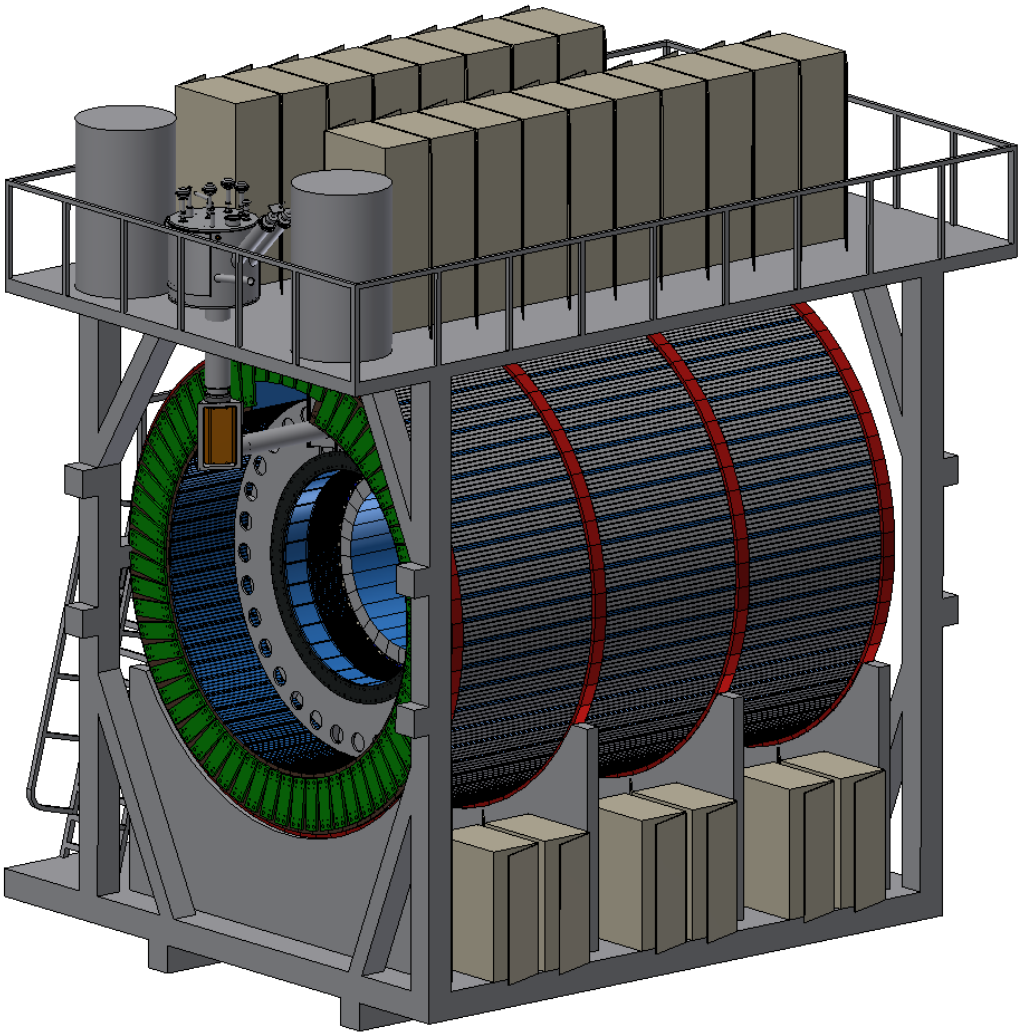

SPHENIX EXPLODED VIEW

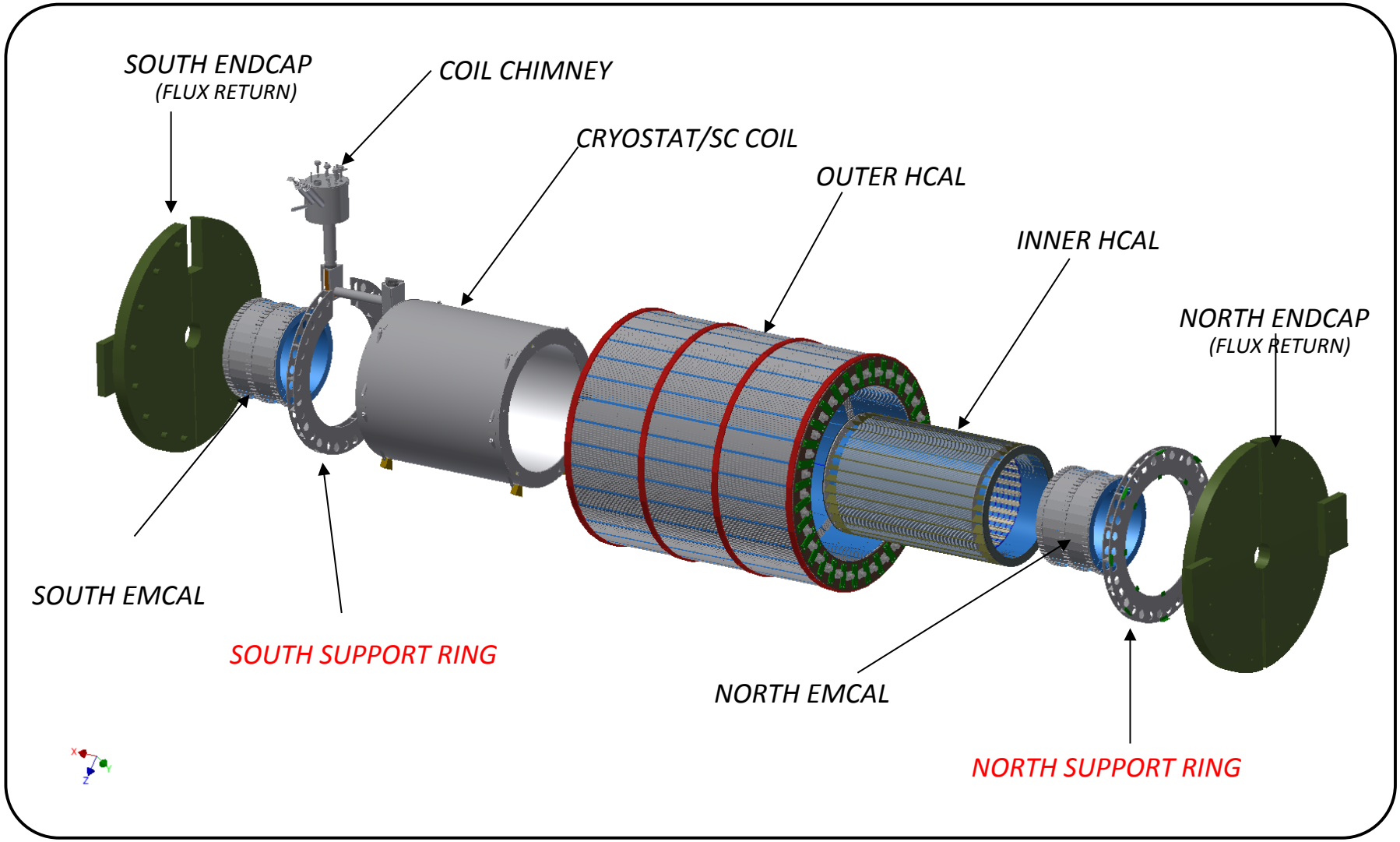

sPHENIX HADRON CALORIMETERS ASSEMBLY

OUTER HADRON CALORIMETER

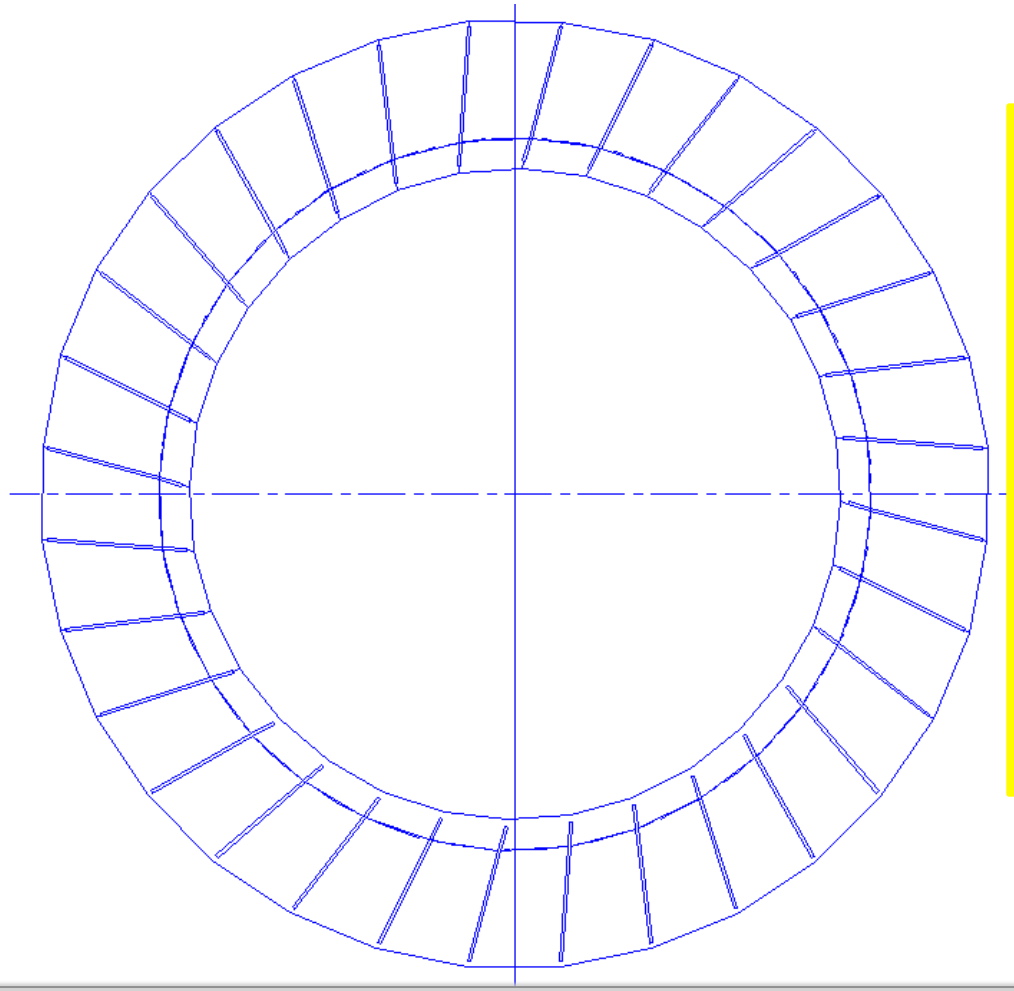

1. OUTER HADRON CALORIMETER ASSEMBLED FROM 32 SECTORS (EACH OCUPIES 11.25 DEGREE) CONNECTED TOGETHER BY SPLICE FRONT PLATES

2. AT THE BOTTOM CALORIMETER SUPPORTED BY CRADLE

xPHENIX OUTER H-cal
Sector dimensions

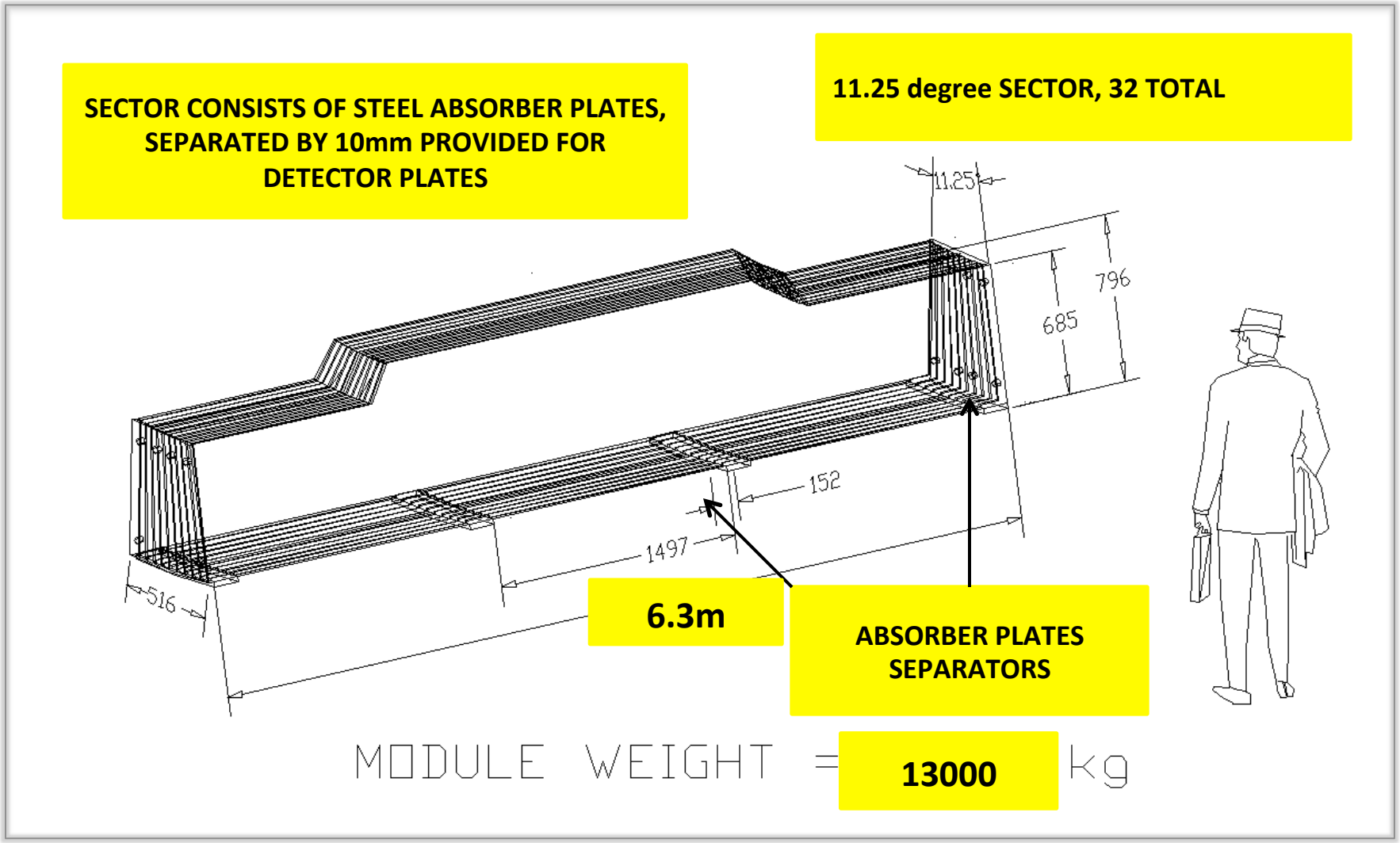

MECHANICAL TOLERANCE REQUIREMENTS

1. SECTOR LENGTH +/- 3mm;
2. GAP FOR DETECTOR PLATES +/- 0.5mm;
3. ALL OTHER MECHANICAL TOLERANCES +/- 1mm;

sPHENIX OUTER H-cal
SECTOR exploded view 2

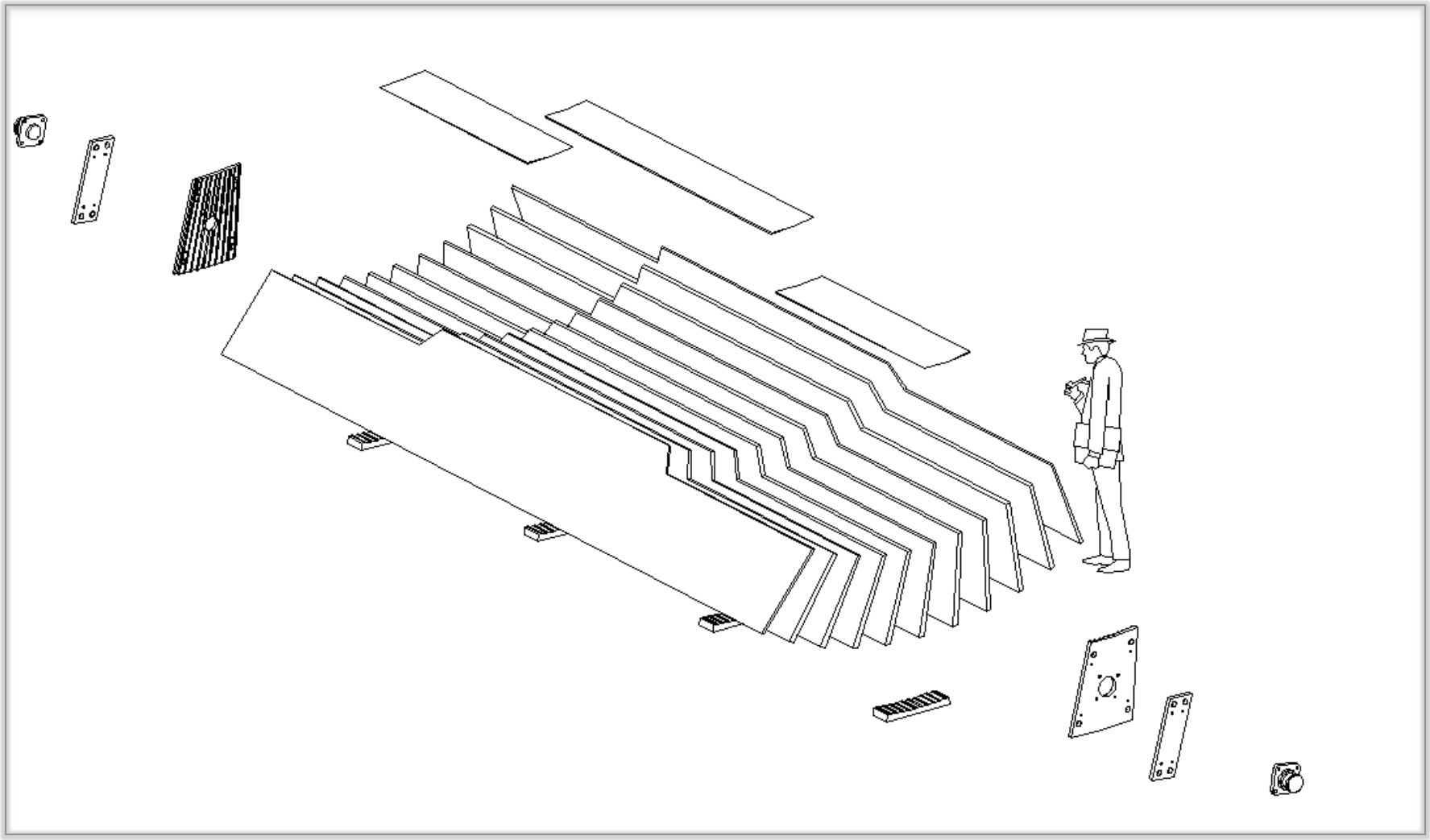

sPHENIX OUTER H-cal. 11.25 degree module

SECTOR LIFTING ANALYSES. SECTOR IN HORIZONTAL POSITION. DEFORMATION

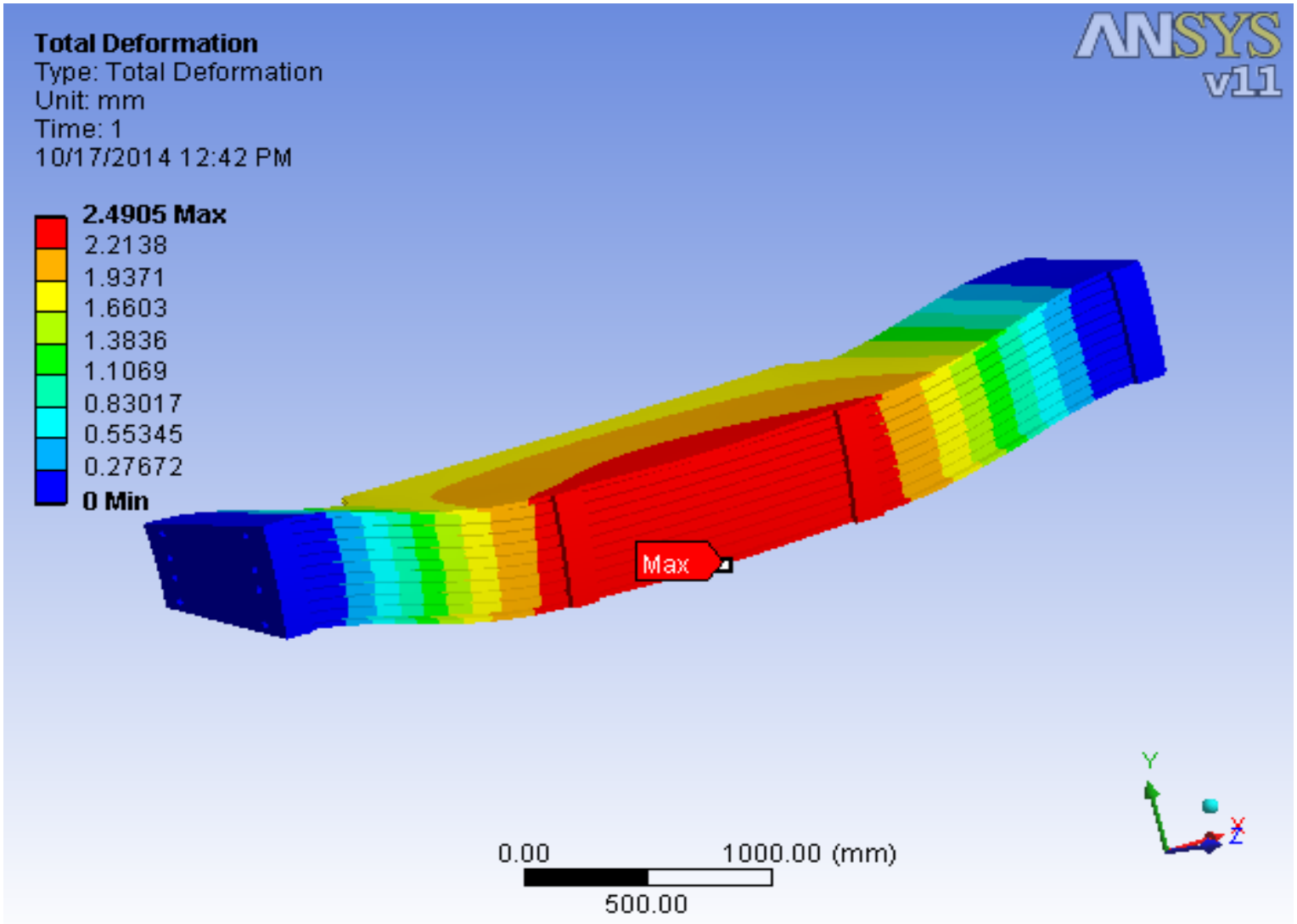

1ST HCAL SECTOR INSTALLATION

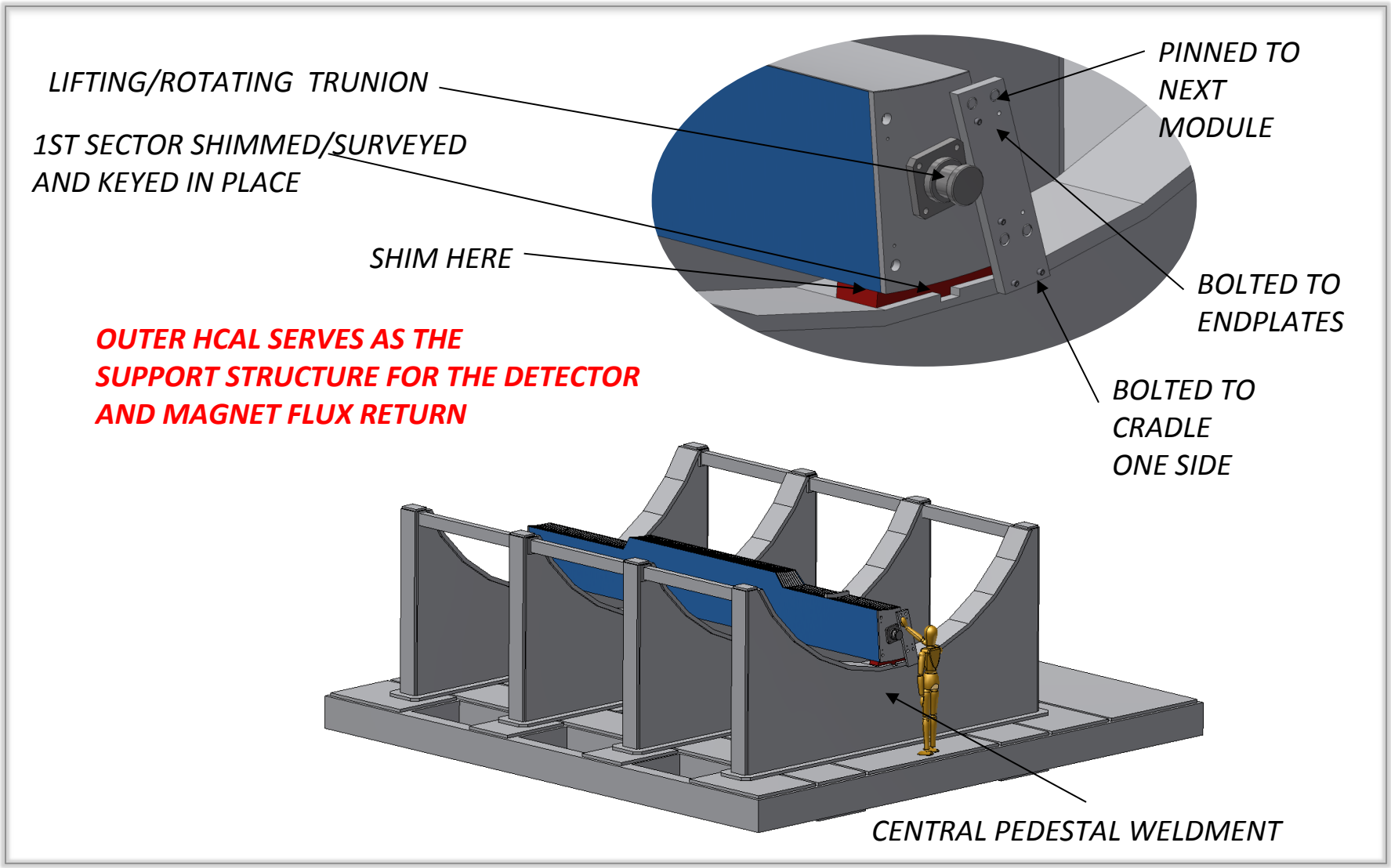

~180 deg OUTER HCAL ASSEMBLED

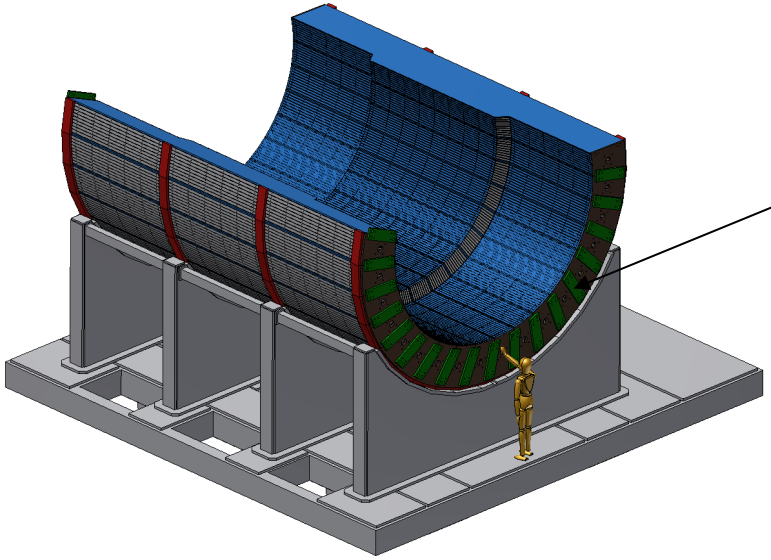

120 DEGREE OR MORE
BOTTOM SUPPORT
WILL BE SUFFICIENT

TOTAL DEFORMATION IS 0.4mm
MAX

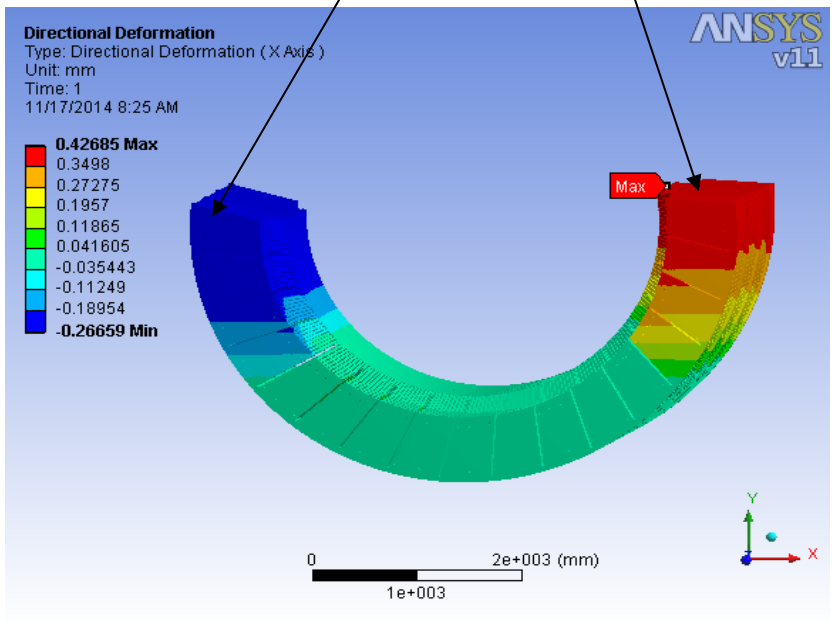

AFTER 180 DEGREE OF
OUTER H-CAL ASSEMBLED
MAGNET LOADED AND
RESTRANED

ASSEMBLY DEFORMATION

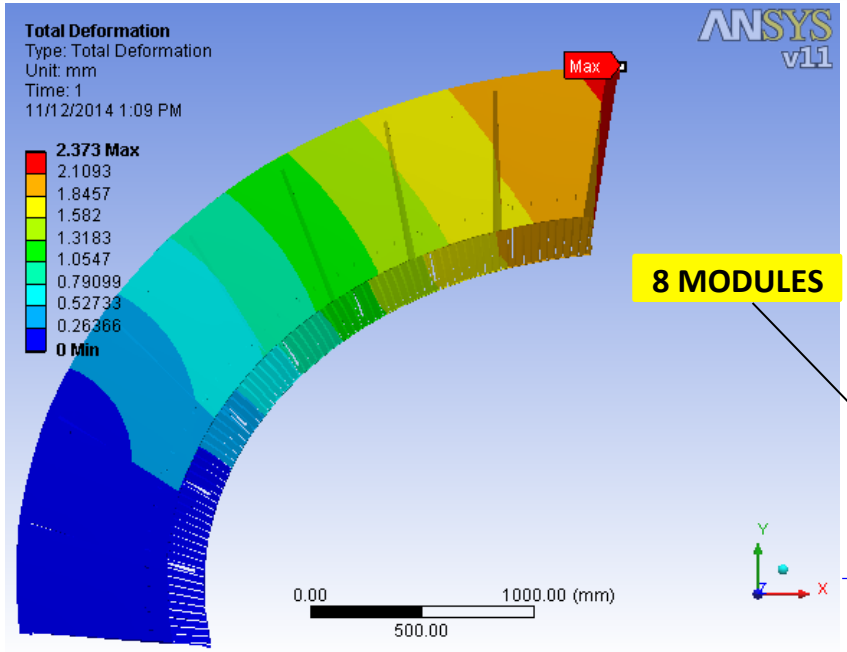

2.3mm DEFORMATION

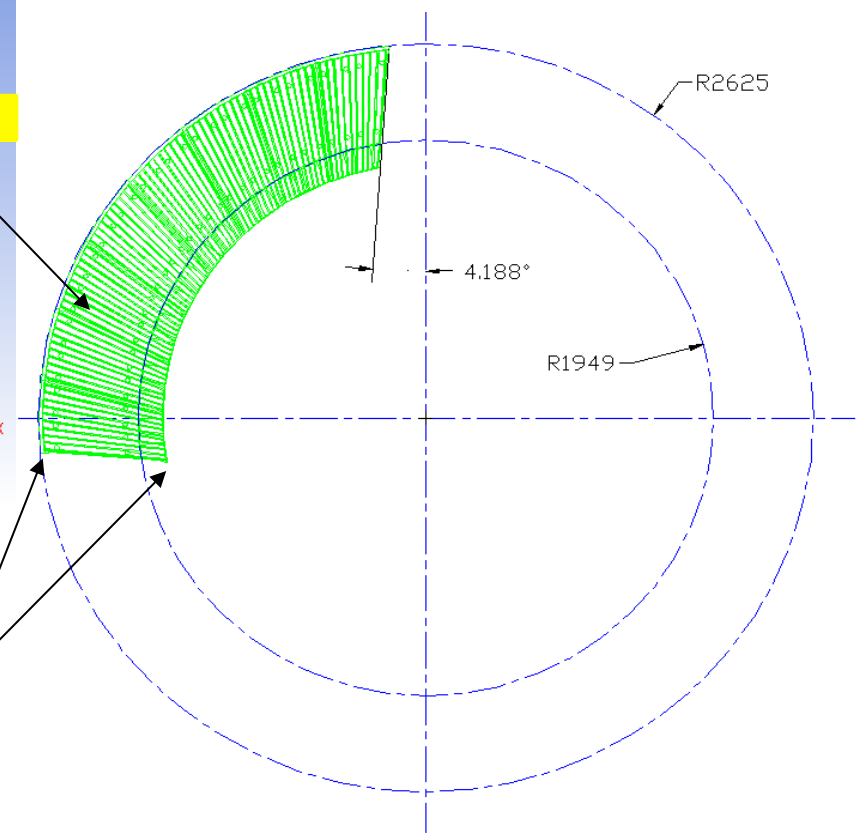

8 MODULES

FIXED SUPPORTS

DEFORMATION IS TOO GREAT FOR INSTALLATION OF REMAINING MODULES

ASSEMBLY DEFORMATION

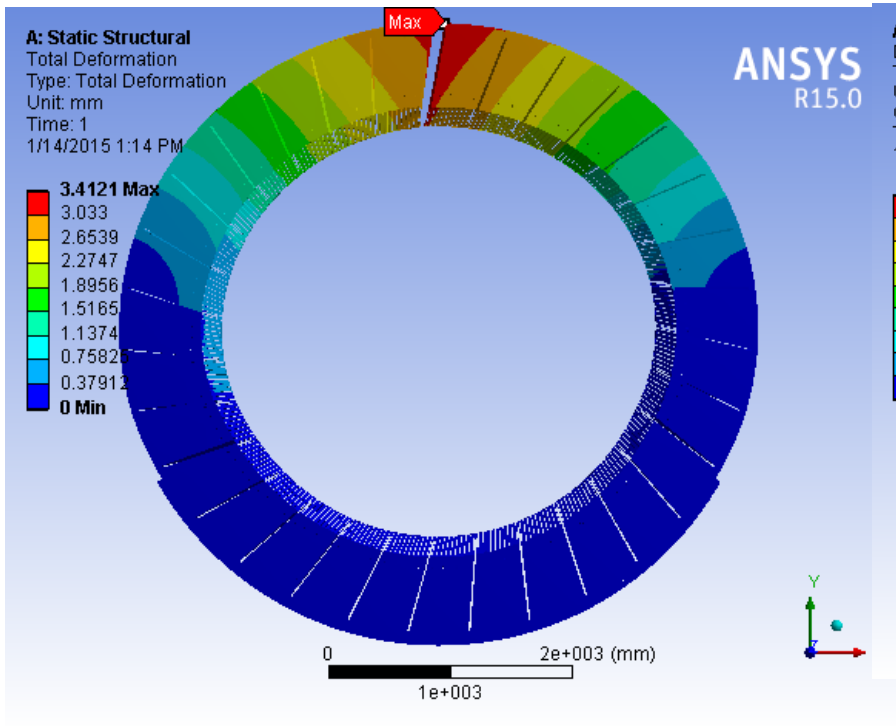

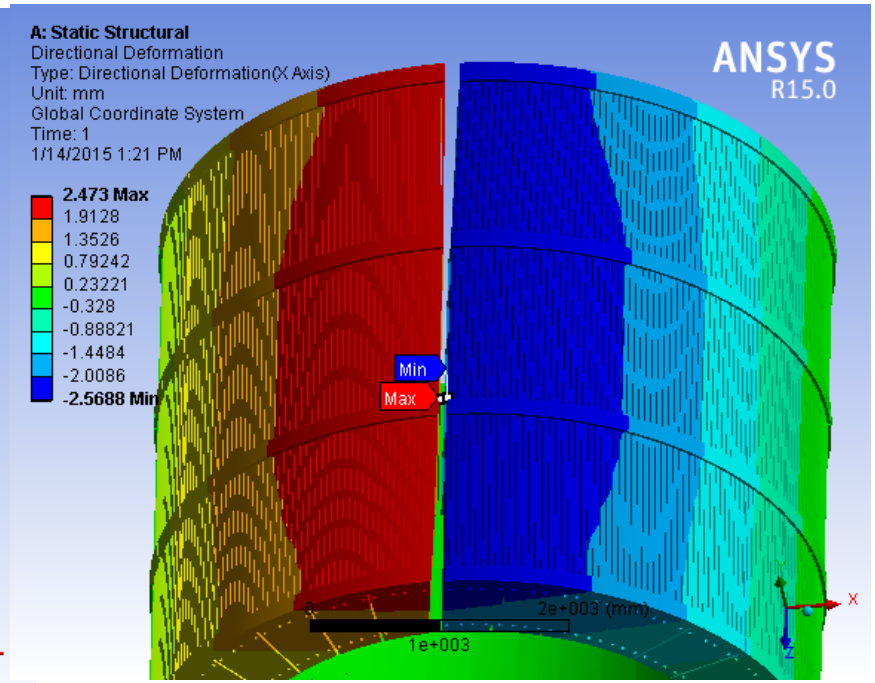

AN EXTERNAL SUPPORT IS REQUIRED
FOR REMAINING SECTORS TO BE INSTALLED

TEMPORARY SUPPORT FOR TOP SECTOR INSTALLATION

FRAME SUPPORT DEFORMATION IS ONLY 0.02mm

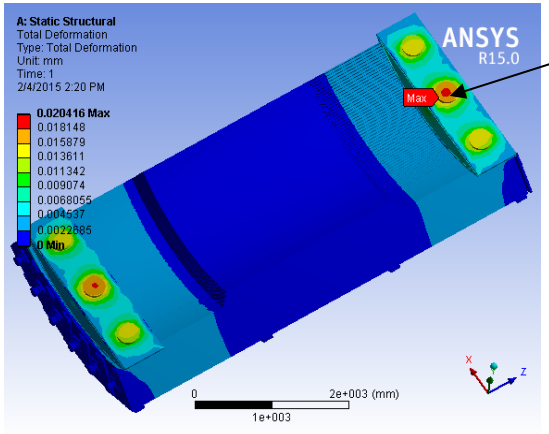

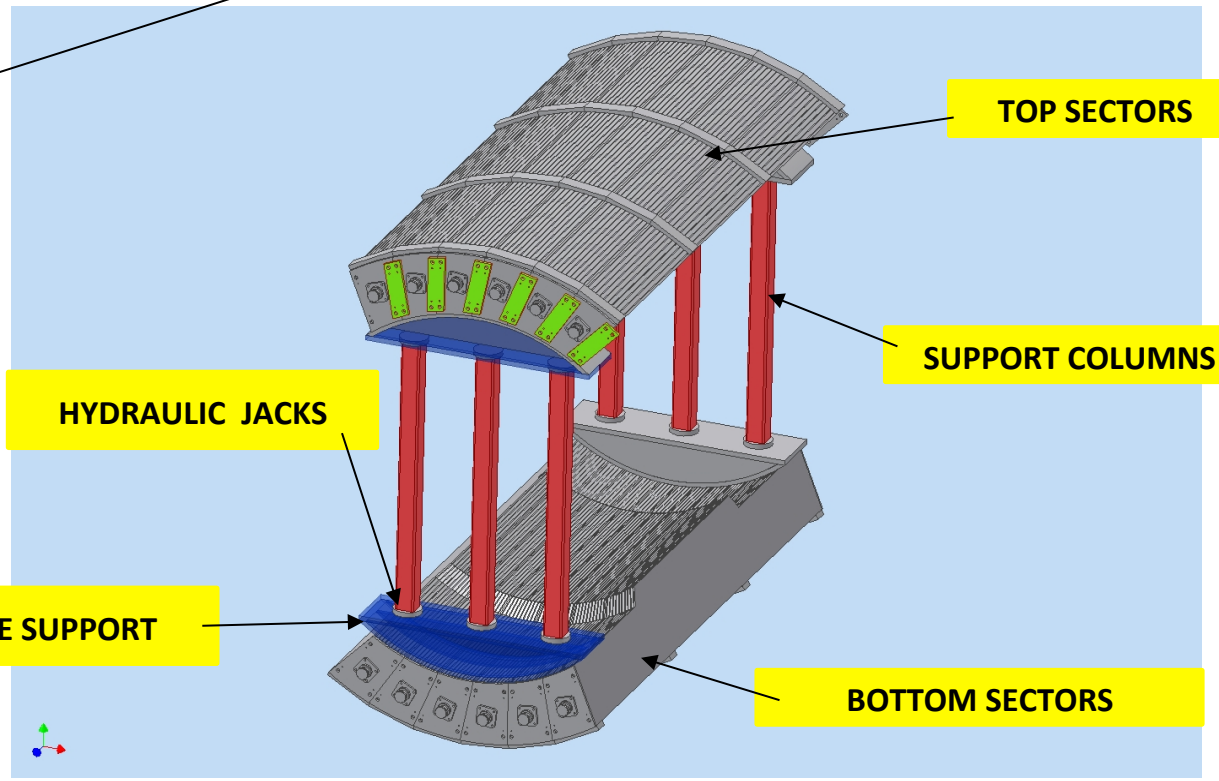

DEFORMATION DOES NOT EFFECT LOWER HCAL SECTORS INTERNAL STRUCTURE

COMPLETED ASSEMBLY ANALYSYS

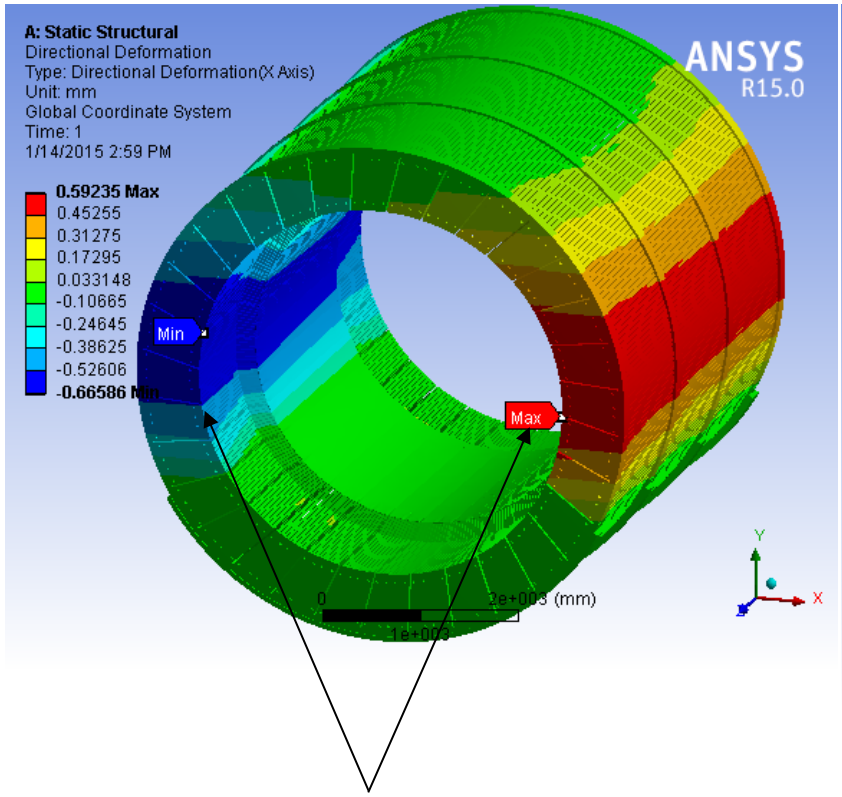

X DEFORMATION +/- 0.6mm

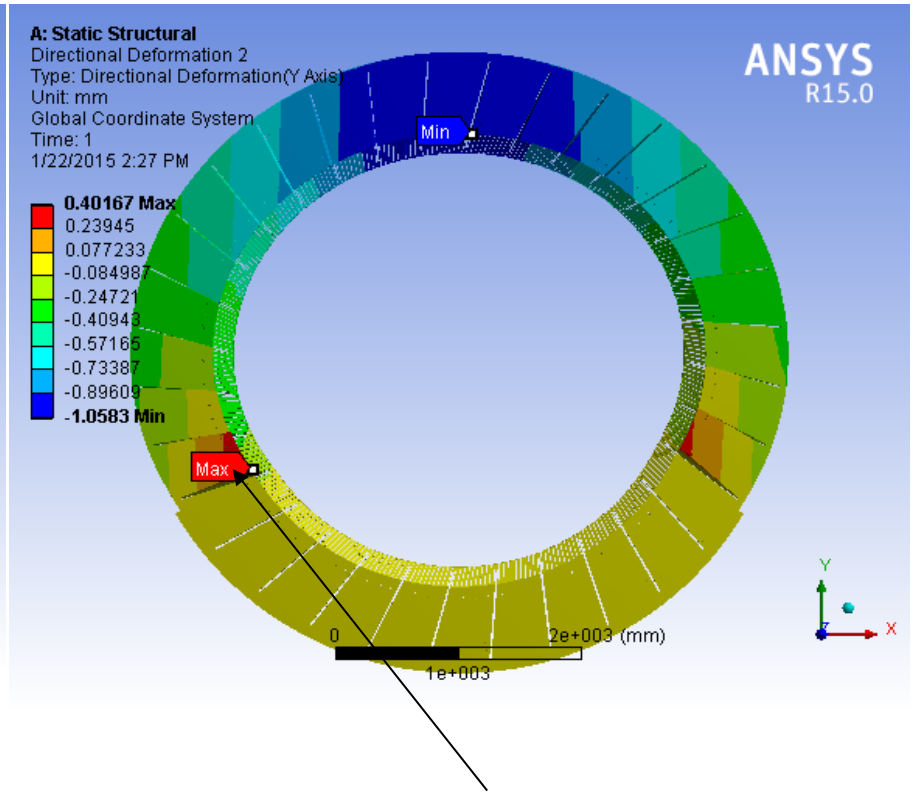

Y DEFORMATION 1mm MAX

FINAL ASSEMBLY DEFORMATION IS WITHIN TOLERANCE

INNER HCAL SECTOR

COMPLETED MODULE

4.3m LG
1 TON

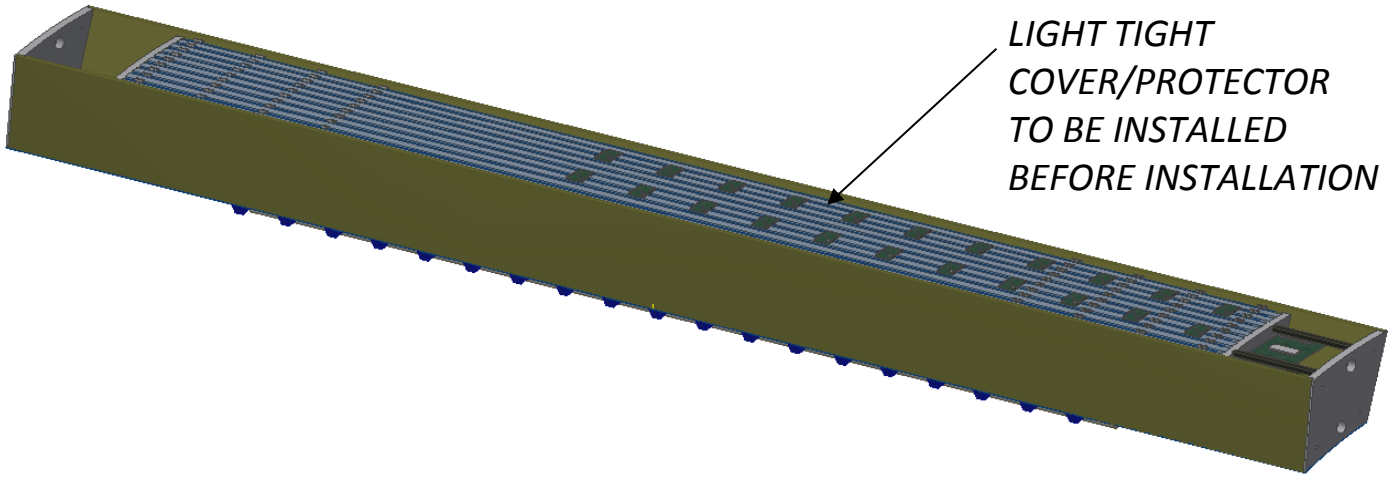

GRAVITY IN -Z DIRECTION (horizontal position) DEFORMATION

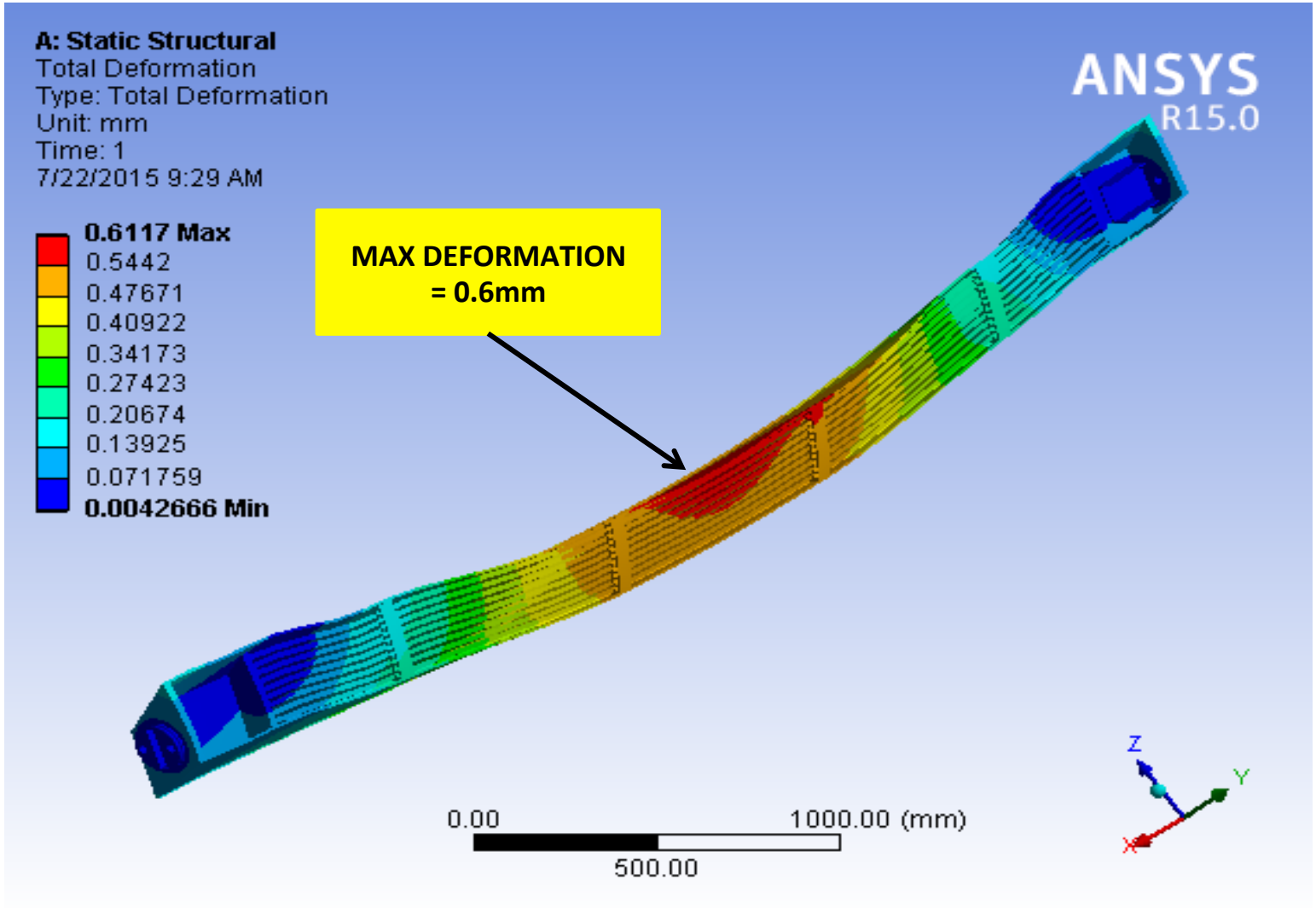

HCAL OVERVIEW

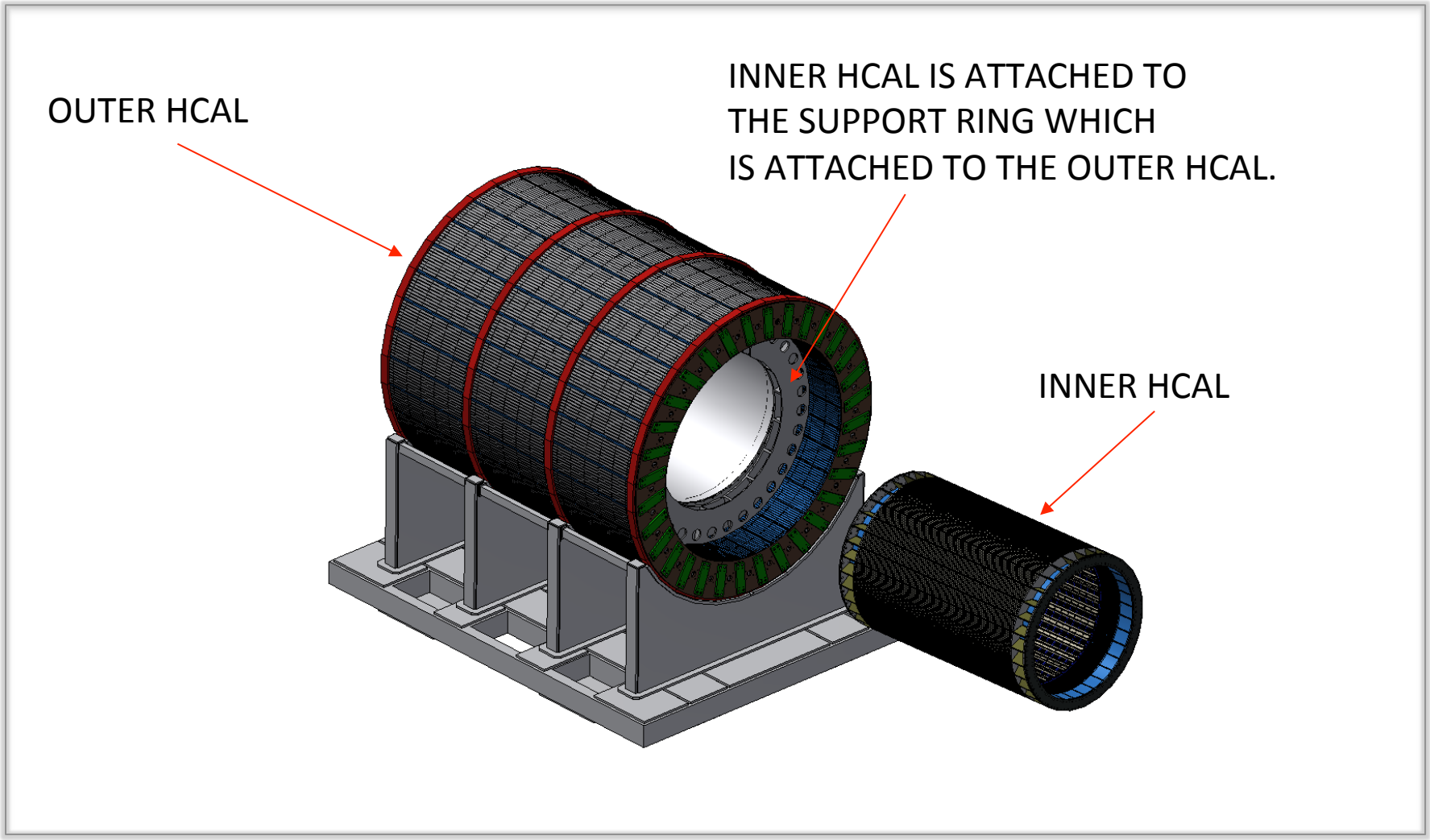

INNER HCAL INSTALLATION

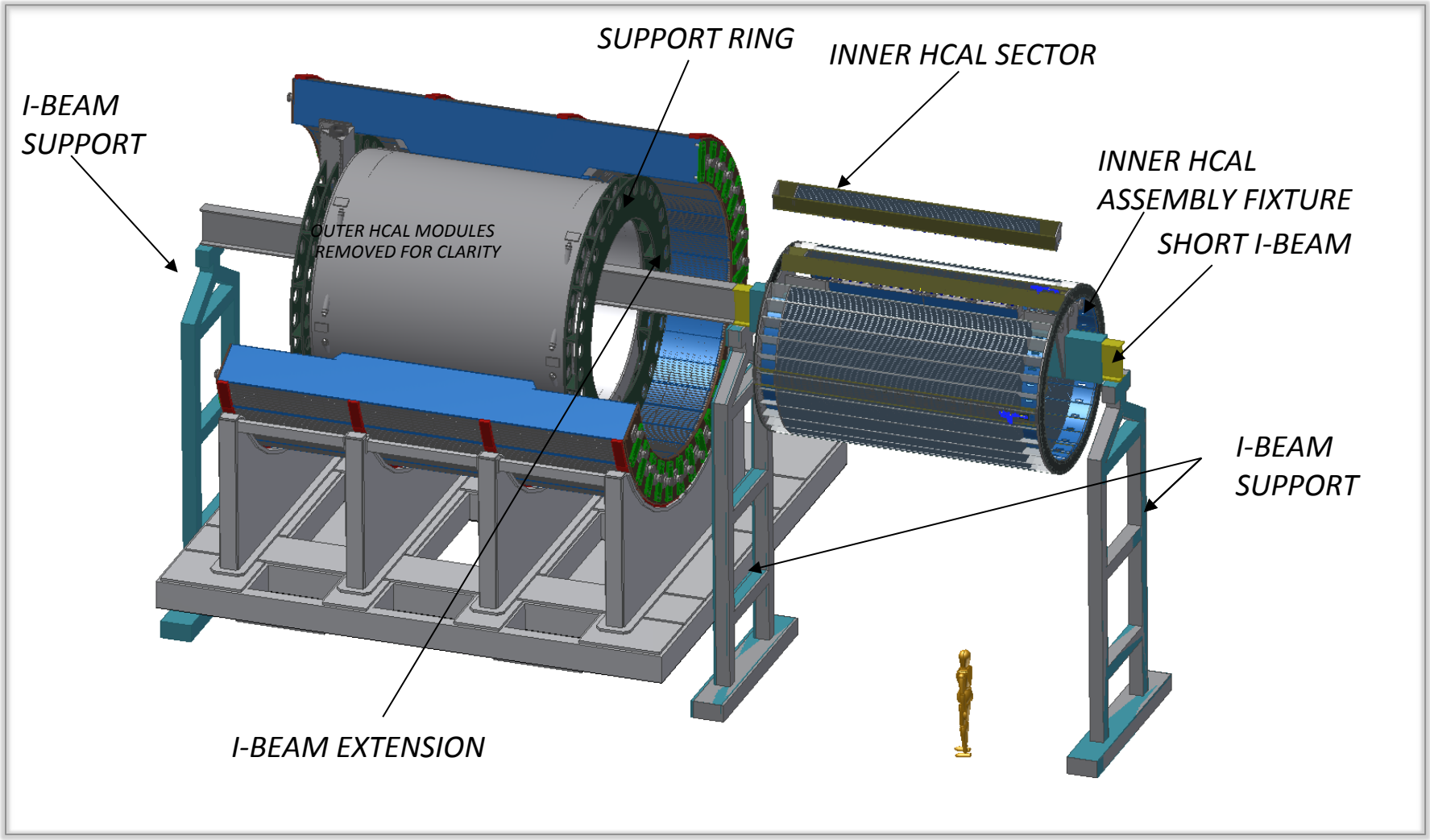

INTERNAL H-cal SECTOR INSTALLATION SUPPORT STRUCTURE

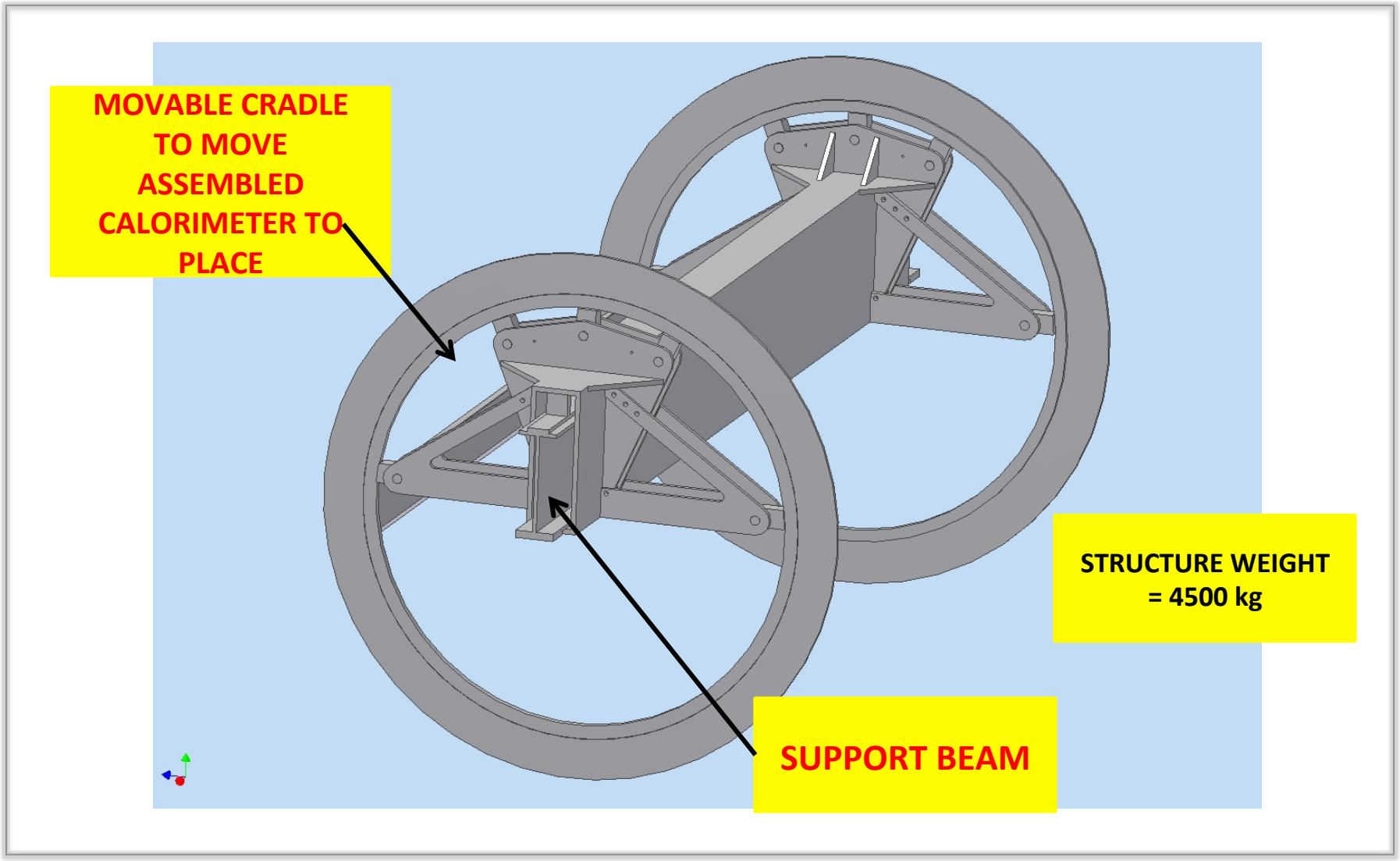

INTERNAL HCal SECTOR INSTALLATION
16 SECTORS INSTALLED. ISO VIEW

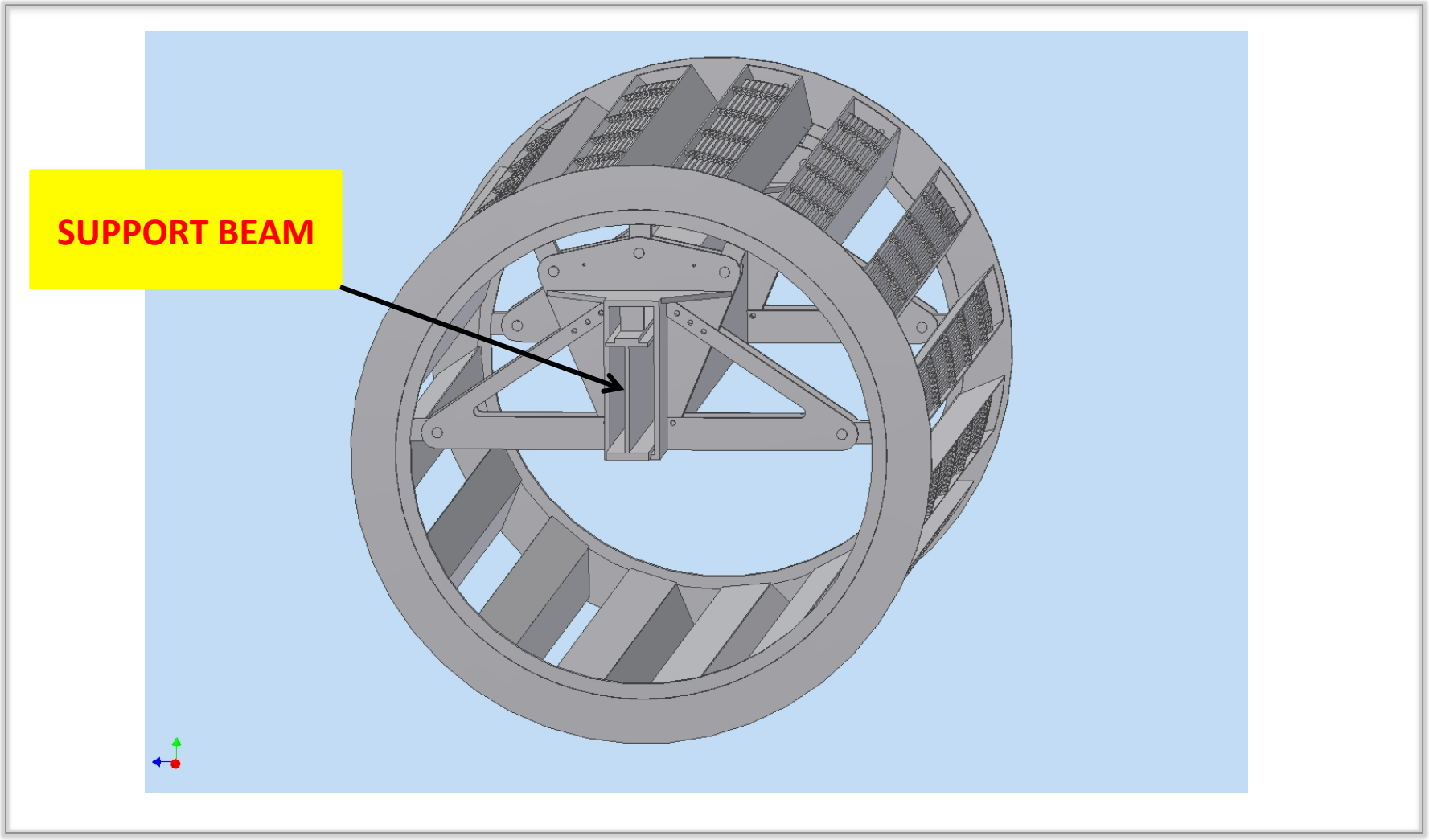

sPHENIX INNER H-CAL
ASSEMBLY AND INSTALLATION

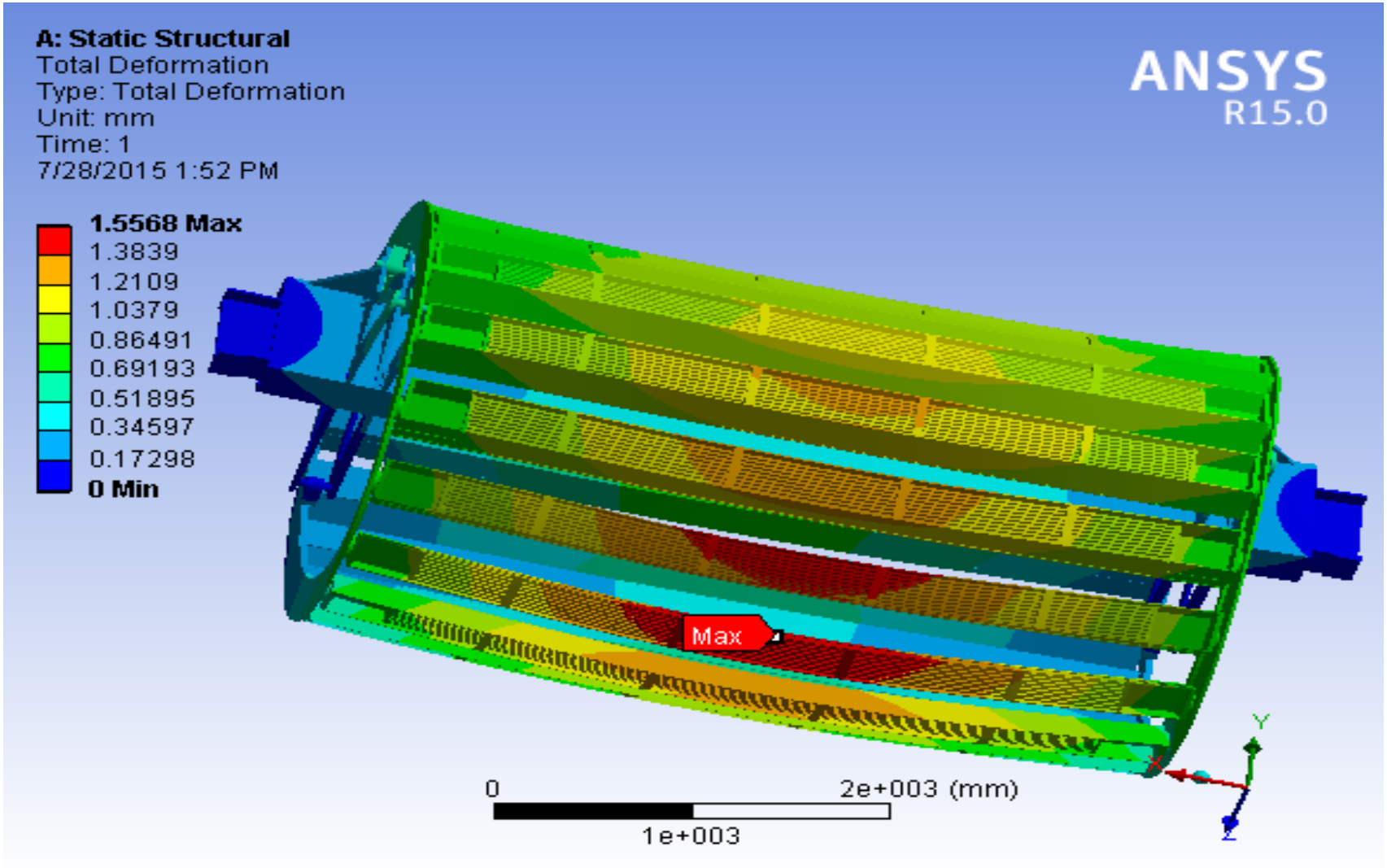

BACKUP SLIDES

OUTER HCAL GEOMETRY

32 MODULES

INNER RADIUS 1.9m
OUTER RADIUS 2.6m

10 ROWS of 7mm Scint Tiles
22 Tiles in each row.

~26.1mm - ~42.4mm
Tapered 1006 Steel Plates

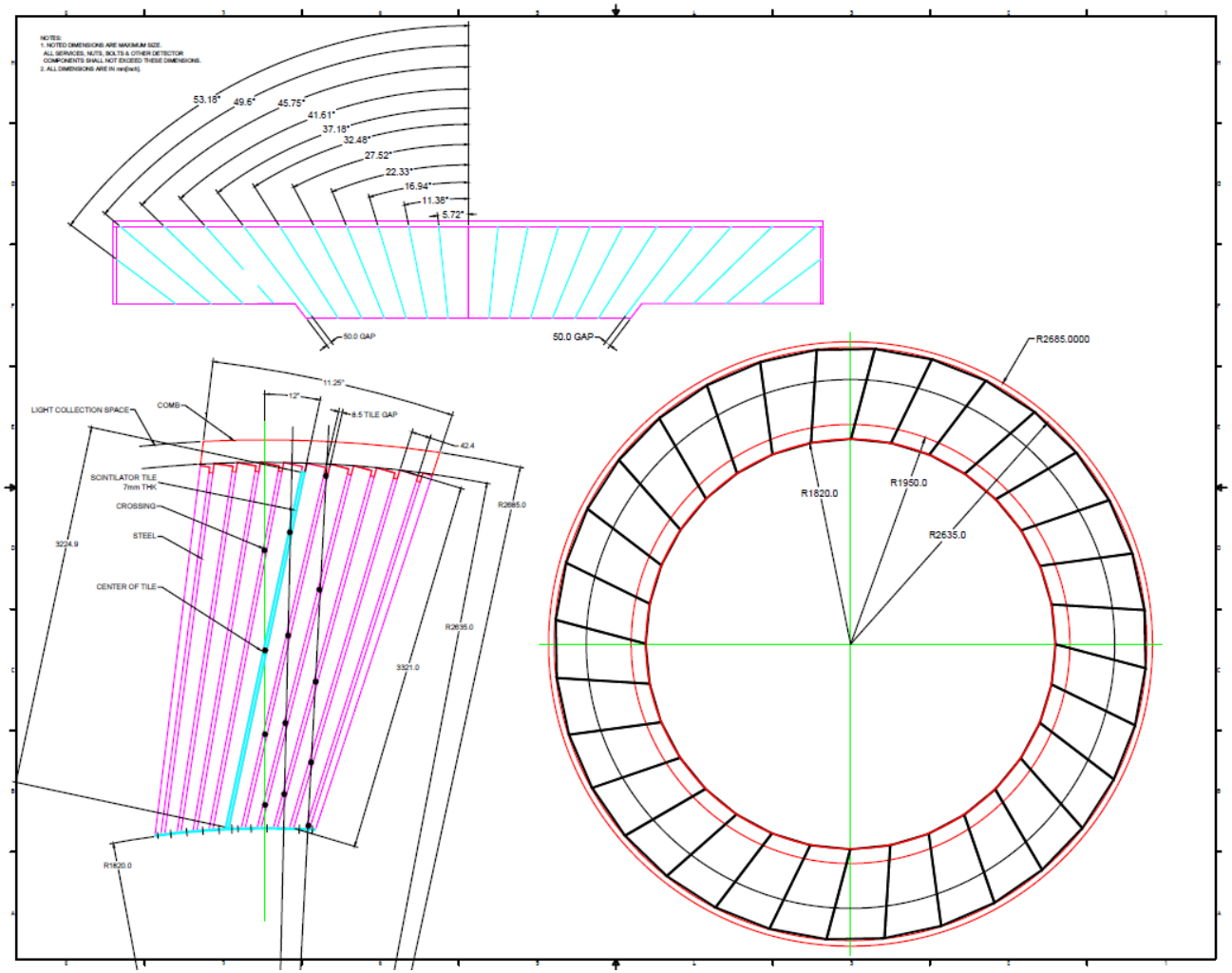

INNER HCAL GEOMETRY

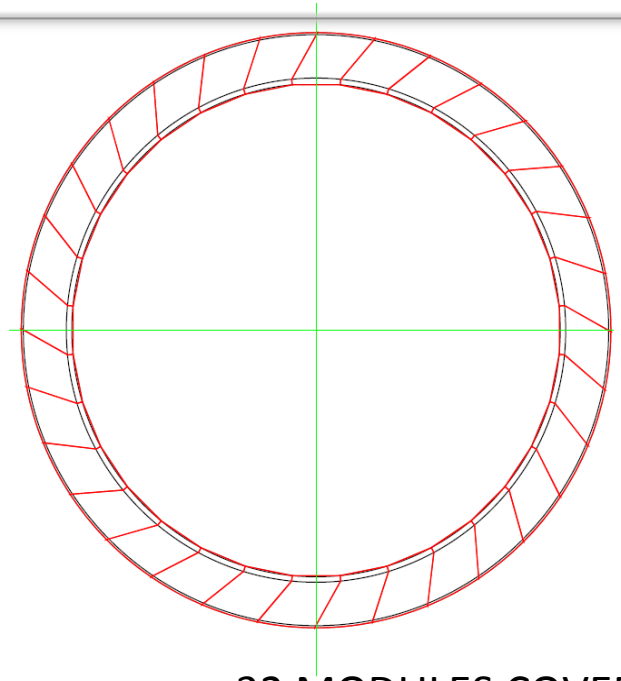

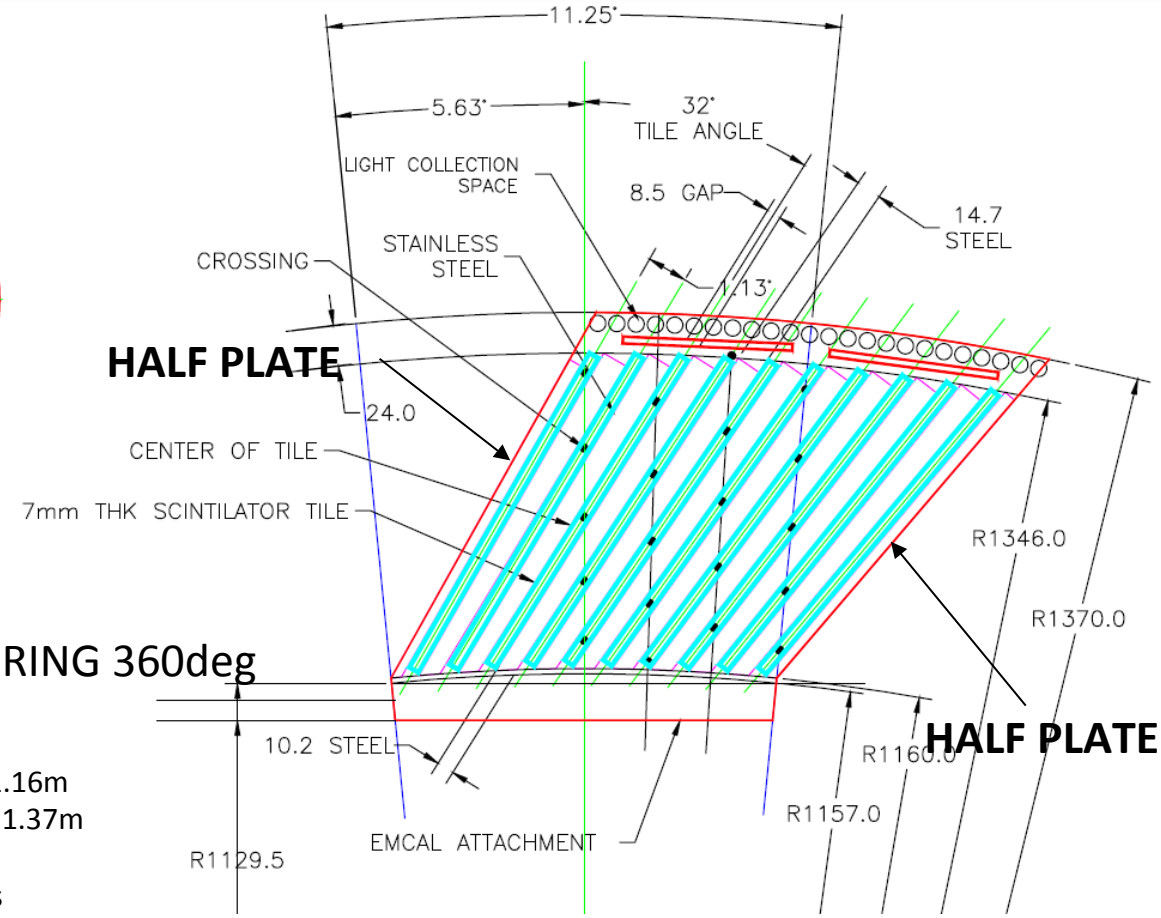

32 MODULES COVERING 360deg

INNER RADIUS ENVELOPE -1.16m
OUTER RADIUS ENVELOPE - 1.37m

10 ROWS of 7mm Scint Tiles
22 Tiles in each row.
32deg Tilt Angle
~10.2mm – ~14.7mm Tapered SST 304 Plates

NOTES:

1. NOTED DIMENSIONS ARE MAXIMUM SIZE.
   ALL SERVICES, NUTS, BOLTS & OTHER DETECTOR
   COMPONENTS SHALL NOT EXCEED THESE DIMENSIONS.
2. **ALL DIMENSIONS ARE IN mm[inch].**

SPHENIX ENVELOPE CONTROL DRAWING HCAL DIMENSIONS

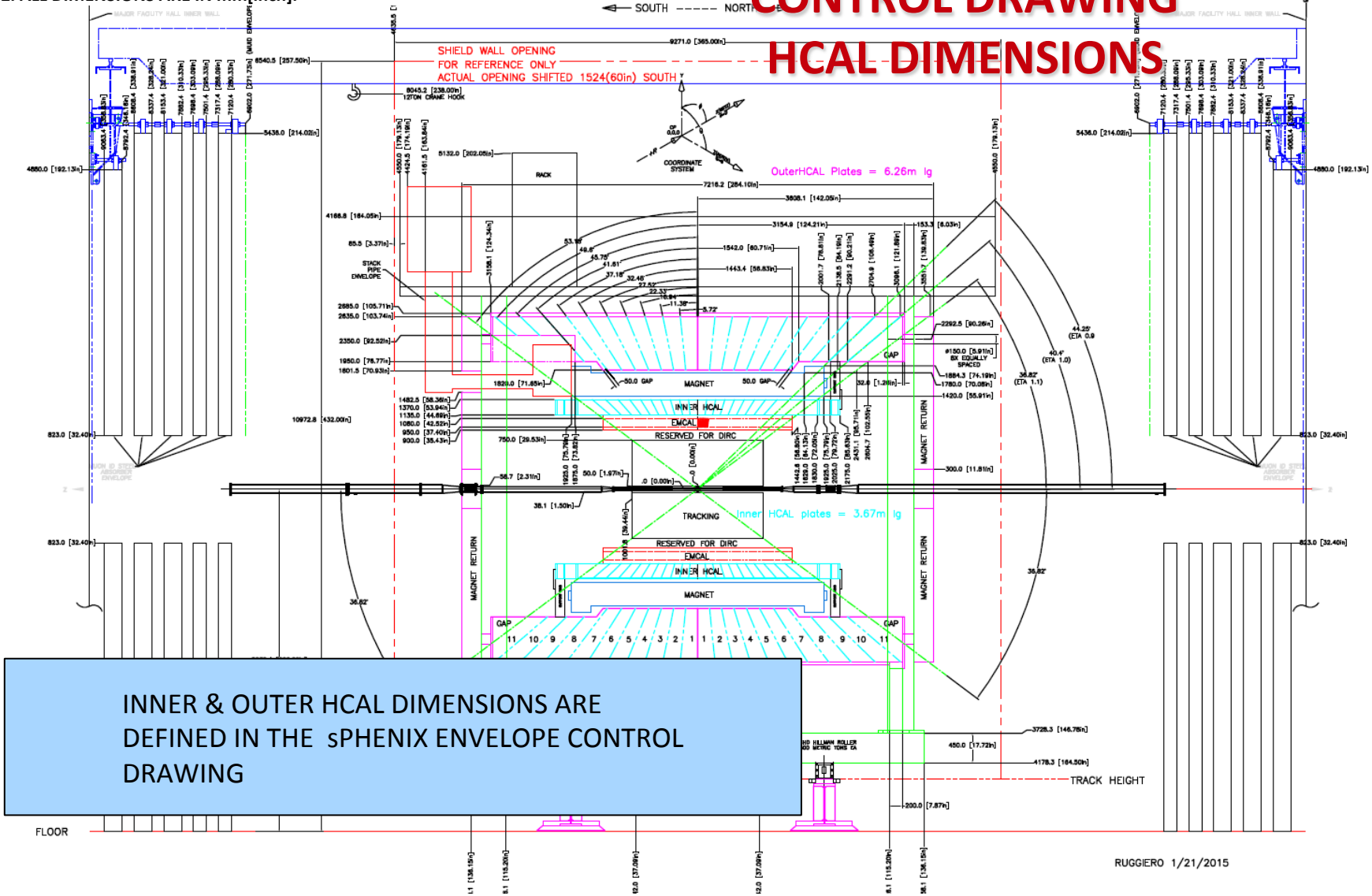

INNER & OUTER HCAL DIMENSIONS ARE DEFINED IN THE sPHENIX ENVELOPE CONTROL DRAWING