How the calibration was done for the 1st HCal prototype? [From software point of view]

Edward Kistenev, Liang Xue and Xiaochun He

Detailed are documented in a technical note 471

Technical Report of the sPHENIX Hadronic Calorimeter Prototype Simulation Study and the Beam Test Data Analysis

L. Xue[c], C. Aidala[e], S. Beckman[b], C. Biggs[a], S. Boose[a], M. Chiu[a], A. Franz[a], Y. Goto[g], J. Haggerty[a], X. He[c], K. Jones[a], E. Kistenev[a], B. Lenz[a], M. Lenz[a], D. Lynch[a], E. Mannel[a], M. McCumber[d], D. Morrison[a], J. Nagle[b], E. Obrien[a], C. Pinkenburg[a], S. Polizzo[a], B. Ramson[e], J. Rubin[e], R. Ruggeiro[a], A. Sickles[a], P. Stankus[a], S. Stoll[a], A. Sukhanov[a], F. Toldo[a], C. Woody[a]

About 70 pages long

Many people were involved

A few pictures

From engineering drawings to Geant4 detector construction

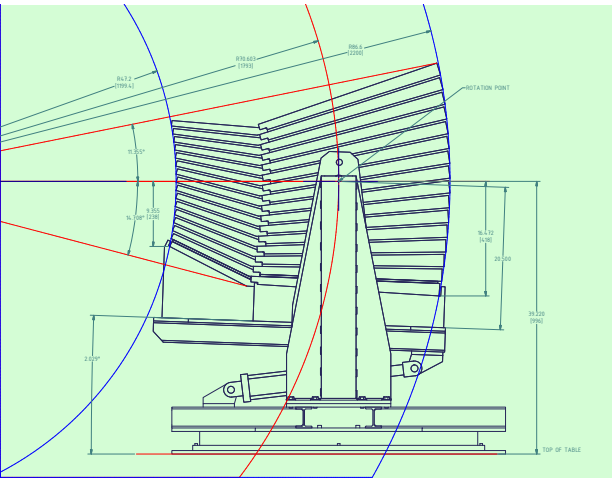

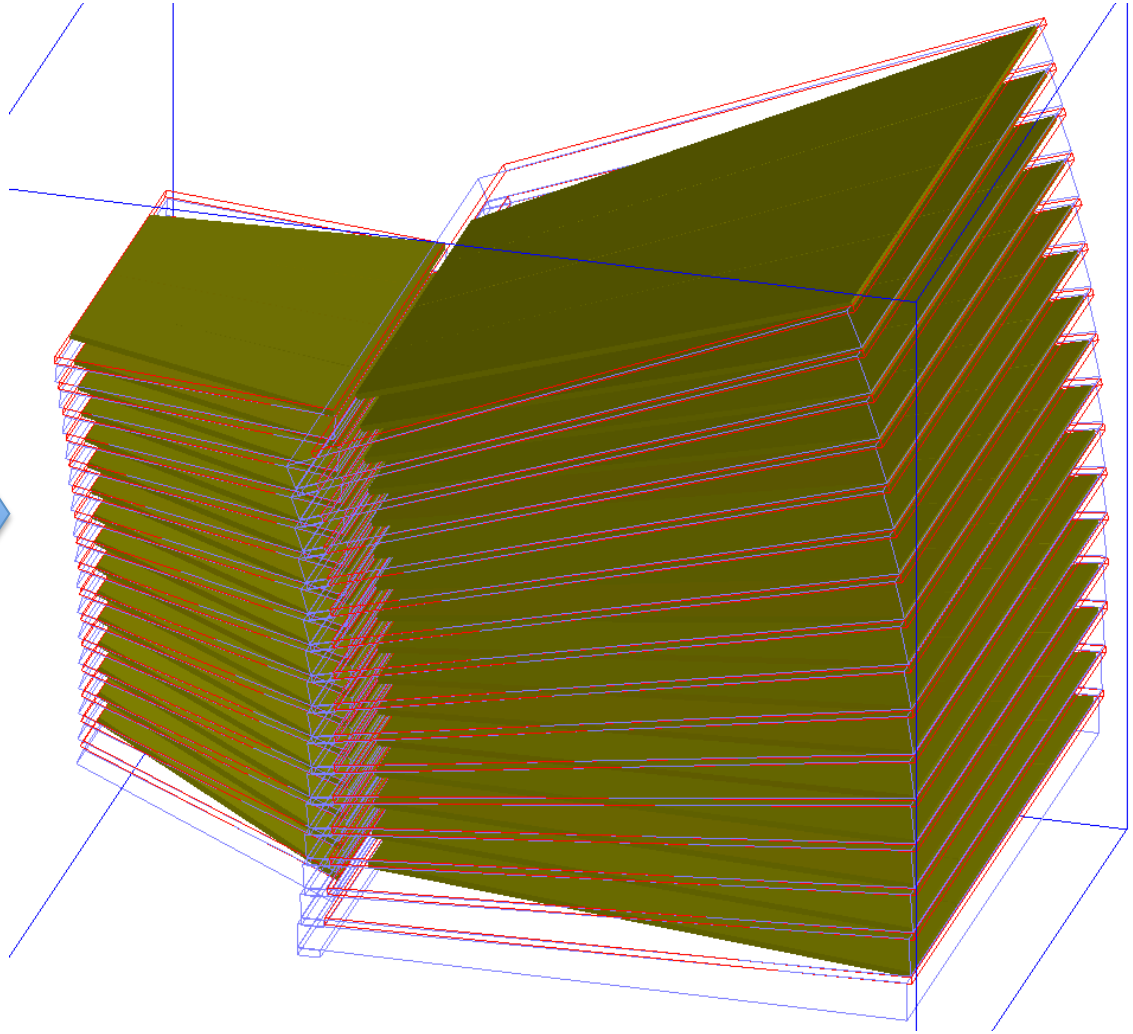

A few event display (10 GeV particle)

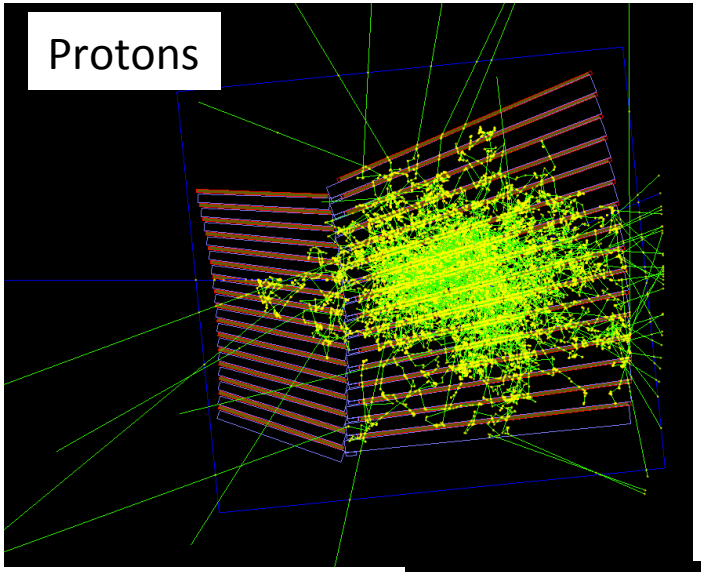

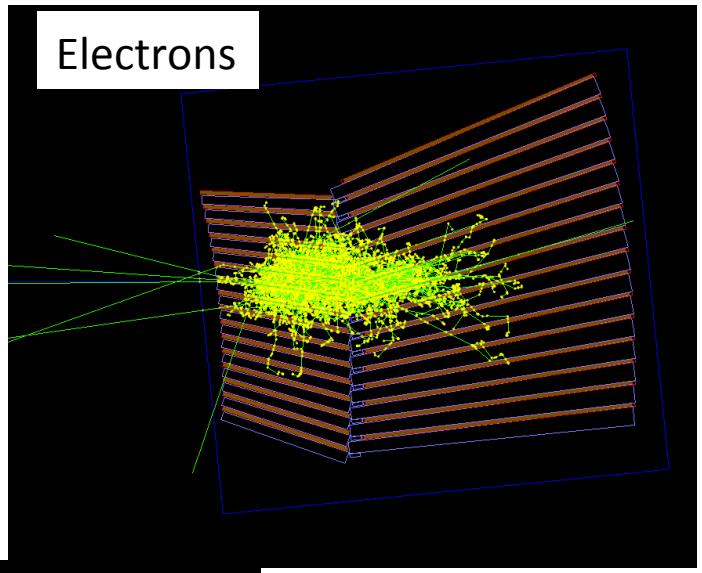

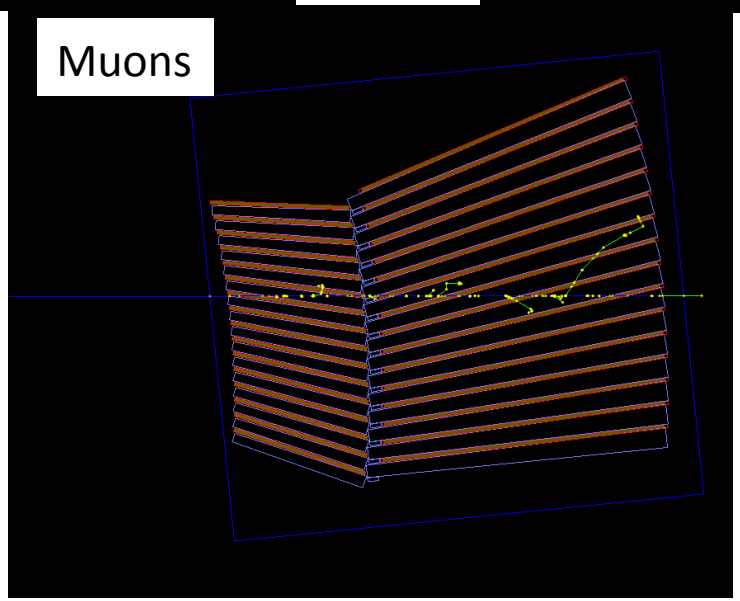

The most relevant terminology

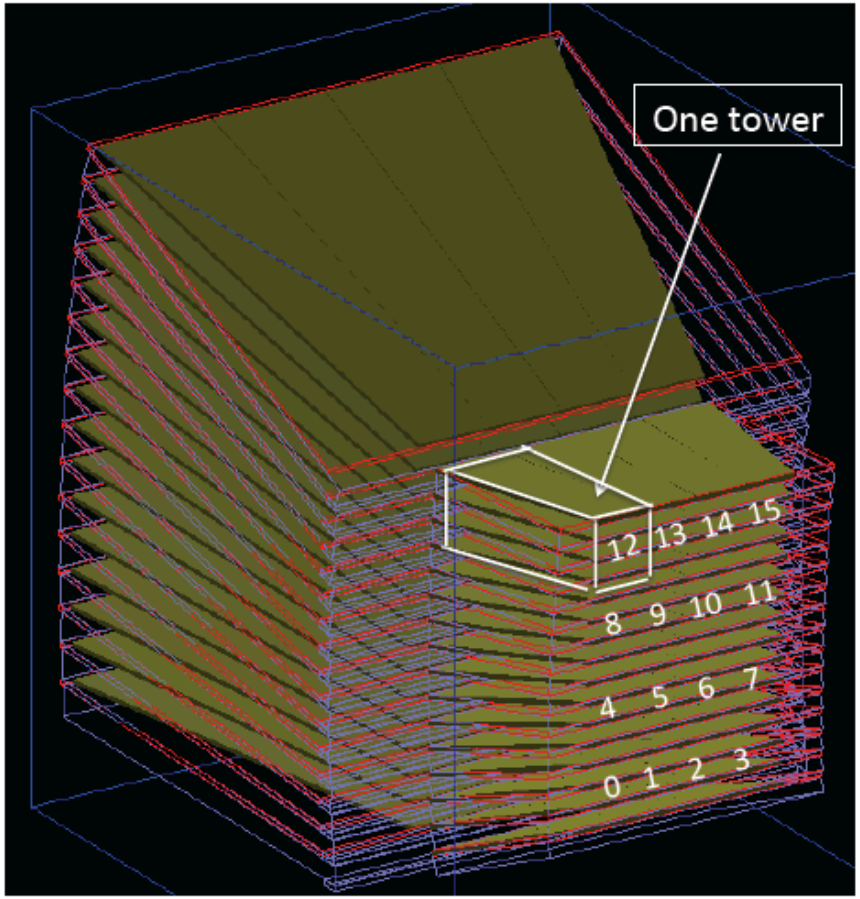

Each tower is equal one readout channel (i.e., 16 towers for the inner and the same for the outer)

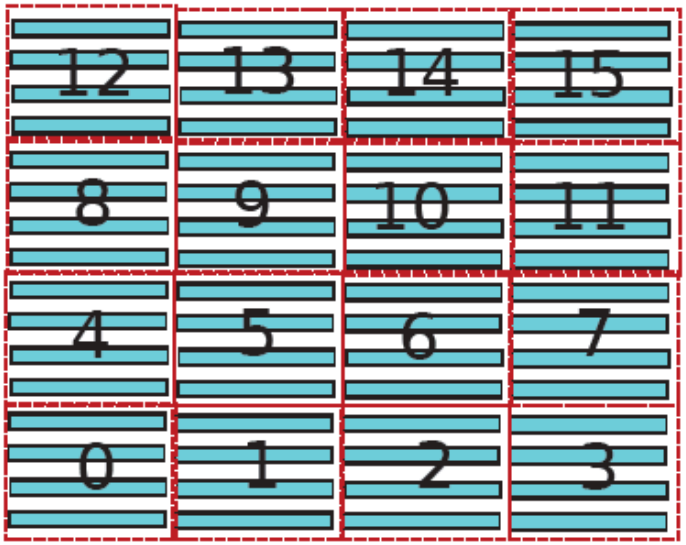

Figure 3: HCal tower layout viewed from the front both for H1 and H2.

Total material budget

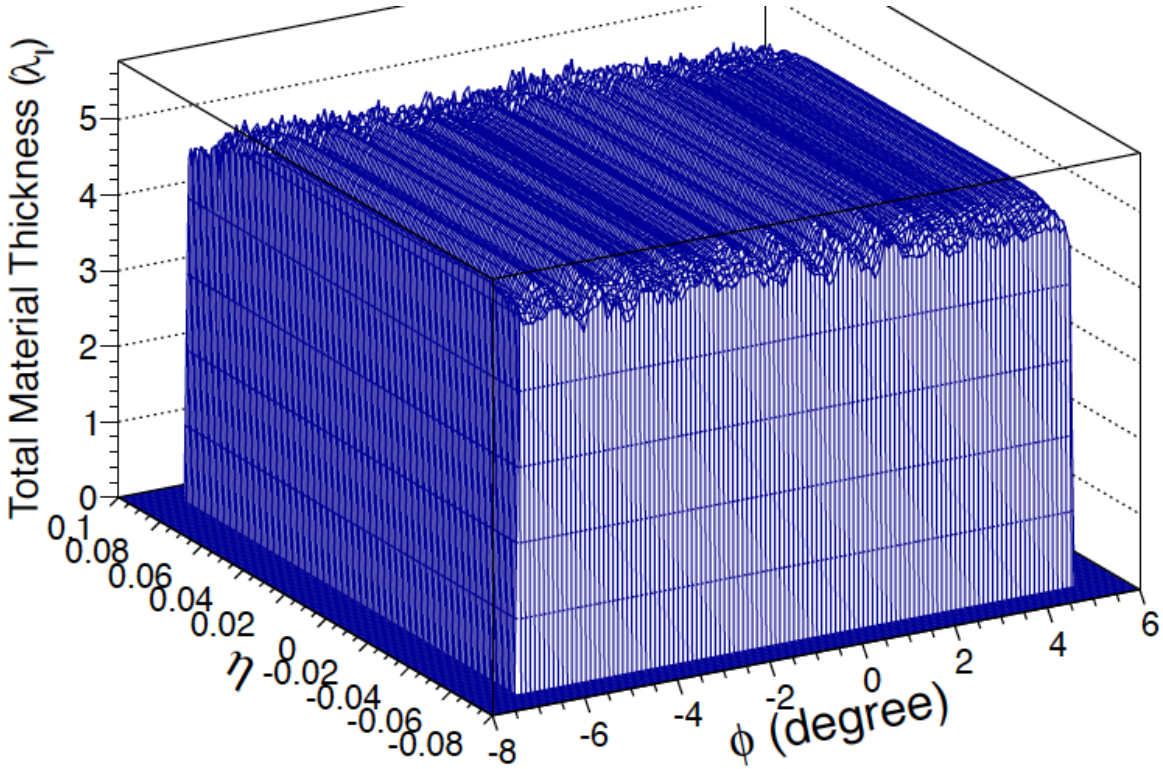

Figure 9: Total material thickness in units of interaction length (λ_I) for the HCal prototype, obtained from simulation with geantinos.

A few important variables

E_{vis} is the visible energy deposited in the scintillators.

E_{invis} is the energy deposited in the absorbers, which can not be seen experimentally.

E_{leak} includes the energy leakage at the back of the calorimeters, lateral or sideway energy leakage, and the energy with the escaped particles.

Sampling fraction factor (SF) is the ratio between the visible energy and total deposited energy

$$\boxed{SF = \frac{E_{vis}}{E_{vis} + E_{invis}},}$$

which is usually determined by the minimum ionization muons.

Shower center of gravity (CG) is calculated as

$$CG = \frac{\sum_{i=1}^{n} E_i^{dep} \times r_i}{\sum_{i=1}^{n} E_i^{dep}},$$

where r_i and E_i^{dep} are the position and energy loss of track hit i.

Sampling fraction factor

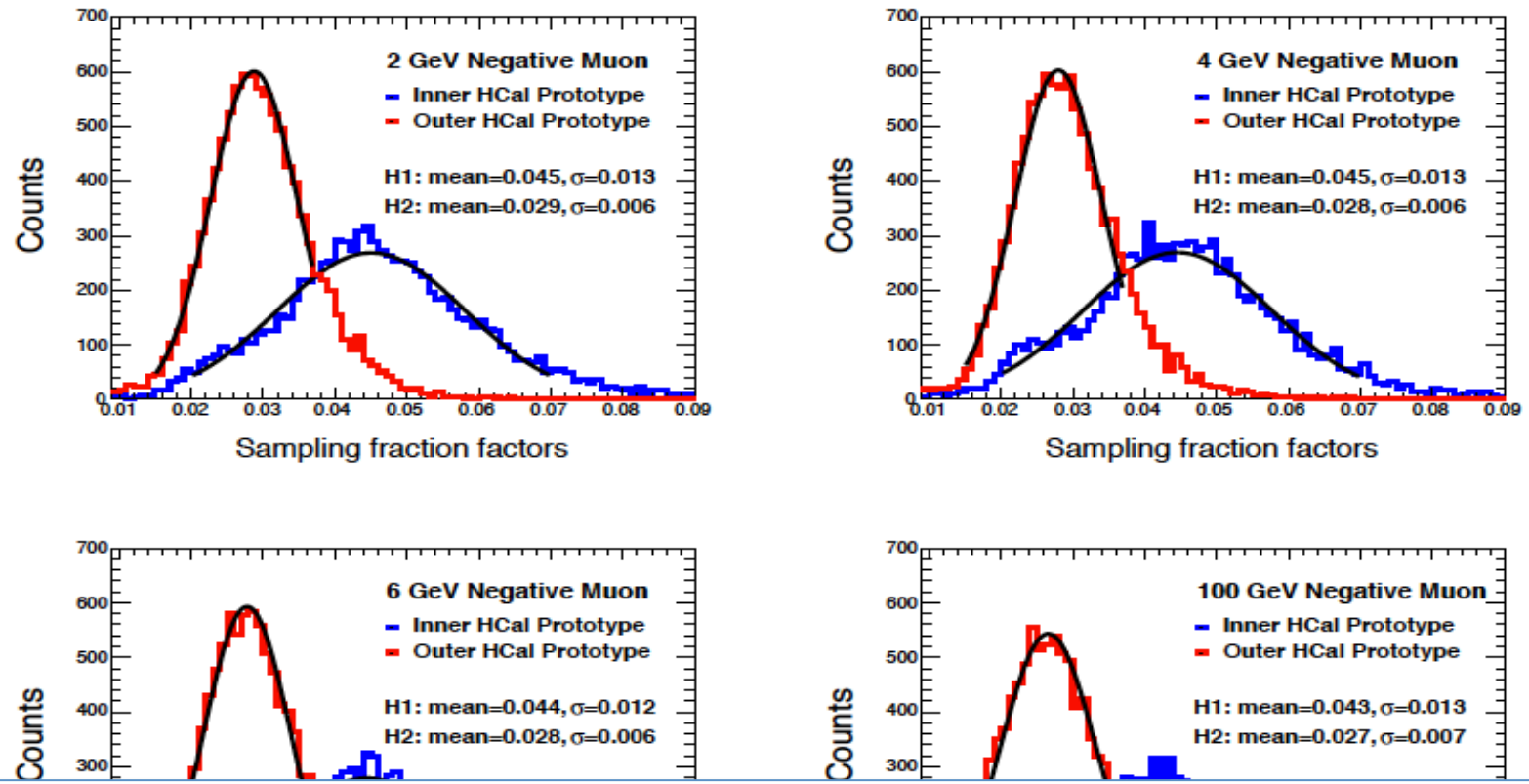

The second method of determining the sample fraction factor is given as follows:

$$SF = \frac{dE/dx(\mu) \times L(scint)}{dE/dx(\mu) \times L(scint) + dE/dx(\mu) \times L(abs)},$$

Figure 19: Sampling fraction factors calculated using muons at different energy from simulation.

Calibration with cosmic rays

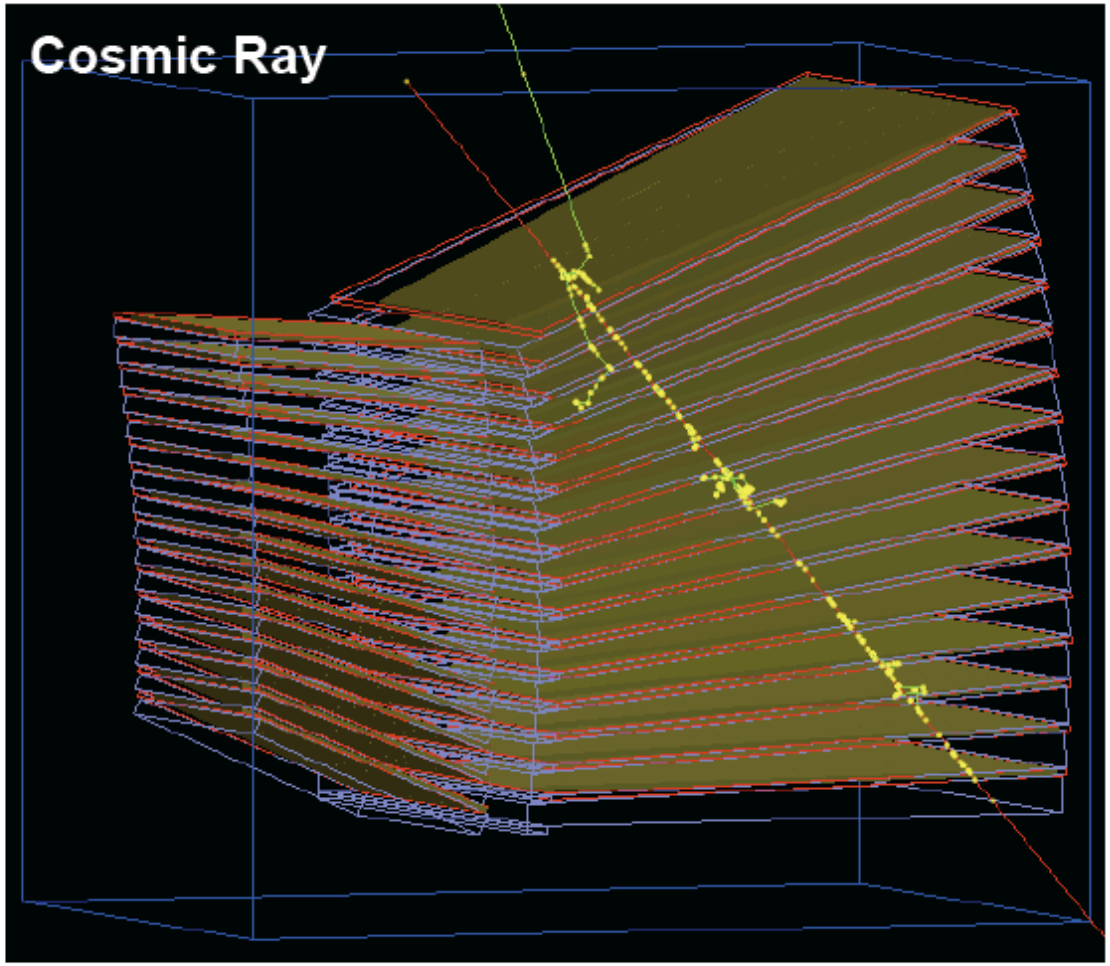

Figure 31: Event display for a cosmic ray event in the HCal prototype.

Cosmic ray spectra (Inner HCal) from simu

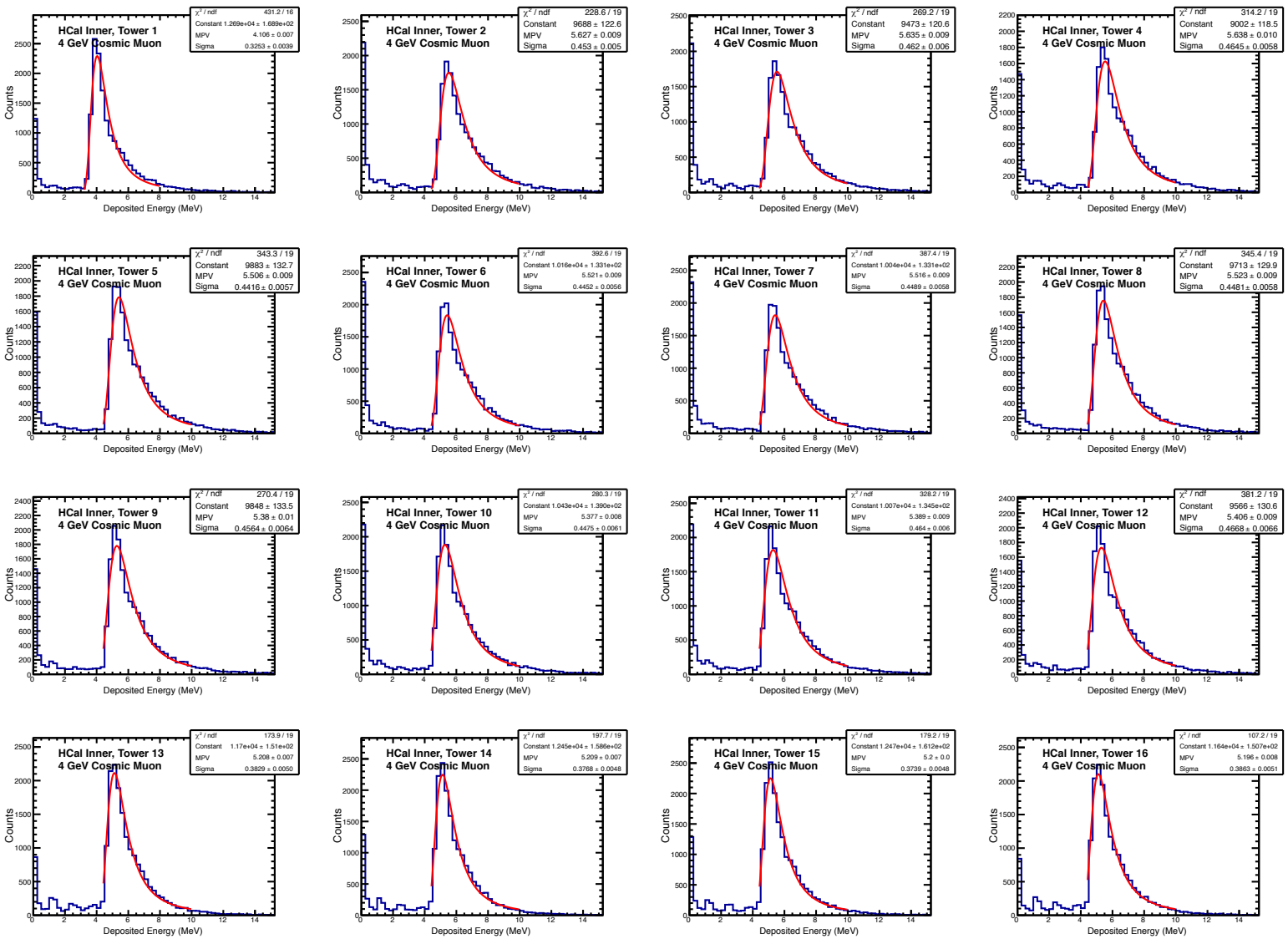

Cosmic ray data spectra (Inner)

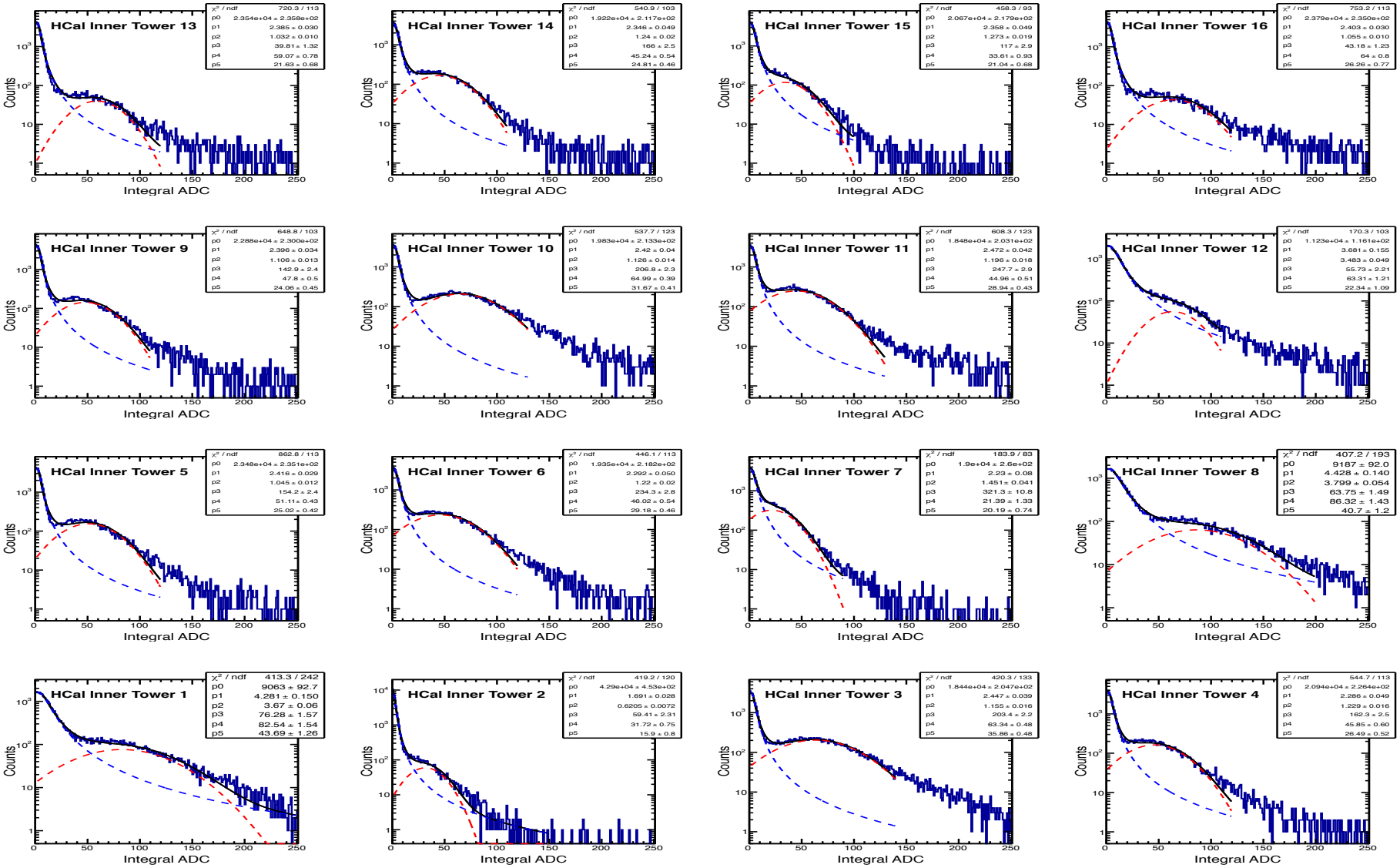

Energy reconstruction in towers

Once the integrated ADC signal is determined properly, it is relatively easy to evaluate the deposited energy as follows

$$E(ch) = I(ch) \times \frac{E_{dep}^{cosmic}(ch)}{ADC_{dep}^{cosmic}(ch) \times SF(muon)}, \tag{5}$$

where $E_{dep}^{cosmic}(ch)$ is the total deposited energy extracted from the Geant4 simulation, $ADC_{dep}^{cosmic}($ is the integrated ADC measured from the cosmic data, SF(muon) is the muon sampling fraction factor calculated by using the Geant4 simulation. In order to remove detector noise, minimum threshold value cut (= 15 MeV) is applied to $E(ch)$ in calculating the total deposited energy.

Simulation and Data Comparison

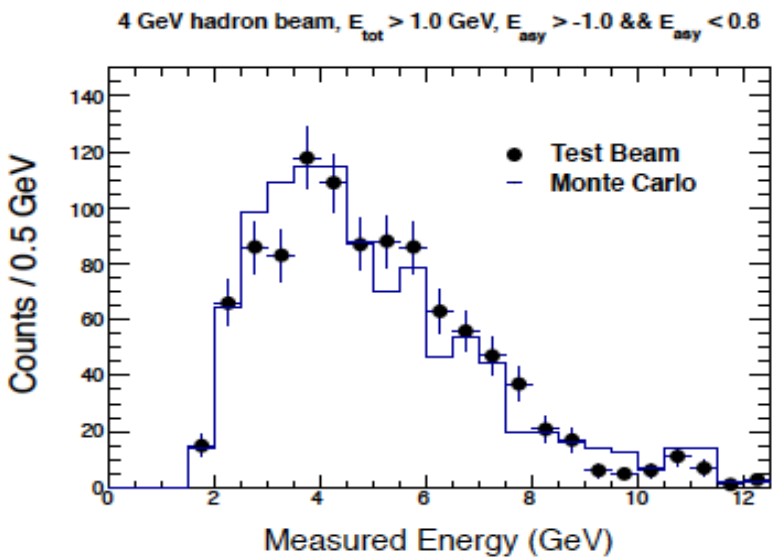

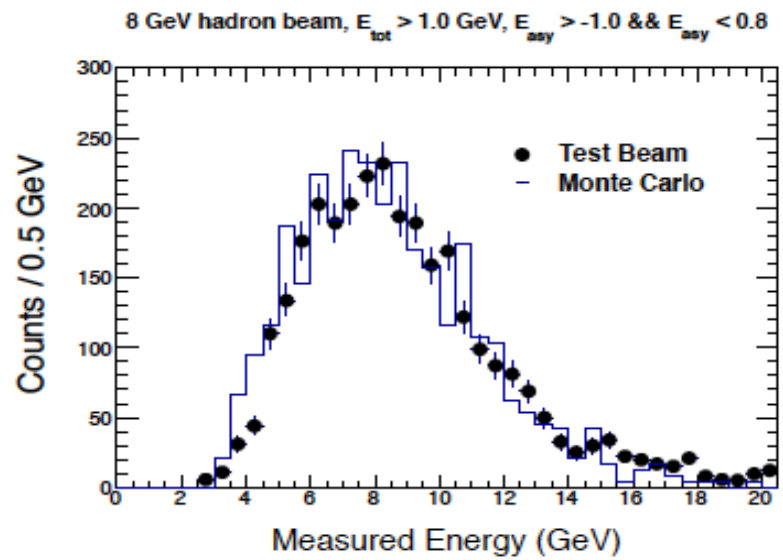

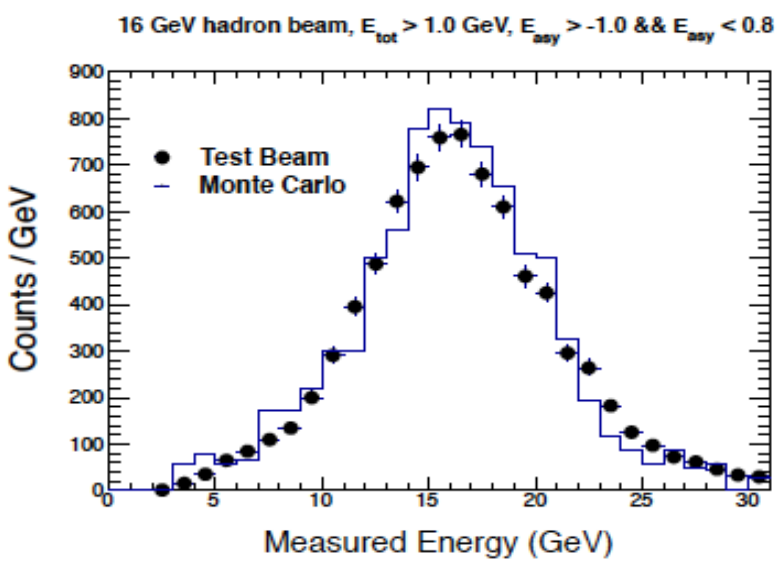

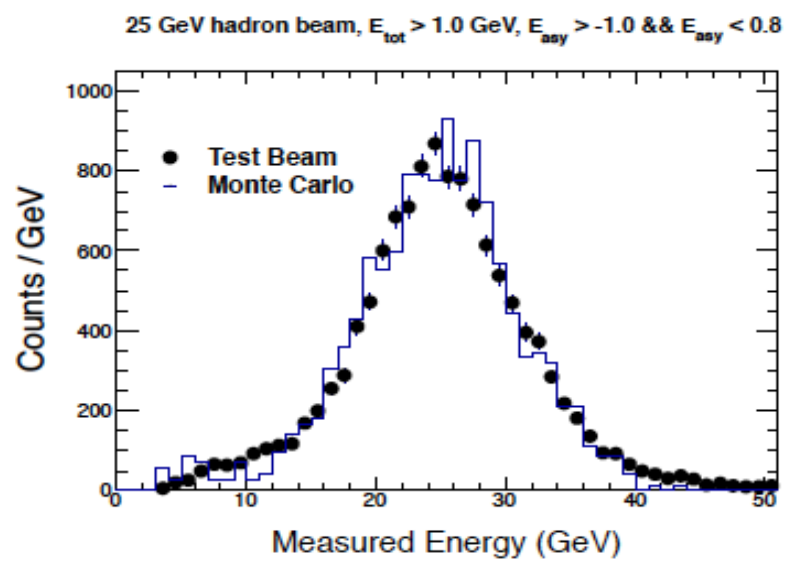

1st Hcal Prototype Results

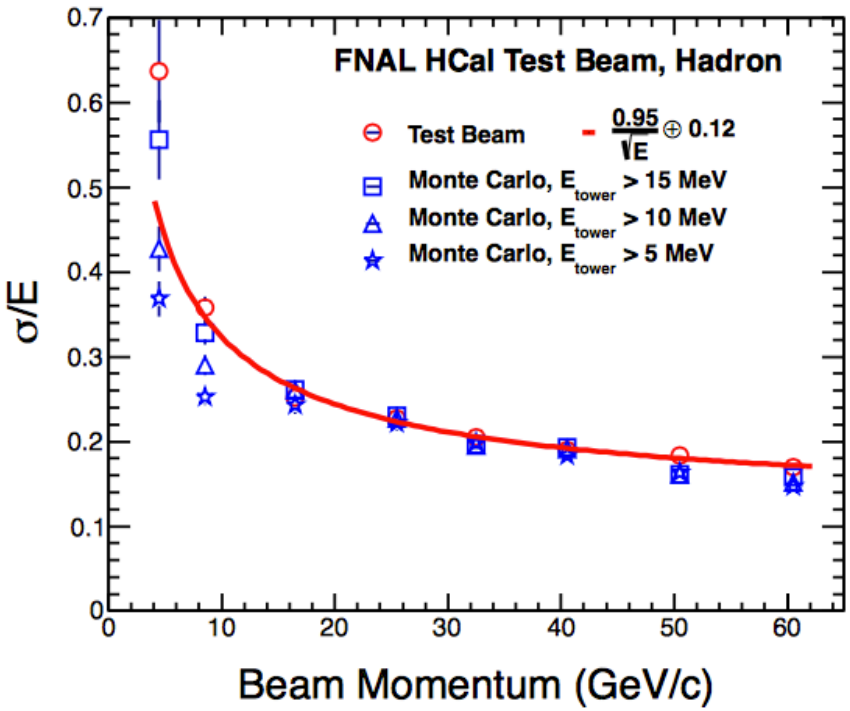

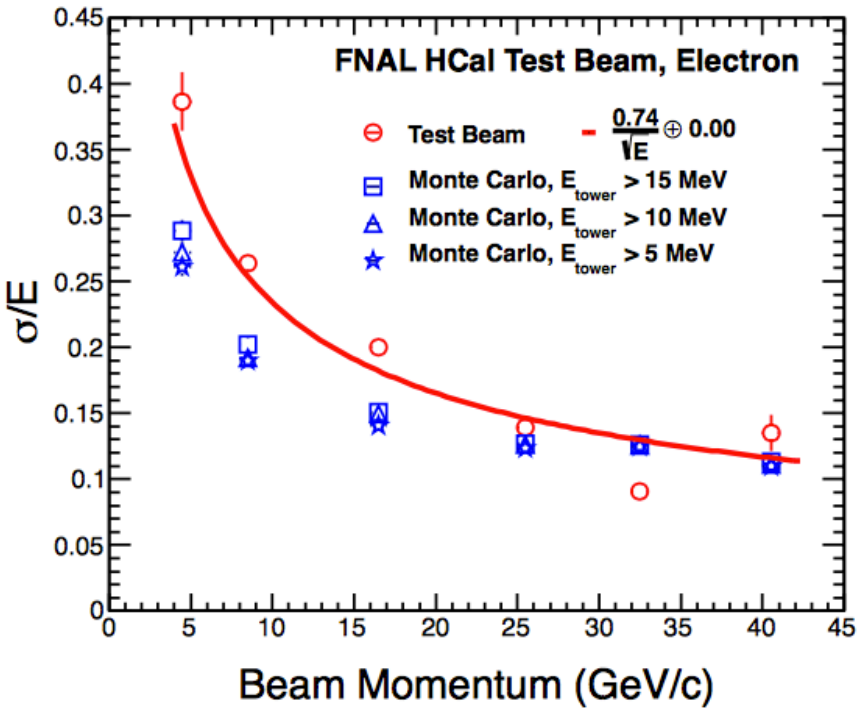

- Energy resolutions from GEANT4 simulation result and test beam measurement are comparable.

New HCal Prototype Detector

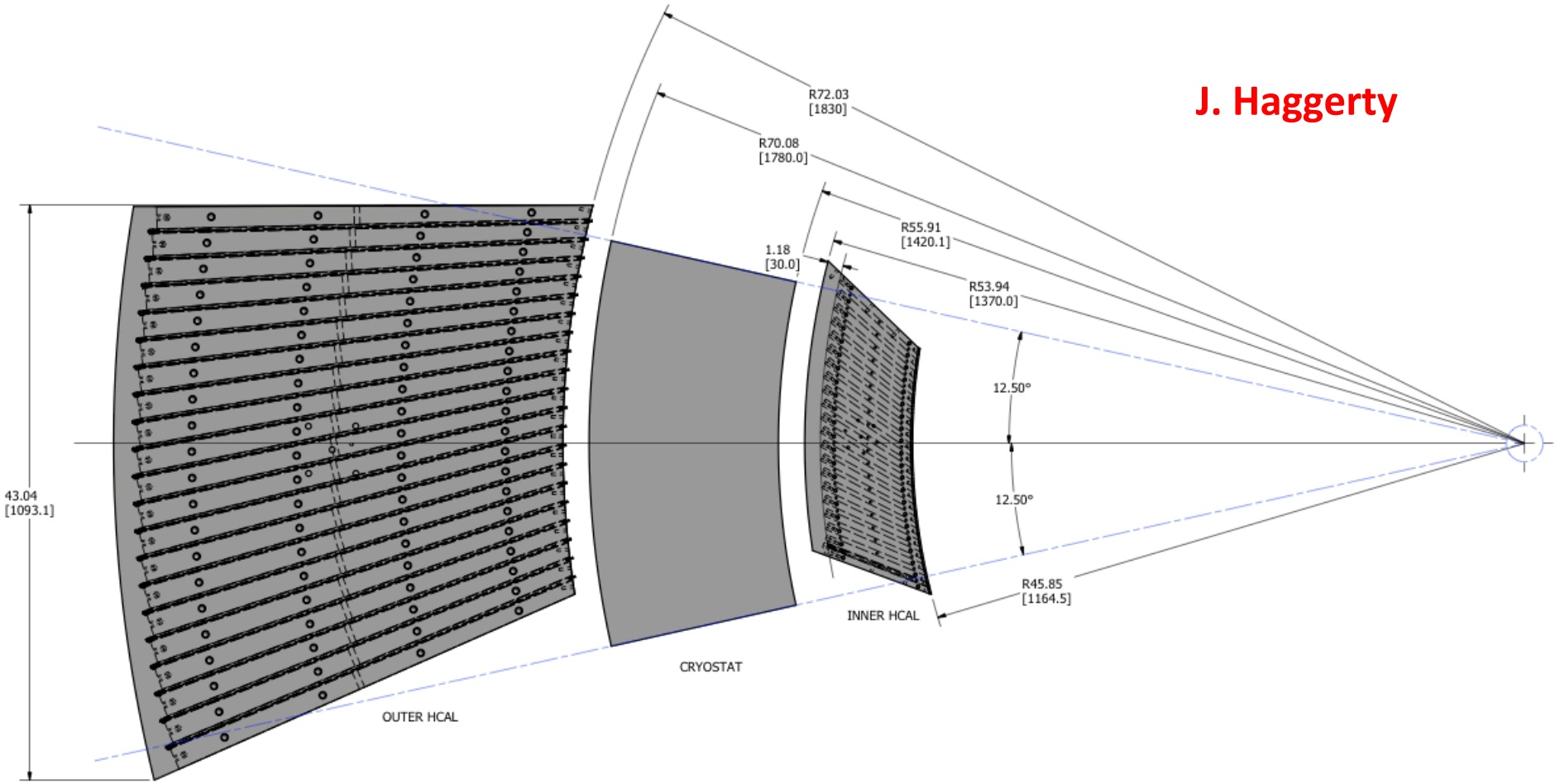

- Two segments (inner and outer), 20 layers of steel/scintillator plates in each segment.

Some Event Display

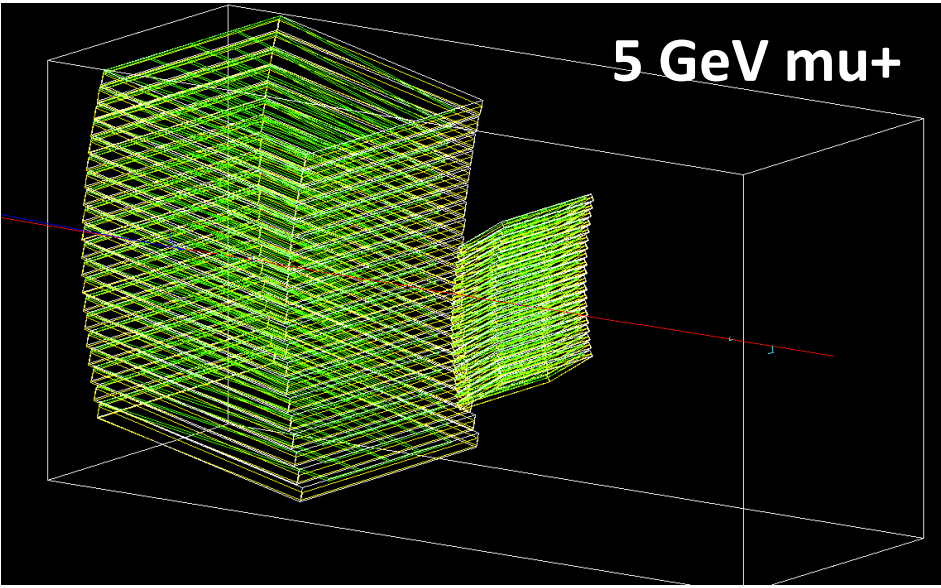

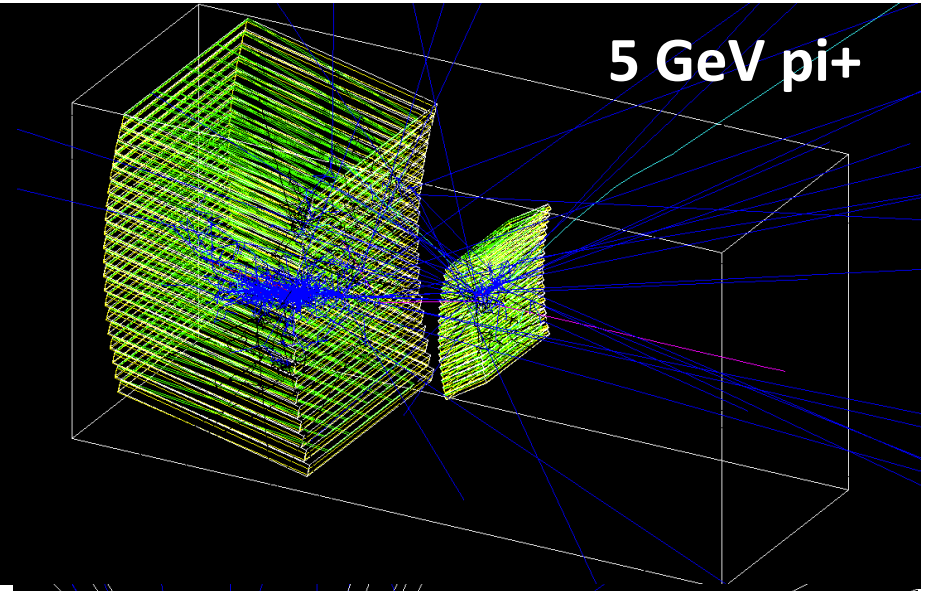

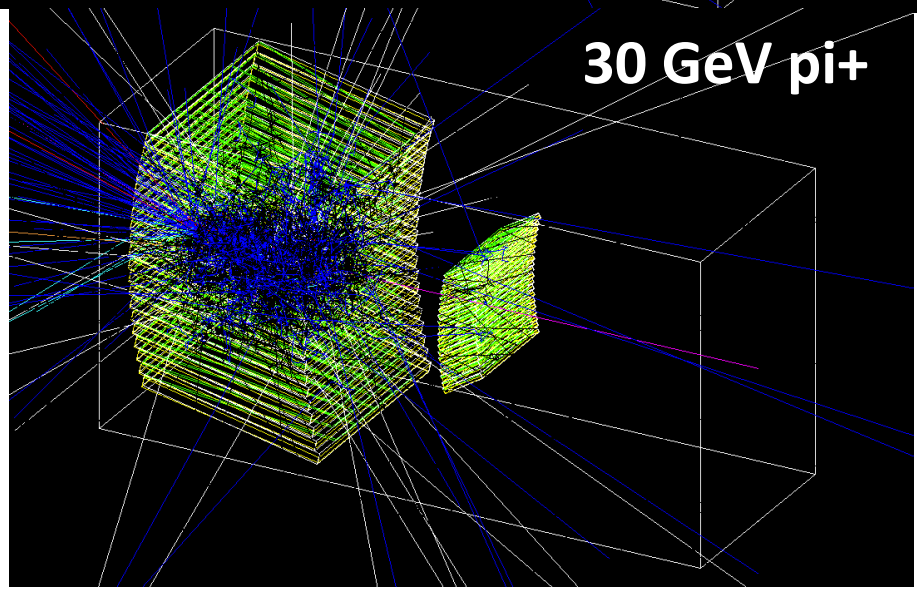

- 5 GeV pi+ shower distribute in both inner and outer Hcal
- 30 GeV pi+ shower mostly distribute in outer HCal

https://github.com/EIC-eRD11/sPHENIX-HCalProto

Cosmic Ray Calibration at IR ?

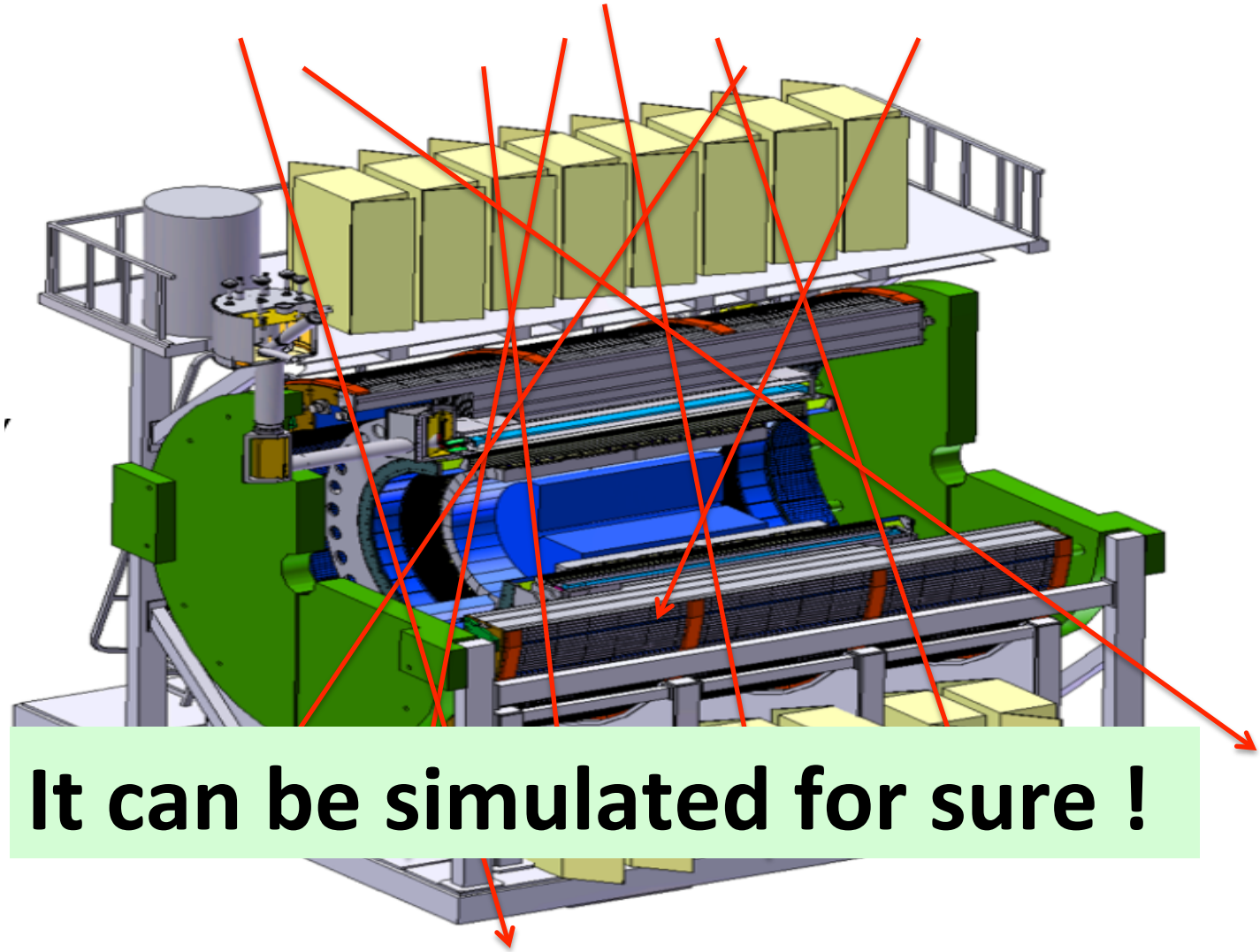

It can be simulated for sure !

For Inner tower 6

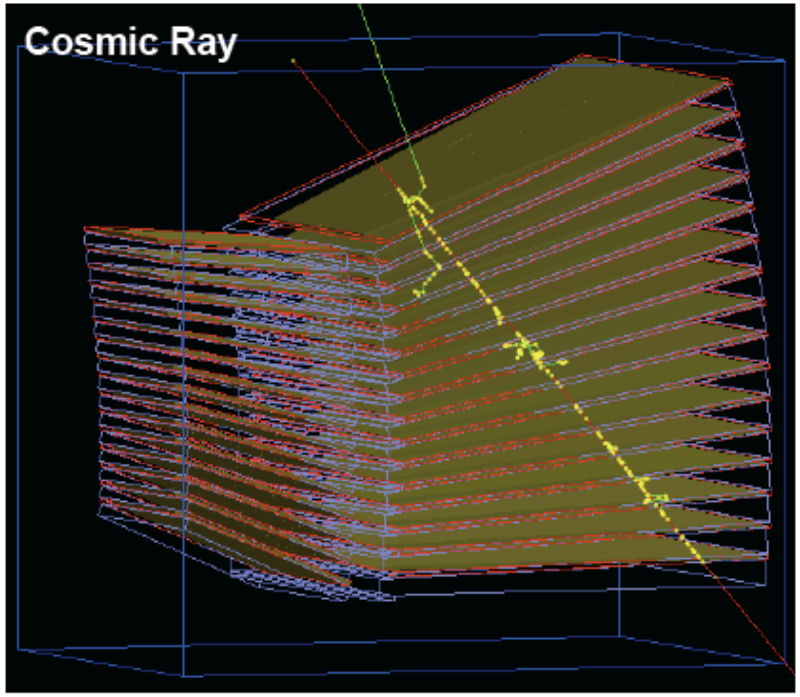

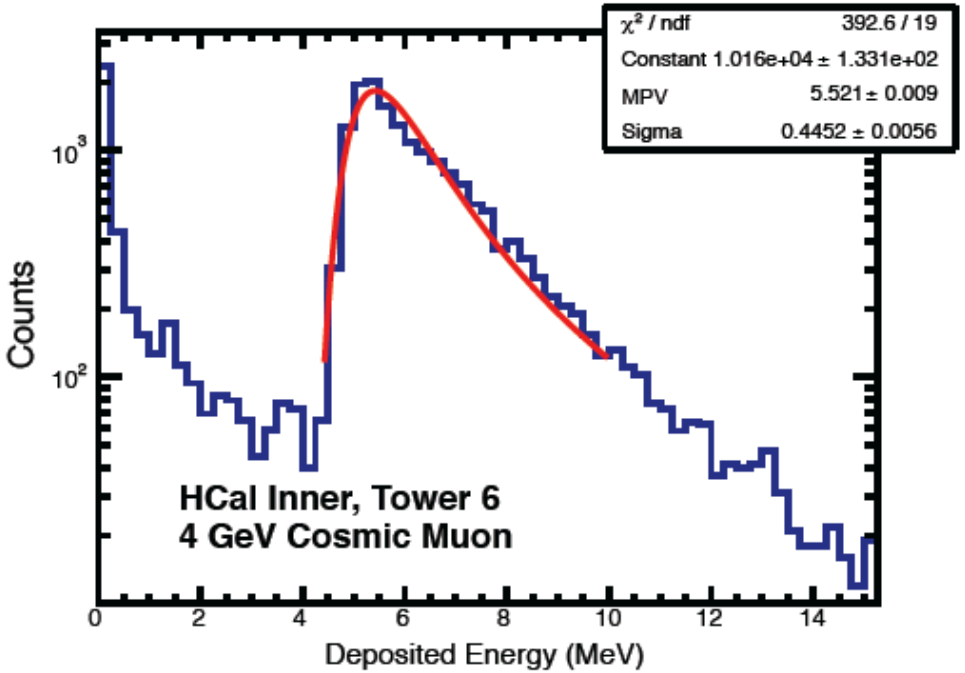

Figure 38: Event displays of cosmic ray simulation (left panel), and signal in H1 tower 6.