Inner Detector Integration - TPC

KLAUS DEHMELT

IDITF MEETING

MARCH 17, 2017

Stony Brook University | The State University of New York

PHENIX

TPC Overview

- TPC consists of
  - Inner field cage (FC)
  - Outer FC
  - Central Membrane
  - End plates × 2
  - Readout modules × 72 → 24 for each of the *three* radial locations
  - Electronics attached to each readout module
  - Laser calibration system
  - Gas supply system
- All info so far provided by Tom H., Jin H., Takao S., Rob P., Bob A.

TPC Overview

- TPC in sPHENIX

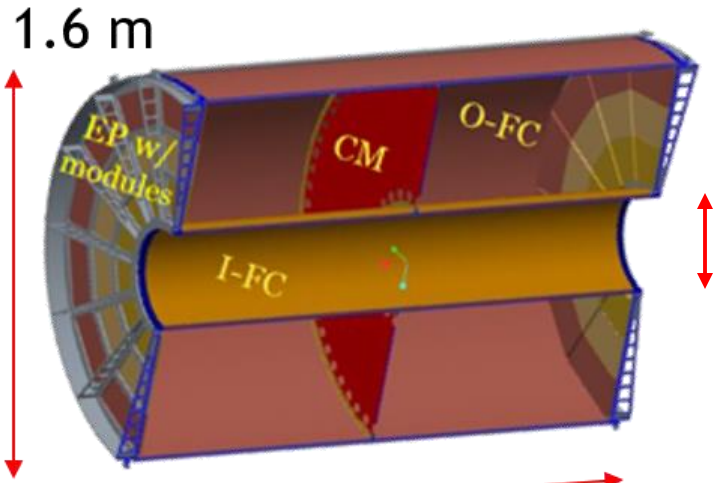

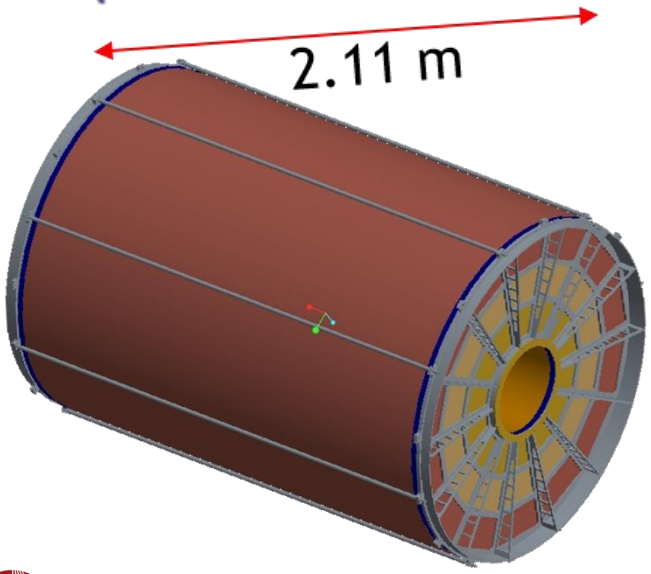

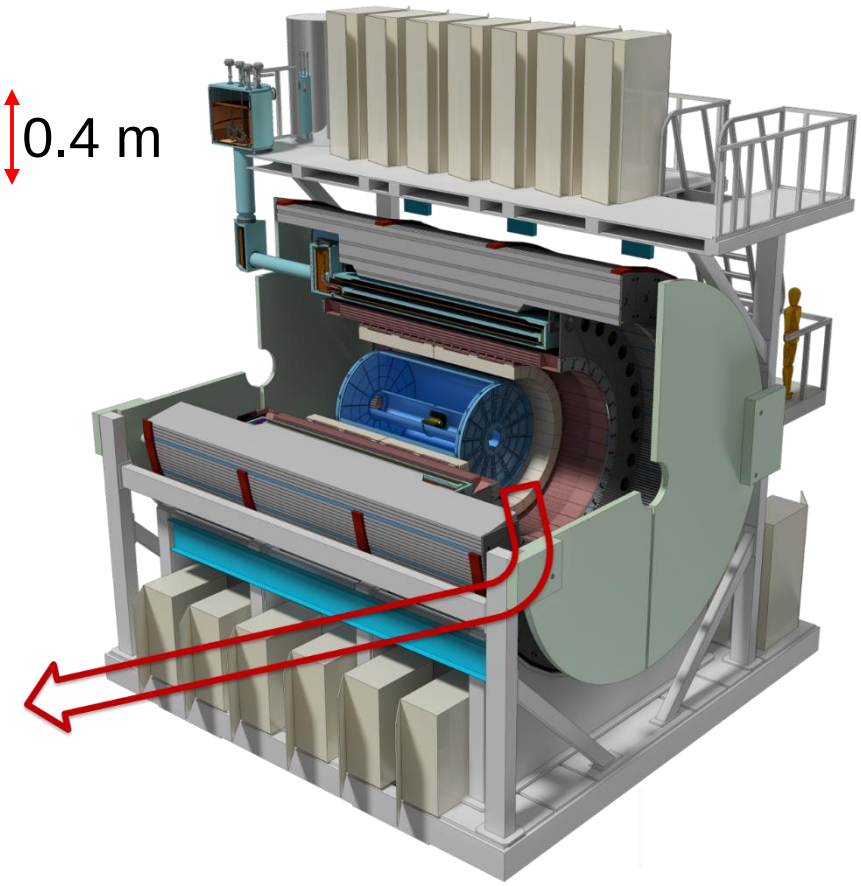

TPC Overview

- End plate + modules

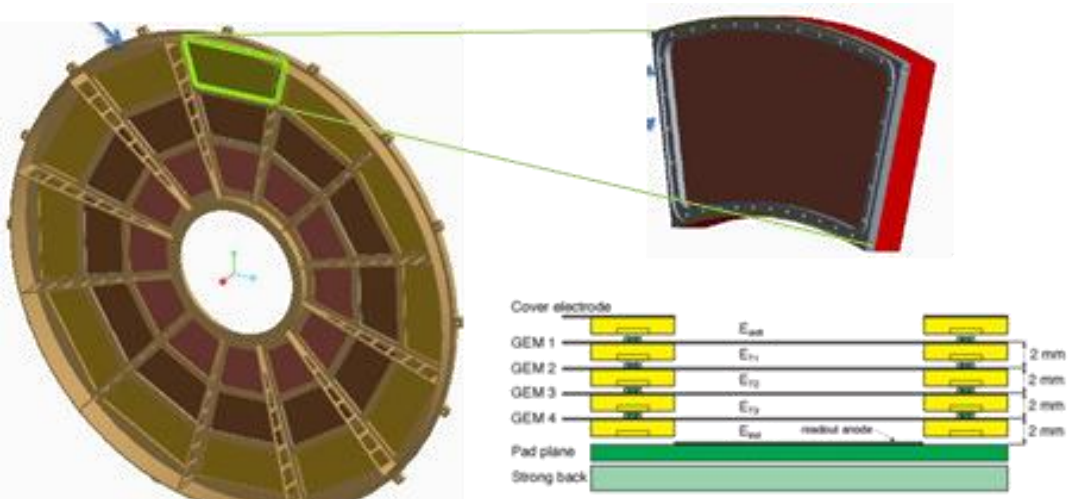

72 modules
2(z), 12(ϕ), 3(r)

Quad-GEM Gain Stage
Operated @ low IBF

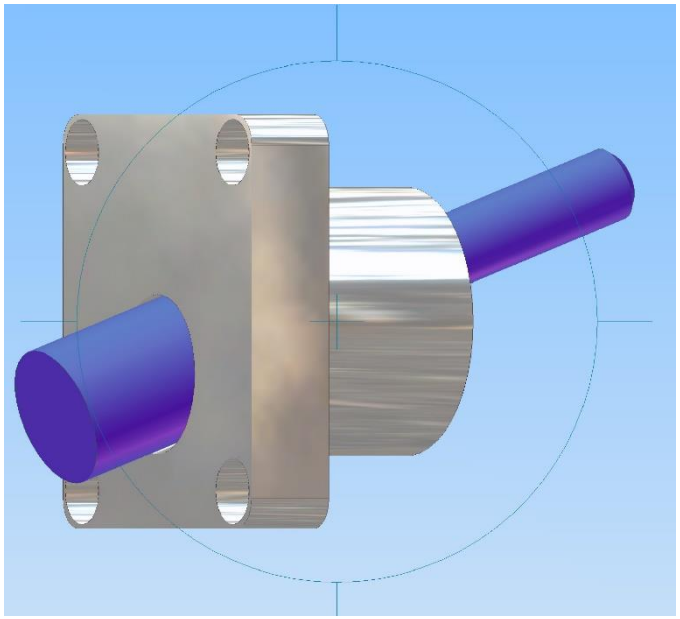

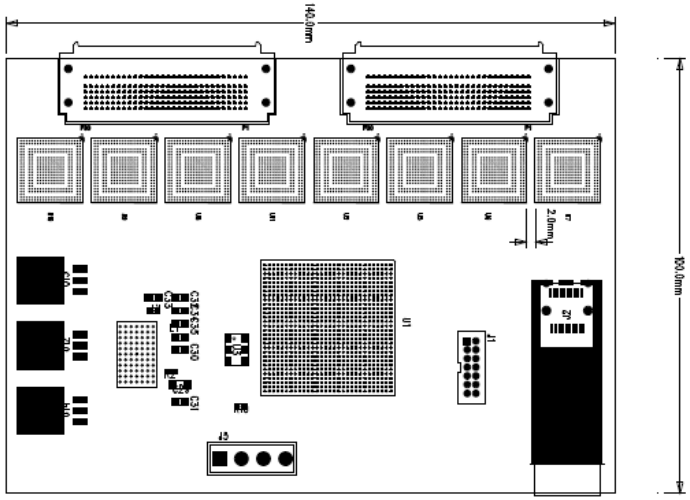

TPC Overview

- TPC fastened to inner HCal

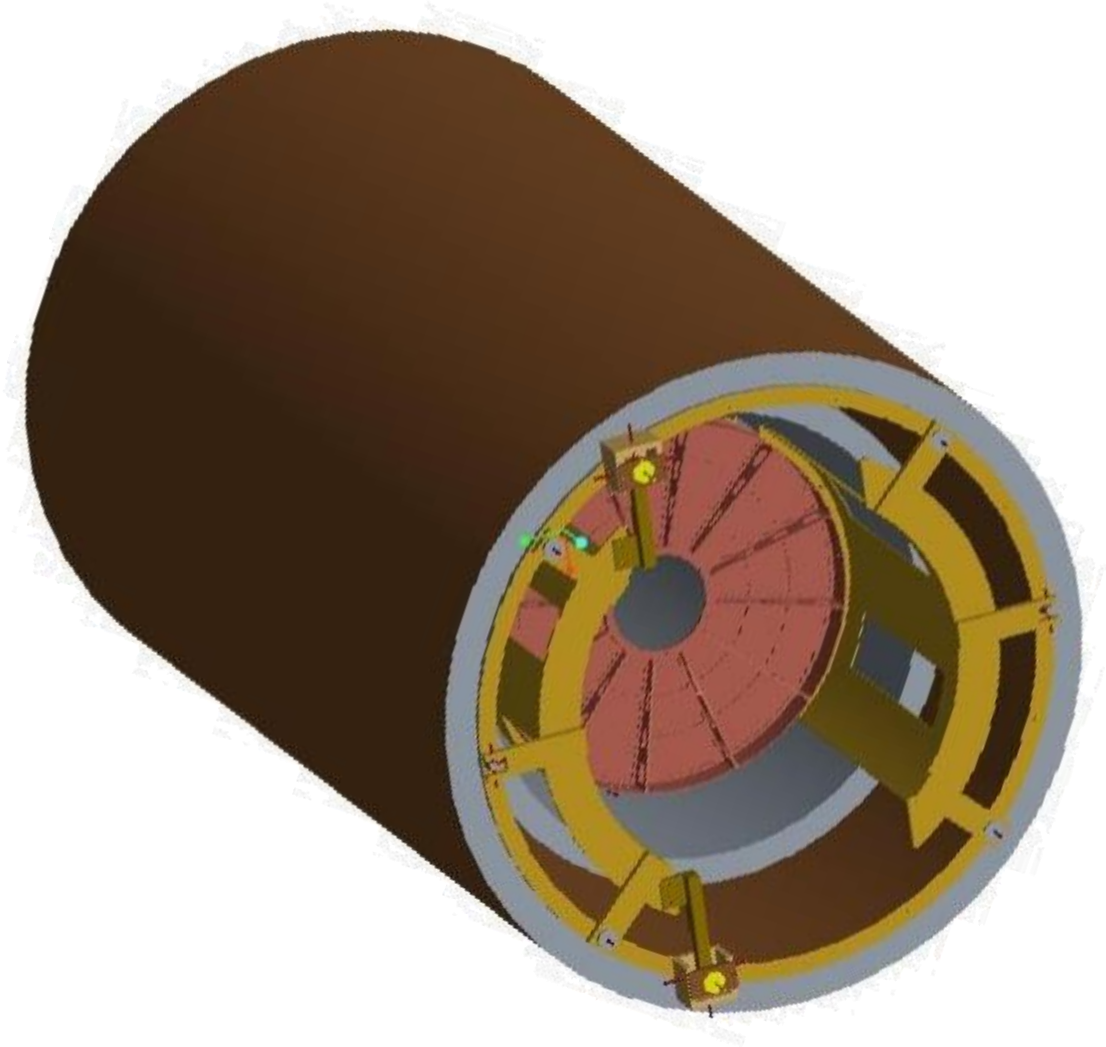

TPC Overview

- Inner FC, Outer FC and Central Membrane require HV
  - Transport HV cable through end plate and wall of outer FC
  - Connect over central membrane to inner FC
  - Second, possibly third HV cable through end plate and wall to eighth (mesh) and first field strip
- End plates require
  - Gas in-/out-let
  - Laser inserts
- Readout modules require
  - One HV cable for GEMs per module → 36 HV cables per end plate
  - LV cables for electronics
  - Fibers for electronics

Cables, Fibers, Electronics

- HV from membrane to on-carriage rack (~40 kV)

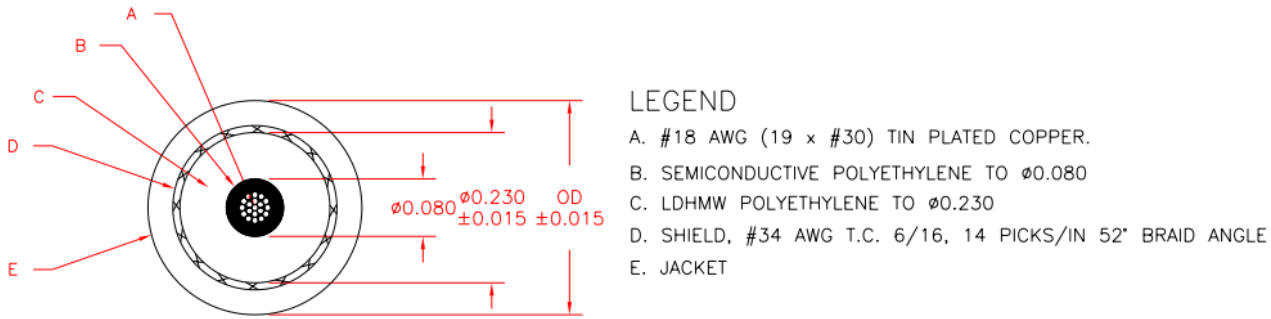

JACKET TYPE	DEFINITION	COLOR	WALL	OD	AVAILABLE LENGTH
N	NEOPRENE RUBBER	BLACK	0.06	0.40	50 FEET
S	SILICONE RUBBER	RED	0.03	0.34	50 FEET
T	THERMOPLASTIC RUBBER	BLACK	0.06	0.40	
V	VINYL	RED	0.03	0.34	

- GEM modules: 1 × SHV cable/module (5 kV rating)
  → 36 × SHV cable/end plate, local on-TPC distribution
- Mesh: 1 × SHV cable (< 6 kV rating), local on-TPC distribution

Cables, Fibers, Electronics

- Fibers
  - Cables/fiber requirements from *detector interface to on-carriage racks*: **TPC data fiber**
  - Size (dia.)/ratings/specs for each different cable/fiber: **Pre-terminated MTP (F) 48F - MTP (F) 48F trunk cable; (part not determined) Outer diameter = 6-9 mm**
  - Connector type/size/spec for each end of cable: **MTP 48-Fiber Female connector**
  - Length (do they all need to be equal in length?): **5 meters (need feedback)? Identical length required for timing**
  - Interface configuration on detector and in racks: **(2 cables per sector) x (12 sectors) x (2*sides) + 25% spare = 60 cable from TPC to patch panel in racks**
  - Any cable specific info (min bend radius, allowable operating temperature, etc.): **(part not determined, need feedback) Weight = 22-79 kg/km; Max install tension = 600-800 N; Minimal bend radius = 9-27 cm; Operating temperature: 0-70°C**
  - Rack requirements: **None, other than patch panel below**
  - Patch panels, special cable management requirements, etc.: **Patch panel: 5x (1U patch panel each carries 12 MTP-MTP Feed-through, 25% spares included)**

Cables, Fibers, Electronics

- Front End Electronics (FEE)
  - 32 channels/SAMPA chip
  - 8 × SAMPA chips/FEE → 256 ch./FEE
- 300 FEE/end plate
  - 76.8k ch./end plate → 153.6k channels, ~138k channels read out
- 96 × ~10m 10AWG shielded twisted-pair cables for power supply to the FEEs
  - Each twisted-pair cables will be split and distributed to 5-8 FEEs
- Services to a single card
  - LVDC (a few lines, depends upon FPGA, specs yet unknown)
  - Optical (two fibers IN & OUT)

Gas and Cooling Requirements

- Cooling for electronics
  - Power consumption
    - 800 mW/chip
    - 800mW * 8 *1.5 (50% comes from the loss due to regulator) + 2W (FPGA) + 1W (Optical module) = 12.6 W/FEE → assume 15 W/FEE
    - 300 × 15 W = 4.5 kW/end plate
  - Liquid cooling needed → available chiller can handle 5 ton @ 10° C equiv. to ~17 kW, i.e., both end plates; might consider two smaller units

Gas and Cooling Requirements

- TPC's gas volume: ~3.75 m^3, one inlet, one outlet
- Gas mixture based on Ne (~\$1k/m^3) + small admixture of (CF_4, iC_4H_{10}, … TBD) → need recirculating gas system
- Recirculating gas system
  - Pump(s)
  - Gas purifier
  - Gas analyzer
  - Gas safety devices

Gas and Cooling Requirements

- Recirculating gas system (example HERA-B OTR)

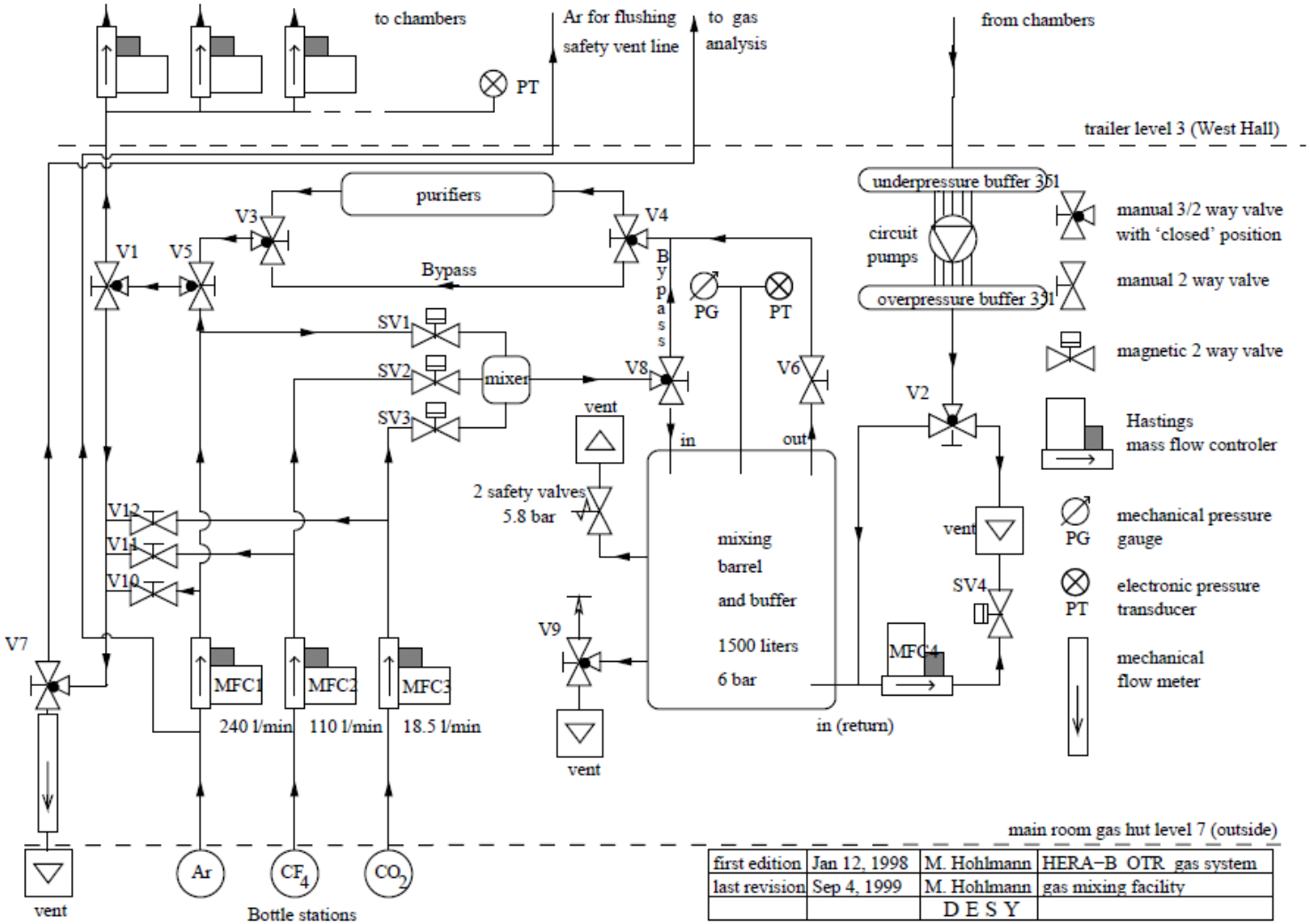

Gas and Cooling Requirements

- Purification system (example HERA-B OTR)

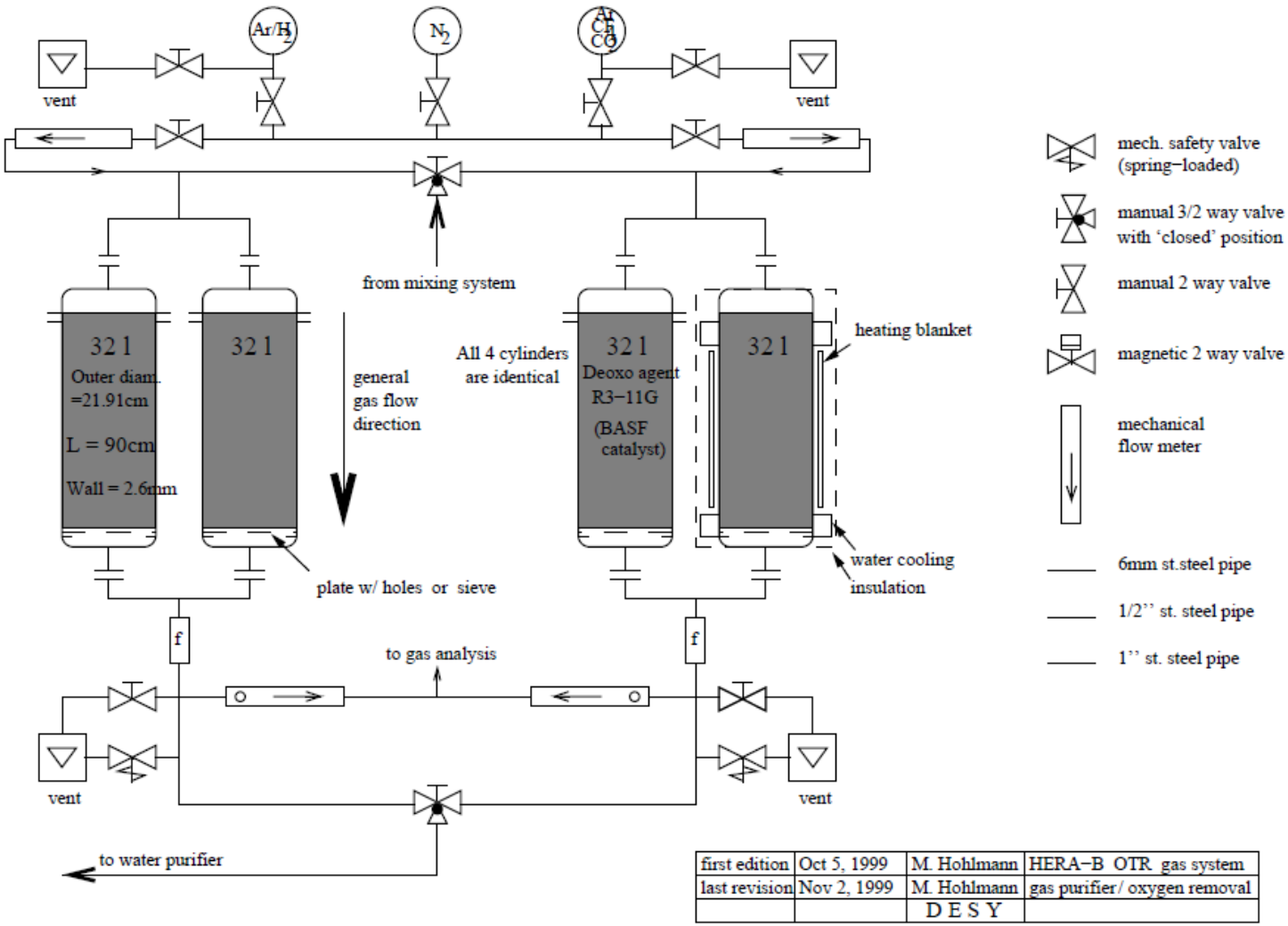

Laser Calibration

- Example laser calibration system

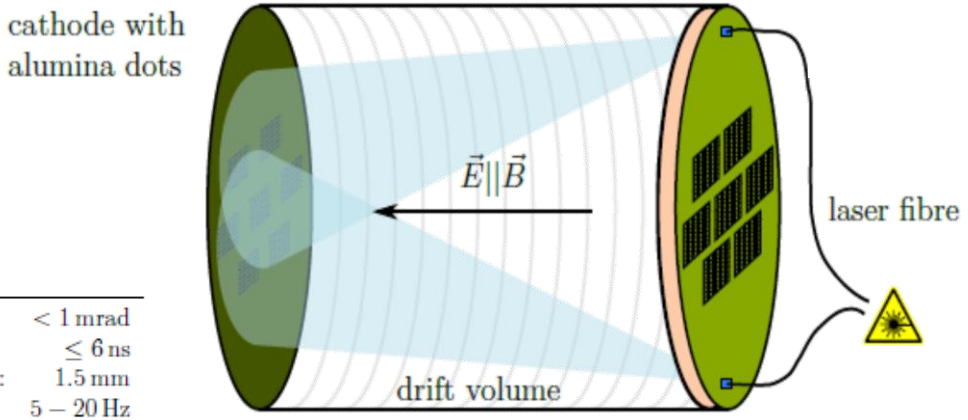

Laser class:	IV	Divergence:	< 1 mrad
Laser type:	Nd:YAG	Pulse width:	≤ 6 ns
Wavelength:	266, 532, 1064 nm	Diameter of the Laser pulse y_0:	1.5 mm
Power:	60 mW	Repetition rate:	$5 - 20$ Hz
Energy:	3 mJ		

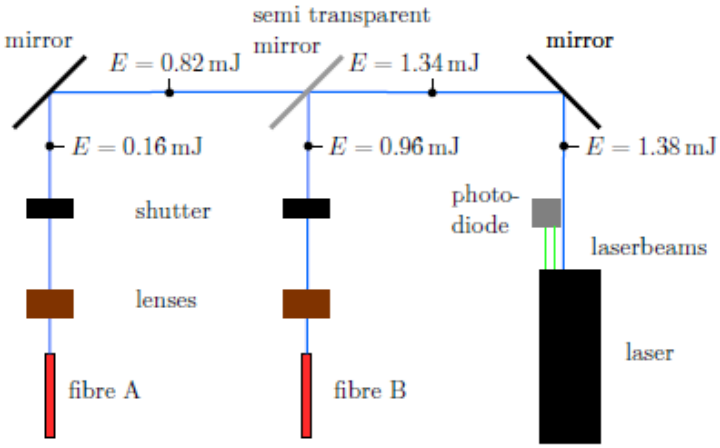

Mounting/Installation Requirements

- TPC needs to be installed while beam-pipe is removed

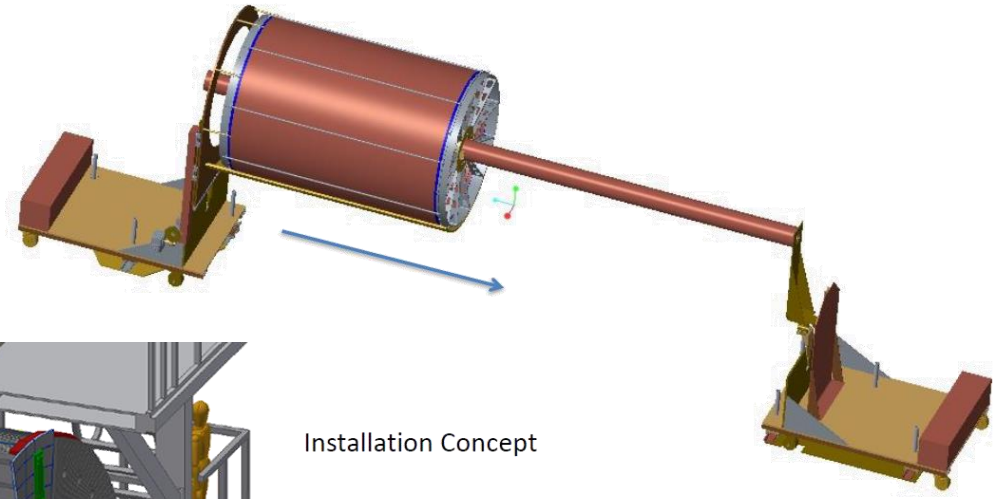

Installation Concept

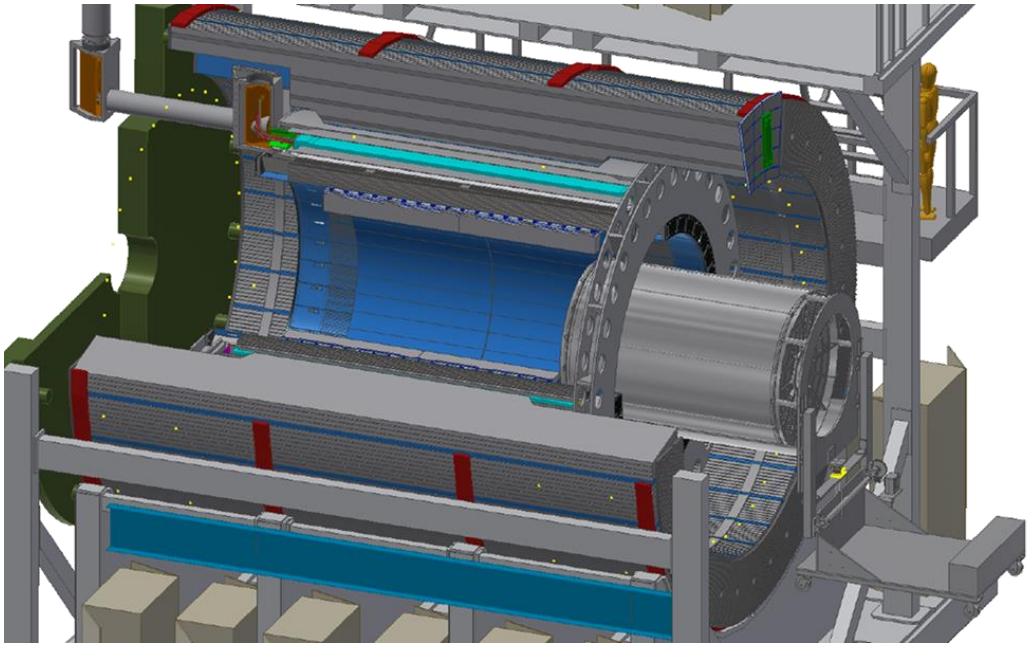

Access Maintenance/Access Requirements

- If needed
  - Access to end plates required
  - Platform work in-situ required

⋮