TDAQ Upgrade

Hal Evans
Indiana University

Outline

- R&D Organization and Participating Institutes
- System Overview
- New Projects Moving to Construction on 2018 Timescale
  - FTK (covered by Mel)
  - L1Calo
  - HLT/DAQ: generic changes + requirements of IBL, Muon, Pixel, FTK,...
  - Forward Muon Upgrade
- Preliminary Budget Profiles
- Note: will not present recent progress on TDAQ R&D

Preliminary Organization

4.6	TDAQ Upgrade	
4.6.1	LVL1 Trigger	
4.6.1.1 4.6.1.2 4.6.1.4	Calorimeter Muon Track Trig	MSU Arizona, Boston, Harvard, Michigan *FTK Institutes* + Indiana, LBNL, Penn, Yale
4.6.2	FTK	Argonne, Chicago, Illinois, NIU, (Fermilab)
4.6.2.1	Engineering design/Prototyping	
4.6.3	HLT	Argonne, Irvine, MSU, SLAC, Wisconsin
4.6.3.1	Software Development	
4.6.4	Simulation	Argonne, BNL, Chicago, Indiana, MSU, NIU, Penn, SLAC, Yale
4.6.4.1	Software Development	

Overview & Challenges

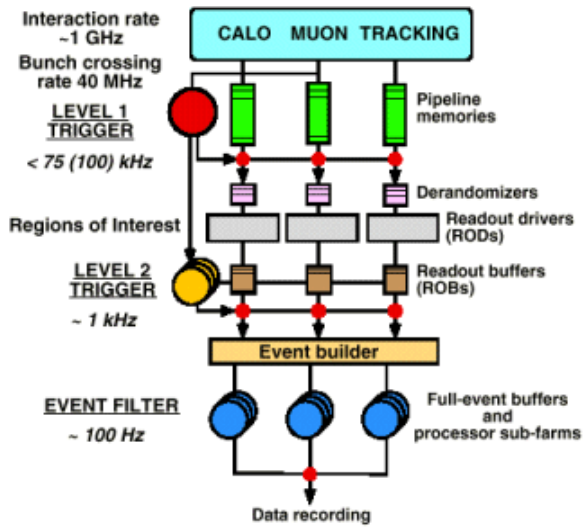

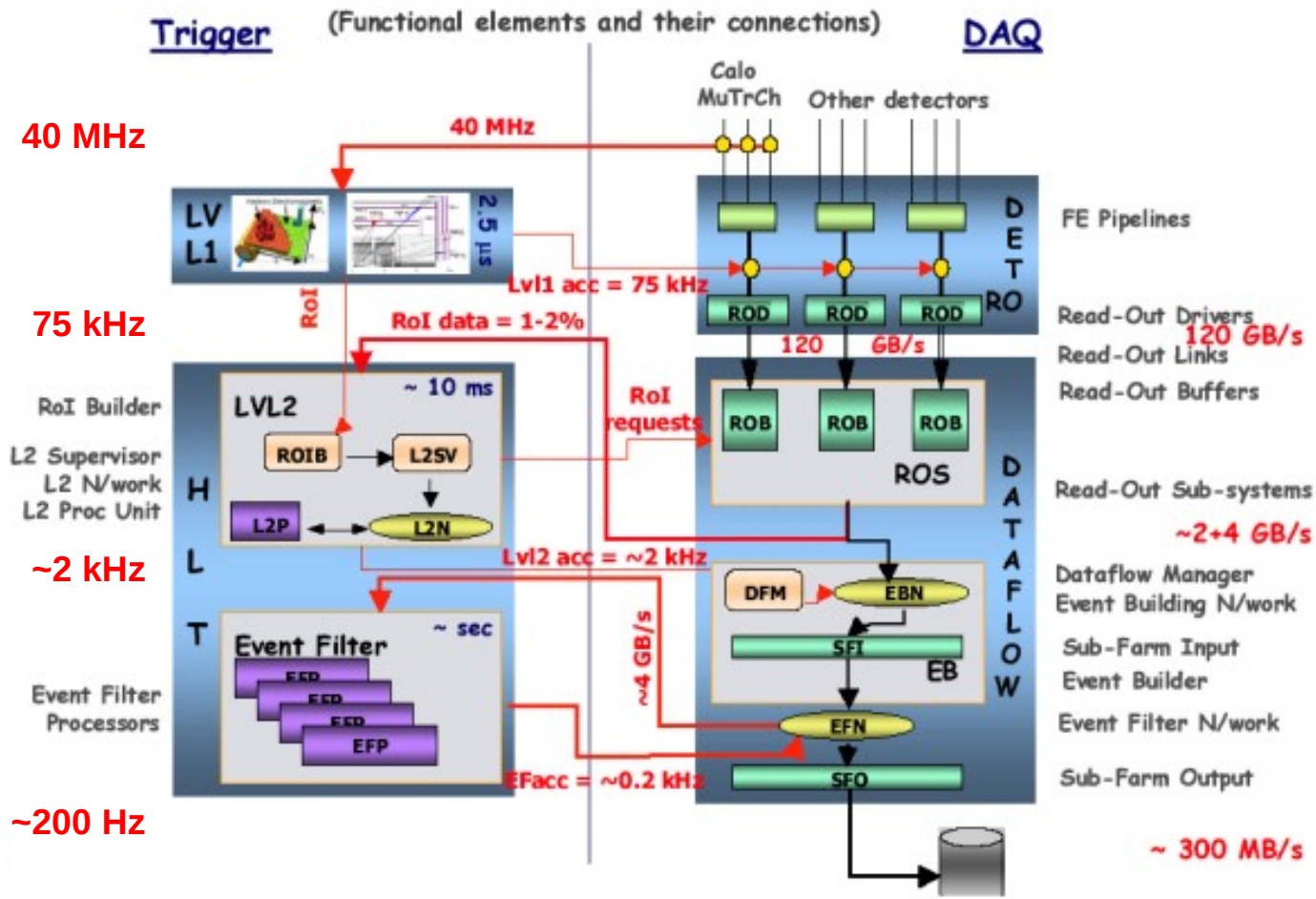

Challenges

- $L = 10^{34}$ cm^{-2} s^{-1} ⇒ stringent Trigger/DAQ requirements
- TDAQ design depends on: machine/detector/physics decisions
- Planning often less advanced than other Upgrade areas

Overview: Phases

Phase 1 (2018 shutdown)

- FTK see talk by Mel Shochet
- L1Calo topological triggering
- L1Muon deal with Small Wheel (forward) replacement
- HLT dataflow evolution; readout changes

Phase 2 (will not discuss these further)

- LVL1 major overhaul (Latency, L1Muon, L1Track, ...)
- HLT continued evolution: increased data rates/volume
  - nb: Distinction between phases is rather fuzzy

Simulation

- justify physics case and quantify performance
- produce realistic rates/efficiencies for design/evaluatio

L1Calo: Motivation

L1Calo challenged as Luminosity exceeds 10^{34} cm^{-2} s^{-1}

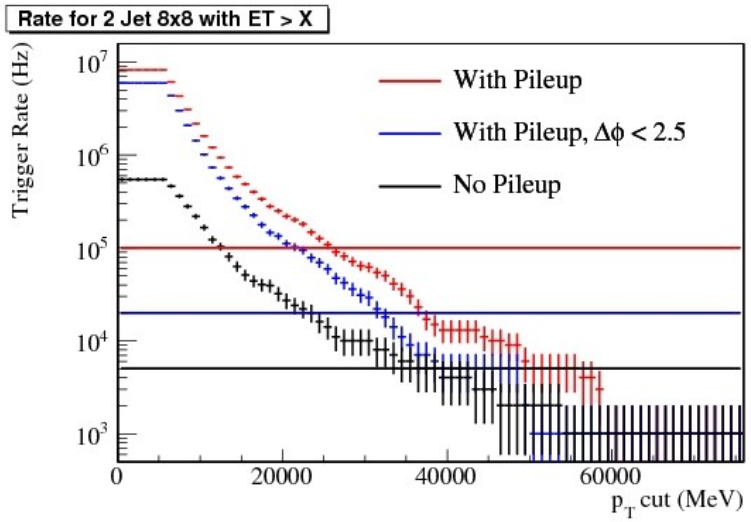

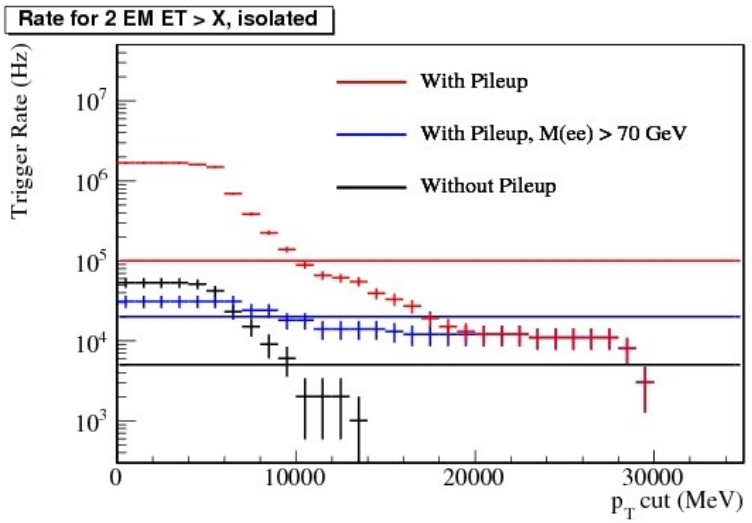

Topological triggers help

$L = 10^{34}$	2-jet: E_T > 35 GeV	+ ΔΦ < 2.5
Rate	35 kHz	9 kHz

Modifications required

- more data from processing modules
- modified data merging
- Topological Processor

See Larry's talk for discussion of effects of Calorimeter electronics replacement on Trigger System

L1Calo: Architecture

Staged Implementation

yellow – Existing system

gold – 40 → 160 MHz bus speed
- > only firmware
- > feasibility tested in 2009

cyan – CMM → CMM++
- > new hard/firmware
- > drop-in replacement

US Responsibility

green – Topological Processor
- > new hard/firmware
- > new CTP input

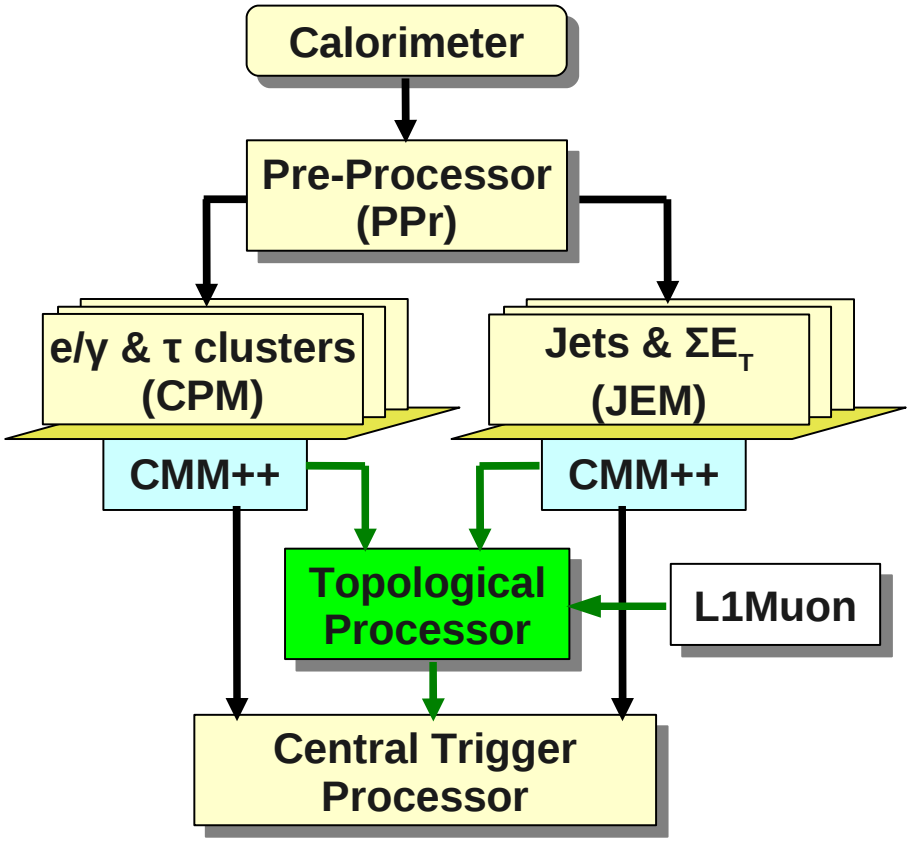

L1Calo: Schedule

1/11 – 6/11	CMM++ Project Specification
7/11 – 1/12	Engineering Specification
2/12 – 9/12	Detailed Layout
10/12 – 1/13	Prototype Fabrication, Powerup/Functionality Tests
2/13 – 7/13	Depth Testing / Installation / Commissioning
8/13 – 12/13	Final Fabrication, Powerup/Functionality Tests
1/14 – 6/14	Depth Testing / Installation / Commissioning

Other Projects involving MSU (not included in the above)

- physics simulation
- high-level algorithm design
- test stand specification/construction at CERN and MSU

Hardware Coordination (under Sam Silverstein - Stockholm)

- firmware interfaces with CTP, TP, upstream boards feeding CMM++
- reviews of: specifications, layout, production plans

More detailed Schedule: April, 2011

HLT/DAQ: Motivation

Data Rate and Volume

- improve data transmission
- replace bottlenecks
  - > e.g. ROS's
- new software

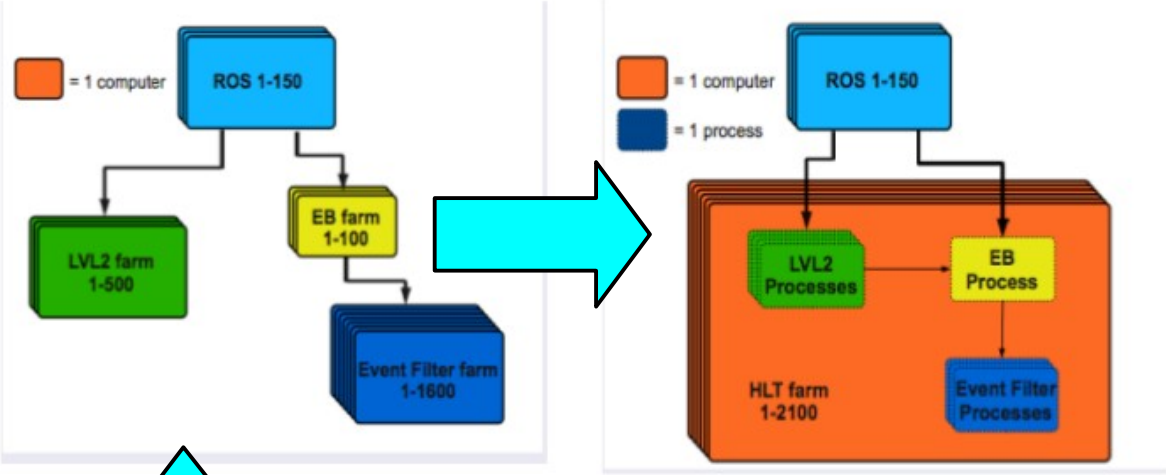

Consolidation

- L2 and EF proc's on same CPU
  - > dynamic load balancing
- merge ROIB and L2Supervisor
- move to Telecom standards
  - > replace piecewise ROD/ROS system in a transparent way

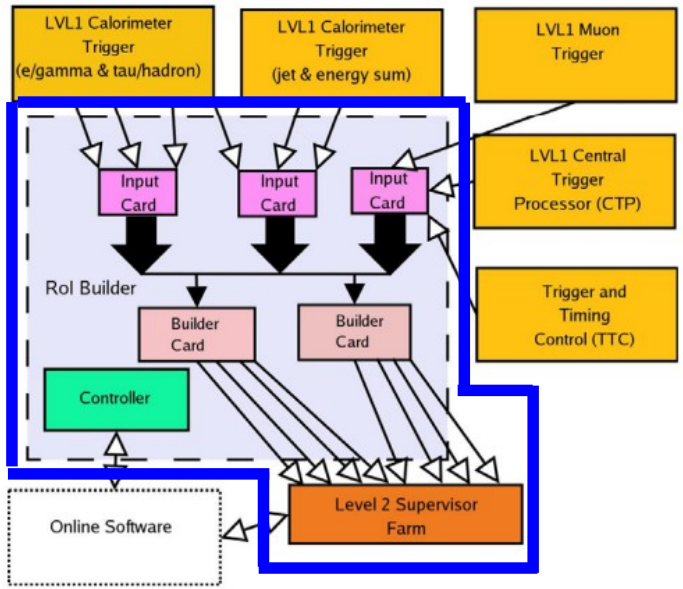

Support Phase 1 Changes

- readout for new systems
  - > IBL, Forward Muon, FTK,.....

HLT/DAQ: Readout Evolution

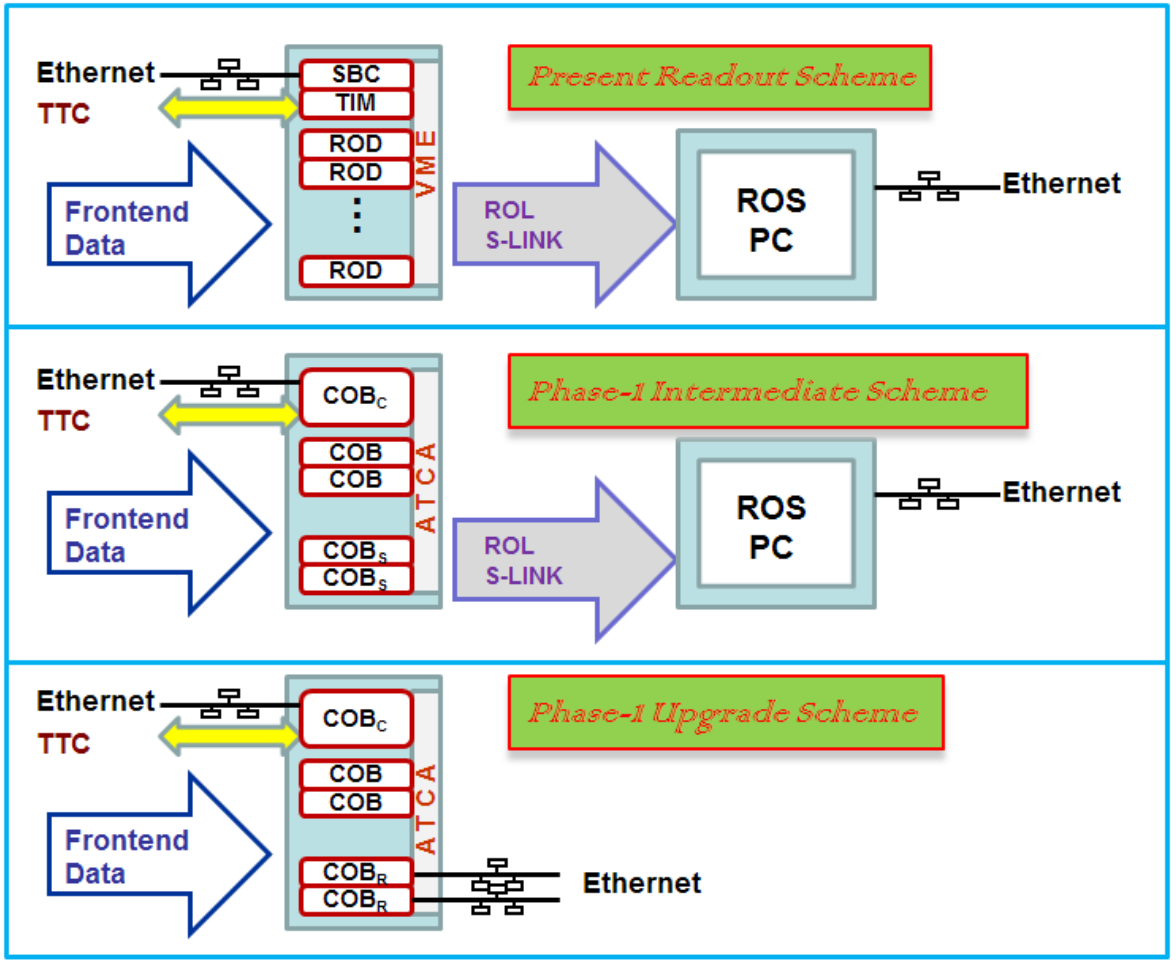

ROD/ROS on VME

RCE/CI on ATCA

RCE = Reconfigurable Cluster Element, CI = Cluster Interconnect
ATCA = Advanced Telecommunications Computing Architecture

TDAQ & Forward Muons

Forward Muon Upgrade is primarily a Trigger Issue

- precision chambers up against rate limit at nominal luminosity
- resolution in CSCs is degraded because of only 4 layers
  - c.f. 8 in the MDTs
  - ~96% fake rate in forward muon triggers at LVL1

see Vinnie's talk for more details

Any changes/additions here require new readout hardware

- should use “long term” readout solution here

Phase 2 Issue...

- Level-1 muon trigger rates start to become insensitive to thresholds

Construction Funding Profile

TDAQ UPGRADE: WBS 4.6 AY k$

Schedule			FY13	FY14	FY15	FY16	FY17	FY18	Total
L1Calo	CMM++	labor	200	200	200	200	200	200	1200
		M&S	50	100					150
Muon TDAQ		labor	105	125	125	125	125	125	730
		M&S	0	0	50	50	100	100	300
HLT/DAQ	ROIB/L2/EF	labor	151	101	101	70	50	50	523
		M&S	8	8	8	15			39
	RCE/ATCA	labor	350	350	250	250	300	300	1800
		IBL	50	124.5					224.5
		Pixels			45.5	100	200	300	645.5
		Muon			24.5	25	25	50	124.5

Note

- does not include items covered in Calorimeter and Muon presentations

...by Institute

TDAQ UPGRADE: WBS 4.6 AY k$

CONSTRUCTION BY INSTITUTE			FY13	FY14	FY15	FY16	FY17	FY18	Total
Institute	Project		AY k$						
MSU	L1Calo	labor	200	200	200	200	200	200	1200
		M&S	50	100					150
Boston	Muon	labor	75	75	75	75	75	75	450
		M&S			50	50	100	100	300
Harvard	Muon	labor	30	50	50	50	50	50	280
Argonne	ROIB	labor	101	51	51	20			223
		M&S	8	8	8	15			39
UCI	L2/EF	labor	50	50	50	50	50	50	300
SLAC	RCE/ATCA	labor	350	350	250	250	300	300	1800
		IBL	50	124.5					174.5
		Pixels			45.5	100	200	300	645.5
		Muon			24.5	25	25	50	124.5
TOTALS			914	1008.5	804	835	1000	1125	

Conclusions

Trigger/DAQ modifications necessary at all stages of upgrade

- new functionality to increase flexibility at $L = 10^{34}$ and above
- standardized components to facilitate commissioning/maintenance...

Main TDAQ Components through Phase 1 (US involvement)

- L1Calo: CMM++ element of topological trigger
- L1Muon: incorporate new small wheel chambers
- HLT/DAQ: consolidation of functionality & readout for new systems

Simulation is critical

- many requests for dedicated upgrade simulation support