Luminosity monitor upgrade

- fast readout IR6 & IR8
- ZDC installation for AnDY (IR2)
- SMD installation in IR2

Fast ZDC signal Readout

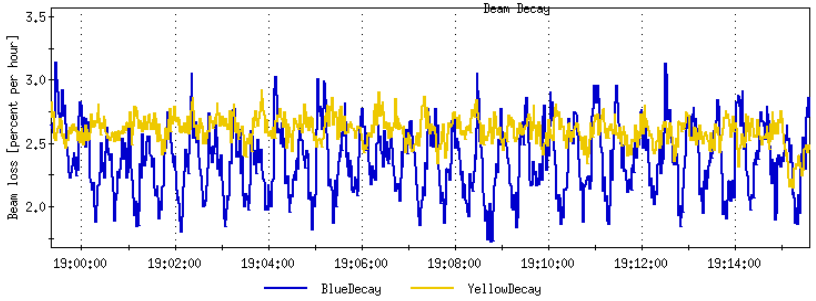

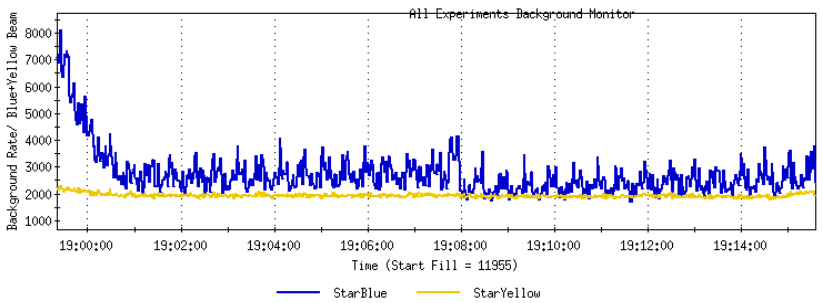

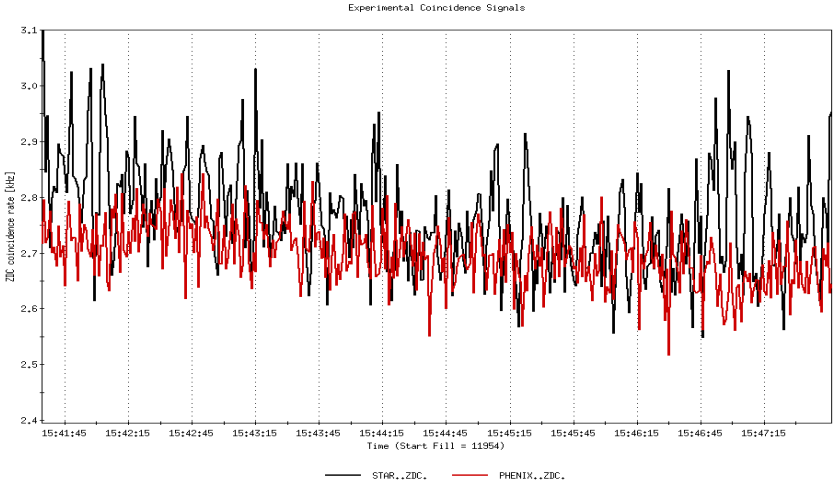

- Visible structure (~0.03 Hz) in beam decay, exp. Background (top) and collision signals (bottom), here from run10
- Current readout is 1 Hz only
- Need sub-Hz readout to look for any 10 Hz (or else) correlations
- Several options:
  - entire scaler board at 60 Hz as is: 80% CPU load
  - Using different S/W at 60 Hz, needs dedicated scaler: 30% CPU load (all chn.)
  - Using same S/W (dedicated scaler board), up to 4 chn. with 720 Hz: 30% CPU load

720 Hz readout

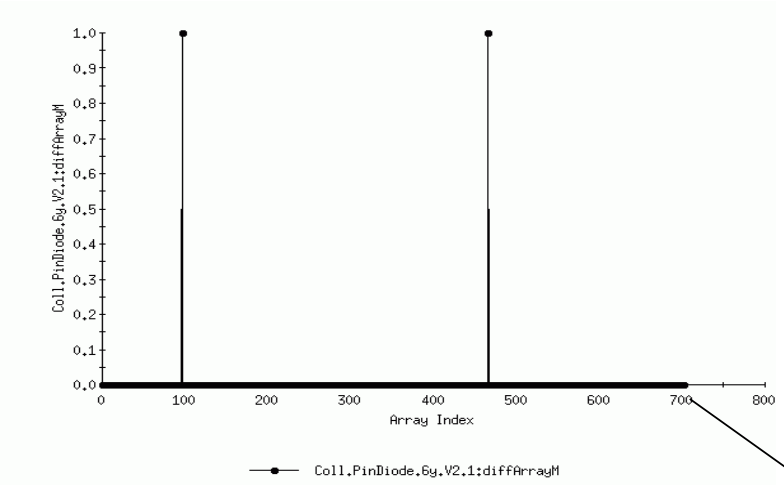

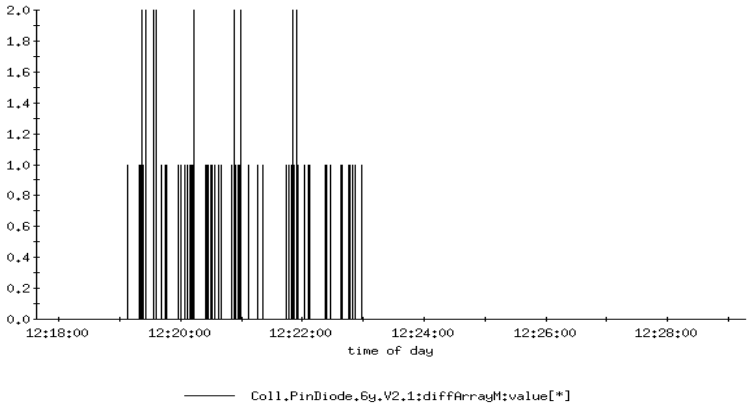

- 720 Hz array snapshot (top)
- 720 Hz readout stripchart (bottom)
- Max. of 4 channels (to maintain acceptable CPU load)
- Status: 2 dedicated scaler boards ordered
- Problem (w. 720 Hz only):

Not 720 (?!)

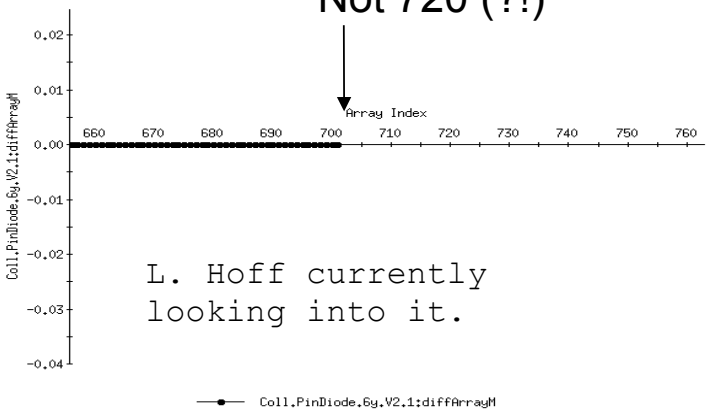

L. Hoff currently looking into it.

ZDC installation at IR2

* Plan:

- Move IR2 ZDCs to STAR (done)
- Remove IR6 ZDCs incl. PMTs from tunnel and transport to 923 (done)
- Test ZDCs and PMTs (LED system) in lab and install in tunnel (sec1 and sec2): in progress
- Leave IR10 in place for future use in IR10 (or spare ;))
- Share analog signals with experiment (split signals)
- Readout ZDCs from 1002B (cables are pulled)
    - Analog (needs ADC and TDC, ordered, plus dedicated S/W, use existing NSRL S/W)
    - Digital (“counting mode”, system as known, needs NIM crate, scaler board, V124 etc., all in place)

ZDC readout scheme

Starting with pp rather than HI is not optimal for initial ZDC setup.

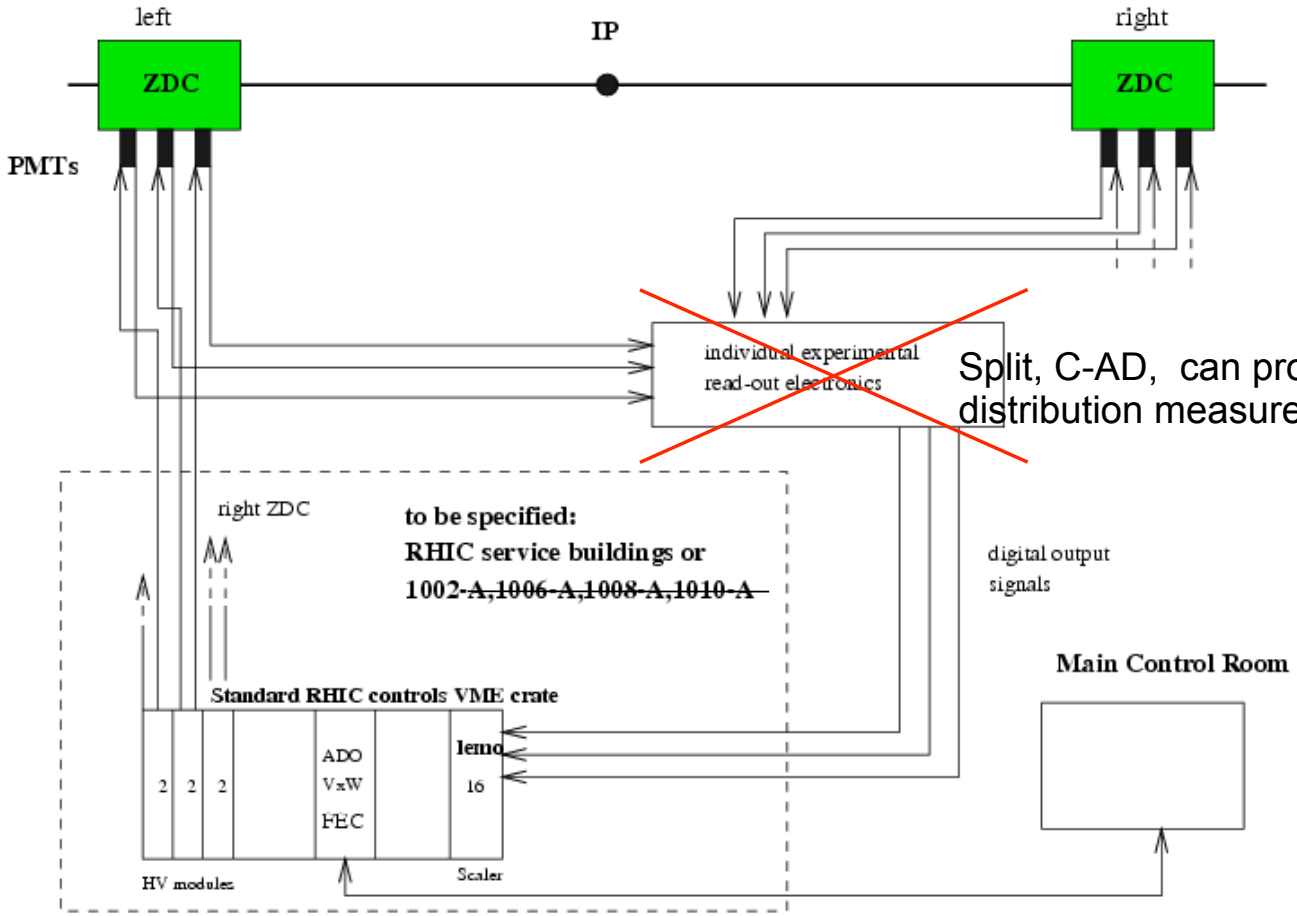

Split, C-AD, can provide vertex distribution measurement

ADO S/W for TDC and ADC already developed, dedicated analysis software exists (courtesy NSRL)

AnDY Run11 installation in IR2

Run-11 Configuration/Goals

Picture courtesy AnDY

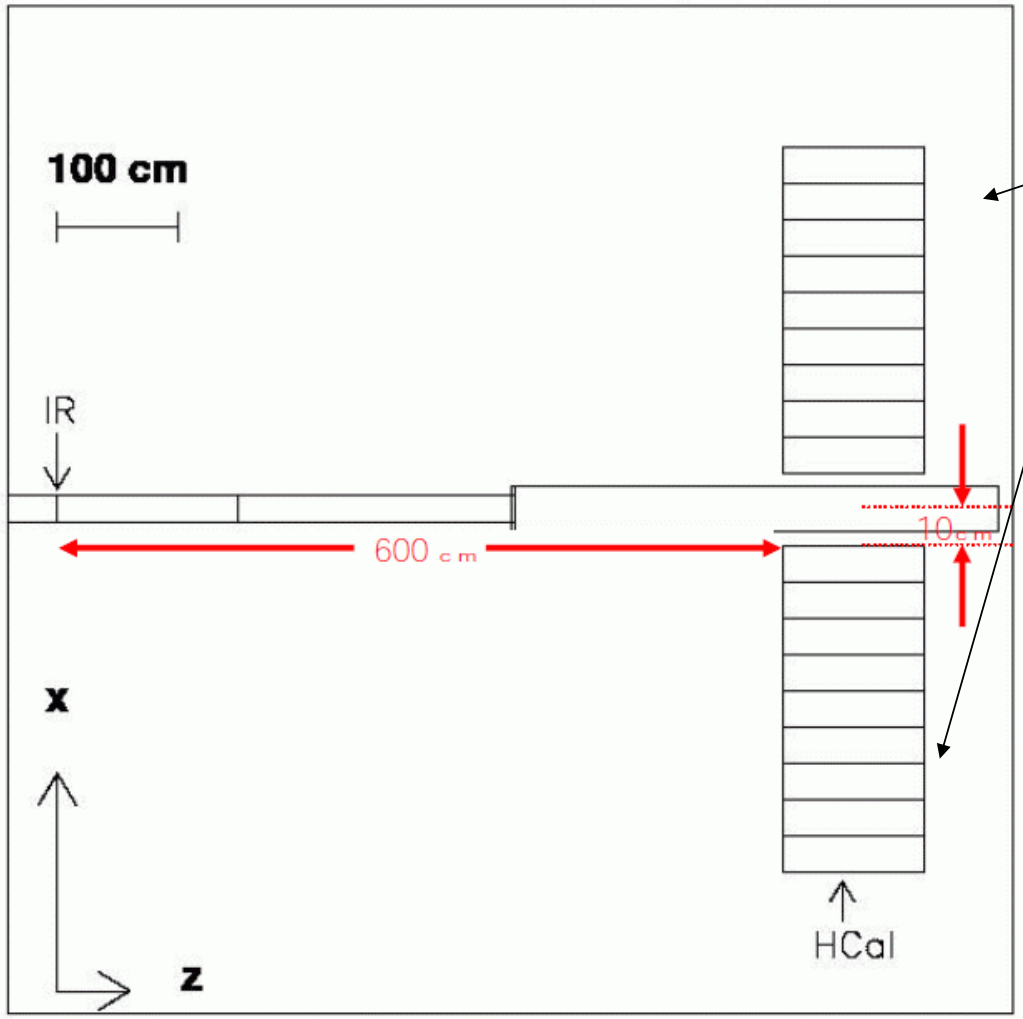

"GEANT view" Note transverse/longitudinal scale

Detectors to stage

- HCal: two 9x12 modules from E864 (NIM 406, 227)
- BBC and ZDC (not shown)

Goals for run 11

- Establish impact of 3IR operation on PHENIX/STAR
- Calibrate absolute energy scale of HCal
- Measure hadronic background to benchmark simulations

APEX

* Establish impact of 3 IR operation:

There is likely very little extra time needed since it's in AnDY's interest to figure this out and run with as little impact on STAR and PHENIX luminosity lifetime as possible.

Min. 'useful' time for polarisation measurement could be different from exp.

* While colliding in IR2:

- long. vertex distribution
- Local polarisation, possibly bunch-by-bunch

Add SMD to ZDC

(shower max detector, aka “local polarimeter”)

- Need:
  - 4 10x10 cm scintillators (in hand)
  - 4 MA PMTs (in hand)
  - WLS fibers (partly in hand)
  - HV: from exp.
  - Installation frame (design in progress, G. Mahler)
  - Readout (and analysis) -> AnDY + C-AD
    - Readout will be 'stand-alone'
    - Shared with experiment

SMD detector layout within ZDCs at PHENIX (as an example!!)

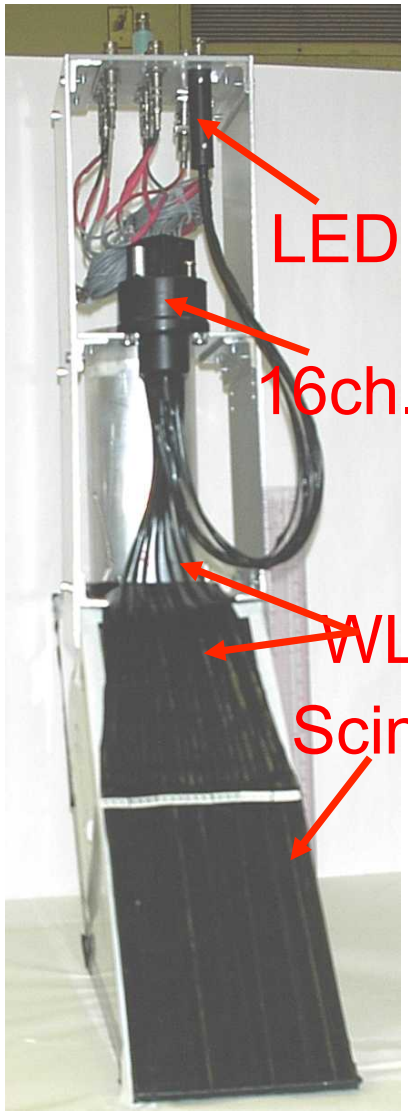

PHENIX
(Picture courtesy PHENIX)

IR2 →

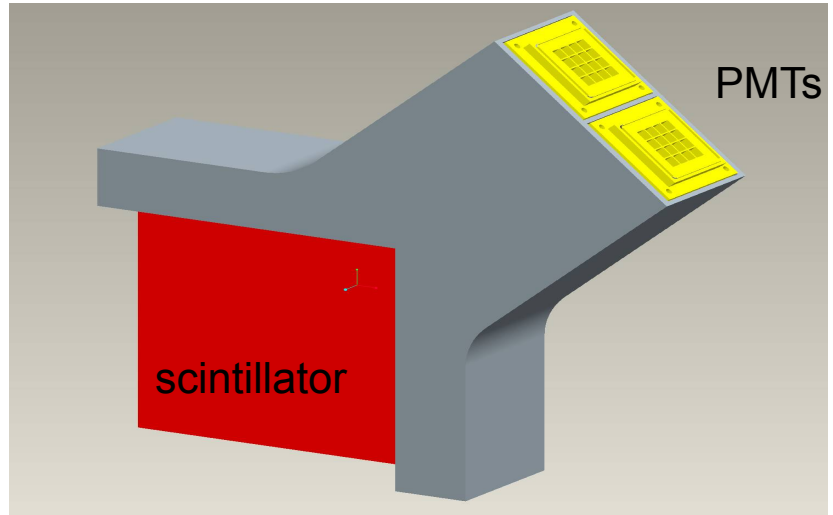

- Active area of SMD
  - ✓ Approx 10 cm x 10 cm (horizontal · vertical)
  - ✓ 20x20 bins in (x, y) space (x2 more than PHENIX)
- Position resolution
  - ✓ few mm

SMD installation in IR8

(picture courtesy PHENIX)

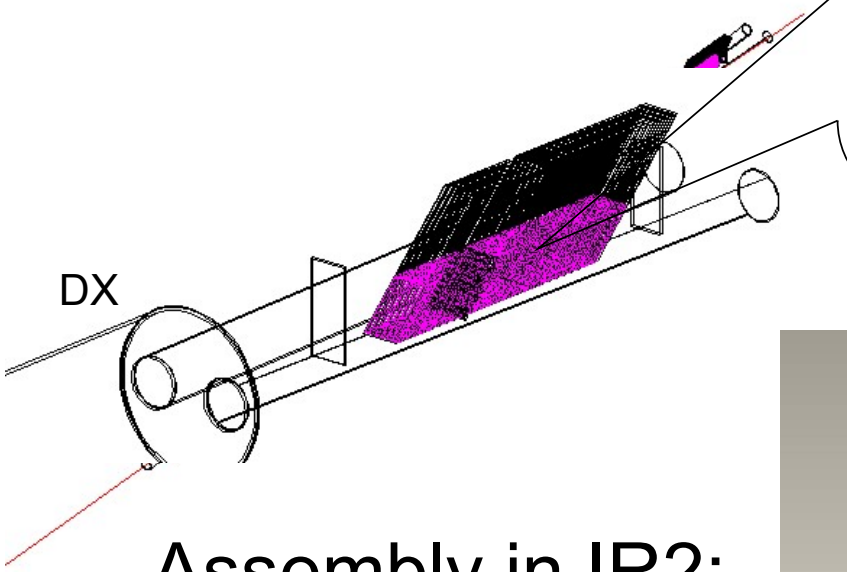

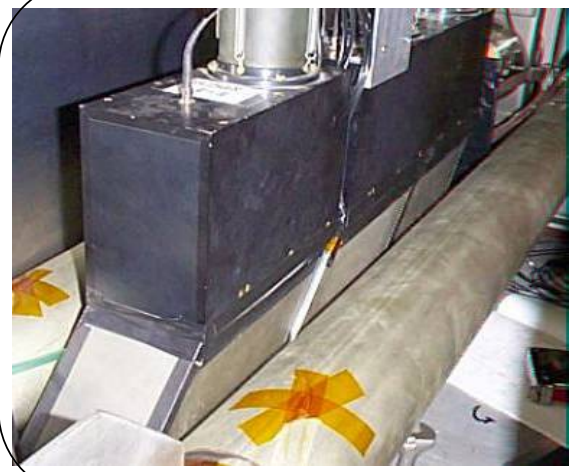

ZDC
(**Z**ero **D**egree **C**alorimeter)

10*10cm
→ ±2.8 mrad

3 modules
$150X_0$ $5.1\lambda_I$

Assembly in IR2:
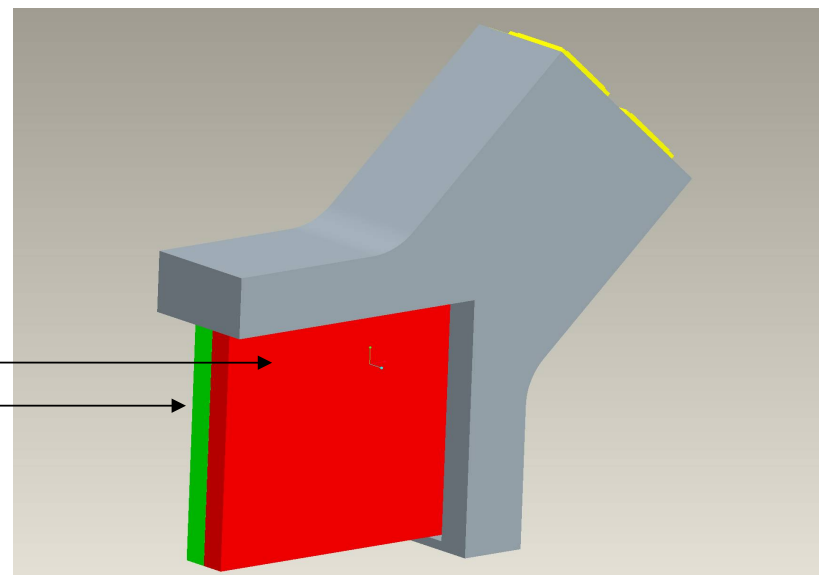
X-plane
y-plane