WBS 6.5: Muon Phase II Upgrade

Tom Schwarz
University of Michigan

US ATLAS Phase II Managers Meeting
May 20th, 2015

US Muon Deliverables for Phase II

Phase II requires the replacement of the front-end electronics for the MDT system

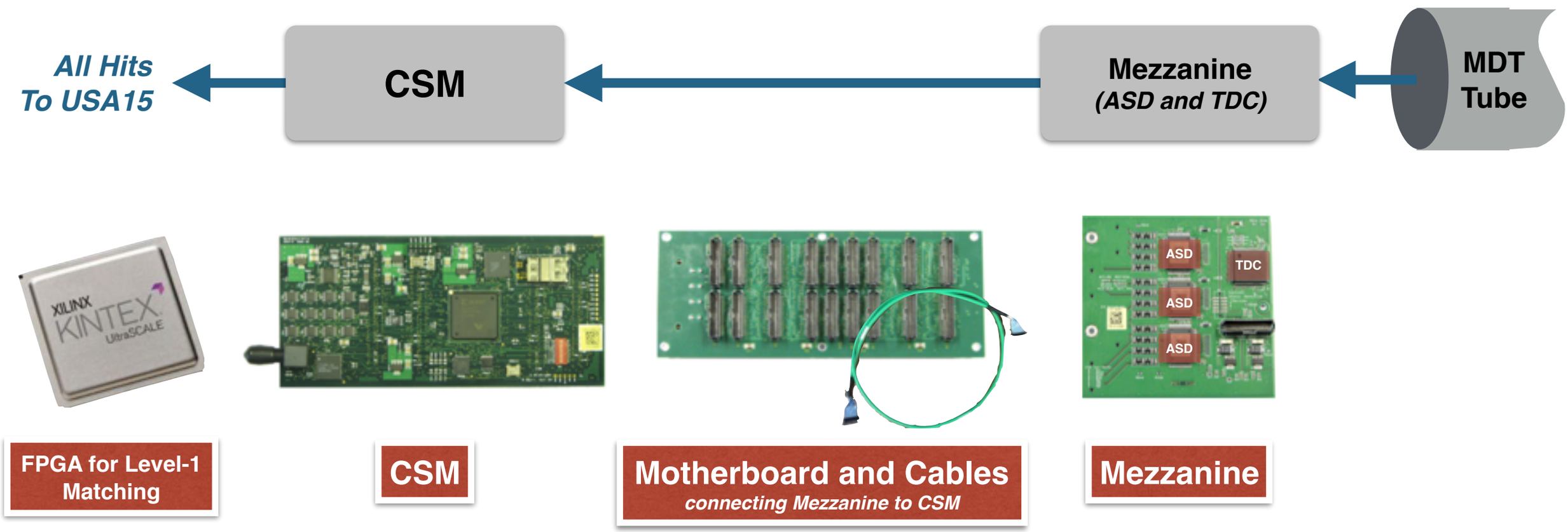

R&D Progress

- ➡ Full system-wide rate simulation in-place and currently being verified with in-house test stand
- ➡ Cable and motherboard tests nearly complete
- ➡ Looks very optimistic for trigger-less system
- ➡ System design choice can likely be made soon

Latency of the last 5000 hits passed through MDT system @ 200kHz/tube

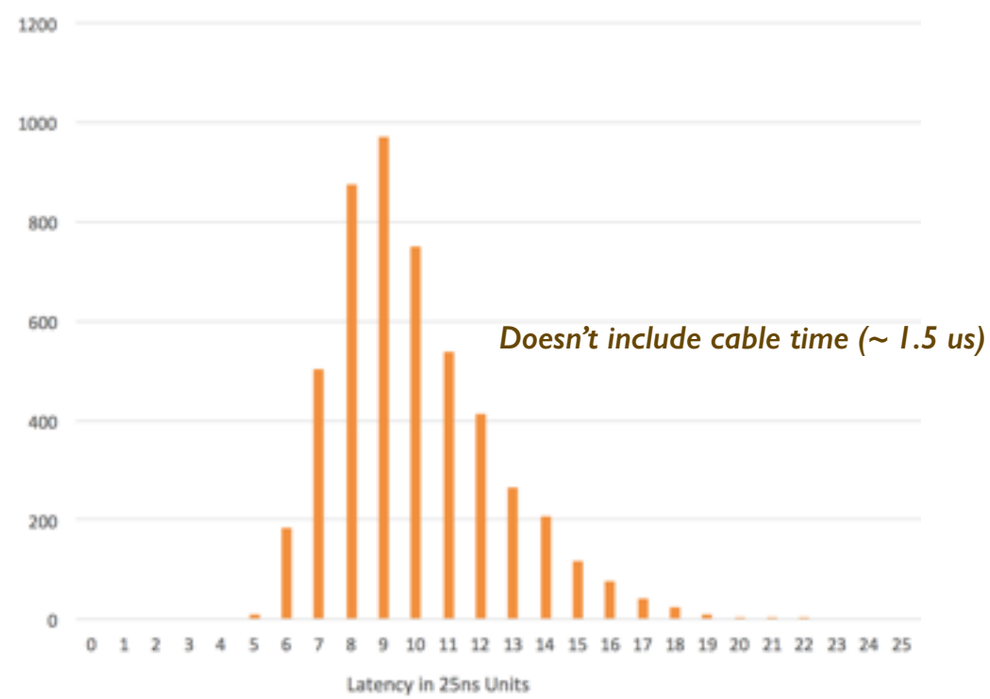

Eye Diagram for 1.3m of currently used cable @ 320 Mbps

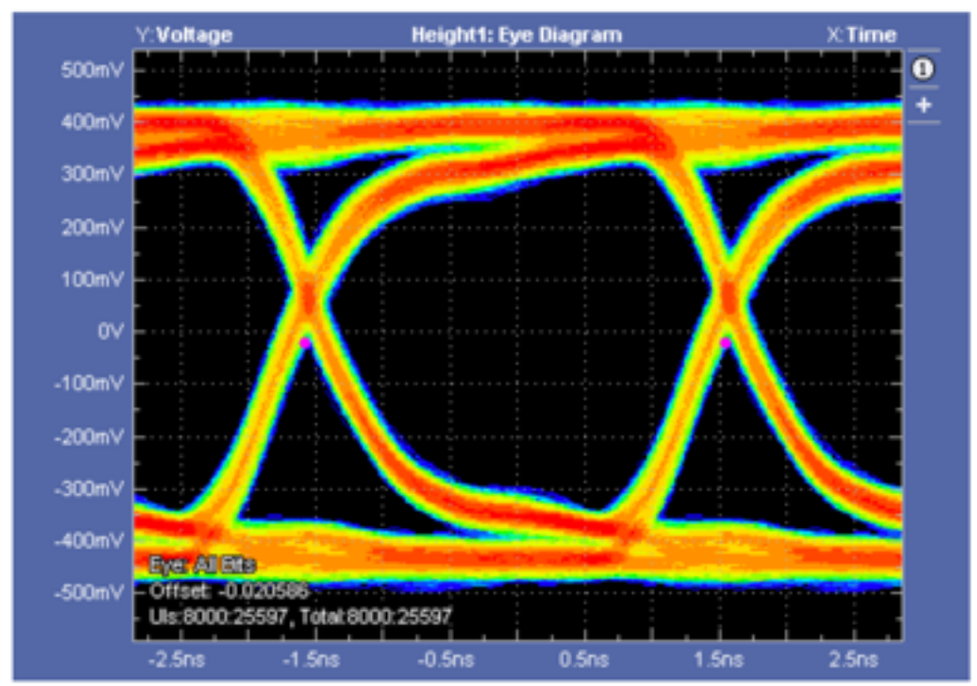

US Deliverables for Phase II

➡ Consolidated TDC/ASD work to align with the BNL VMM development

➡ Removed Motherboard/Cable replacement, anticipating that this will not be needed

Deliverable	WBS #
CSM Design/Construction	6.5.1
ASD/TDC Design/ Construction	6.5.2
Mezzanine Design and Assembly	6.5.3
FPGA to match hits for for Level 1 Trigger (@USA 15)	6.5.4

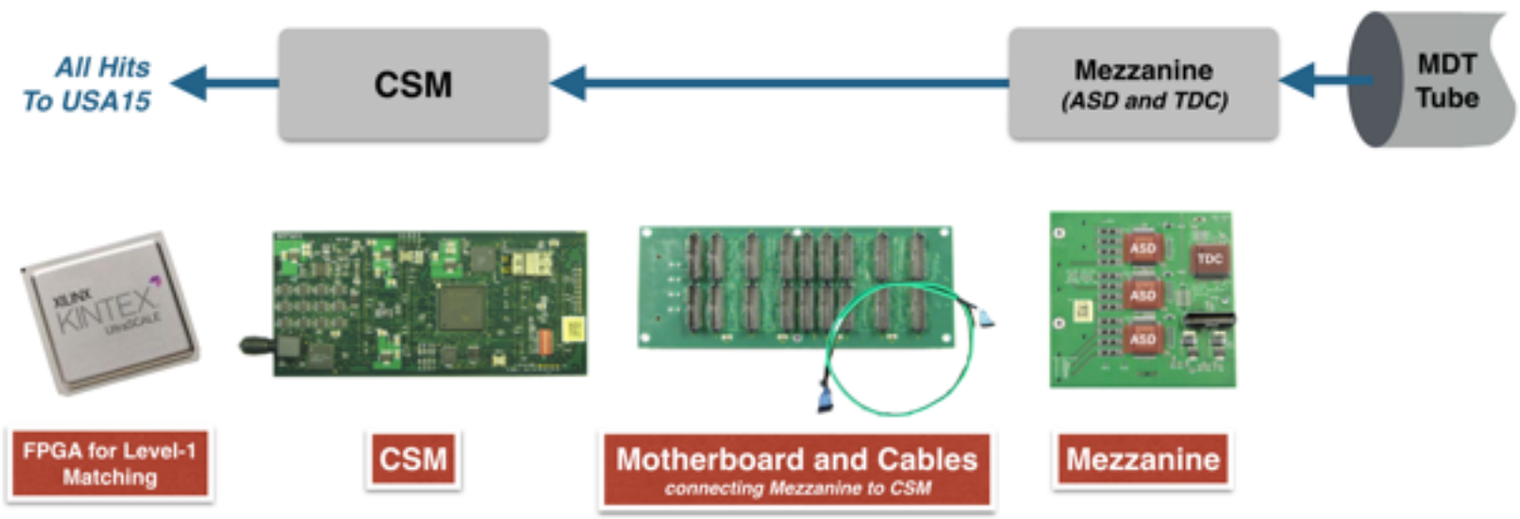

US Deliverables for Phase II in Muons

Deliverable	WBS #	US Institutions	Non-US	Active R&D	Construction Costs
CSM Design/Construction	6.5.1	Michigan		Yes	$3.25M
ASD/TDC Design/ Construction	6.5.2	BNL	CERN, Japan, MPI	Sort of…	
Mezzanine Design and Assembly	6.5.3	Arizona, Illinois		No	
FPGA to match hits for for Level 1 Trigger (@USA 15)	6.5.4	UClrvine, Illinois	Japan	No	

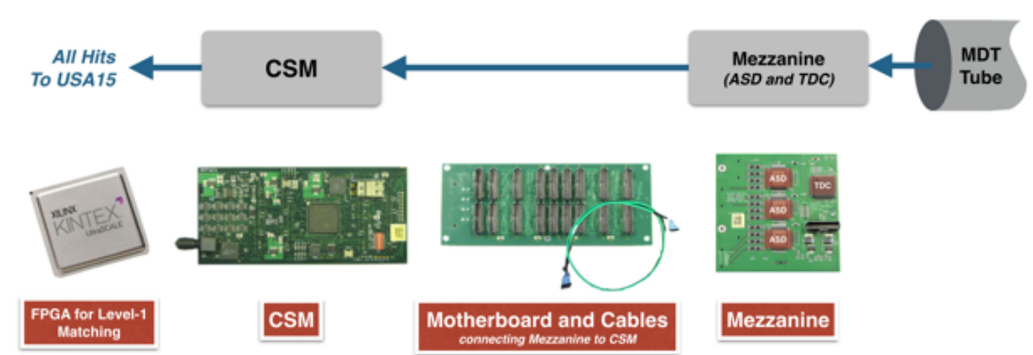

CSM Construction Costs

		FY18		FY19		FY20		FY21		FY22	
		%	$ / hr	%	$ / hr	%	$ / hr	%	$ / hr	%	$ / hr
Personnel Effort and $/hr	Sr. Engineer	0.5	$93.48	1.0	$96.28	1.0	$99.17	1.0	$102.15	0.5	$105.21
	Jr. Engineer	0.5	$57.90	1.0	$59.64	1.0	$61.43	1.0	$63.27	0.5	$65.17
	Elec. Technician	0.5	$56.85	1.0	$58.56	1.0	$60.31	1.0	$62.12	0.5	$63.99
	Elec. Student	0.5	$35.48	1.0	$36.54	1.0	$37.64	1.0	$38.77	0.5	$39.93
Costs	Total Personnel Cost	$216,414		$445,814		$459,188		$472,964		$243,576	
	Travel	$8,000		$8,000		$8,000		$8,000		$8,000	
	Prototypes/Fixtures			$35,000		$20,000					
	Final Production							$1,250,000			
	Shipping							$35,000			
	Total Cost	$224,414		$488,814		$487,188		$1,765,964		$251,576	
								Total		$3,217,957	

w/out Contingency

6.5	Muon Construction	2018	2019	2020	2021	2022	Planned Duration (Days)	Start	Finish	FTE	Travel	Material	US Institutes	Non-US Involvement
6.5.1	**CSM**						**1825**	10/1/17	9/30/22				**Michigan**	
6.5.1.1	**Design**						1460	10/1/17	9/30/21					
6.5.1.1.1	CSM v0						729	10/1/17	9/30/19					
6.5.1.1.1.1	Simulation						730	10/1/17	10/1/19					
6.5.1.1.1.2	Transceiver Firmware						730	10/2/17	10/2/19					
6.5.1.1.1.3	Multiplexing Firmware						730	10/3/17	10/3/19					
6.5.1.1.1.4	TTC/GBT						730	10/4/17	10/4/19					
6.5.1.1.1.5	Optoelectronics						730	10/5/17	10/5/19					
6.5.1.1.1.6	Power/Service						730	10/6/17	10/6/19					
6.5.1.1.1.7	PCB Board						730	10/7/17	10/7/19					
6.5.1.1.2	CSM v1						365	10/1/19	9/30/20					
6.5.1.1.3	CSM v2						364	10/1/20	9/30/21					
6.5.1.2	**Prototyping**						1095	10/1/18	9/30/21					
6.5.1.2.1	CSM v0						364	10/1/18	9/30/19					
6.5.1.2.1.1	Layout						364	10/1/18	9/30/19					
6.5.1.2.1.2	Simulation						364	10/1/18	9/30/19					
6.5.1.2.1.3	Fabrication						364	10/1/18	9/30/19					
6.5.1.2.1.4	Testing						364	10/1/18	9/30/19					
6.5.1.2.2	CSM v1						365	10/1/19	9/30/20					
6.5.1.2.3	CSM v2						364	10/1/20	9/30/21					
6.5.1.3	**Construction**						729	10/1/20	9/30/22					
6.5.1.3.1	Fabrication						729	10/1/20	9/30/22					
6.5.1.3.2	Assembly						364	10/1/20	9/30/21					
6.5.1.3.3	Testing						729	10/1/20	9/30/22					
6.5.2	**TDC/ASD**						**1825**	10/1/17	9/30/22				**BNL**	**CERN, Japan, MPI**
6.5.2.1	**Design**						1460	10/1/17	9/30/21					
6.5.2.1.1	TDC/ASD v0						729	10/1/17	9/30/19					
6.5.2.1.1.1	Simulation						729	10/1/17	9/30/19					
6.5.2.1.1.2	Specifications						729	10/1/17	9/30/19					
6.5.2.1.1	TDC/ASD v1						365	10/1/19	9/30/20					
6.5.2.1.2	TDC/ASD v2						364	10/1/20	9/30/21					
6.5.2.2	**Prototyping**						1095	10/1/18	9/30/21					
6.5.2.2.1	TDC/ASD v0						364	10/1/18	9/30/19					
6.5.2.2.1.1	Design						364	10/1/18	9/30/19					
6.5.2.2.1.2	Layout						364	10/1/18	9/30/19					
6.5.2.2.1.3	Simulation						364	10/1/18	9/30/19					
6.5.2.2.1.4	Fabrication						364	10/1/18	9/30/19					
6.5.2.2.1.5	Packaging						364	10/1/18	9/30/19					
6.5.2.2.1.6	Testing						364	10/1/18	9/30/19					
6.5.2.2.2	TDC/ASD v1						365	10/1/19	9/30/20					
6.5.2.2.3	TDC/ASD v2						364	10/1/20	9/30/21					
6.5.2.3	**Construction**						729	10/1/20	9/30/22					
6.5.2.3.1	Fabrication						729	10/1/20	9/30/22					
6.5.2.3.2	Packaging						729	10/1/20	9/30/22					
6.5.2.3.3	Test Fixture Design						729	10/1/20	9/30/22					
6.5.2.3.4	Testing						729	10/1/20	9/30/22					
6.5.3	**Mezzanine Board**						**1825**	10/1/17	9/30/22				**Arizona, Illinois**	
6.5.3.1	**Design**						**1460**	10/1/17	9/30/21					
6.5.3.1.1	Mezz Board v0						729	10/1/17	9/30/19					
6.5.3.1.1.1	Simulation						729	10/1/17	9/30/19					
6.5.3.1.1.2	Specifications						729	10/1/17	9/30/19					
6.5.3.1.2	Mezz Board v1						365	10/1/19	9/30/20					
6.5.3.1.3	Mezz Board v2						364	10/1/20	9/30/21					
6.5.3.2	**Prototyping**						1095	10/1/18	9/30/21					
6.5.3.2.1	Mezz Board v0						364	10/1/18	9/30/19					
6.5.3.2.1	Fabrication						364	10/1/18	9/30/19					
6.5.3.2.2	Assembly						364	10/1/18	9/30/19					
6.5.3.2.3	Testing						364	10/1/18	9/30/19					
6.5.3.2.2	Mezz Board v1						365	10/1/19	9/30/20					
6.5.3.2.3	Mezz Board v2						364	10/1/20	9/30/21					
6.5.3.3	**Construction**						729	10/1/20	9/30/22					
6.5.3.3.1	Fabrication						729	10/1/20	9/30/22					
6.5.3.3.2	Assembly						729	10/1/20	9/30/22					
6.5.3.3.3	Testing						729	10/1/20	9/30/22					
6.5.4	**Hit Extraction Board**						**1825**	10/1/17	9/30/22				**UC Irvine, Illinois**	**Japan**
6.5.4.1	**Design**						1460	10/1/17	9/30/21					
6.5.4.1.1	Hit Xtraction Board v0						729	10/1/17	9/30/19					
6.5.4.1.1.1	Simulation						729	10/1/17	9/30/19					
6.5.4.1.1.2	Specifications						729	10/1/17	9/30/19					
6.5.4.1.1.3	Firmware						729	10/1/17	9/30/19					
6.5.4.1.1.4	PCB Board						729	10/1/17	9/30/19					
6.5.4.1.2	Hit Xtraction Board v1						365	10/1/19	9/30/20					
6.5.4.1.3	Hit Xtraction Board v2						364	10/1/20	9/30/21					
6.5.4.2	**Prototyping**						1095	10/1/18	9/30/21					
6.5.4.2.1	Hit Xtraction Board v0						364	10/1/18	9/30/19					
6.5.4.2.1.1	Fabrication						364	10/1/18	9/30/19					
6.5.4.2.1.2	Assembly						364	10/1/18	9/30/19					
6.5.4.2.1.3	Testing						364	10/1/18	9/30/19					
6.5.4.2.2	Hit Xtraction Board v1						365	10/1/19	9/30/20					
6.5.4.2.3	Hit Xtraction Board v2						364	10/1/20	9/30/21					
6.5.4.3	**Construction**						729	10/1/20	9/30/22					
6.5.4.3.1	Fabrication						729	10/1/20	9/30/22					
6.5.4.3.2	Assembly						729	10/1/20	9/30/22					
6.5.4.3.3	Testing						729	10/1/20	9/30/22					

WBS Structure

6.5	Muon Construction
6.5.1	**CSM**
6.5.1.1	**Design**
6.5.1.1.1	CSM v0
6.5.1.1.1.1	Simulation
6.5.1.1.1.2	Transceiver Firmware
6.5.1.1.1.3	Multiplexing Firmware
6.5.1.1.1.4	TTC/GBT
6.5.1.1.1.5	Optoelectronics
6.5.1.1.1.6	Power/Service
6.5.1.1.1.7	PCB Board
6.5.1.1.2	CSM v1
6.5.1.1.3	CSM v2
6.5.1.2	**Prototyping**
6.5.1.2.1	CSM v0
6.5.1.2.1.1	Layout
6.5.1.2.1.2	Simulation
6.5.1.2.1.3	Fabrication
6.5.1.2.1.4	Testing
6.5.1.2.2	CSM v1
6.5.1.2.3	CSM v2
6.5.1.3	**Construction**
6.5.1.3.1	Fabrication
6.5.1.3.2	Assembly
6.5.1.3.3	Testing

Major deliverables at 6.5.X

Design, Prototyping, and Construction Stages for each deliverable at 6.5.X.X

WBS Structure

6.5	**Muon Construction**
6.5.1	**CSM**
6.5.1.1	**Design**
6.5.1.1.1	CSM v0
6.5.1.1.1.1	Simulation
6.5.1.1.1.2	Transceiver Firmware
6.5.1.1.1.3	Multiplexing Firmware
6.5.1.1.1.4	TTC/GBT
6.5.1.1.1.5	Optoelectronics
6.5.1.1.1.6	Power/Service
6.5.1.1.1.7	PCB Board
6.5.1.1.2	CSM v1
6.5.1.1.3	CSM v2
6.5.1.2	**Prototyping**
6.5.1.2.1	CSM v0
6.5.1.2.1.1	Layout
6.5.1.2.1.2	Simulation
6.5.1.2.1.3	Fabrication
6.5.1.2.1.4	Testing
6.5.1.2.2	CSM v1
6.5.1.2.3	CSM v2
6.5.1.3	**Construction**
6.5.1.3.1	Fabrication
6.5.1.3.2	Assembly
6.5.1.3.3	Testing

Deliverable Versions Under Development Stages

Any major development tasks under v0 deliverable

No listed major development tasks for each subsequent versions as the required work is unknown until after testing of v0, and generally shorter in duration

Summary

- ➡ Phase II interest is growing in US Muon community (NSW construction is dominating everyone's focus)
- ➡ Current "known" effort focuses on the CSM (costs have been estimated) though other US institutions are now discussing possible contributions
- ➡ <u>US Muon R&D at the system-level is very active</u>

Should I wait until other institutions are 'in' before creating cost estimates for each deliverable?
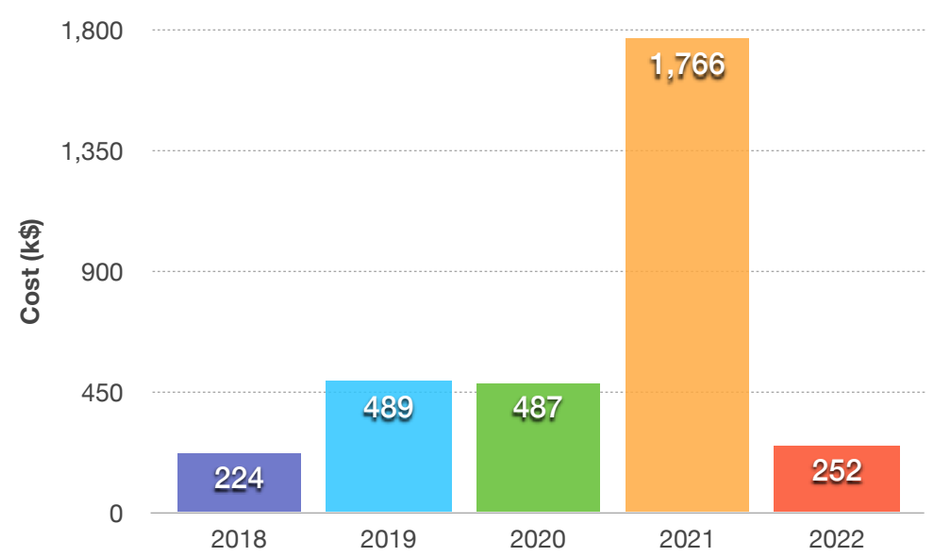
Deliverable	WBS #	US Institutions
CSM Design/Construction	6.5.1	Michigan
ASD/TDC Design/ Construction	6.5.2	BNL
Mezzanine Design and Assembly	6.5.3	Arizona, Illinois
FPGA to match hits for for Level 1 Trigger (@USA 15)	6.5.4	UCIrvine, Illinois