Performance of the Digital LLRF Systems for cERL at KEK

Feng QIU (KEK) June 10, 2015

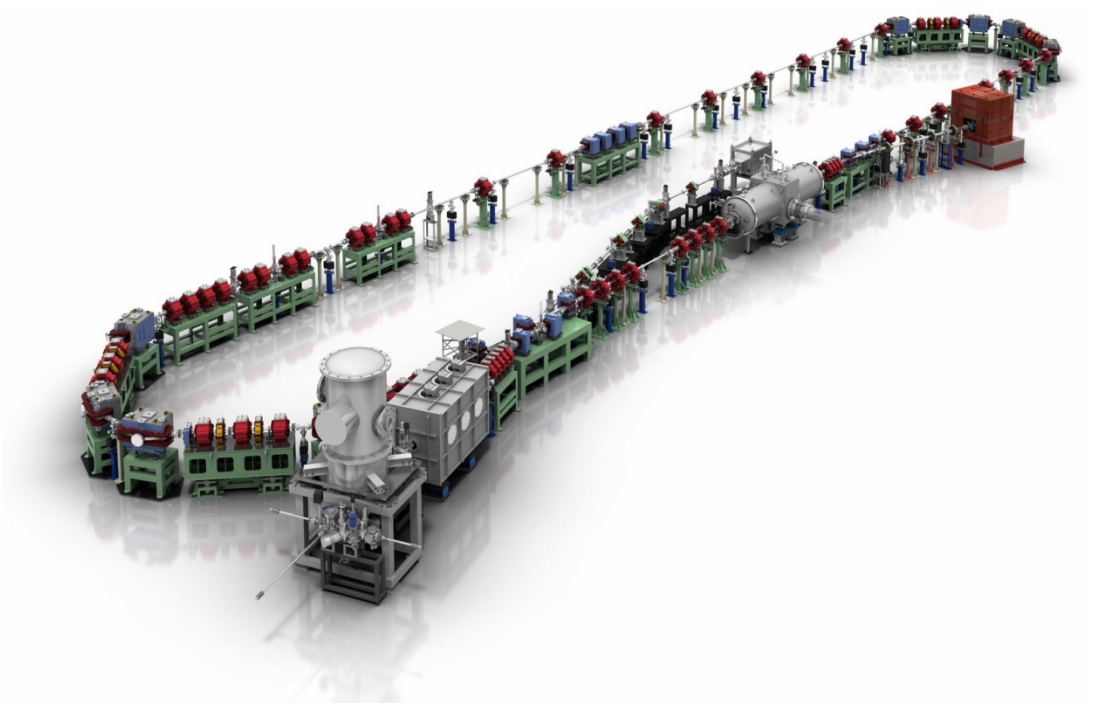

ERL2015, Stony Brook, NY USA. June 7-12, 2015

Main Content

- Introduction
- High Level RF system
- Low Level RF system
- Performance
- Disturbances in RF system
- Adaptive feedforward control
- Summary

Introduction

- Compact ERL (cERL) is a test facility for the future 3-GeV ERL project. It is a 1.3-GHz superconducting system and is operated in CW mode.

Injector consists of four cavities: Buncher (NC), Injector 1 (SC), Injector 2 (SC), Injector 3 (SC).

Main linac includes two nine-cell cavities (SC).

Layout of cERL

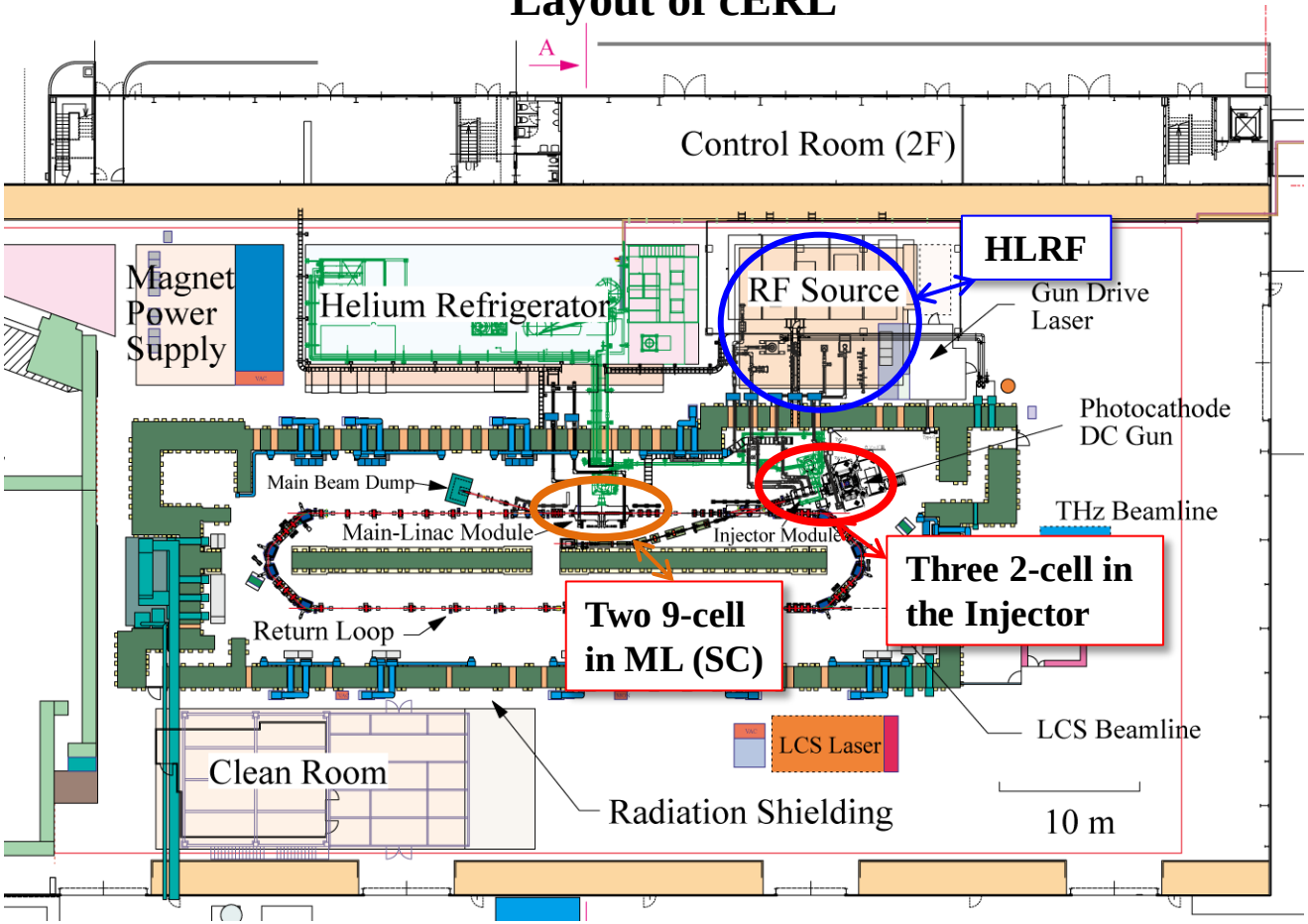

- April, 2013, injector commissioning. Oct. 2013, main linac commissioning.

HLRF (Power Source)

- At present, total four kinds of Power Sources are applied in cERL : 8-kW SSA, 16-kW SSA, 25-kW Klystron and 300 kW Klystron.

RF requirement

0.1 % rms, 0.1 deg. rms for cERL
0.01% rms, 0.01deg.rms for 3GeV-ERL

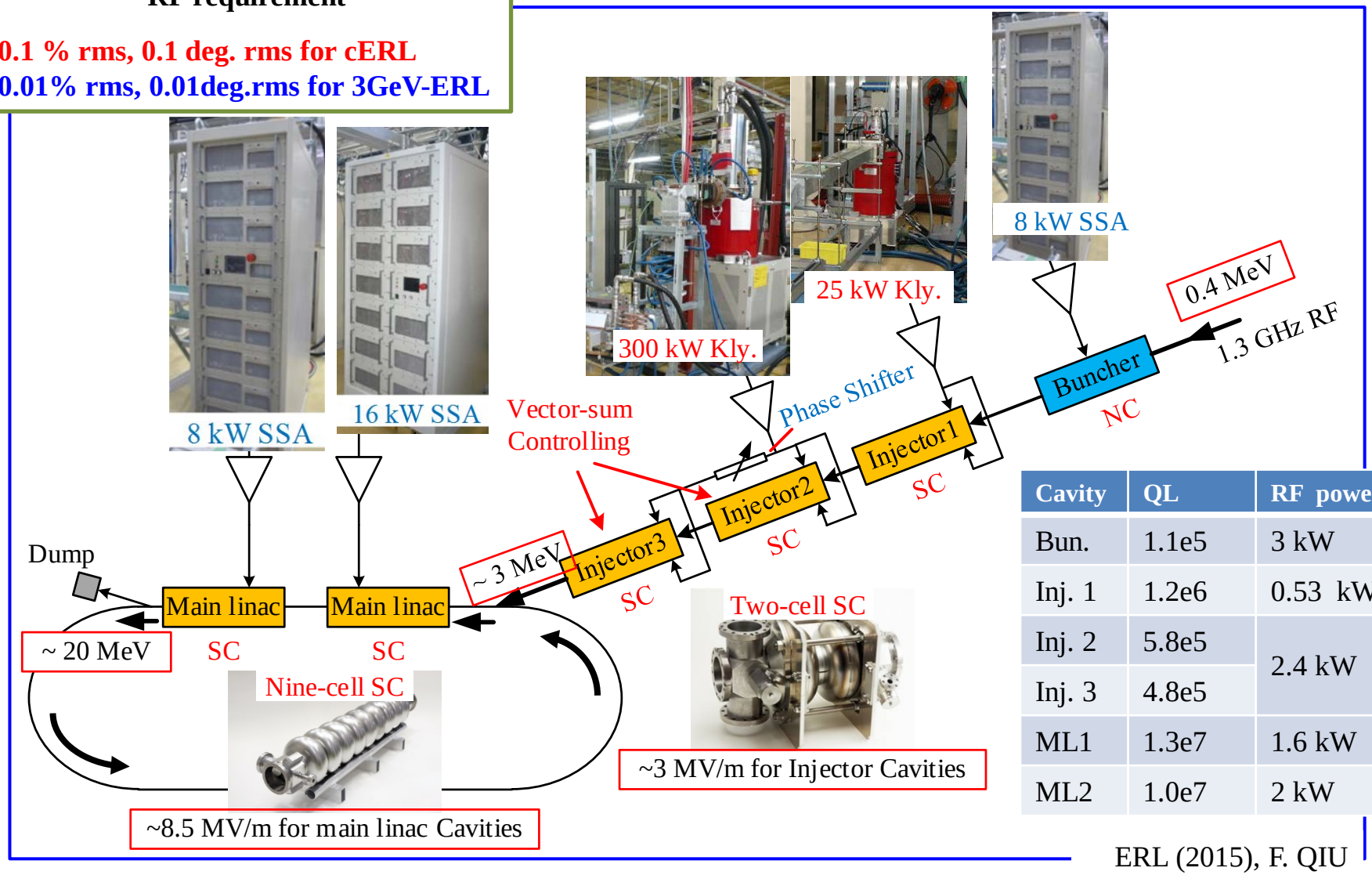

Cavity	QL	RF power
Bun.	1.1e5	3 kW
Inj. 1	1.2e6	0.53 kW
Inj. 2	5.8e5	2.4 kW
Inj. 3	4.8e5	
ML1	1.3e7	1.6 kW
ML2	1.0e7	2 kW

HLRF (Power Distribution System)

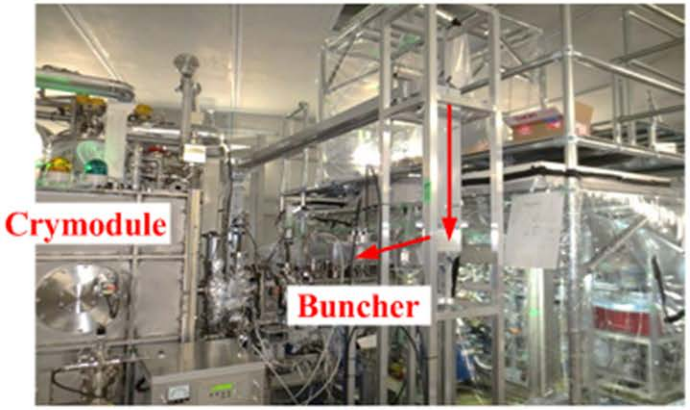

Rather narrow space and complicated waveguide.

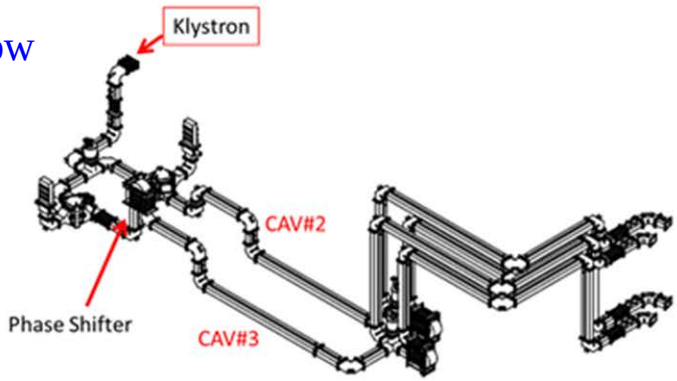

Inside shield

Outside shield

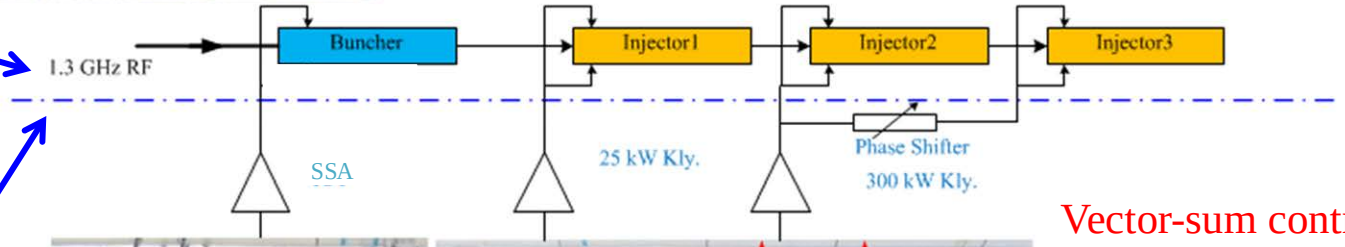

Vector-sum controlling for Inj.2 and Inj. 3.

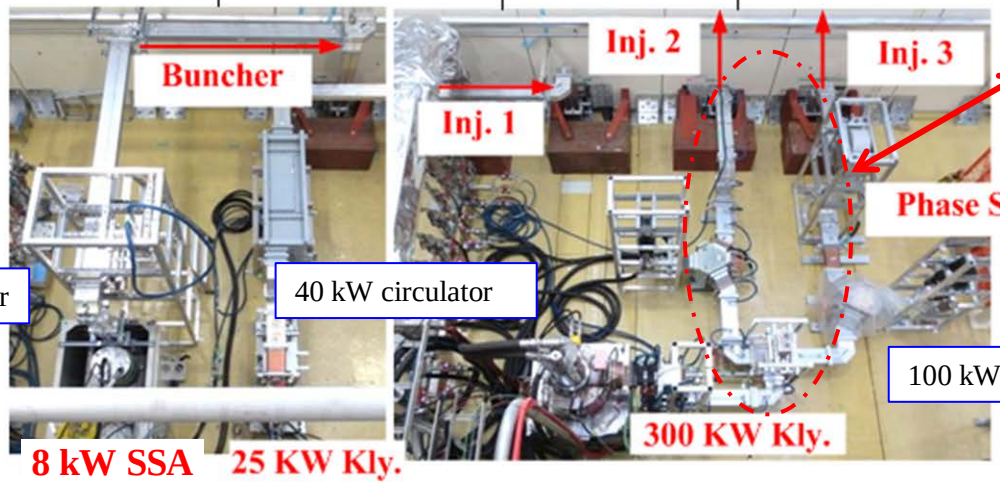

LLRF (Digital Board)

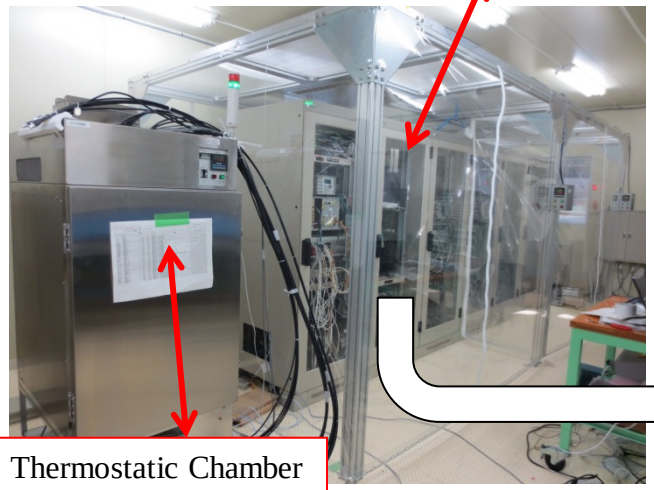

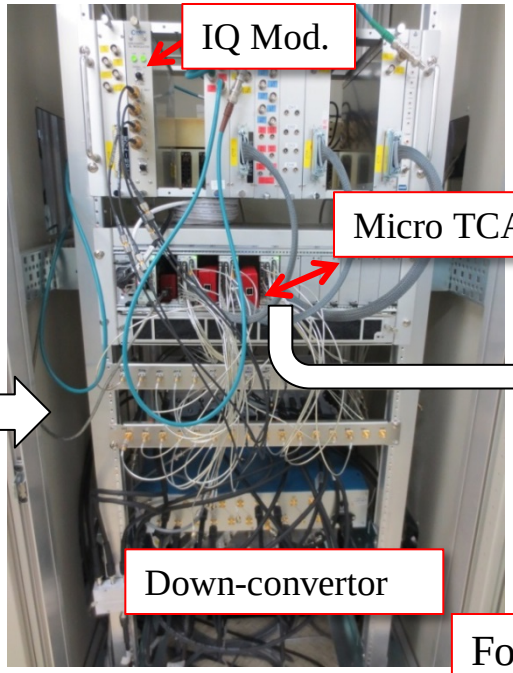

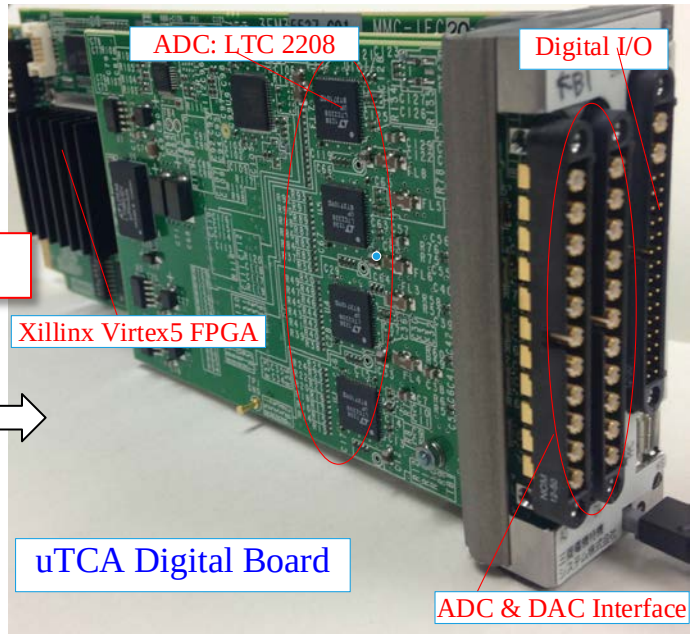

Four channel 16 bits ADCs + four channel 16 bits DACs.

Digital Board	type	Feature
ADC	LTC2208	16 bits, 130 MHz (Max.)
DAC	AD9783	16 bits, 500 MHz (Max.)
FPGA	Virtex 5 FX	550 MHz (Max.), includes a Power PC with Linux, EPICS is installed on the Linux.

LLRF (DAQ & communication)

- LLRF (Tuner + FB)
- EPICS (Experimental Physics and Industrial Control System) is installed inside Micro TCA and is used as the DAQ (data acquisition) system.
- CSS (Control System Studio) is in charge of the user interface programming.

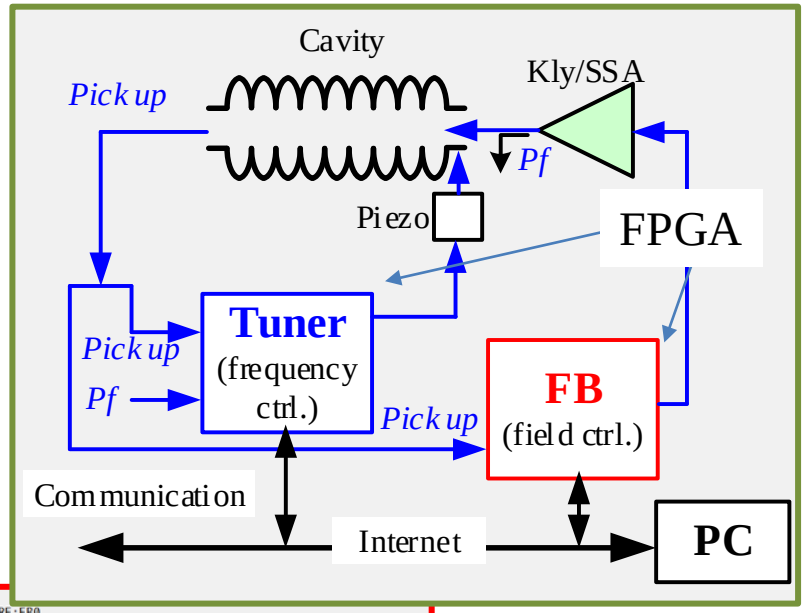

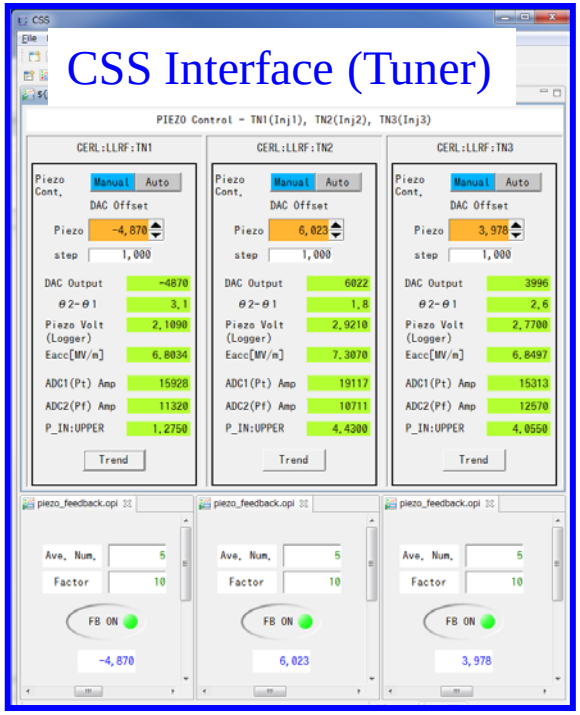

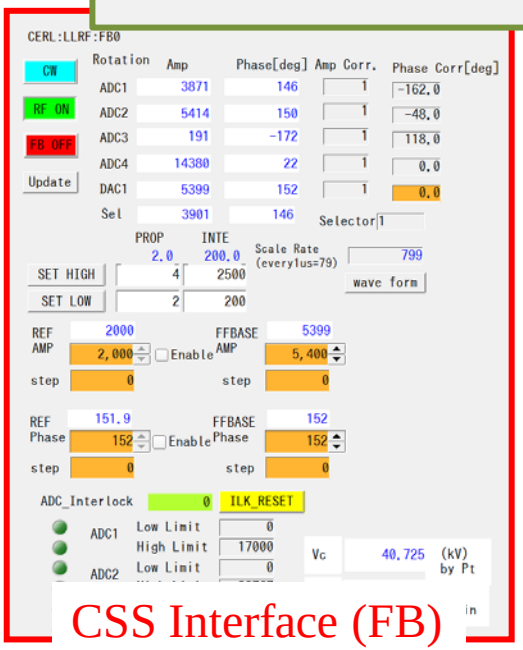

LLRF (frequency control)

- Cavity resonance frequency control: Tuner + Piezo.

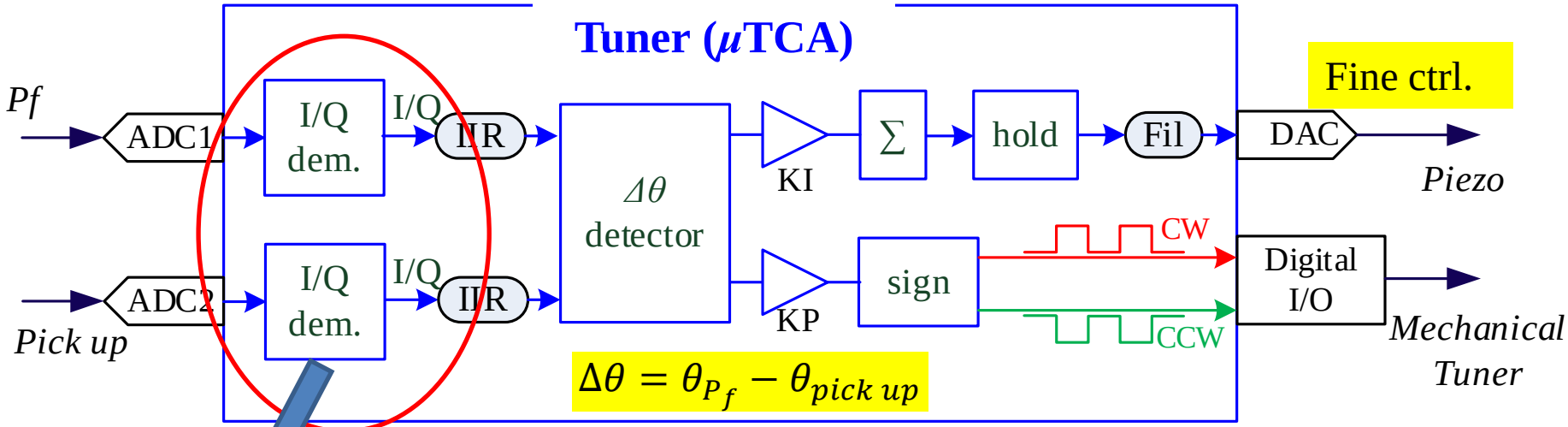

Coarse ctrl.

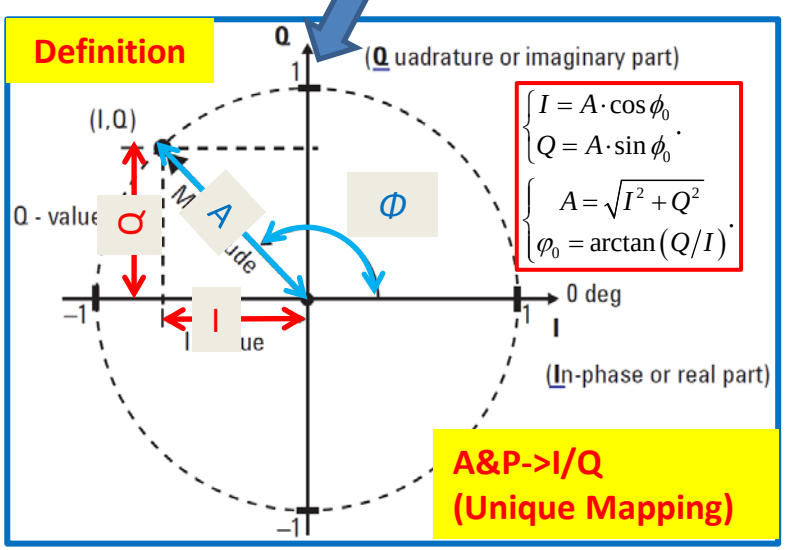

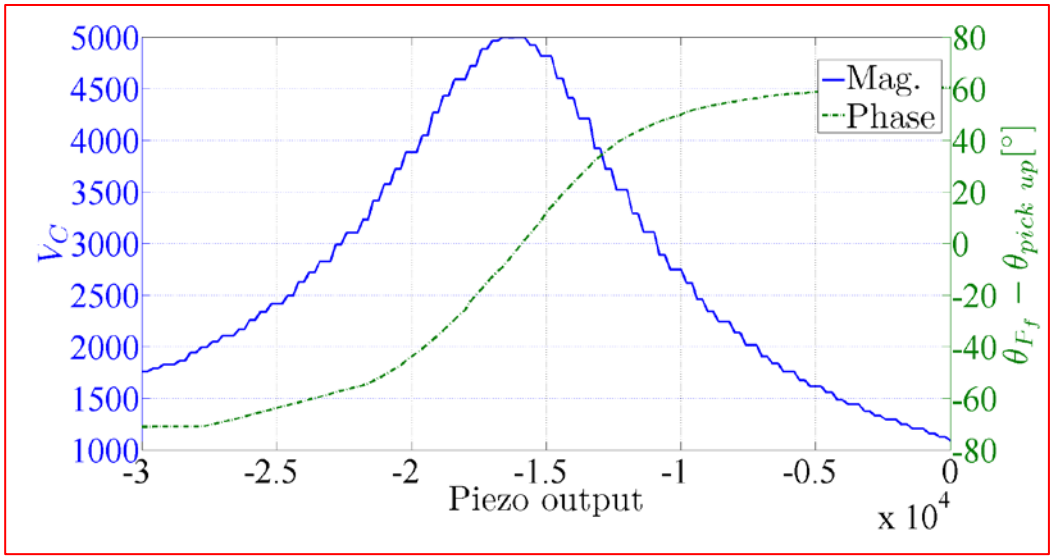

LLRF (field control)

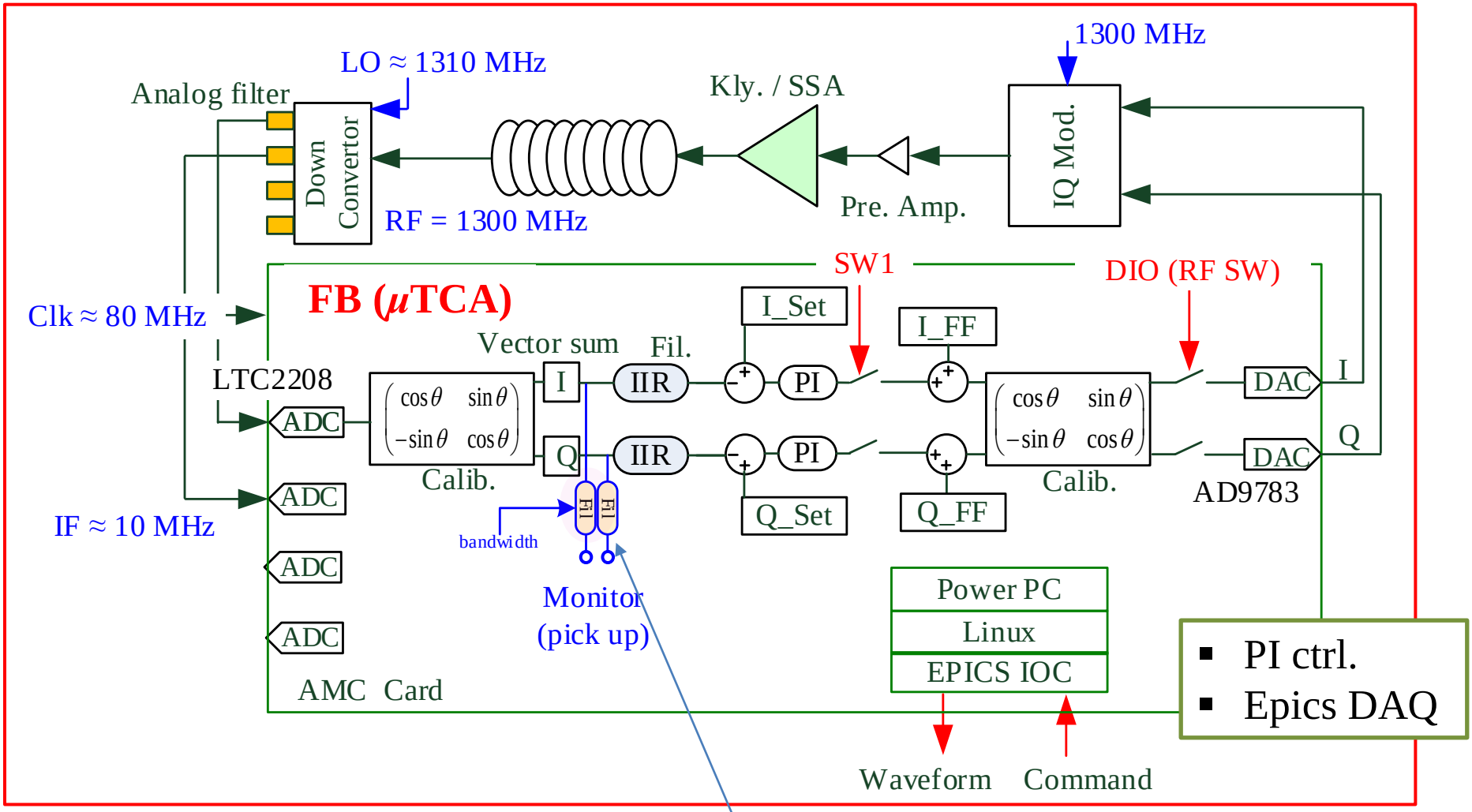

- PI ctrl.
- Epics DAQ

$$IIR: y(n) = \alpha \cdot x(n) + (1-\alpha) \cdot y(n-1), \ \ \alpha << 1$$

Current Performance (RF field)

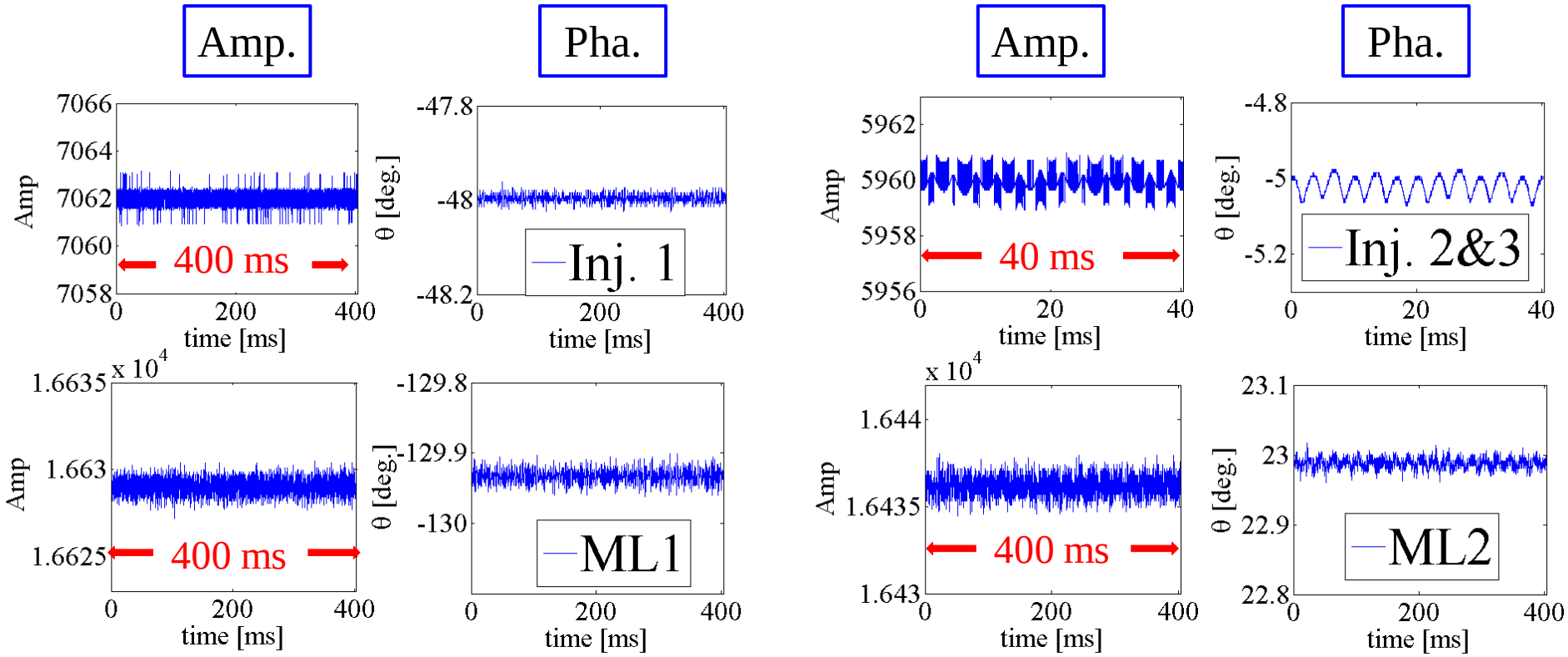

RF stability	Bun.	Inj. 1	Inj. 2&3 (VS)	ML1	ML2
ΔA/A [%. rms]	0.07%	0.006%	0.007%	0.003%	0.003%
Δθ [° .rms]	0.04°	0.009°	0.025°	0.010°	0.007°

Beam Momentum jitter is 0.006% (in agreement)

Performance (Beam energy)

- Beam momentum jitter is measured by screen monitor and determined by the peak point of the projection of the screen.

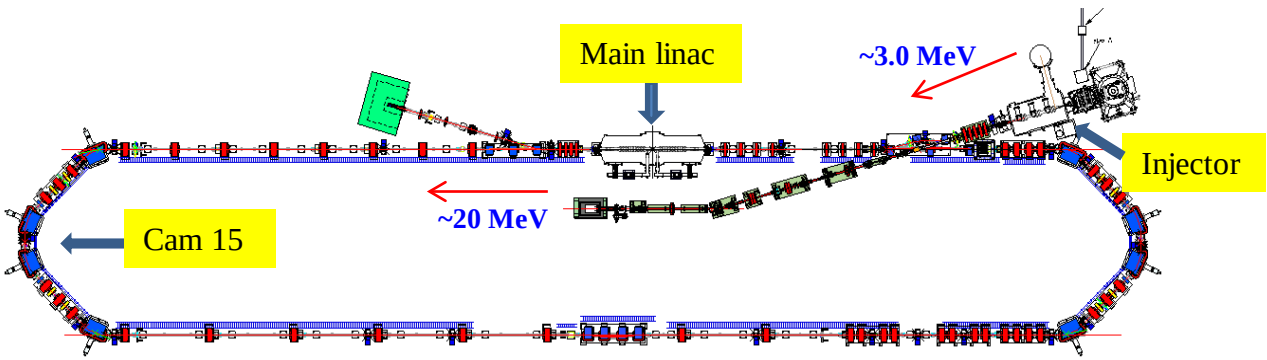

Dispersion
η=2.2m
Resolution
62.6 μm/pixel

Screen monitor

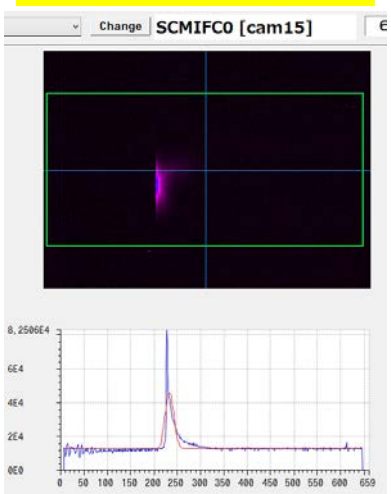

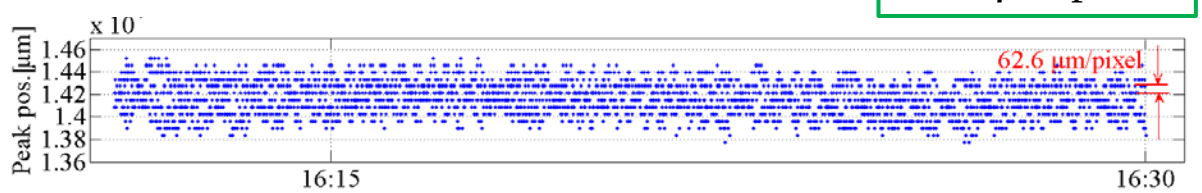

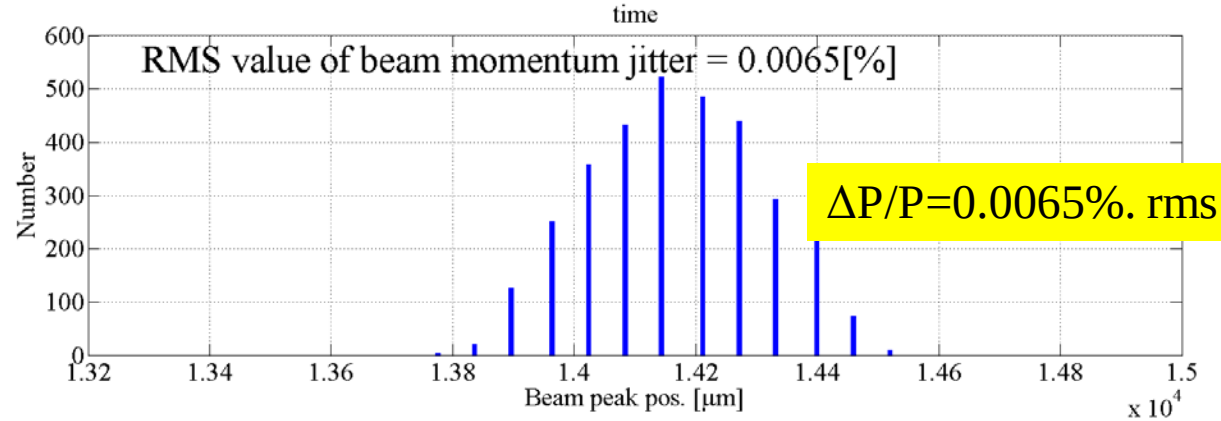

ΔP/P=0.0065%. rms

R&D (Adaptive FF)

Disturbances in RF system

- Main disturbances: High voltage power supply ripples (300 Hz) + burst mode beam-loading (0.5 mA~1mA, 1 ms ~ 2 ms) and Microphonics (DC ~ 500 Hz).

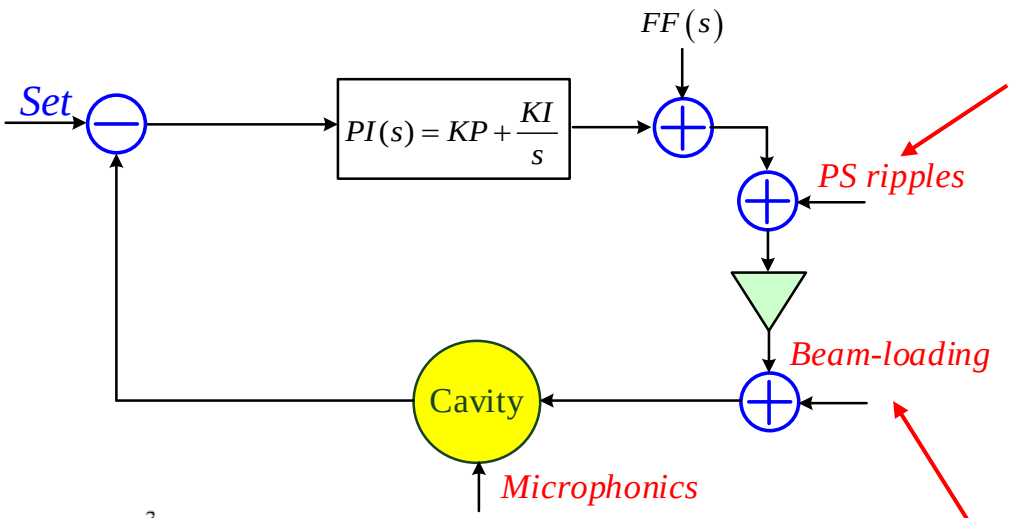

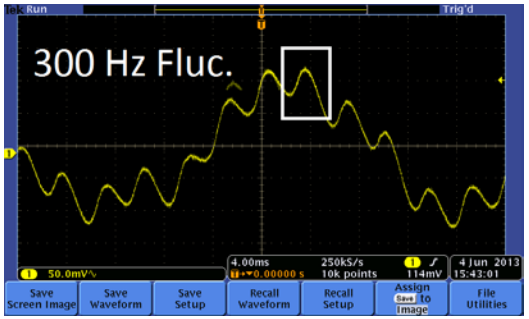

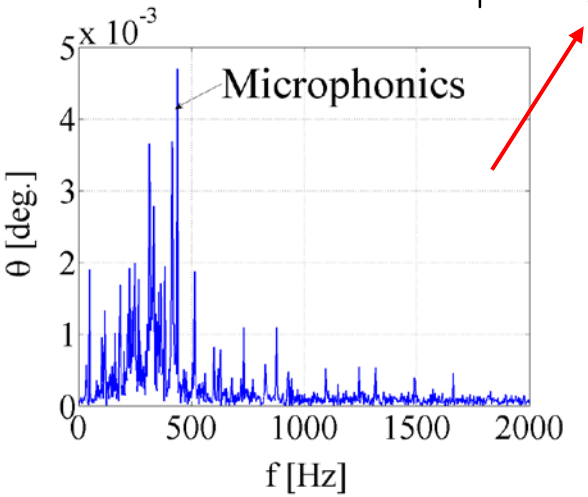

Adaptive FF ctrl

- The disturbances estimate $\hat{d}$ can be evaluated accurately if we "know" the mathematical model of the system (disturbance observer).
- Disturbance-Observer-Based control (DOB control)

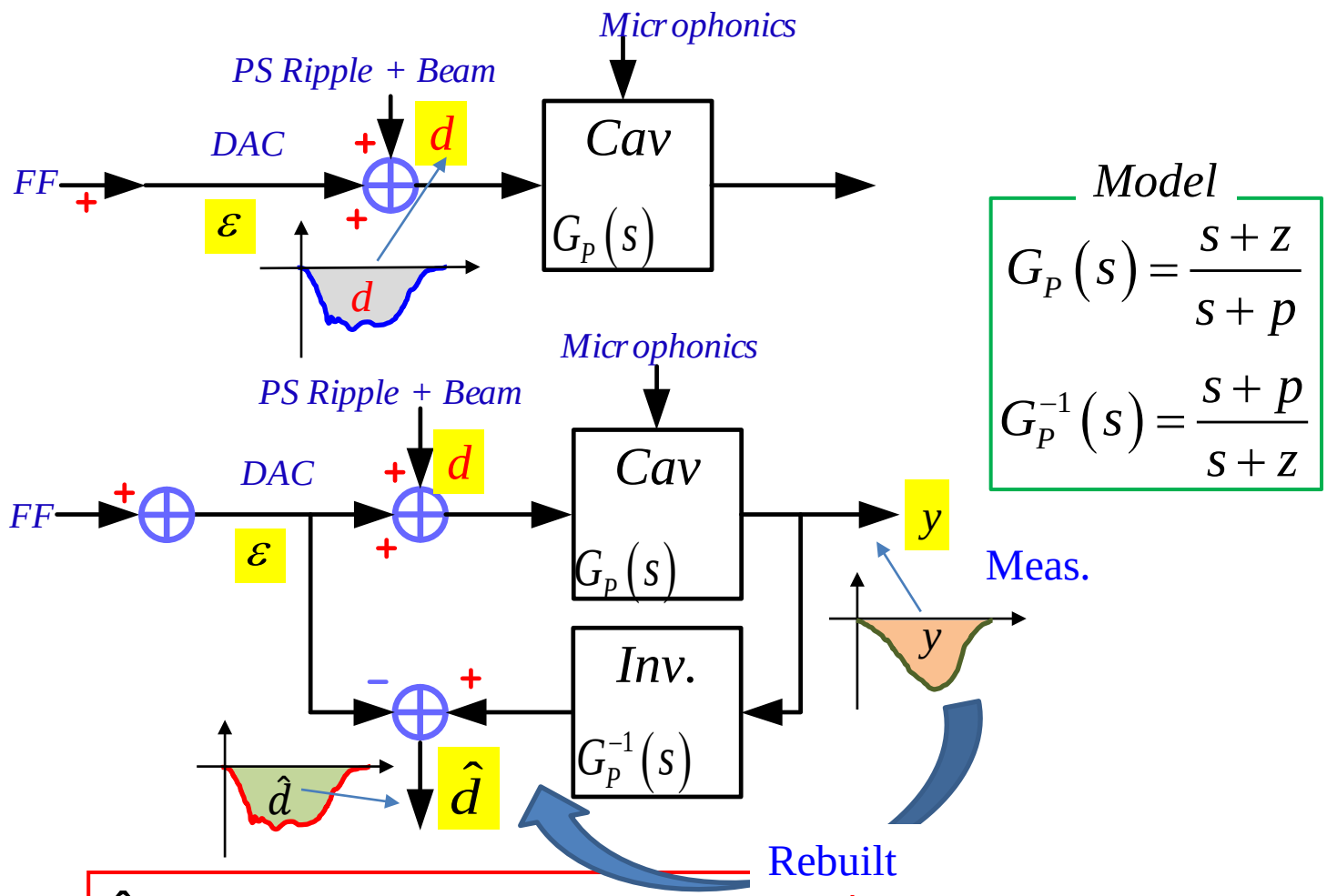

$$\hat{d} = (\varepsilon + d)G_p(s) \cdot G_P^{-1}(s) - \varepsilon = d$$

Adaptive FF ctrl (cont'd)

- The disturbances estimate $\hat{d}$ can be removed from FF table, thus the disturbance signal d is rejected.

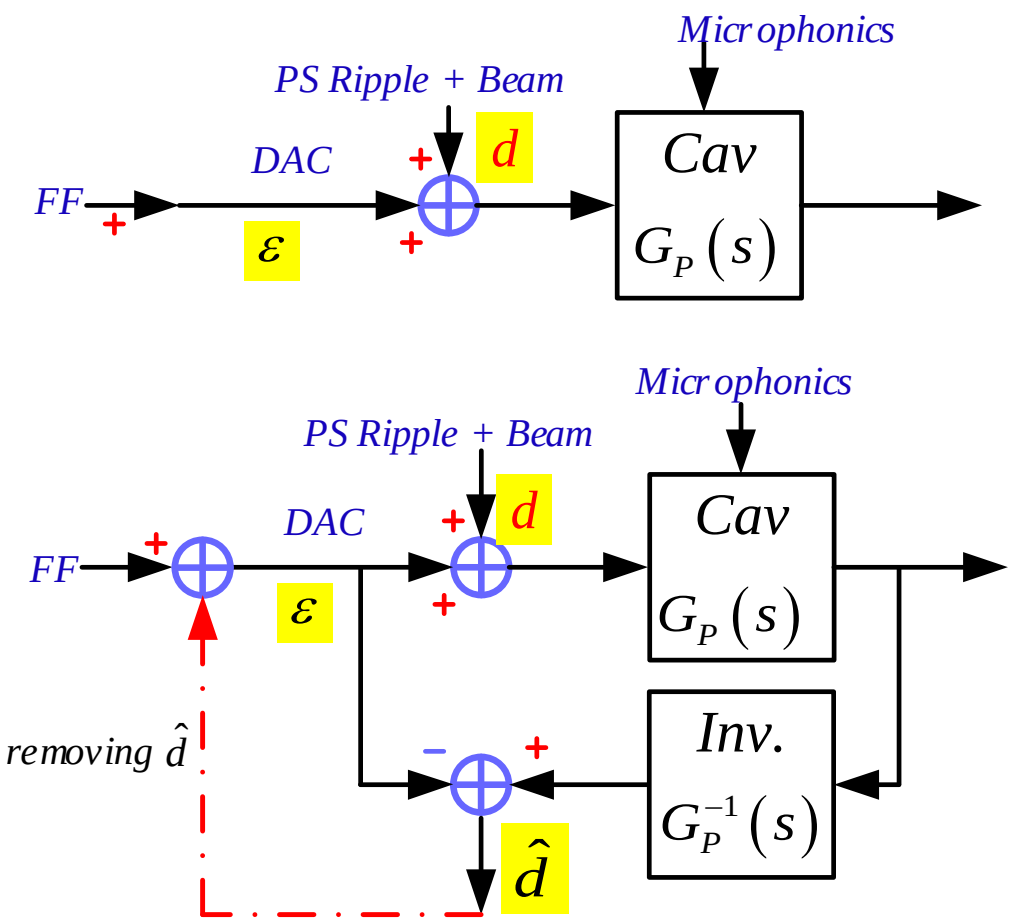

Model

$$G_P(s) = \frac{s+z}{s+p}$$

$$G_P^{-1}(s) = \frac{s+p}{s+z}$$

$$\hat{d} = (\varepsilon + d)G_p(s) \cdot G_P^{-1}(s) - \varepsilon = d$$

Adaptive FF ctrl (cont'd)

- In practical, the combination of AFF control and PI control.

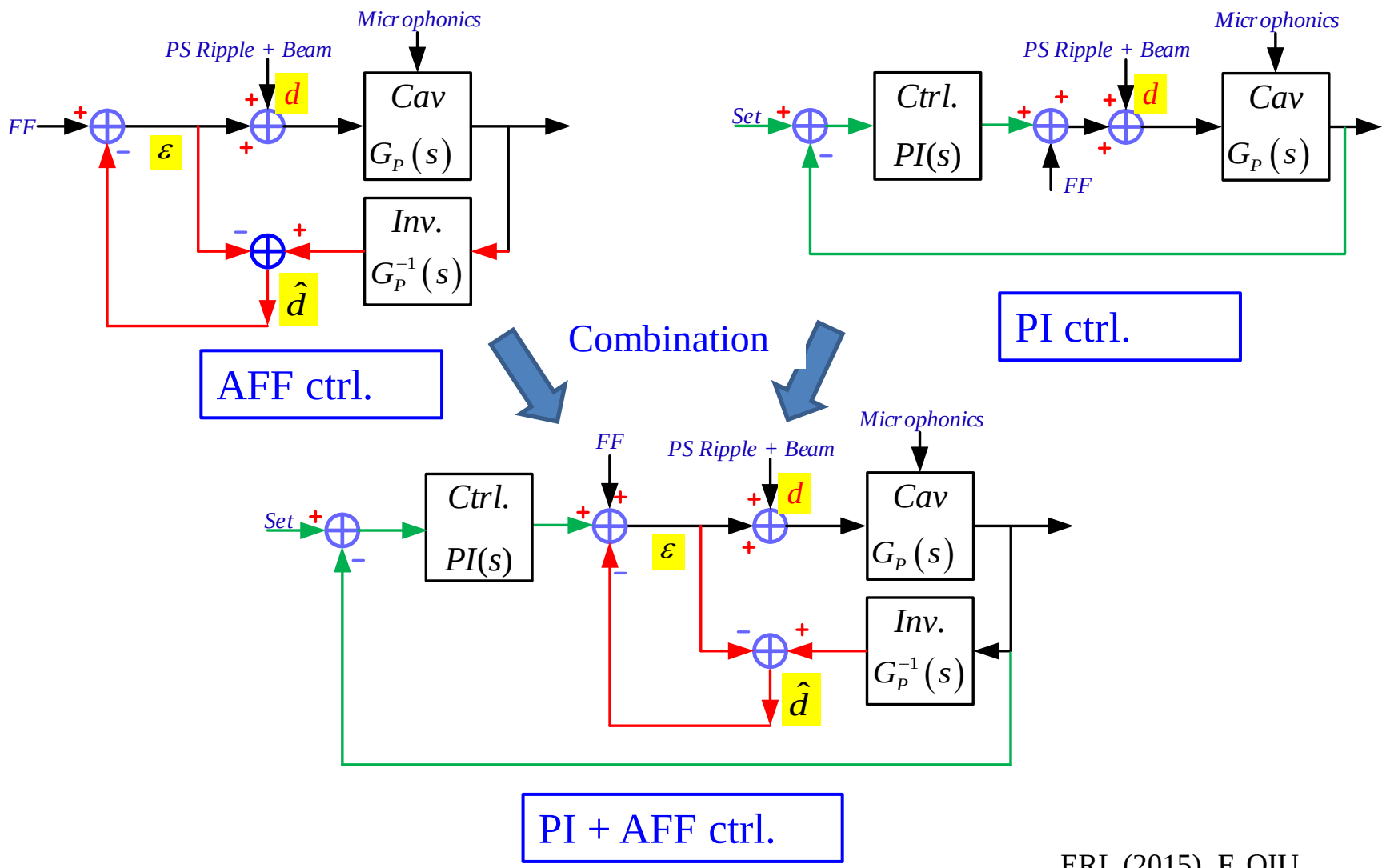

Disturbances 1 (HVPS ripples)

- Main disturbances: High voltage power supply ripples (300 Hz) + burst mode beam-loading (0.5 mA~1mA, 1 ms ~ 2 ms) and Microphonics (DC ~ 500 Hz).

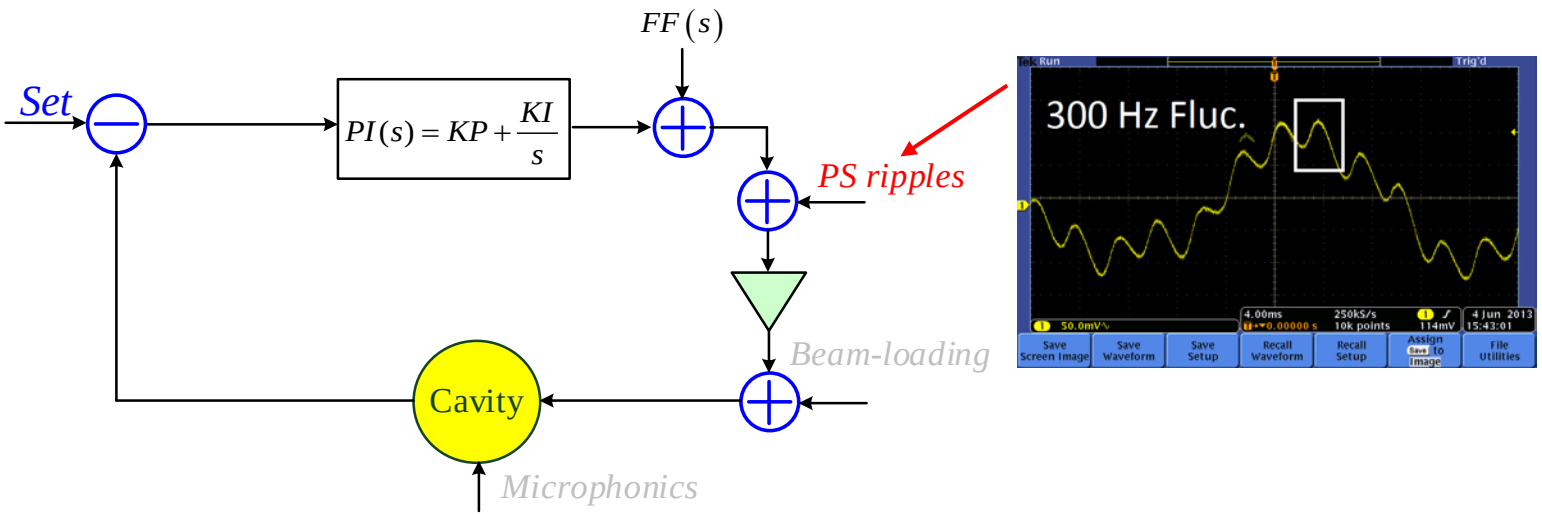

Application 1 (HVPS ripples)

- Disturbances: high voltage power supply ripples (300 Hz ripples).

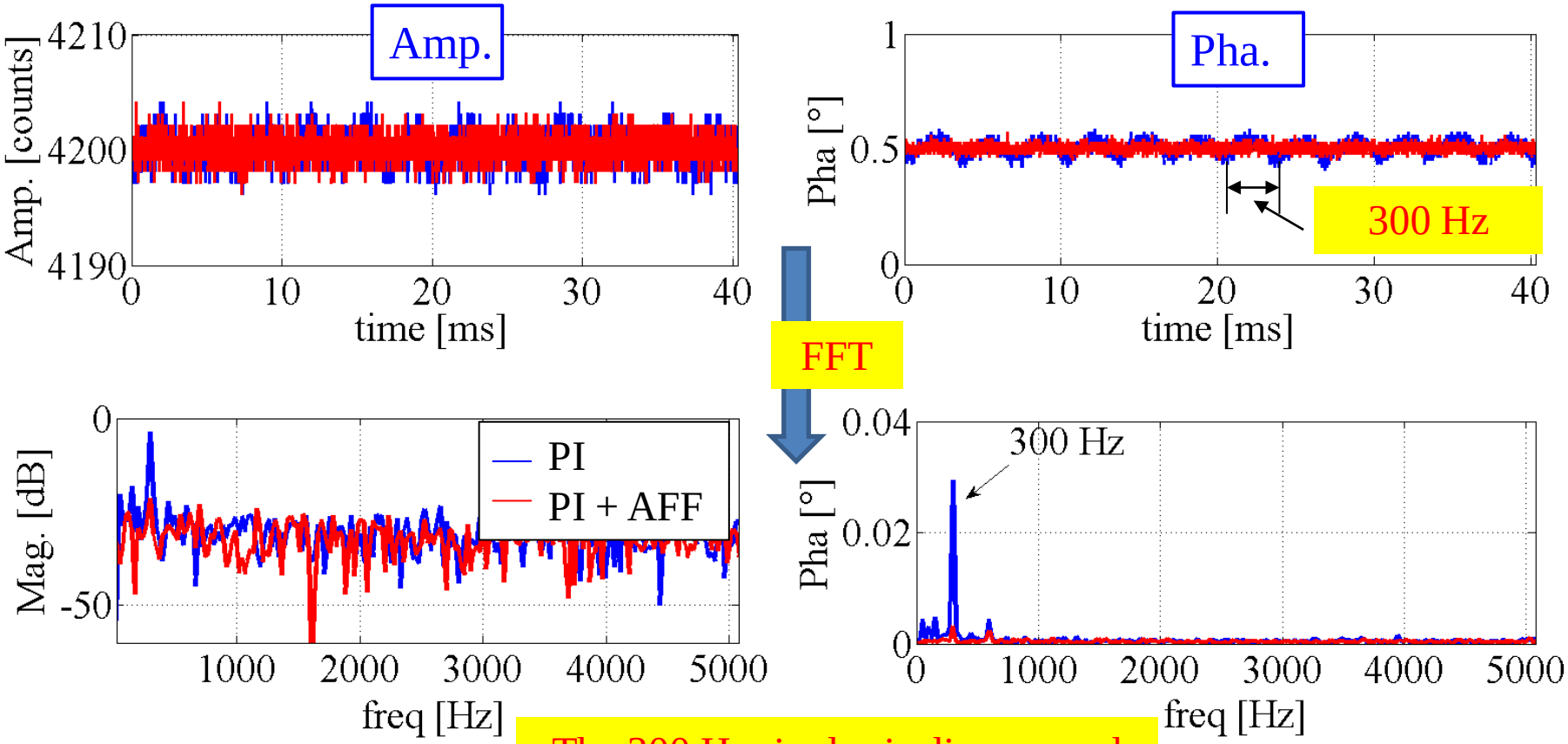

The 300 Hz ripples is disappeared

Disturbances 2 (beam-loading)

- Main disturbances: High voltage power supply ripples (300 Hz) + burst mode beam-loading (0.5 mA~1mA, 1 ms ~ 2 ms) and Microphonics (DC ~ 500 Hz).

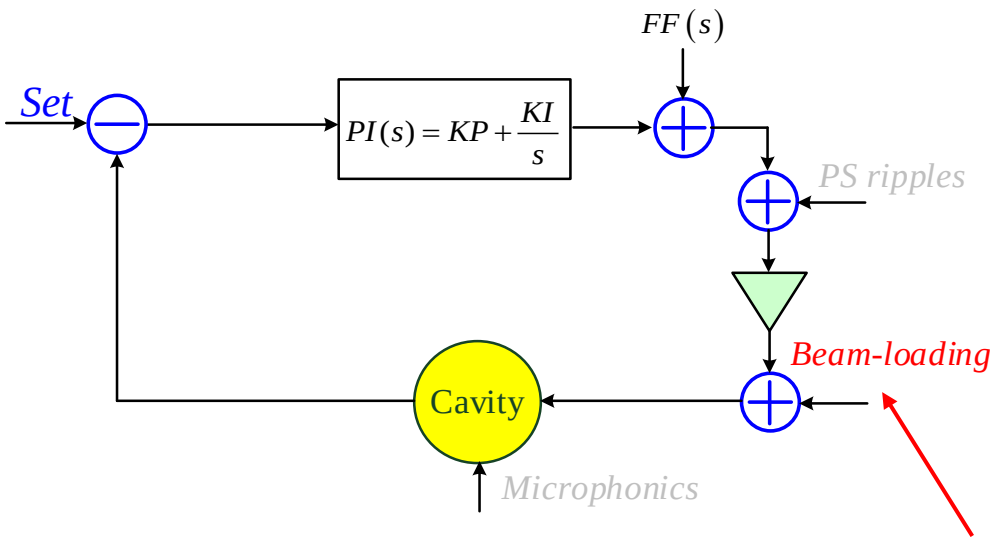

Application 2 (Beam-loading)

- Disturbances: Beam-loading (about 1.6 ms and 800 μA beam current)

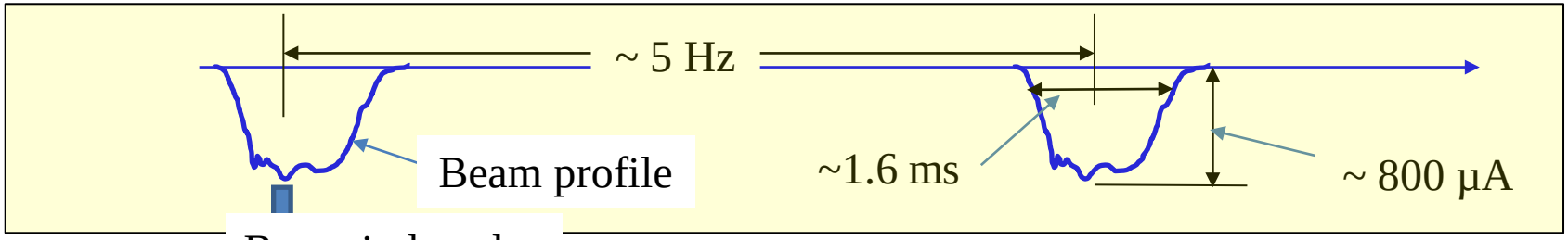

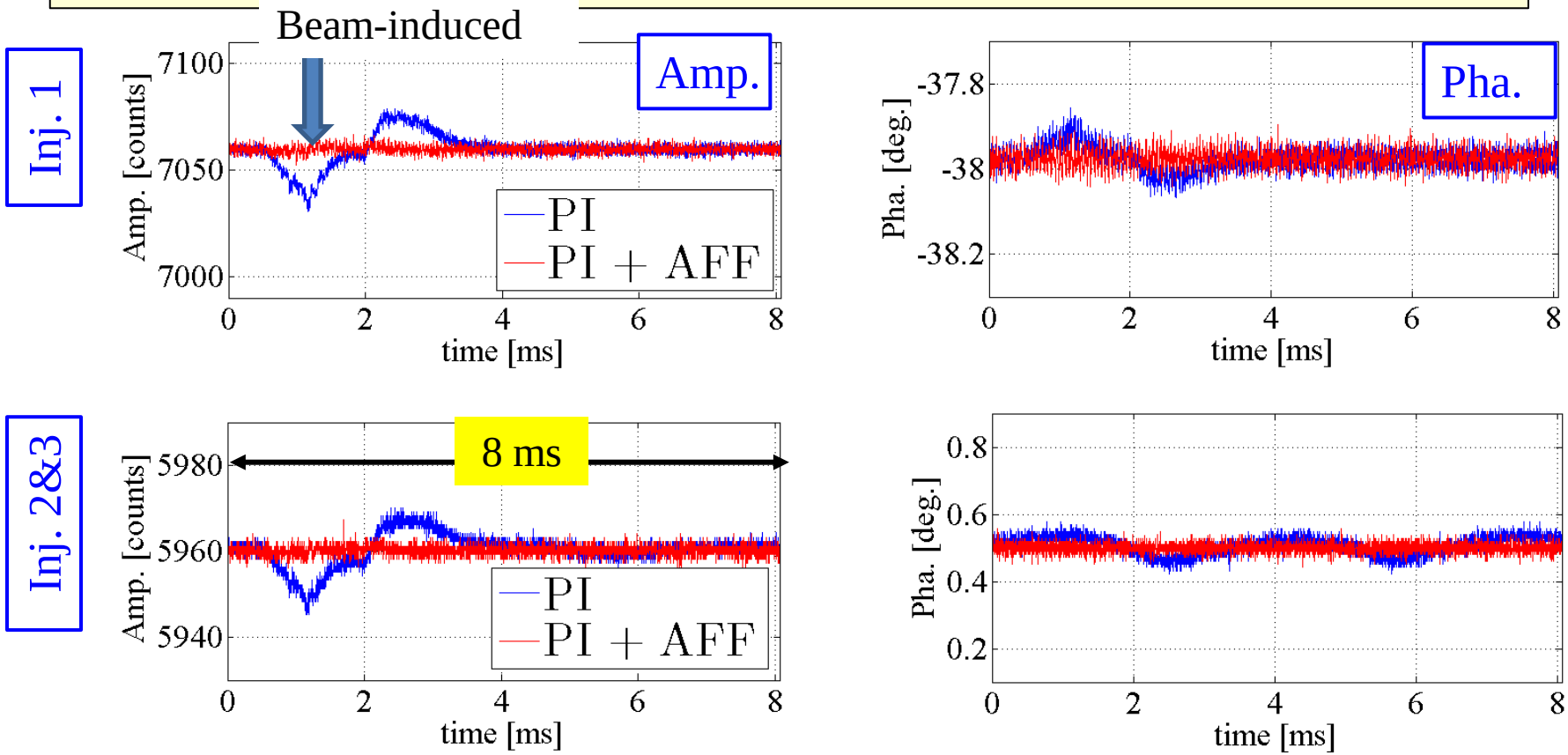

Disturbances 3 (Microphonics)

- Main disturbances: High voltage power supply ripples (300 Hz) + burst mode beam-loading (0.5 mA~1mA, 1 ms ~ 2 ms) and Microphonics (DC ~ 500 Hz).

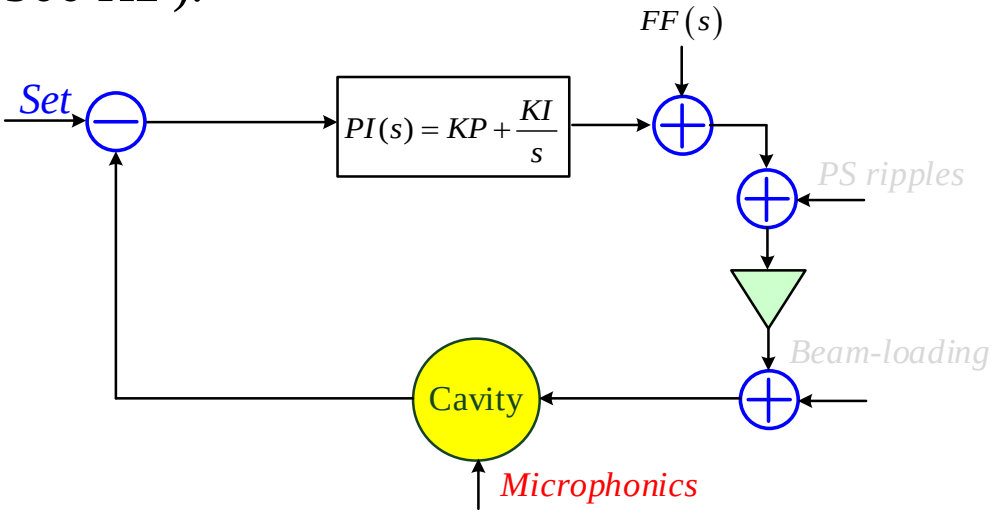

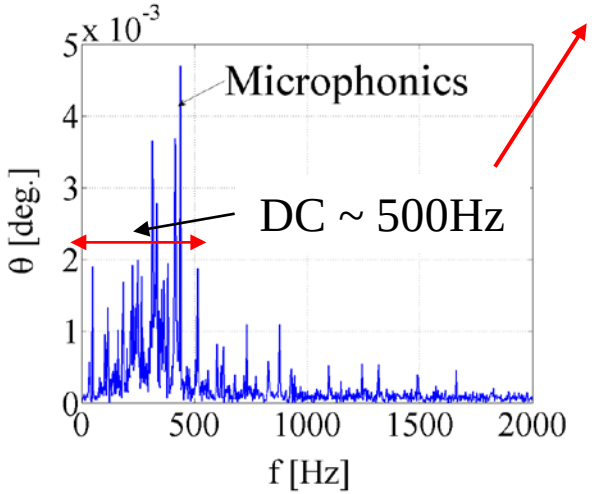

Application 3 (Microphonics)

- Disturbances: Microphonics (DC ~ 500 Hz)
- Even with high feedback gains, the microphonics still exist in the measured RF field.

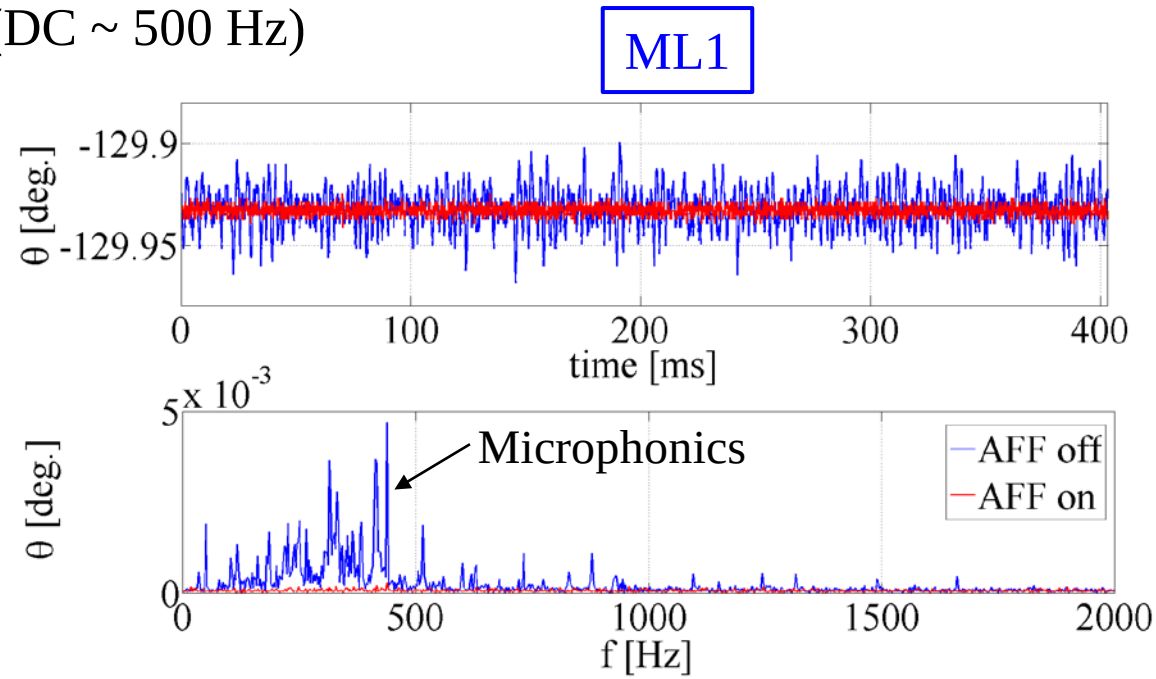

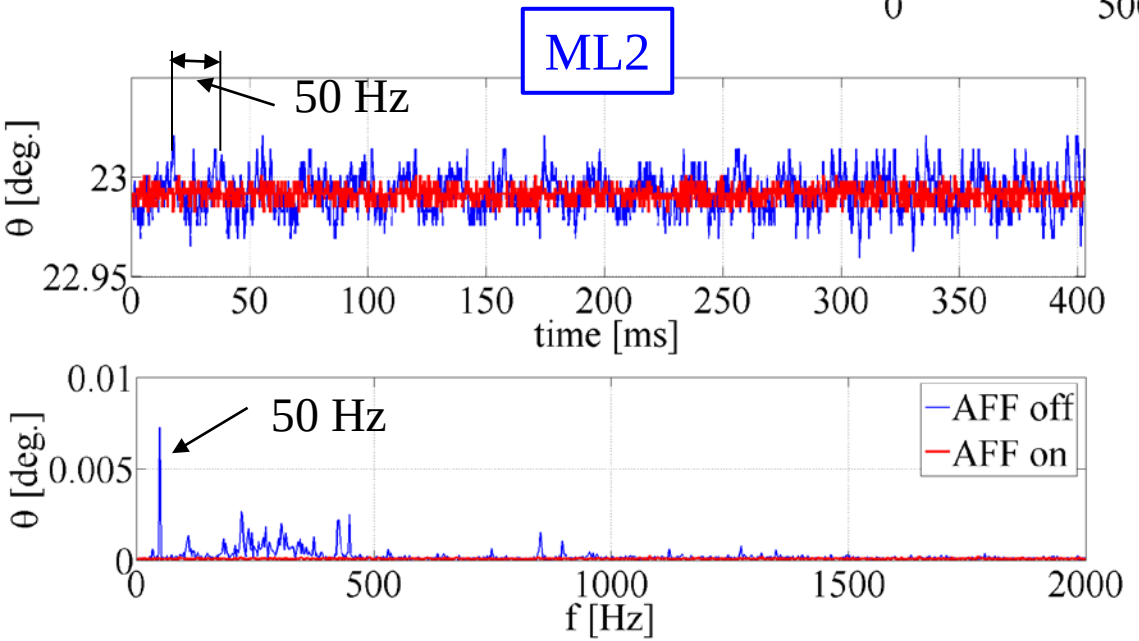

The 50 Hz component is disappeared

Summary

- Construction of the RF system for cERL was finished
- RF field requirement is satisfied.
- Very good beam momentum.
- Disturbances in RF system is rejected by a new AFF control approach

Back up

DSP algorithms (I/Q detection)

IQ Sampling:

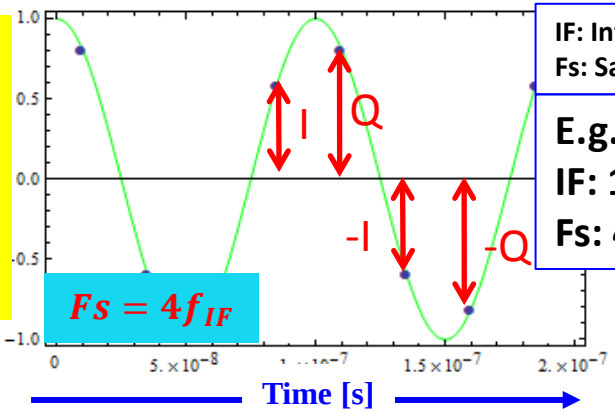

IF: Intermediate Frequency
Fs: Sampling Frequency

E.g.
IF: 10 MHz
Fs: 40 MHz

Non-IQ Sampling:

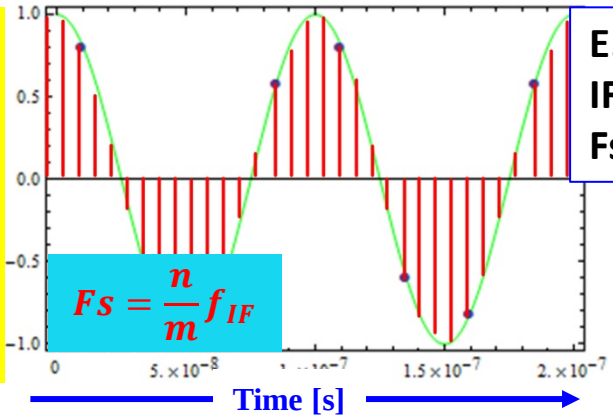

E.g. (cERL)
IF: 10 MHz
Fs: 80 MHz

Definition

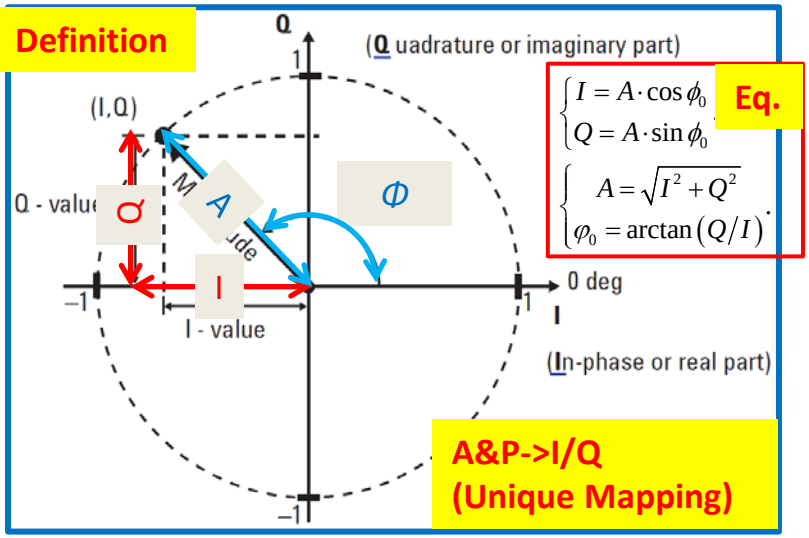

Eq.

$$\begin{cases} I = A \cdot \cos\phi_0 \\ Q = A \cdot \sin\phi_0 \end{cases}$$

$$\begin{cases} A = \sqrt{I^2 + Q^2} \\ \varphi_0 = \arctan(Q/I) \end{cases}$$

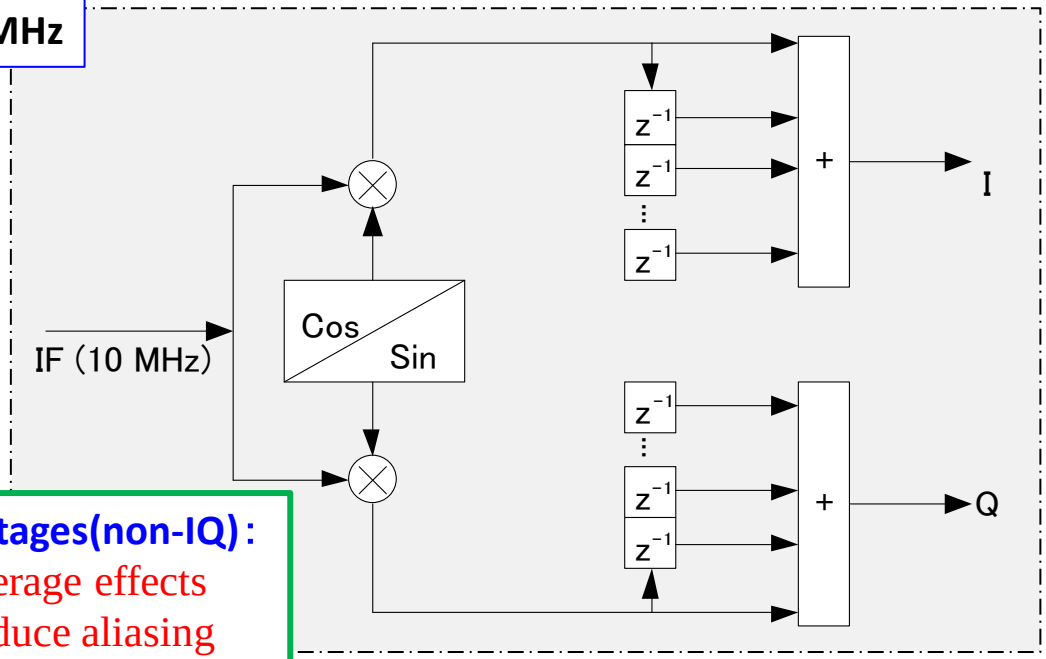

$$I = \frac{2}{8} \cdot \sum_{k=0}^{7} y_i \cdot \cos(k \cdot \frac{2\pi}{8})$$

$$Q = \frac{2}{8} \cdot \sum_{k=0}^{7} y_i \cdot \sin(k \cdot \frac{2\pi}{8})$$

Advantages(non-IQ):

- Average effects
- Reduce aliasing

Model Based FB optimization

- The "Q" filter (LP filter) is used for improving the robustness (remove the high frequency noises)?

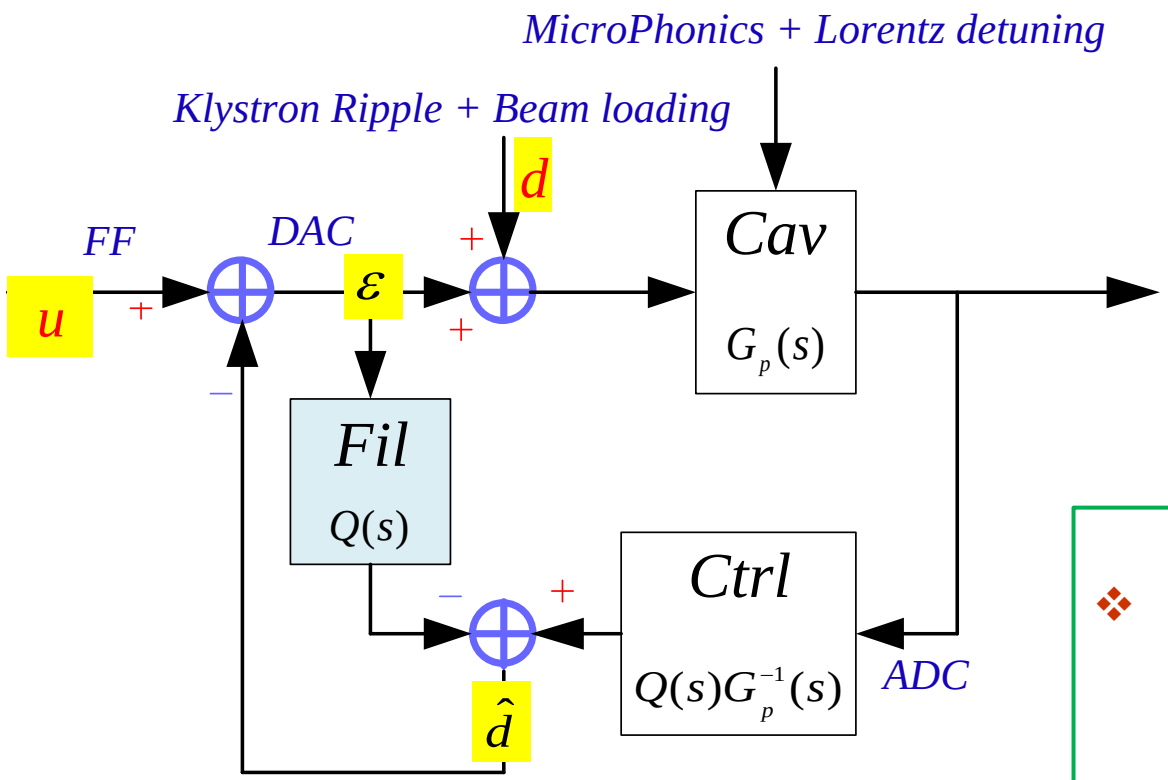

$$\hat{d} = (\varepsilon + d)G_p(s)\cdot G_P^{-1}(s)\cdot Q(s) - \varepsilon\cdot Q(s) = d\cdot Q(s)$$

Tips

- Connected another system $Q(s)$ with $G_P^{-1}(s)$ to make sure it can be physically realized.
- If the $Q(s)$ is an low-pass filter, then the d can be still evaluated.

Total LLRF diagram

- PI + DOBC (AFF)

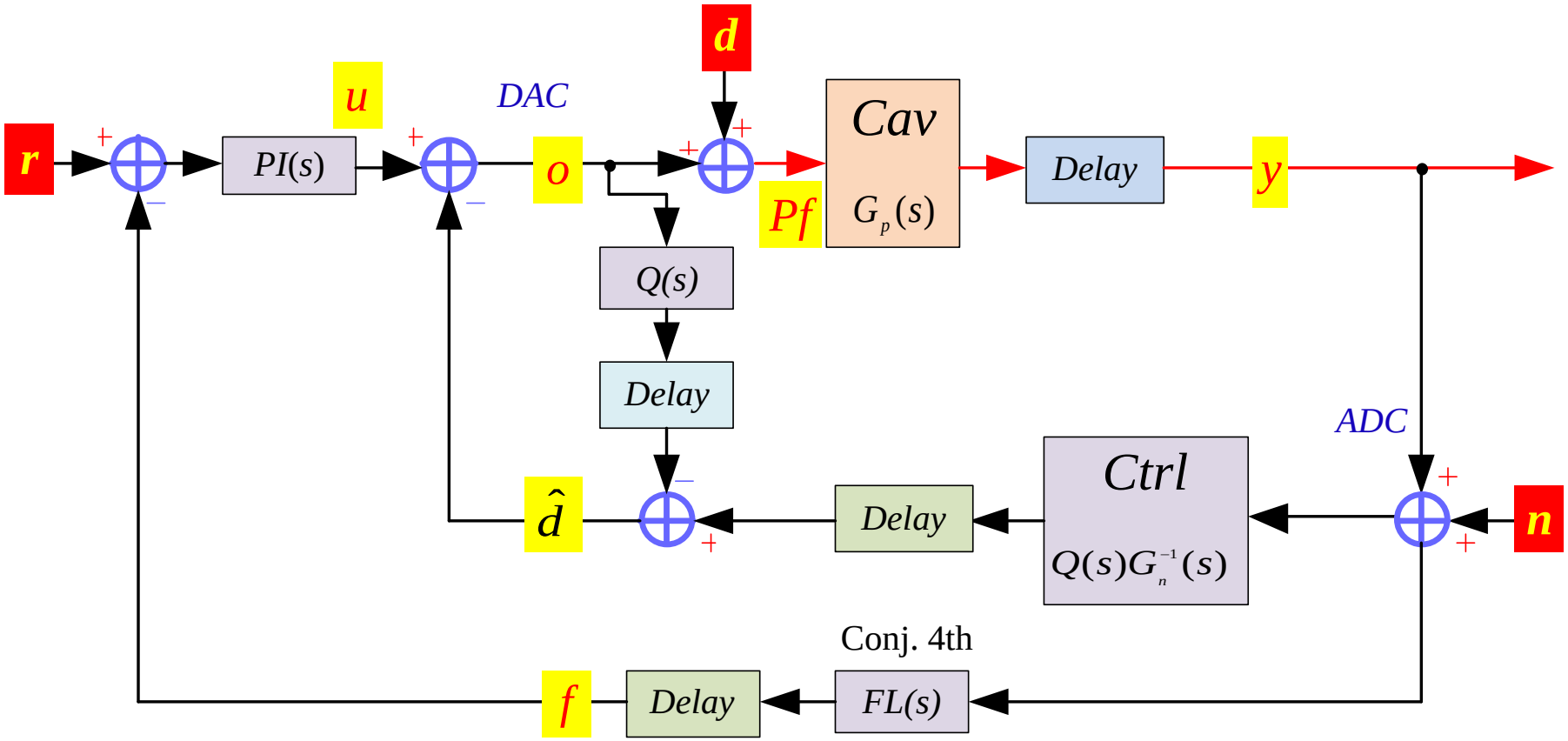

System Identification

- Input white noise in the DAC output and read the response from the ADC?

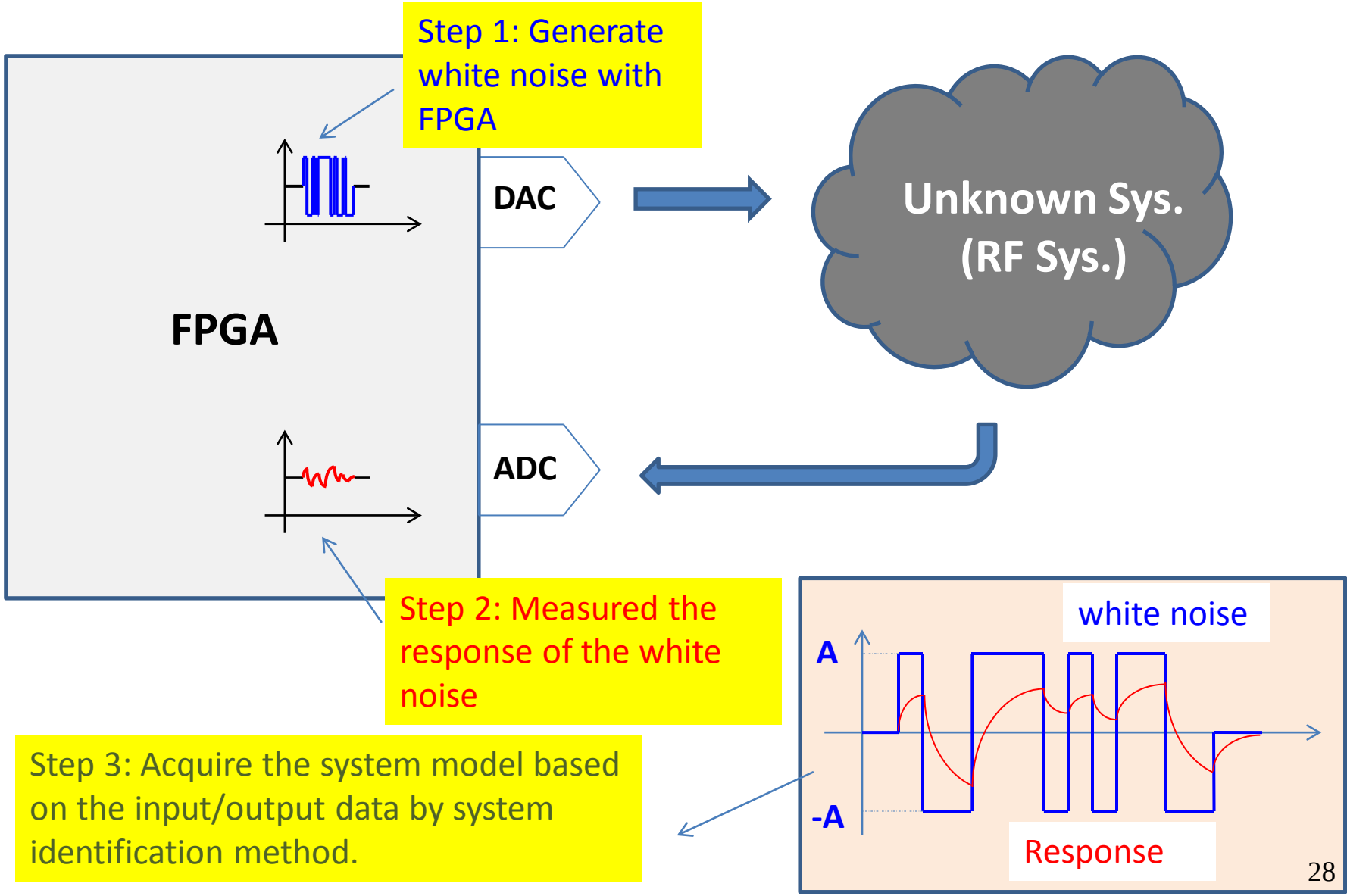

Application 2 (Beam-loading)
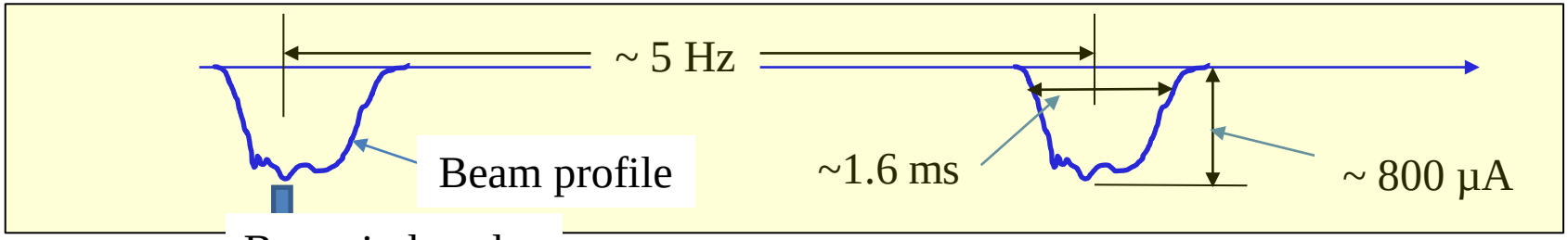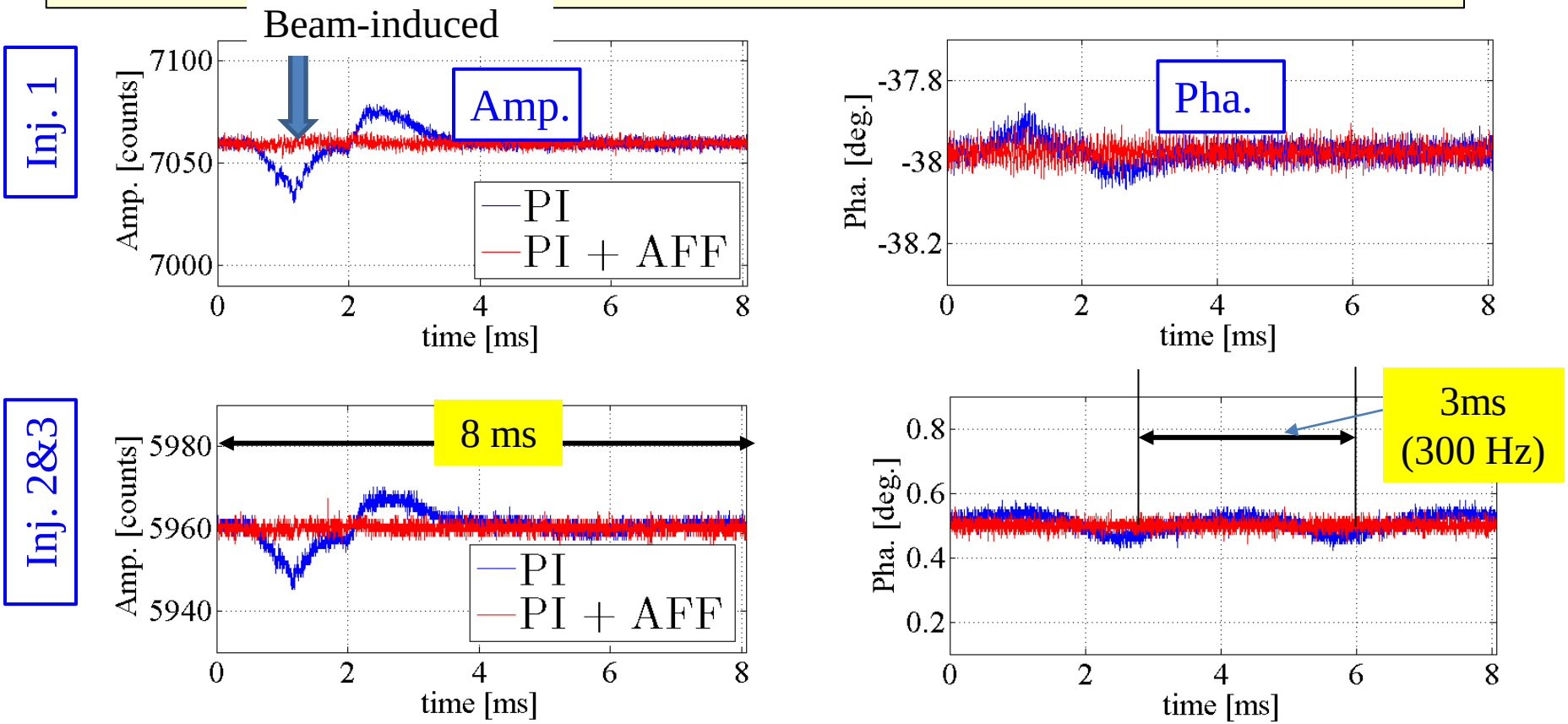
- Disturbances: Beam-loading (about 1.6 ms and 800 μA beam current)