Large Cavity Infrastructure at DUSEL

Richard Kadel
LBNL
October 16, 2008
UDiG Workshop, BNL

Key DUSEL Dates

•July 2007:	Homestake Site Selection for proposed DUSEL
•October 2008:	S4 solicitation for experimental proposals
•December 2010:	PDR-Preliminary Design Report, Baseline Scope, Schedule, Budget
•March 2011:	Earliest National Science Board Presentation of DUSEL MREFC proposal
•October 2012:	FDR Final Design Report for construction start in FY2013

DUSEL Org Chart

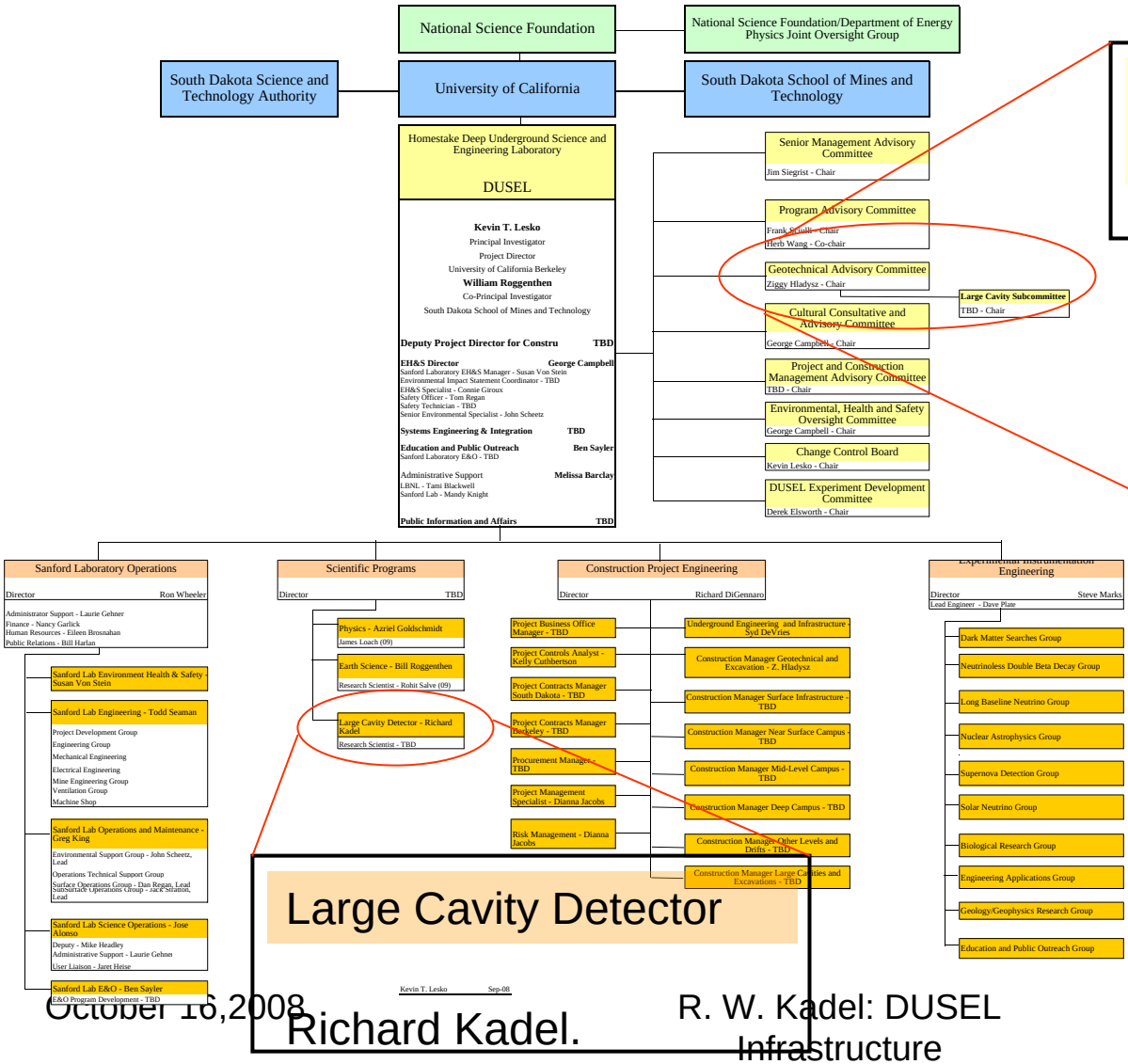

Geotechnical Advisory Committee

Ziggy Hladysz-Chair

Large Cavity Subpanel

TBD-Chair.

Large Cavity Detector

Richard Kadel.

Geotechnical Advisory Committee and Large Cavity Board

- GAC fully functioning (geotech RFP)
- LCB Organized by DUSEL, DEDC, and NSF
  - LCB Members are independent consultants and experts in large underground cavities
  - LCB Charge is being finalized now. They will provide oversight and recommendations to the DUSEL Project regarding:
    - Initial studies prior to 4850 ft level access
    - Plan for cores, locations and analysis
    - RFP for Cavern design & approval
    - RFP for Excavation plan & approval

Available Input to Geotech Large Cavity Board

- RESPEC, "*Rock Mechanics Evaluations of Detector Room in the National Underground Laboratory at Homestake*." Topical Report RSI-1430, Feb. 2001.
- Tesarik, et al, "*Initial Stability Study of Large Openings for the National Underground Science Laboratory at the Homestake Mine, Lead, SD*." NIOSH, 2003.
- Golder Assoc. "*Detector Chamber Analysis, Presentation to DYNATEC*," June 30, 2004.
- Golder Assoc., "*Final Report on Geotechnical Analyses of Proposed Laboratory Excavations at the Former Homestake Mine, Lead," SD., Report Nr.* 06-1117-014 May, 2006.

Initial Suite of Experiments

- Part of the proposal for the NSF MREFC* is expected to be a single large cavity for neutrino experiments.
- The current thinking is the NSF will provide the 1st cavity, and the DOE will approve and sponsor the experiment.
- The current cost estimate to construct a single cavity for a ~100Kt fiducial volume H_2O Cerenkov Detector is ~$90M

(*Major Research Equipment and Facility Construction)

100Kt Cavern Cost estimate

(Laurenti, FNAL 2008 Aug 15)

	($Millions)	
• Cavern excavation:	33.9	
• Equipment	10.9	
• Overhead (10%)	4.4	
• Markup(20%)	8.7	
• Contingency (40%)	22.8	
• Skipping cost ($4/Ton)	2.0	(501 kTon)
• Disposal $10/Ton	5.0	(501 kTon)
• TOTAL	$86.9M	(1 cavern)

Planned DUSEL contributions prior to construction approval

- ~$2M for Geotechnical studies
- ~$22M for Architectural, rock mechanics and design studies (ie ~25% of cavern construction costs)
- Physics and detector requirements specified by LBL collaboration
- Cavern construction oversight provided by the DUSEL Large Cavity Sub committee

Example of a Physics Spec for Cavern: H_20 Cerenkov Detector

- Depth: 4850ft
- Total fiducial Mass: 500kT (H_20)
- Minimum fiducial mass per cavity: ~ 100kT
- Max dimension (underwater, for light propagation): 75 m
- Lifetime: 30 years
- Excavation time ~ 4 - 7 years
- Dual egress from all drifts and cavities plus refuge locations
- Design should inherently protect DUSEL from catastrophic flood.

Other Cavern Specs?

- Maximum Water Depth (PMT collapse):
  ~ 60m?
  – Mitigate with R&D to increase PMT strength
- Vertical walls (ease PMT mounting)?
  – Mitigate by fixing “scaffolding” to (non-vertical) walls, use volume occupied by “scaffolding” as muon veto buffer.→ Value Engineering
- Chronic Gadolinium leak recapture strategy (if doped)?

Current draft layout of 4850 level 3 x 100 kT H20 Detector

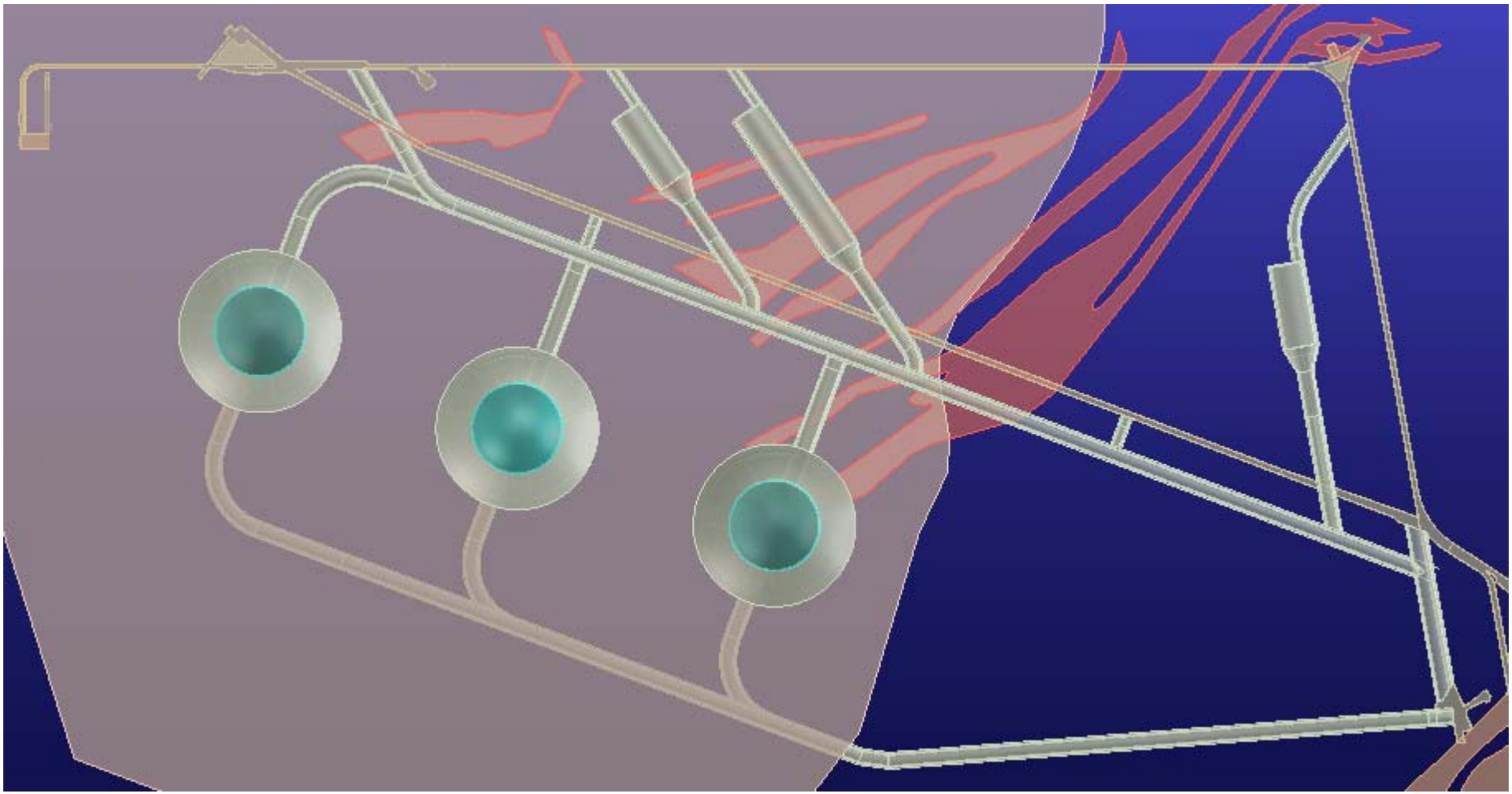

Underground Infrastructure: What will the MREFC provide? Example:

- A stable cavity, at least 100kT fiducial volume (assuming Geotech R&D supports this size).
  - Rock bolts, metal mesh, shotcrete etc. to insure stable cavity with expected lifetime of 30 years.
- Tunnels and drifts to access cavity for construction and eventual experimental occupation
  - Major Drift for control room and staging
  - Major Drift for Purification Plant.

    (Purification Plant itself is not included)
  - Calibration space?

Other Underground Infrastructure

- HVAC adequate for personnel and Mining operations (but not for large cryogenic inventories)
- Ross shaft for rock removal
- Yates shaft for scientific personal and equipment
- Lighting (Intensity TBD)
- Utilities stubs
  - 5MW of power (!?)
  - ~1000 l/min “industrial water”

Lead City "raw" water report

DF = Dilution Level
MDL = Method Detection Limit
PQL = Practical Quantitative Limit
~ 5-10 x MDL.

NB: Current water from mine has 20-40 ppm Iron. Lead 'raw' water Is less than 0.050mg/liter.

MIDCONTINENT TESTING LABORATORIES, INC.

2381 South Plaza Drive P.O. Box 3388 Rapid City, SD 57709
(605) 348-0111 -- www.thechemistrylab.com

Sample Site: Lead-Deadwood Sanitary District
Sampled: 06/30/05 at 10:40 AM by Kevin Espeland
Purpose: Survey
EPA Number: 0190 Lead-Deadwood Sanitary District
Sample Matrix: Water
Lab ID#: 20050630842
Received: 06/30/05 at 02:30 PM by Kate Shreves
Account: 8591 DENR - Drinking Water Program

KEVIN ESPELAND
DENR
523 E. CAPITOL AVE.
PIERRE, SD 57501

RAW WATER

Parameter	Result	Units	DF	MDL	PQL	Method	Analyst	Date
Physical Properties								
Electrical Conductivity	484	µmhos/cm	1	0.247	1.00	EPA 120.1	JAM	07/01/05
Hardness	247	mg/L	1			SM 2340 B	SCR	07/05/05
Total Dissolved Solids	261	mg/L	100ml	15.5	50.0	EPA 160.1	TMN	07/05/05
pH	8.38	SU	1			EPA 150.1	JAM	07/01/05
Non-Metallics								
Alkalinity	258	mg/L	1	0.337	10.0	SM 2320 B	JAM	07/01/05
Bicarbonate	306	mg/L	1	0.411	10.0	SM 2320 B	JAM	07/01/05
Chloride (Cl-)	3.50	mg/L	1	0.383	0.500	SM 4500-Cl B	NJF	07/01/05
Fluoride	0.099	mg/L	1	0.008	0.050	SM 4110B	NJF	07/05/05
Langelier Scale Index	0.997	LSI	1			Calculation	SCR	07/05/05
Nitrogen, Nitrate (NO3)	0.083	mg/L	1	0.014	0.050	EPA 353.2	DES	07/01/05
Nitrogen, Nitrite (NO2)	< 0.050	mg/L	1	0.005	0.050	EPA 353.2	DES	07/01/05
Sulfate (SO4)	< 10.0	mg/L	1	3.60	10.0	EPA 375.2	DES	07/01/05
Metals - Dissolved								
Calcium (Ca)	51.1	mg/L	1	0.054	1.00	EPA 215.1	BMC	07/01/05
Magnesium (Mg)	28.9	mg/L	5	0.230	2.50	EPA 242.1	BMC	07/01/05
Potassium (K)	< 0.500	mg/L	1	0.020	0.500	EPA 258.1	BMC	07/01/05
Sodium (Na)	1.91	mg/L	1	0.186	0.500	EPA 273.1	BMC	07/01/05
Metals - Total								
Iron (Fe)	< 0.050	mg/L	10	0.004	0.050	EPA 200.8	JEM	07/05/05
Manganese (Mn)	< 0.010	mg/L	10	0.000036	0.001	EPA 200.8	JEM	07/05/05

Notes:
Raw Water

Approved By: Steve Dissen

Approved On:07/07/2005 10:37 AM

Underground Infrastructure

- Fiber optic for data transmission to surface
- GPS clock signal
- Survey team and Survey points in cavity
  - Salaries paid by experiment
- Small amounts of N_2 gas or liquid
  - DUSEL will have ~1000 liter dewar
  - Not sufficient N_2 supply to inert a detector

What's not included

- The experiment (PMTs or cryostats, their mounts, electronics, etc or the labor to install them)
- The purification systems
- EDIA* for experiment
- Large gas or liquid supply
  - (excluding industrial H_20.)
- Underground counting rooms, clean rooms or enclosures specific to the experiment

(*Engineering, Design, Inspection and Administration)

What's not included: Integration issues with Experiment: H_20 Cerenkov Detector Example

- How are PMT's and other structures installed?
  - What hardware *must* be installed *as the cavity is excavated*?
- Array of "Hard Points" in cavity to mount experiment?
- Water seal/drainage (Gd issues)?
- Magnetic field bucking coils?
- Deck above experiment?
  - Trusses > 50 m span !
  - Integrate muon tracker into deck & cavern ceiling? (KamLAND & SNO installed muon trackers after the fact to test PMT reconstruction algorithms)?
- Crane(s)?
- Other, moveable or stationary access or installation equipment?

LAr

- DOE will select technology for large cavity detector
- Large volumes of cryogenic liquids underground pose serious safety concern
  - He leak in LHC tunnel from magnet quench is an recent example
- What is largest credible accident?

Safety Schemes for Cryogen recovery

HERON
Vacuum vessels
to capture He
•Safety issue
•Cost Inventory savings

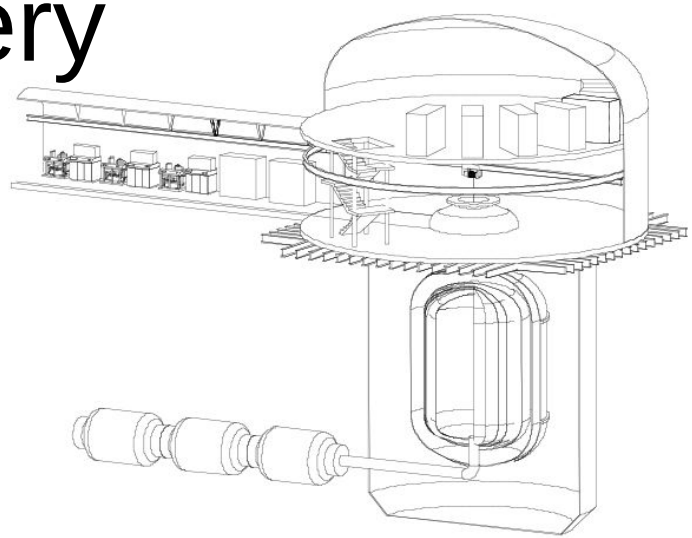

FNAL magnet quench He recovery tanks

Ventilation Concept
Large Cryogenic detectors

- Use existing or new shafts and drifts and with fans to vent gas to #5 shaft
- Costs to upgrade, cut new shafts or drifts and hardware borne by experiment
- Argon spill to be considered in EIS

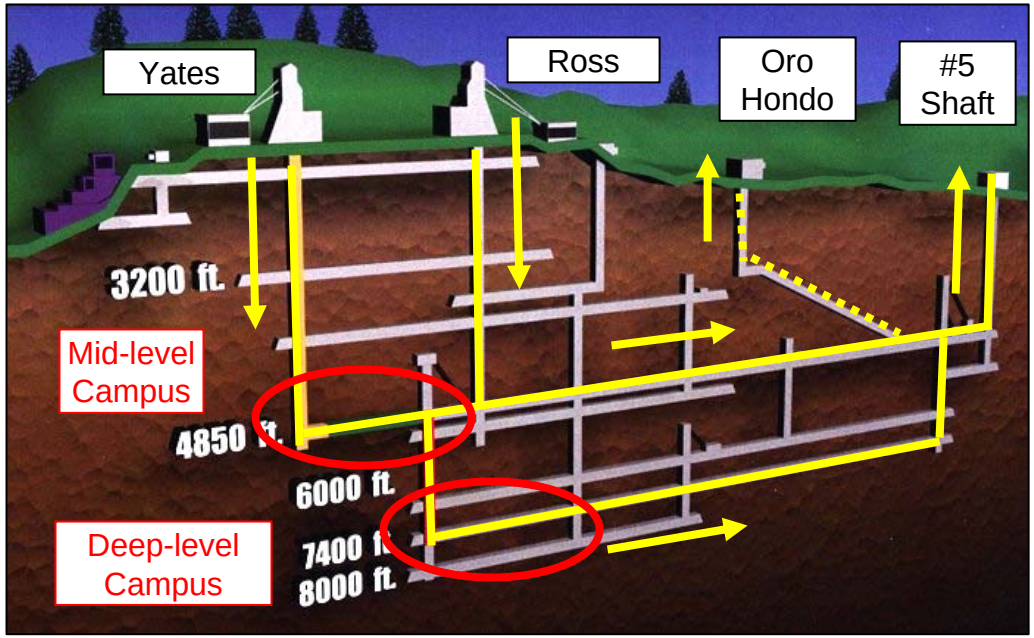

#5 Shaft Headframe

#5 Shaft Exhaust Ventilation Fans

Conclusion

- Current discussion is that the initial suite of experiments will include NSF funding for a large cavity for neutrino physics at DUSEL.
- One large cavity included as part of MREFC
- Will require a strong collaboration that can convince the funding agencies they have the resources and competence to build the detector.
- NSF DUSEL yearly review in January will include the Large Detector→ an important milestone for us.

Recent Pumping History

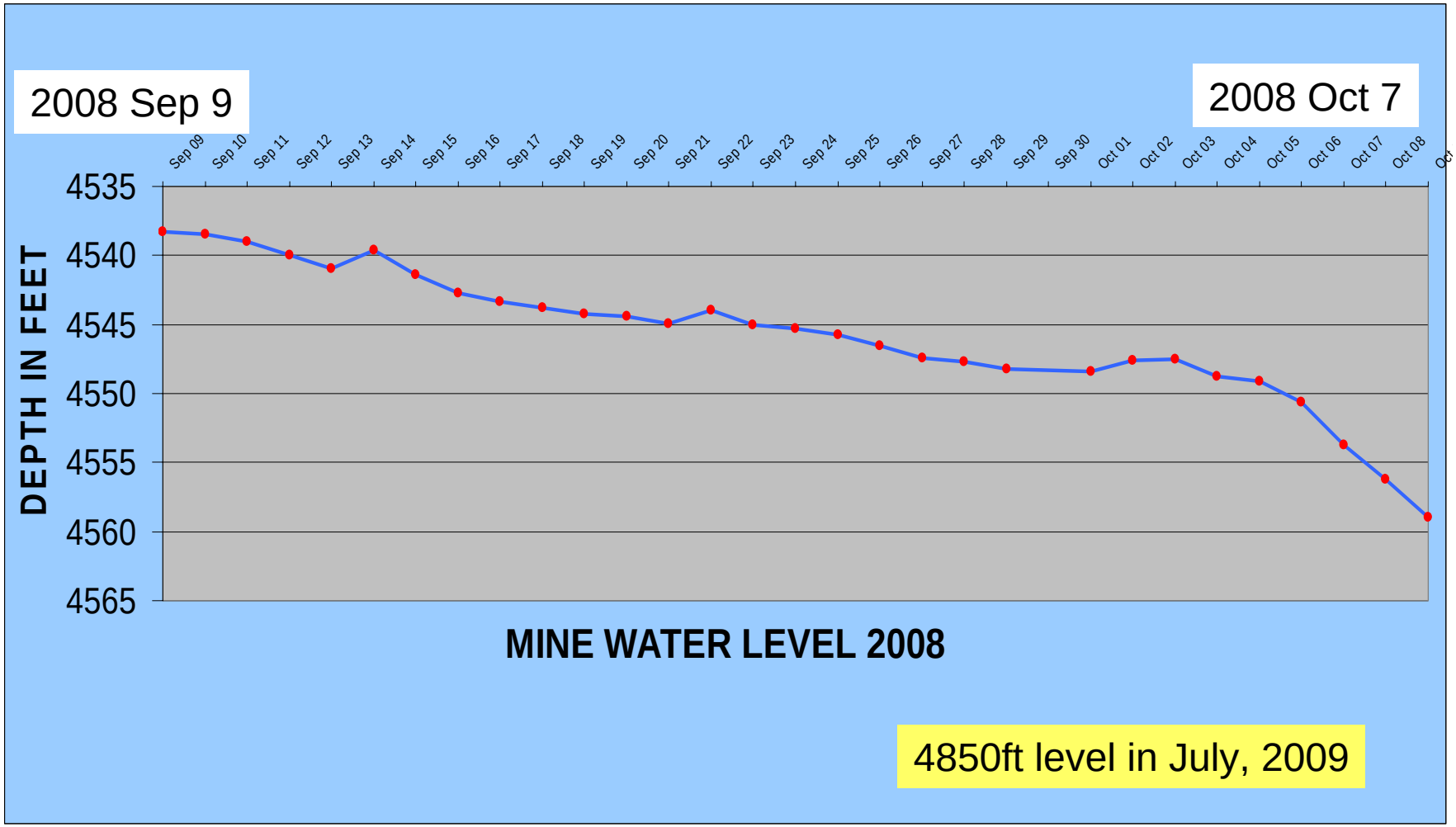

Generic Infrastructure

- Administrative offices (23ksf) including 25 (30) Permanent (visiting scientist) offices
- Shared Assembly Facilities. (67ksf)
  - Small, Large and High Bay assembly
  - Machine shop/Electronics shop
  - Dry storage
  - Remote expt. Control rooms (12)
- Sanford Education Science Center (50ksf)
  - Visitor Lodge/Dorm (15 rooms)
- 300/800ft ft level (40 ksf)
  - Education & outreach module
  - Low bkg microforming and Assy facility: 800ft

4850ft level (240ksf) (Generic Infrastructure, con't)

- 2 - 3 laboratory Modules (phased)
- Davis Lab,→ ultimately low bkg counting facility?
- Lab support facilities (~15ksf)
  - Equipment Car Wash
  - Air Filtration & Cooling room
  - Electrical Facilities Substation
  - Wash/Change room
  - Refuge Station/ Cafeteria
  - Waste Water Pre-treatment
- Ross Shops remodel into common shop (4skf)