USI: Safety Analysis for Coherent Electron Cooling Proof of Principle (CeC PoP) Experiment at RHIC

Table of Contents

Introduction 2
CeC PoP Experiment 2
Installation of CeC at RHIC 2 o'clock Region 8
Conduct of Operations 11
CeC Experiment Layout and Equipment at RHIC 13
Layout 13
RF Systems 18
Cryogenics System 28
Power and Electrical Systems 33
Beam Dumps, High Power and Low Power 35
Instrumentation 39
Cooling System 42
Laser System 43
Free Electron Laser (FEL) 44
Safety Analyses for Non-Standard Industrial Hazards 47
Oxygen Deficiency Hazards 47
Ionizing Radiation Hazards 51
Accelerator Safety Envelope Procedure, Credited Controls and Safety Bases 60
Administrative Controls 62
Specific Assurance Methods for CeC Commissioning and Operation 63
Attachment 1 – Revised 2015 RHIC ASE 66
Attachment 2 – Revised RHIC ASE Procedure 68

Introduction

The Collider-Accelerator Department (C-AD) Chairman is requesting the Laboratory ESH Committee (LESHC), the Assistant Laboratory Director for ESH (ALD for ESH) and Head of DOE Area Office (BHSO) approve or recommend for approval, as applicable, operation of the electron linac used in the Coherent Electron Cooling Proof of Principle (CEC PoP) Experiment at RHIC IP2.

C-AD management requests the CeC PoP electron accelerator be authorized as defined in DOE O 420.2C. The accelerator will be managed under the RHIC ASE. See attachment 1. The RHIC ASE is modified to include Credited Controls added for CeC PoP and RHIC simultaneous operations.

The 2011 C-AD SAD is amended by this USI. The CeC experiment is to be operated under the C-AD Conduct of Operations and C-AD assurance programs. SBMS requirements for standard industrial hazards are included in the 2011 C-AD SAD by reference to the Job Risk Assessments (JRAs) and Facility Risk Assessments (FRA) program at C-AD. Standard industrial hazard controls meet requirements in SBMS. The safety analyses here focuses on non-standard industrial hazards and controls for CeC PoP operations.

The safety analysis of the radiation hazards for the CeC PoP Experiment was reviewed by C-AD Radiation Safety Committee and a low risk was determined when Credited Controls are implemented. The CeC PoP experiment review for other hazards was performed by the C-AD Accelerator Systems Safety Review Committee. Another non-standard industrial hazard identified was oxygen deficiency. The safety analyses for both these non-standard industrial hazards are included in this USI. An IRR and ARR process, as per SBMS, will be used to review readiness for commissioning and operation of the electron accelerator used in the CeC PoP Experiment.

CeC PoP Experiment

The goal of the CeC PoP Experiment is to demonstrate cooling in the longitudinal energy spread of the RHIC beam. The scope of the experiment is to cool longitudinally a single bunch of 40 GeV/u Au ions in RHIC. In addition to use of e-beam for CeC experiment, the e-beam will be used to study novel aspects of beam-beam effects in RHIC by collisions between the electron and hadron beams. These tests would be carried out after completion of CeC PoP Experiment. These tests if proposed will be reviewed by the C-AD Radiation Safety Committee for a USI determination.

In practice, the CeC PoP accelerator layout is sketched in Figures 1a and Figure 1b using most of the available space between two DX magnets at RHIC IP2. A 22 MeV linear accelerator will provide an electron beam that will be merged with 6 to 12 Au ion bunches circulating in Yellow Ring in RHIC during RHIC Run 16. Both beams will co-propagate through the 14 m long CeC system after which the electron beam will be separated from the Yellow Au ion beam and dumped.

RHIC beam will have a special lattice and physicists have determined the location of the ion-electron interaction point needed to be shifted in order to avoid interference with the electrons in the CeC PoP undulator for the experiment. Table 1 shows parameters for a RHIC proton beam in Yellow Ring during the CeC PoP Experiment.

Table 1 Main Beam Parameters for CeC Experiment

Species in RHIC	Au^{+79} ions, 40 GeV/u
Relativistic factor	42.96
Number of particles in bucket	10^9
Electron energy	21.95 MeV
Charge per e-bunch	0.5-5 nC
Rep-rate	78.17 kHz
Average e-beam current	0.39 mA
Electron beam power	8.5 kW

In the CeC PoP Experiment, electrons will be generated in the 2 MeV 112 MHz SRF gun, pass through 300 kV bunching cavities and transported to the 704 MHz SRF linac for acceleration to full energy up to a nominal 22 MeV. See Figures 1a and 1b, and refer to Table 2.

Sub-systems of the experiment operation include:

- Water and power systems, power supplies and magnets, vacuum system and diagnostics
- The cryogenic system, both 2K and 4K. This system has been reviewed for safety by the BNL Cryogenic and Pressure Safety Sub-Committee[1, 2, 3]

[1] LESHC PCSS 15-03, Review of the CEC 704 MHz 5-Cell Cavity Cryostat and 2K Cryo Subsystem (password is oper8)

- The laser delivery system that requires the laser area is secured according to SBMS laser safety requirements

The CeC experiment may operate in two modes; low power and full power. Low-power allows for developmental operations often associated with an experimental accelerator. Low-power operation allows early detection of any malfunctioning equipment and taking the corrective actions.

Table 2 Range of the Electron Beam Parameters in Various CeC Modes

Parameters / Mode	Low-Power Operation		Full-Power Operation	ASE Limit
	First Dump	Second Dump	Second Dump	
Beam Energy Range				
Nominal MeV	1.5 – 22	20 - 22	20 - 22	25
Allowable MeV	1 – 25	10 – 25	10 – 25	25
Beam Current Range, μA	0.036 – 0.9	0.036 – 0.1	0 - 800	-
Beam Power, W	1 - 800	1 - 800	< 8500	2000[4] 8500[5]

The CeC electron gun is capable of producing maximum beam energy of 2.5 MeV, which is limited by the available heat load on the liquid helium system. The beam-accelerating capability of the each 500 MHz buncher cavity is less than 300 kV, which is an experimentally determined value. The energy gain in the 704 MHz linac is up to 21 MeV. Thus, equipment capability for CeC PoP devices limits the maximum beam energy to 24.1 MeV.

There is no need to complicate the CeC PoP Experiment by transporting low-energy electron beam (<10 MeV) through the RHIC beam-pipe to reach the Full Power Dump. While technically possible, it would require additional analyses to safely accommodate a 10-fold energy change of the electron beam in the dog-leg and RHIC beam-line transport.

---

[2] LESHC 13-14 Review the 112 MHz SRF Cavity Gun Cryostat System and Cryogenic Supply Cryostat and Distribution System at RHIC's IP2 (password is oper8)
[3] LESHC 13-09 Initial Review of the 704 MHz 5-Cell Niobium Cavity Cryostat System for the Coherent
Energy Cooling (CeC) Project in IP2 (password is oper8)
[4] First dump power limit averaged over 1 hour
[5] Second dump power limit averaged over 1 hour

The hardware limit on the gun beam power, 2500 W, is set by the available RF power from the 2000 W amplifier with 25% added due to possible acceleration of the electron beam in the bunching cavities. The pulse repetition rate will be less than 10 Hz. With nominal full-beam energy of 22 MeV, the hardware limit on full-beam power is 19,500 W.

Table 3 show the estimated beam time during the 2016 RHIC running period that would coincide with CeC PoP experiment running. The estimate is based on 5 working days per week and 2 shifts per day. It does not account for down time and cathode lifetime. All commissioning and conditioning with electron beam shall be done by trained operators and qualified physicists in the C-AD Main Control Room in Building 911.

Table 3 Integrated Beam Time for Commissioning CeC during 2016 Run

Month	Hours @ 1 W	Hours @ 6 kW	Note
January	0	0	Start-up, RF conditioning
February	320	0	To low power dump
March	350	0	To high power dump
April	325	25	To high power dump
May	300	50	Commissioning
June	250	100	Commissioning, experiment

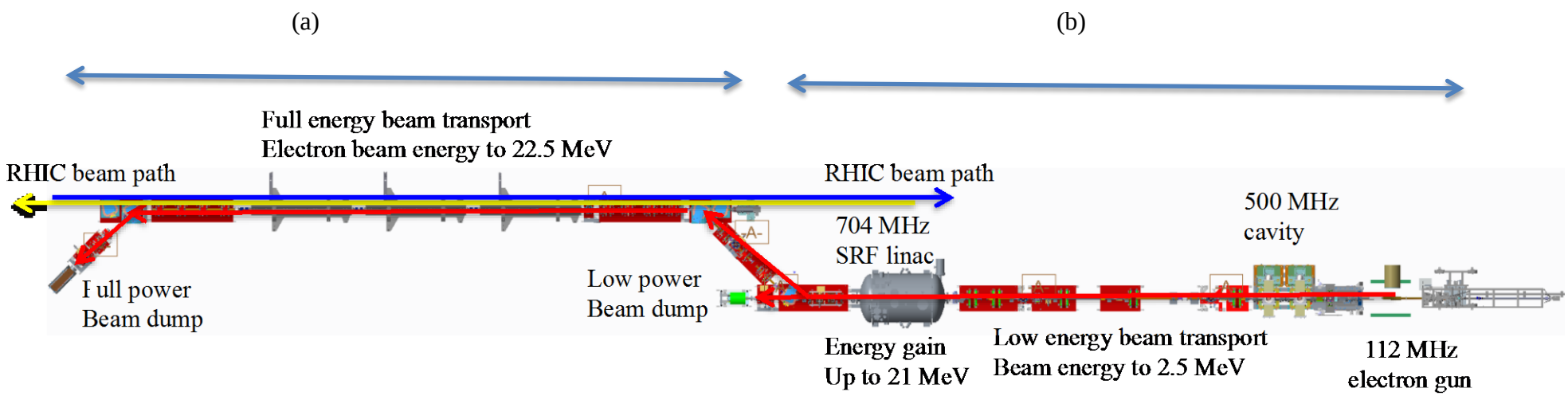

Figure 1a Layout of CeC Devices: (a) Devices in Common with RHIC Beam; (b) CeC Accelerating Devices

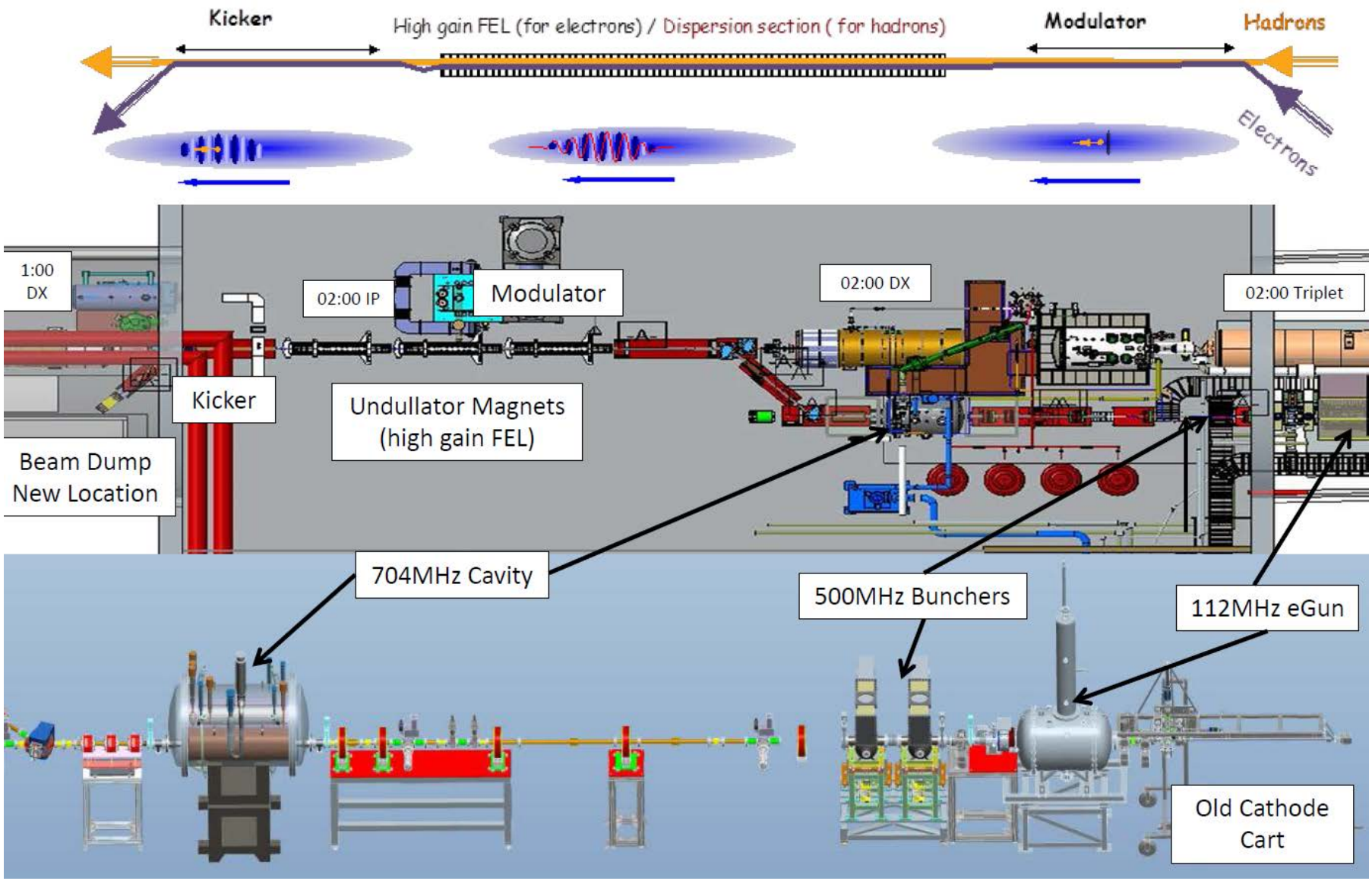

Figure 1b Layout of Beam Line Devices

Installation of CeC at RHIC 2 o'clock Region

The structure and configuration of modifications includes:

- Extensive new cable tray
- New racks, cabinets, power supplies and RF amplifiers
- Routing of RF Coax that included core drilling 9-inch ports through 7 feet of existing concrete shielding
- Modification of floor gratings for beam-line stand support
- Relocation of Access Controls at Gate 2G11
- Design, fabrication and installation of new modular-structure-style Laser Building

The installation of new ports for RF coax and Laser transmission was reviewed with the Chair of the Radiation Safety Committee (RSC) for suitability from a radiation safety perspective. The review required determination of distance and angle of the ports from the beamline which was needed for the analysis. See Figure 2.

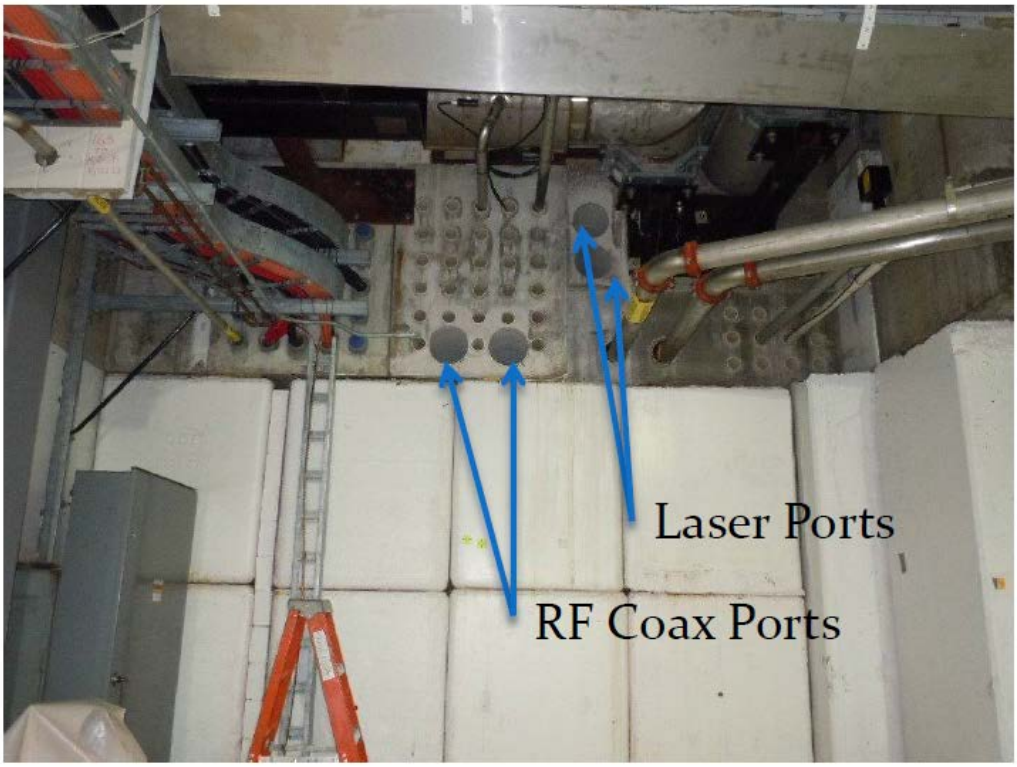

Figure 2 – Location of Port Penetrations above Beam Height

Utilities include a high-voltage power supply for RF amplifiers and power supplies; cooling water for solenoids, RF equipment, beam-bunchers, cryo-compressor and pumps, cooling tower; new distribution piping, pumps and controls; refurbished piping and heat exchangers that exist at 2 o'clock; and ventilation for cooling and ODH compliance.

The high-voltage power supply was installed outside Building 1002B on a concrete pad, and was grouted in place (see Figure 3). The wiring installed was side-entry to minimize the risk of water intrusion, and a traffic barrier was installed. The power supply contains 215 gallons of Cross Grade 206 mineral oil and secondary containment was not required. However, a spill kit in the area was installed for a calculated "spill area" estimated to be 180 sq. ft.

Figure 3 – High Voltage Power Supply

Pump room and Cryo room modifications (see Figure 4) included

- Overhauled Pumps
- New pump variable speed drives
- New and refurbished piping
- New lighting
- He pump skids
- He compressor
- He control panel
- New cryo piping

Figure 4 – Pump Room and Cryo Room Modifications

The new modular-structure-style Laser Building (see Figure 5) includes a Laser room with provision for an optical table, space for racks and power, a dressing room, and "clean room" style HEPA filtration. It is proximate to the experimental area and requires separate power feed

from 1002B. The modular-structure-style Laser Building is compliant with DOE STD-1088-95 “Fire Protection for Relocatable Structures”, which prescribes proximity limitations to other structures.

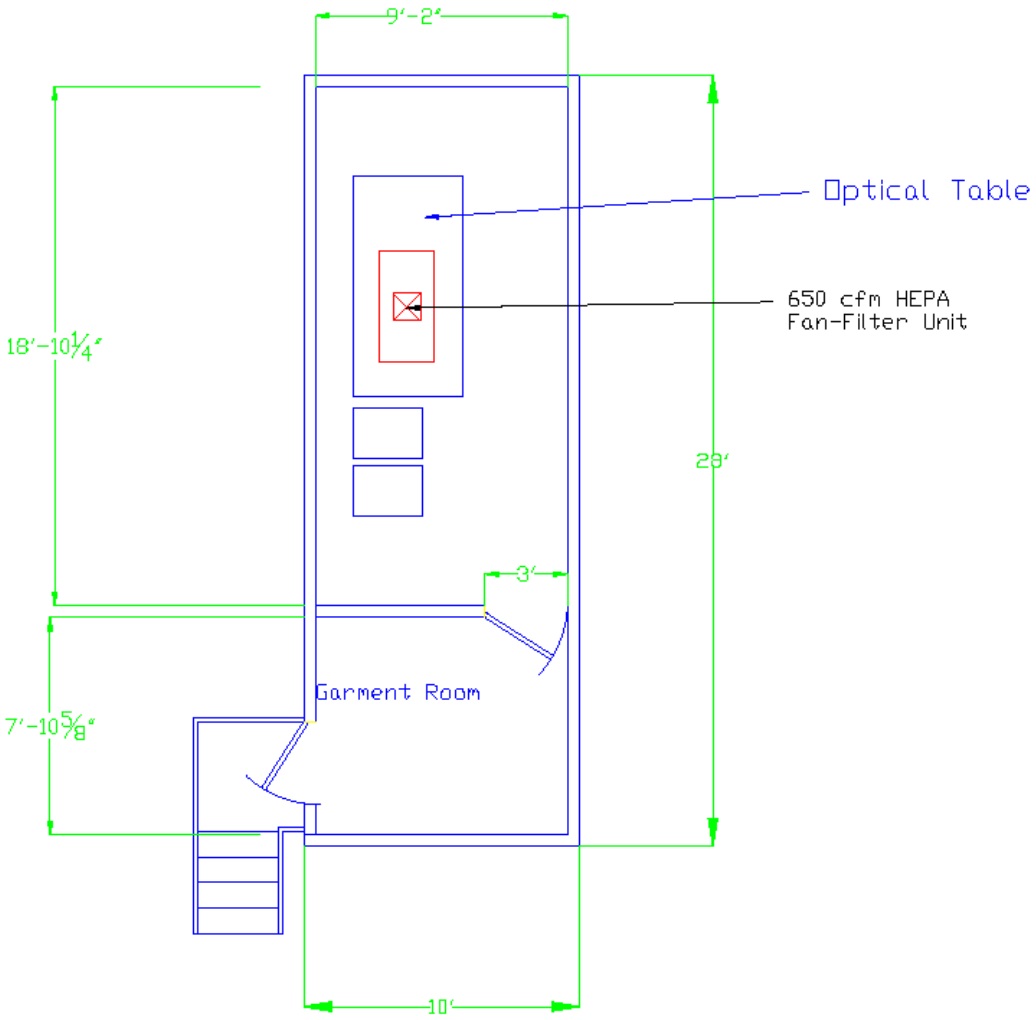

Figure 5 - Modular Laser Building

Conduct of Operations

The commissioning and operating organization for the CeC PoP Experiment is described in C-AD OPM. Specific written procedures in OPM Chapter 22 will state CeC PoP goals for operations, safety, the means to achieve them, and the controls instituted. C-AD provides overall practices and organizational roles, responsibilities, authority, and accountability for CeC operations in other Chapters of the C-AD Operations Procedure Manual (C-AD OPM). For example, C-AD provides the methods for approving, posting, maintaining, and controlling access to operations documents (procedures, drawings, schedules, maintenance actions, etc.). Another

example is establishing and implementing operations practices to ensure operators are alert, informed of conditions, and properly operate equipment, and that they address established work planning, electrical safety, cryogenic safety, personal protective equipment, training, qualification, and notification practices such as reporting changes in status, abnormalities, or difficulties encountered in performing operations tasks.

Specific operations procedures in the OPM for the CeC PoP Experiment address

- CeC PoP organization and administration
- CeC PoP operating practices (e.g., CeC PoP physicists or operator duties)
- Control Room activities
- Notifications to C-AD management
- Control of CeC PoP equipment and CeC PoP status
- CeC PoP log-keeping practices
- Interrelated RHIC and CeC PoP practices for operations
- CeC PoP technical procedures

General C-AD OPM operations procedures relevant to CeC PoP operation address

- C-AD policies for organization and administration
- C-AD operating practices (e.g., emergency response)
- Control Room activities
- Communications
- Training and qualification of operators
- Investigation of abnormal events, conditions and trends
- Notifications
- Control of C-AD accelerators and status
- Lockout and tagout of hazardous energy
- Independent verification / assurance practices
- Operations practices for logkeeping
- Work turnover and assumption of responsibilities for accelerators and accelerator facilities at C-AD
- Control of interrelated processes (e.g., cryogenic system operations)
- Required reading for safe operations
- Timely instructions to accelerator facility operators
- Technical processes (e.g., RHIC beam operations)
- Operator aids practices
- Component labeling/identification practices
- RHIC ASE procedure

CeC Experiment Layout and Equipment at RHIC

Layout

The layouts of the CeC PoP support facilities at RHIC 2 o'clock and the CeC PoP equipment are shown in Figures 6-9.

The CeC PoP support facilities include:

- Local control room
- Laser room
- Power supply building
- Transformer yard
- Utility building with cooling-water system and cryogenic compressor
- RHIC IP2 tunnel with crane

The CeC linac equipment includes:

- Forty (40) m of warm bore conventional beamline
- One (1) 112 MHz superconducting RF gun with photocathode
- Two (2) 500 MHz normal conducting cavities for beam bunching
- One (1) 704 MHz superconducting RF cavity to accelerate electron
- Beam transport vacuum pipe
- Modulator section where hadron beam and electron beam interact
- Bending magnets to dump the electron beam safely
- Two (2) independent cryogenic elements
- Helium pipes and platform
- One (1) permanent set of wiggler magnets (undulator/FEL)
- Twenty-nine (29) warm bore magnets
- Two (2) beam dumps
- Various beam instrumentation elements
- Power supplies

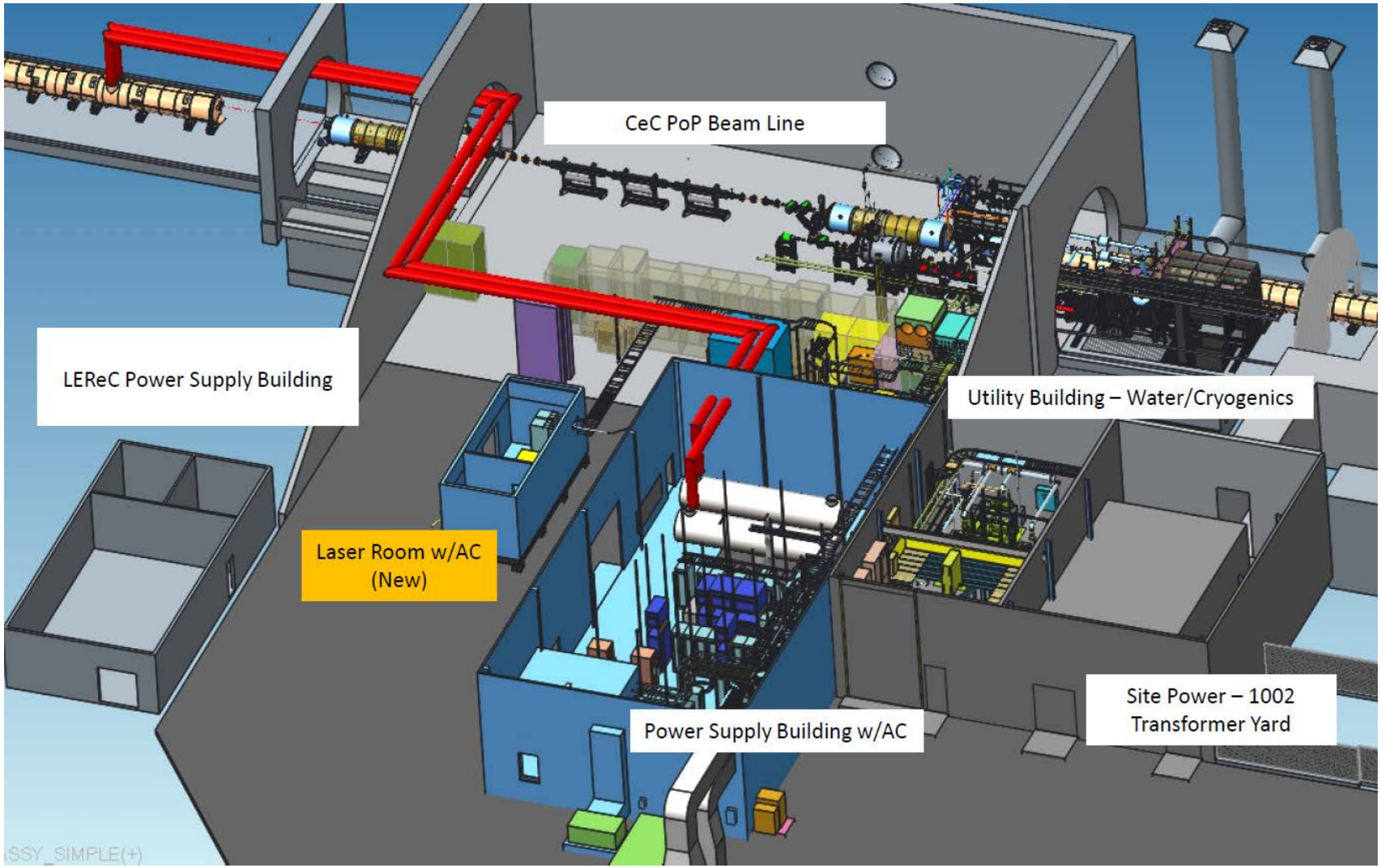

Figure 6 – Layout of Coherent Electron Cooling Support Facilities at RHIC 2 o'clock Region

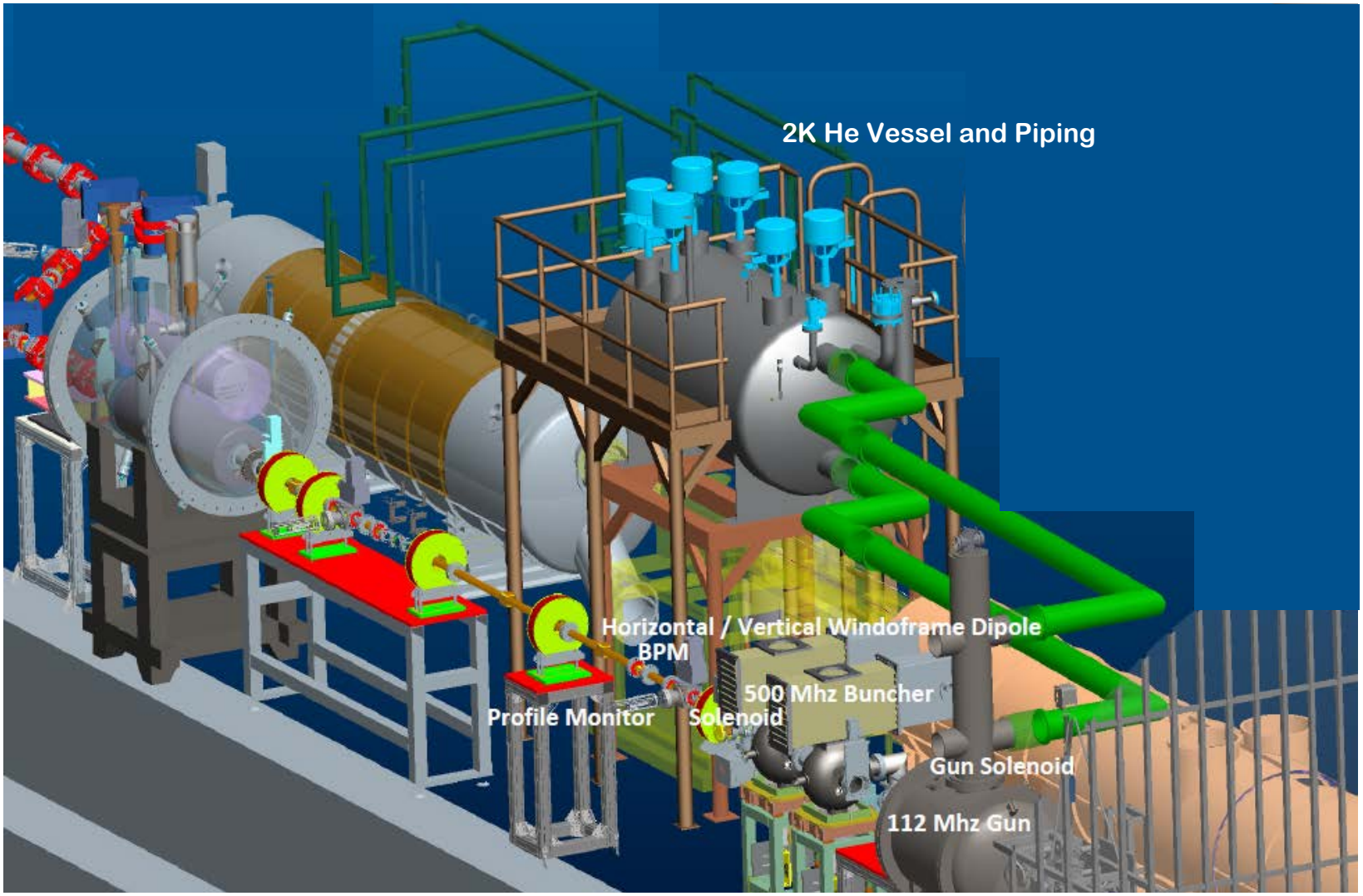

Figure 7 – Layout of Coherent Electron Cooling Experiment in RHIC Tunnel Showing 2K He Vessel and Piping

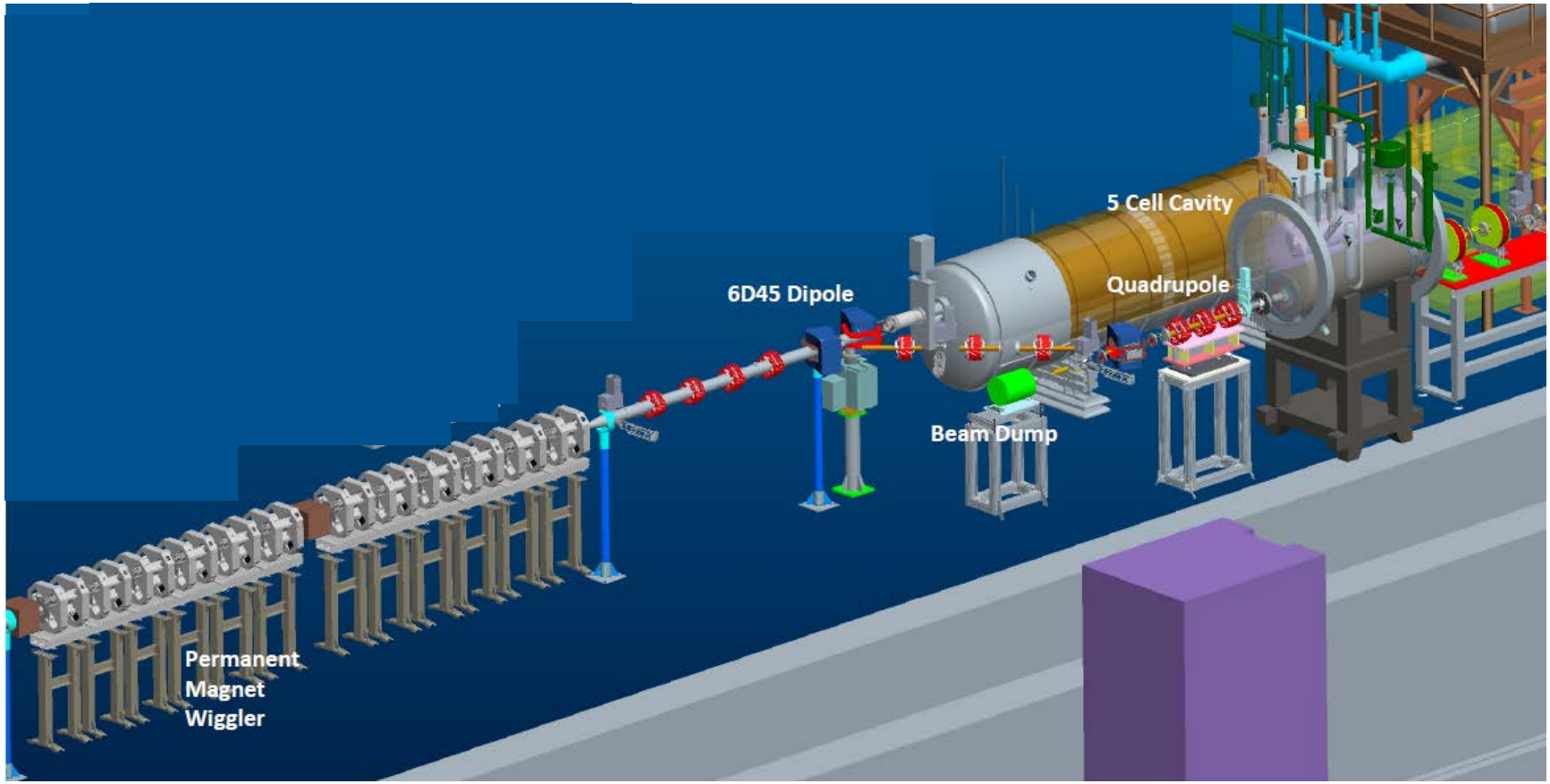

Figure 8 – Layout of Coherent Electron Cooler Experiment in RHIC Tunnel Showing Location of Wiggler

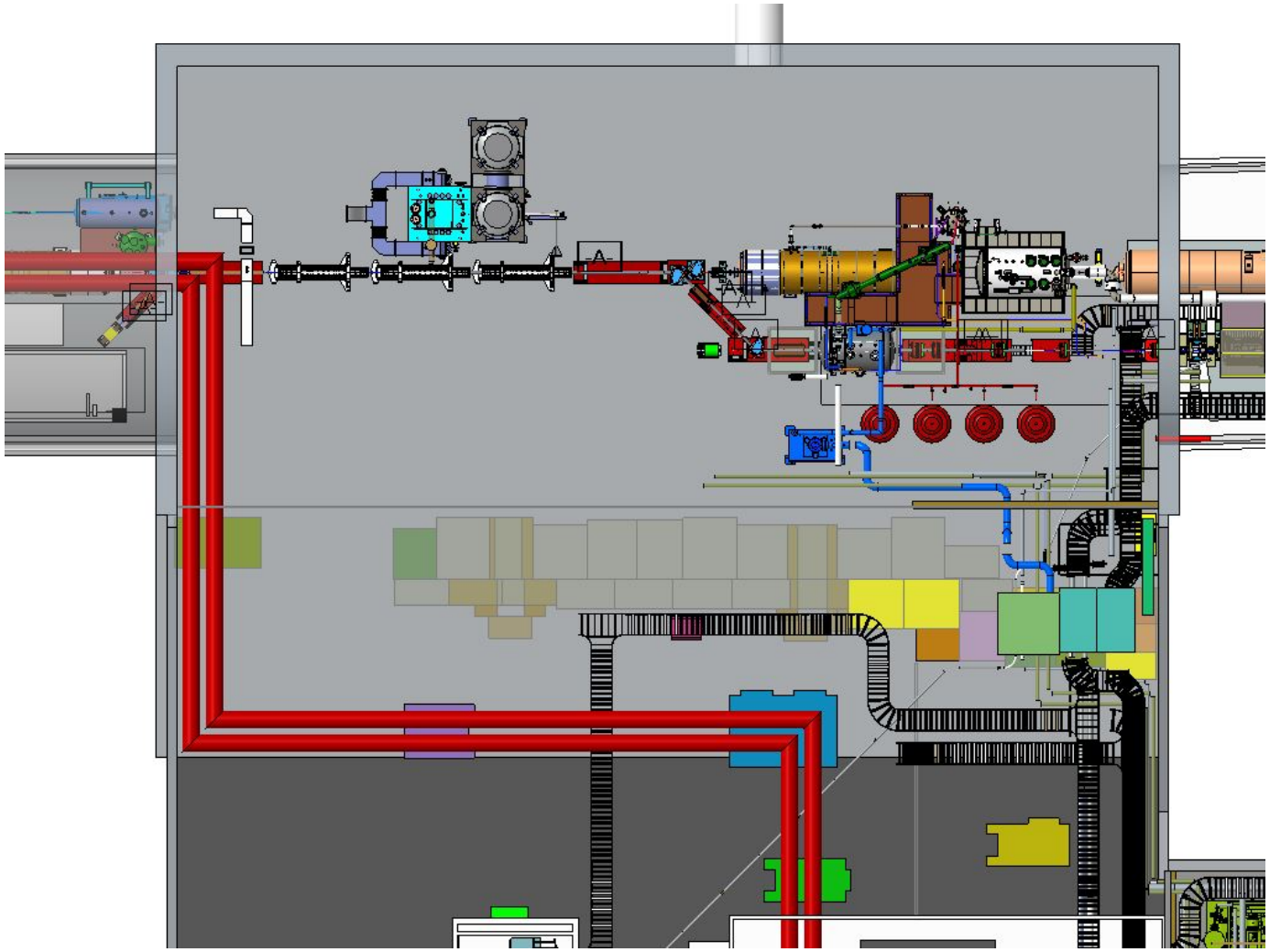

Figure 9 Plan View of CeC PoP Accelerator Layout in RHIC Tunnel

RF Systems

There are two (2) superconducting RF (SRF) systems and one (1) normal conducting RF system in the CeC linac accelerator:

- A Quarter-Wave (QW) resonator type SRF gun, operating at 112 MHz. This gun will generate 2-MeV, high charge (several nC), low repetition rate (78 kHz) electron beam
- Two normal conducting 500 MHz single-cell buncher cavities, on loan from Daresbury Lab; the beam-accelerating capability of the each 500 MHz buncher cavity is less than 300 kV, which is an experimentally determined value
- A 704 MHz 5-cell SRF cavity to boost the energy of electrons to 22 MeV

RF power amplifiers and LLRF electronics (see Figure 10a) are located in Building 1002A outside the RHIC tunnel. A local RF control room is located in the building for local RF testing. The RF distribution system in the RHIC 2 o'clock region is shown in Figure 10b.

Figure 10a Portion of CeC RF Amplifiers and Electronics in Building 1002A

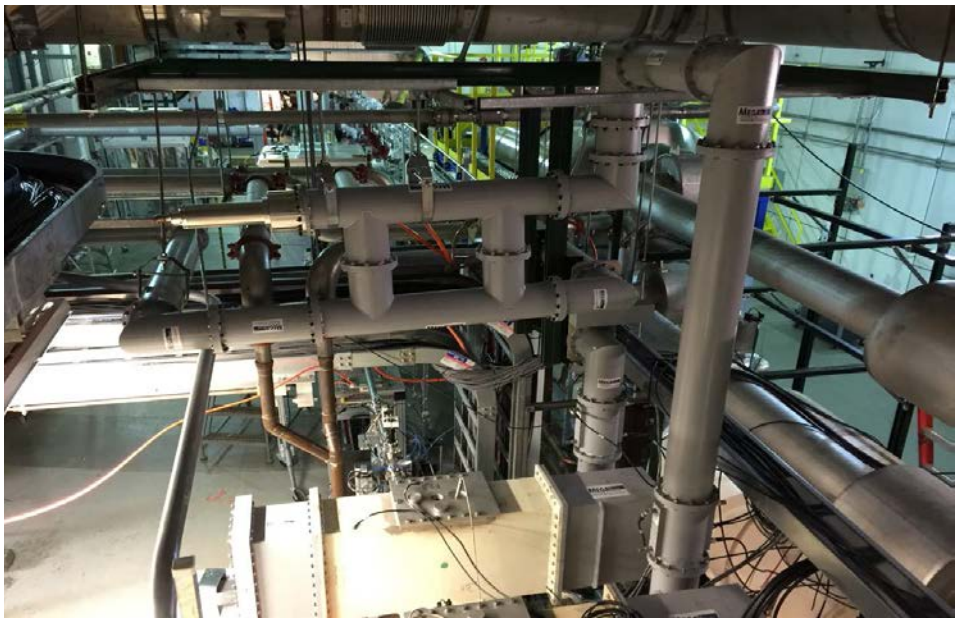

Figure 10b Portion of CeC RF Waveguide Distribution System in RHIC 2 o'clock Region

The power to the normal conduction bunching cavities will be 35 kW, although 50 kW is available. The power will be transmitted via a fundamental power coupler, which is of waveguide-type, coupled to the buncher cavities via a port at each cavity top, sealed with a disk ceramic window. See Figure 10c.

Figure 10c - Photograph and Illustration of Buncher Cavities during Cleaning and Refurbishing at BNL, and Buncher Cavities Connected at CeC

Two superconducting RF (SRF) cavities will be located at CeC as shown in Figure 11. The power to the 112 MHz superconducting RF gun will be 2 kW. The power to the 704 MHz 5-cell SRF cavity will be 20 kW.

The 112MHz SRF photocathode gun will operate at 4.2 K liquid helium and one 704 MHz 5-cell will operate in 1.9 K super fluid. Analysis of the cavities indicates they will operate safely with in planned operating criteria. The vacuum envelopes of both cavities are ASME code stamped pressure vessels. All ambient boundary pressure relief devices are code stamped burst disks, located on the helium volume, the insulating vacuum volumes, and the UHV beam tube volume of each cryostat assembly. Analysis and code stamped vessels and relief system assures compliance to 10CFR851.

The 112MHz SRF photocathode gun cavity cryostat was successfully tested by the contractor without incident. The temperature of the stalk and FPC are controlled with a temperature maintained fluid loop that has provision to guard against freeze up and all lines conform to ASME B31.3, Process Piping. The stalk and cathode injection system were tested by the vendor to prove out operation. A track that is anchored to the floor eliminates any tipping hazard.

The superconducting 112 MHz QWR was developed originally for electron gun experiments by collaborative efforts of BNL and Niowave, Inc. The 112 MHz RF is a harmonic of RHIC's 28 MHz, so that it can be used for electron cooling experiments at CeC PoP Experiments that involve the RHIC beams. The gun produces long bunches, which reduces the space charge effect. The cavity has a short accelerating gap that creates an almost constant accelerating field for electrons. The superconducting cavity is suitable for CW, high-average-current beams. The cathode is not mechanically connected to the RF structure, which allows flexibility in cathode types. See the illustration in Figure 12.

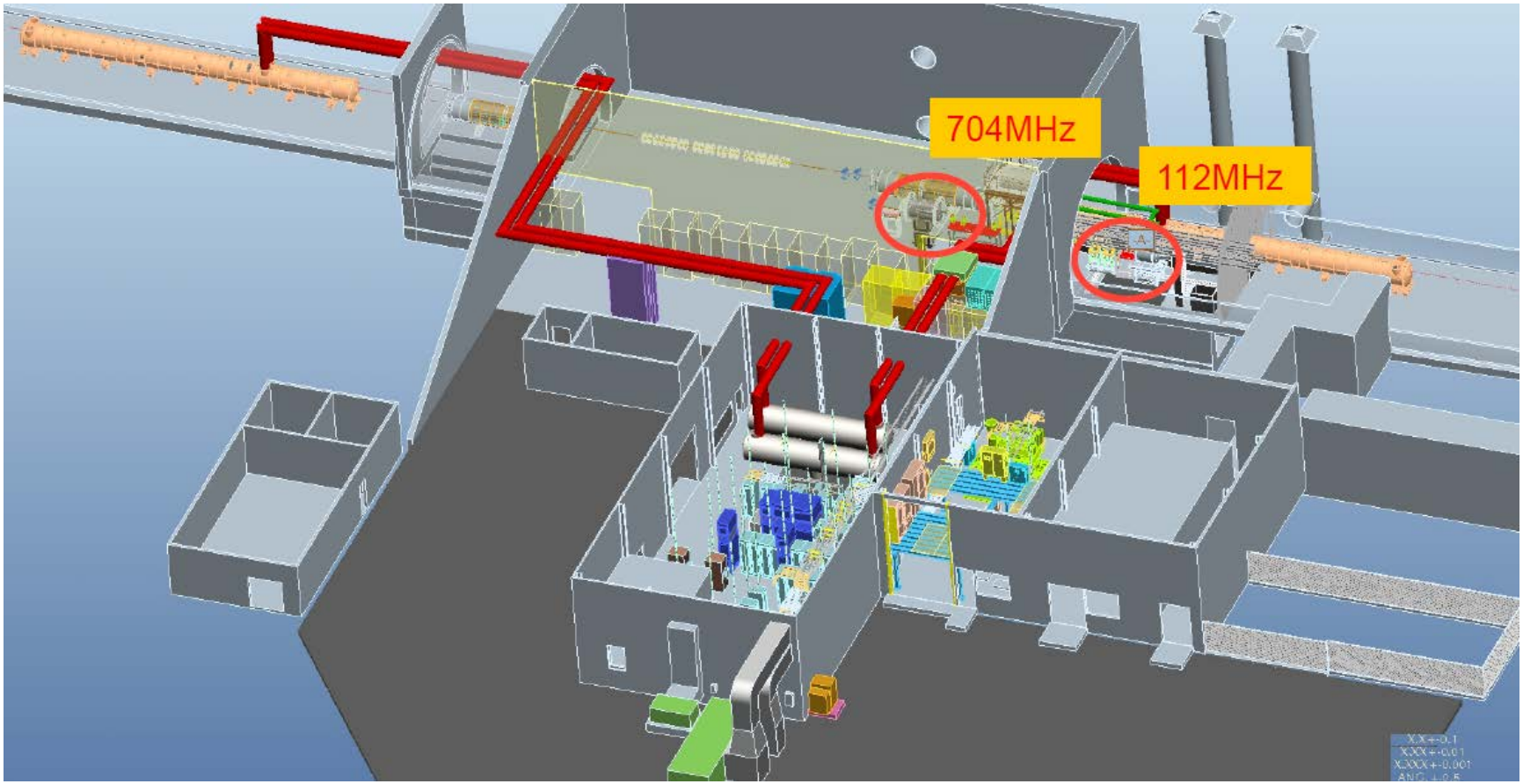

Figure 11 – Location of SRF Cavities at IP2

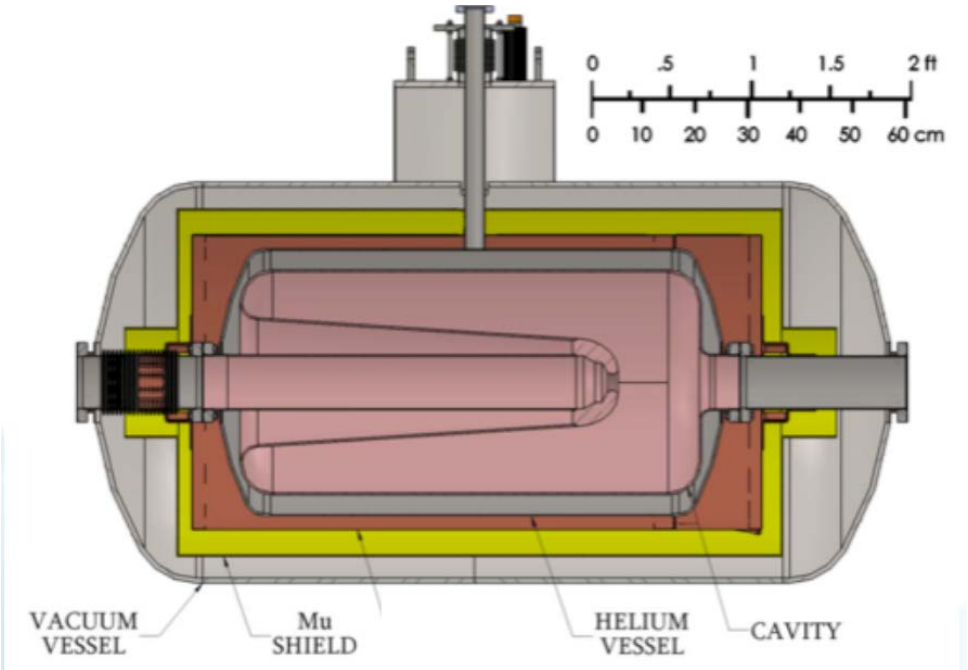

Figure 12 – 112 MHz QWR Cavity Illustrated and Photo of 112 MHz Cavity-Cryostat System.

Examples of photocathodes to be used in the electron gun are cesium potassium antimonide and a metallic cathode with a diamond amplifier. The bunch charges will be less than 25 nanoCoulomb (nC) with repetition rate adjusted to maintain the allowable beam power with the given beam energy. The maximal charge is defined with 10% photocathode quantum efficiency, 1 kW peak power of the drive laser, and 500 picoseconds pulse duration. That is, 10% efficiency is experimentally the best efficiency observed and 25 nC is the maximum projected bunch charge. Also, space charge effects occur at higher bunch charges, which is another limiting aspect of the design.

The gun is capable of producing maximum beam energy of 2.5 MeV, which is limited by the available heat load on the liquid helium system.

In all experiments, beam power will be within an operations envelope that is less than or equal to the safety envelope (see Table 2). The safety-analysis envelope for the gun was assumed to be 2000 W. However, the nominal beam power is 780 W. The control of the beam power will be done through the setting of the photocathode drive laser, pulse energy and repetition rate.

The hardware limit on the beam power (2500 W) from the gun is set by the available RF power from the 2000 W amplifier with 25% added due to possible acceleration of the electron beam in the bunching cavities. The maximum bunch repetition rate is 78 kHz.

For installation in RHIC, the "gun-cavity helium-vessel vacuum-vessel" modifications were necessary (see Figure 13):

- Low carbon steel vacuum vessel was replaced with a stainless steel ASME Section VIII code stamped vessel, which is the pressure boundary
- A cryo-tower to interface with RHIC cryogenics system
- A frequency pre-tuning mechanism
- Re-designed cavity supports
- A low RF loss, low heat load cathode stalk
- A load-lock system for multi-alkali photocathodes
- A combined function FPC/tuner assembly
- Copper plated stainless steel bellows and beam pipes to reduce RF losses

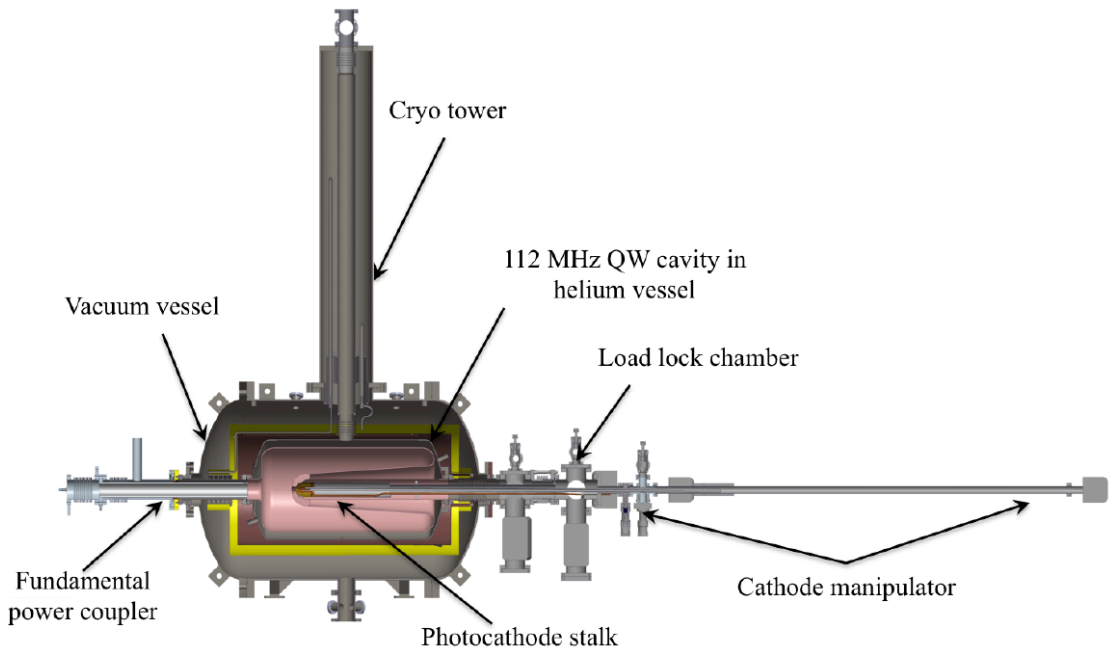

Figure 13 – Electron Gun and 112 MHz QWR Assembly

All reliefs in the helium systems are ASME rated and are properly sized to vent the helium safely if there is an overpressure. Figure 14 shows reliefs for the 112 MHz. RF systems.

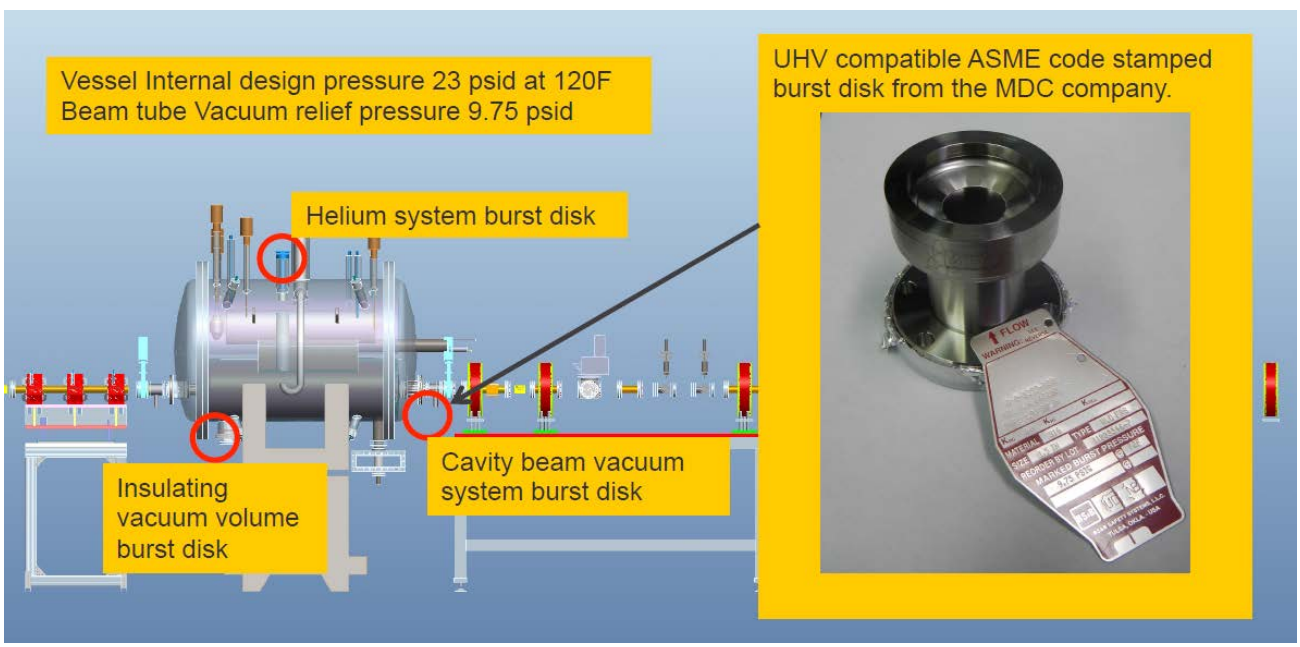

Figure 14 – Reliefs for the 112 MHz SRF Systems

The 704 MHz accelerating cavity (see Figure 15), is a 5-cell SRF cavity originally developed by AES Inc. for high-current applications such as e-RHIC. Ports at each cavity for higher-order mode (HOM) couplers will be blanked off in the CeC linac as there is no need for HOM damping. A second 704 MHz accelerating cavity and a cryomodule from Niowave were built. The better of the two cavities for this application was the AES cavity and it was integrated into the Niowave cryomodule for CeC PoP Experiments. The cryostat vacuum vessel is ASME BPVC VIII Division 1 U-Stamped.

Engineering analyses were performed and are maintained by C-AD for this device:

- Support Rods Mechanical Analysis
- Tuner Design Report
- Cavity/Helium Vessel FEA Report
- Internal Piping ASME B31.3 Pipe Stress/Flexibility Analysis
- Vacuum Pressure Vessel Relief
- Cavity Volume and Helium Vessel Relief
- Cryogenic Safety Valve Spring Constant
- Phase Separator Mechanical Analysis
- ASME Boiler & Pressure Vessel Code Section VIII Div. 1 Calculations

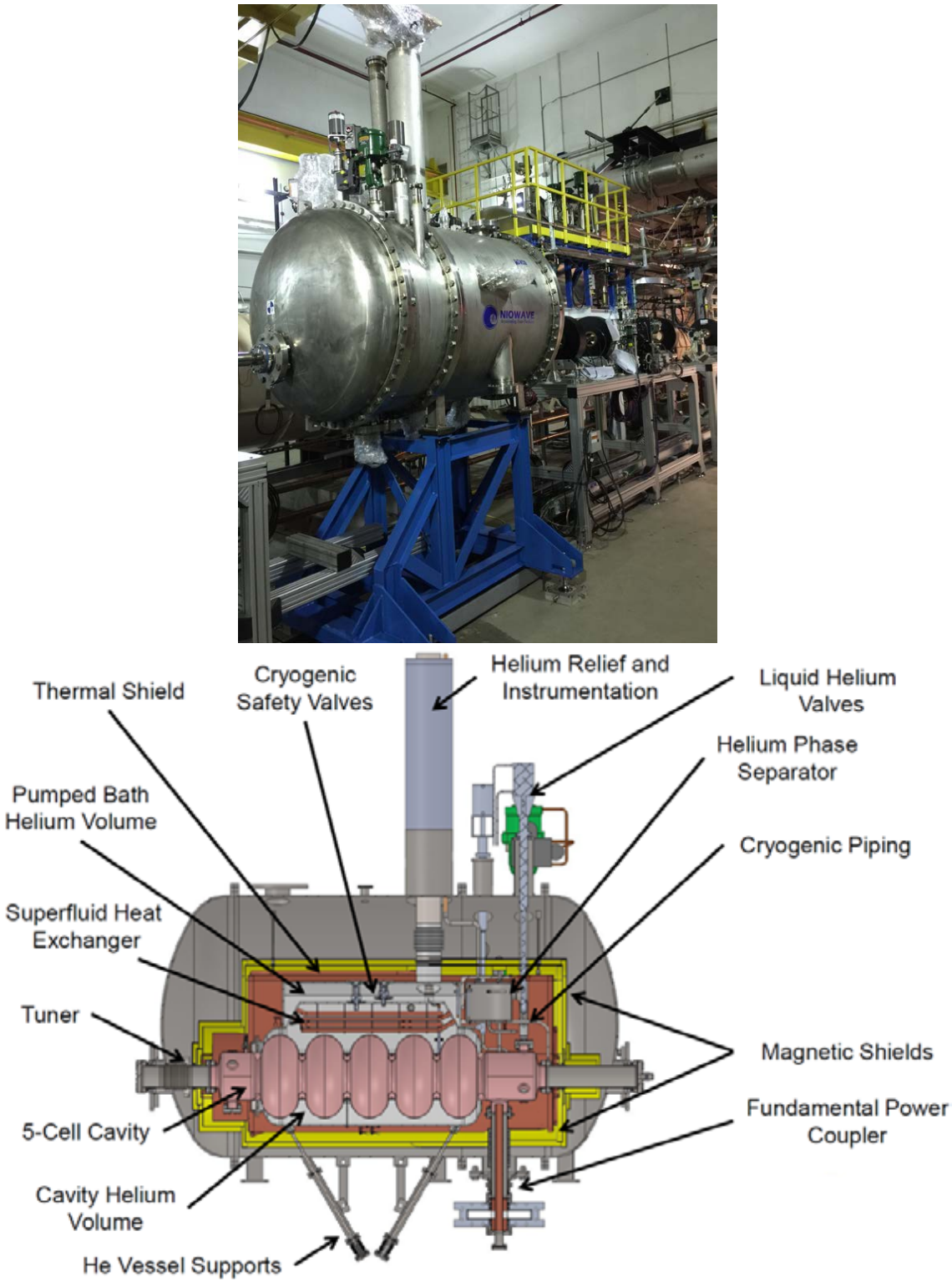

Figure 15 – 704 MHz SRF Accelerating Cavity at IP2 and Illustration

The operating temperature of the 704 MHz cavity is 1.9K. It has a 20 MV accelerating voltage. The available RF power is 20 kW. The cavity will be in a helium bath at 23 psi.

The vacuum vessel around the helium vessel will be the pressure boundary and it is an ASME code-stamped vessel. The energy gain in the 704 MHz cavity is up to 21 MeV. Thus, equipment capability for CeC PoP devices limits the maximum beam energy to 24.1 MeV and maximum beam power to 20,000 W.

Since the cavities may produce x-rays without electrons from the cathode of the electron gun, access is not permitted in this section of the RHIC tunnel if the cavities are energized with RF power. The layout of all RF cavities used at CeC PoP is shown in Figure 16. The controls for the x-ray hazard include safety sweeps to remove personnel from the area, access-prohibiting sectionalizing gates, and an RF key tree associated with RF powering devices to ensure personnel are not present when the RF is on at IP2.

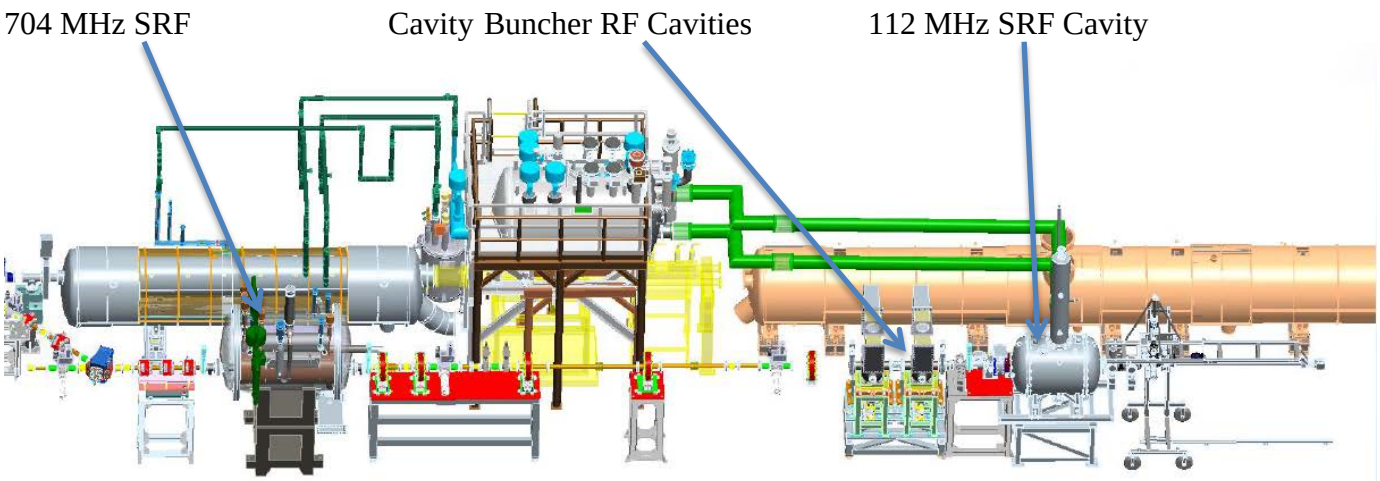

Figure 16 – Layout of RF Accelerating Cavities at CeC

Cryogenics System

The 4.4K cryogenics system for CeC PoP consists of the following elements:

- Liquid helium supply: RHIC interface, phase separator and supply line
- Quiet helium source: condenser plus valve box cryostat
- 112 MHz QW SRF gun cryostat
- Cryogenic transfer lines
- Small helium compressor
- Warm piping system and relief header
- Instrumentation, controls and power
- ODH monitoring and alarm systems
- Noise abatement
- Oil containment

The 2K cryogenics system for CeC PoP consists of the following elements:

- Cryogenic transfer lines: supply to 704 MHz 5-cell cavity cryostat

- 704 MHz 5-cell cavity cryostat with isolation superfluid heat exchanger, recovery heat exchanger, phase separator and valves
- Return transfer line to heating system
- 18 mbar vapor return electric heating system
- Warm return piping system
- Vacuum pumping system
- Instrumentation, controls and power

Liquid helium is supplied to the CeC PoP system from a local tap off the RHIC cryogenic distribution system. See Figure 17. Any oscillations from the RHIC distribution system will be buffered by the RHIC-interface phase-separator's vapor volume. The helium vessel in the phase separator is an ASME BPVC Section VIII Division 1 U-stamped pressure vessel operating at 290 psia at 120 ^{o}F. The cryostat vacuum vessel is engineered to ASME BPVC Section VIII Division 1 but is not U-stamped. Reliefs are ASME rated. Internal piping meets ASME B31.3 piping code.

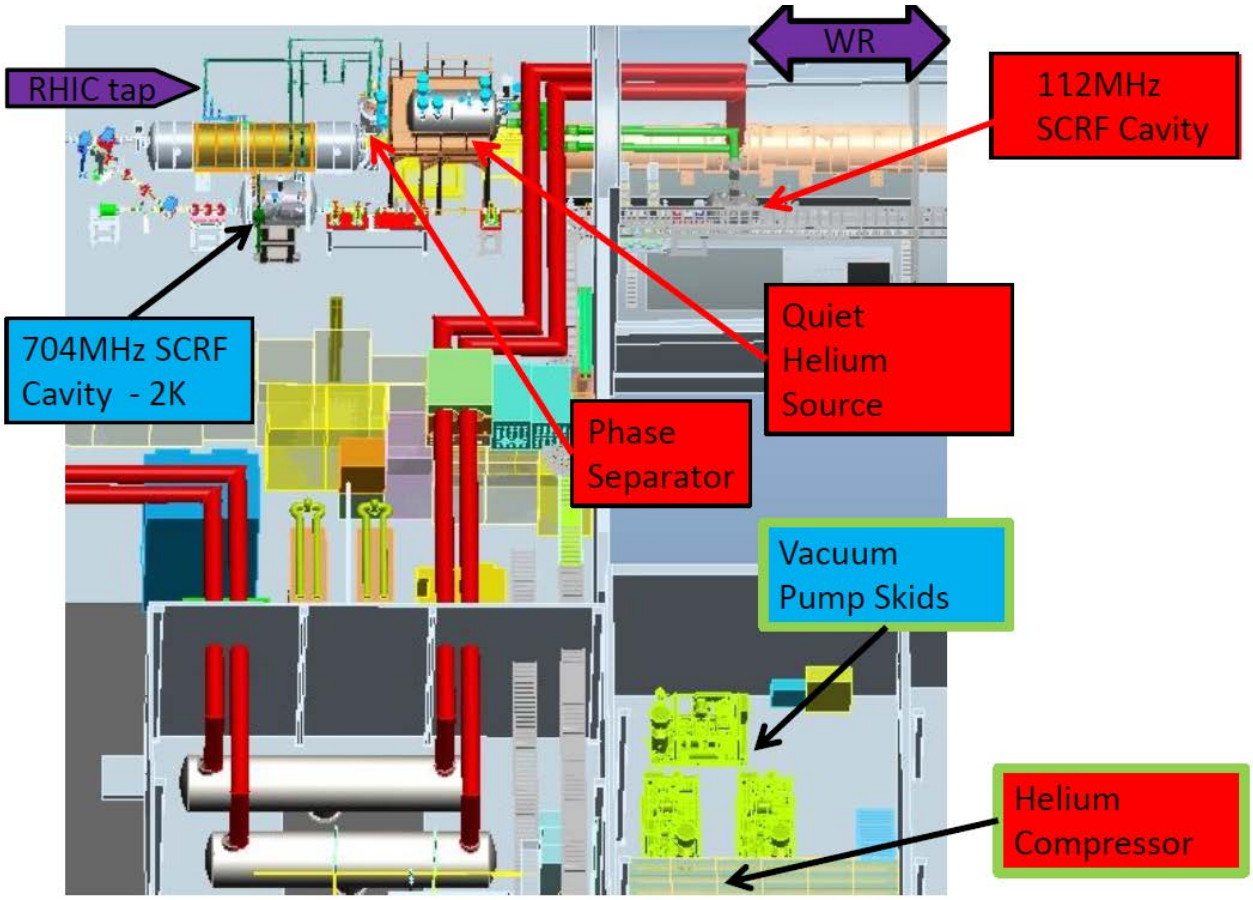

Figure 17 – Layout of Cryogenic Systems at CeC

Figure 17 shows the Quiet Helium Source that provides low-temperature helium (1.9K), which is on a platform just above the RHIC ring. All piping meets ASME Code B31.3. The total inventory of helium in the CeC PoP cryogenic systems is given in Table 4.

Table 4 – Inventory of Helium in CeC Cryogenic Systems

	Operating Conditions, i.e., Temperature, Pressure	Helium Inventory (rounded to 2 significant figures) Liquid Volume He Equivalent (liters) and Volume of He Gas at 1 bar and 15 ^{o}C (SCF)	
		Liters	SCF
RHIC Interface Phase separator	4.65K, 1.45 atm	80	2160
112 MHz Cavity / helium vessel	4.4K, 1.2 atm	70	1890
QHS Condenser system	4.3K, 1.1 atm	150	4050
704 MHz Cavity / helium vessel	2K, 18 Torr	250 (budget)	6750
Piping, 18 Torr return	300K, 1.5 atm	40 (budget)	1080
Piping, 1 atm Return, Vacuum pumps discharge side	300K, 1.5 atm	4.0(budget)	108
Piping, HP return to WR header, helium compressor high side	300K, 16 atm	50 (budget)	1350

If an oxygen deficient atmosphere occurs due to a failure in the RHIC superconducting magnets, the RHIC ventilation fans start up when ODH sensing devices signal less than 18% oxygen, or when the vacuum space in the cryostats of RHIC magnets sense pressure. Pressure sensors in RHIC magnet cryostats are Credited Controls in the RHIC ASE. Additionally, the RHIC cryogenic system is sectionalized and sectionalizing valves close to prevent the entire inventory of helium into the RHIC tunnel.

A failure in the helium systems associated with the CeC PoP cryogenic system was reviewed by the Laboratory ESH Committee.[6] ODH analyses were done for two areas: the tunnel, which is covered by the RHIC ODH analyses, and Building 1002A that houses the CeC QHS helium compressor and vacuum pump skids. Based on a scenario of instantaneous depressurization of liquid helium due to a failure of a pressure boundary in Building 1002A, the area was classified as ODH 0. Building 1002A has an ODH sensor and a safety system with a 3,000 SCFM fan. The fan is tested the same as RHIC

[6] LESHC Minutes of Meeting 13-14, August 15, 2013. Password is oper8

ODH safety systems in the RHIC valve-box service-buildings. The layout of the compressor room is shown in Figure 18.

Noise and startle hazards include the reliefs in Building 1002A and in the RHIC Tunnel, and the helium compressor and vacuum pumping skids in Building 1002A. These standard industrial hazards were addressed during LESHC meeting 13-14. Standard OSHA hazards associated with the platform for the phase separator were also addressed at that LESHC meeting. Facility Risk Assessments and Job Risk Assessments are used to ensure controls reduce the risks to acceptable levels. Work Planning and Control is used to ensure hazards are identified, controls are in place and worker feedback is obtained.

Double hearing protection will be worn where the noise level is 85 dB or greater in 1002A. Railings, ladder and platform comply with OSHA requirements in 1002 tunnel IP. See Figure 19.

BLUE SKIDS: TUTHILL VACUUM PUMPING SYSTEM

Figure 18 – 1002A Compressor Room Equipment

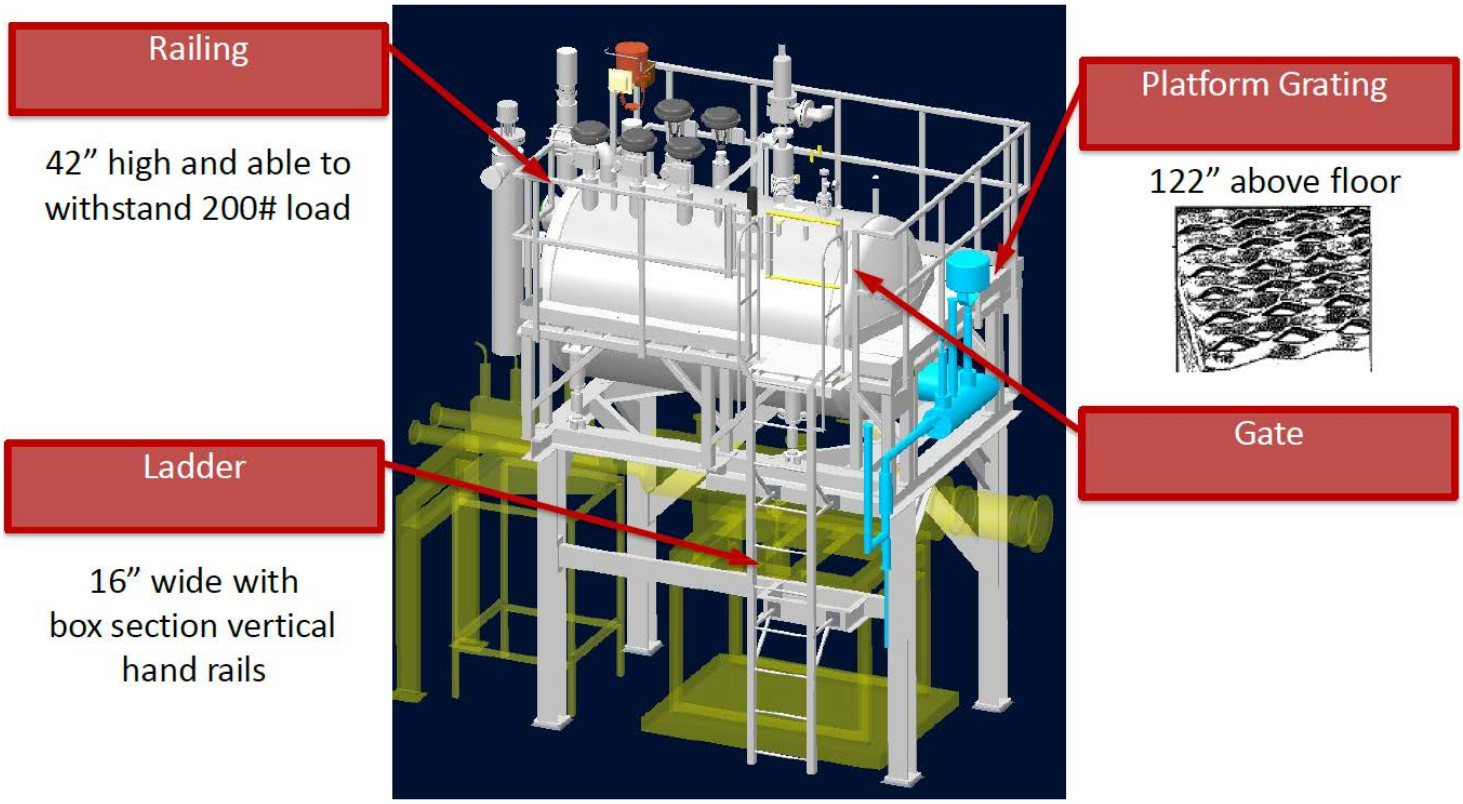

Figure 19 – Illustration of Quiet Helium Source and Platform above RHIC Ring in IP2

Power and Electrical Systems

The five main dipole magnets are connected in series. All other magnets / windings are individually connected. The quad trim windings are configured as either horizontal or vertical correctors. There are a total of 48 power supplies and all are controlled via Ethernet. Power supply parameters are listed in Table 5. Views of the magnets are seen in Figure 20.

Fuses and circuit breakers are coordinated. The experiment required changes to the electrical infrastructure and the affected electrical infrastructure meets the NEC. Strain relief provisions were included in all cables and wires, which were secured as necessary to prevent damage or insulation failure from vibration, pinching, chaffing, Correct electrical hazard labeling and signage were installed, and LOTO procedures were updated in the C-AD OPM.

All magnets are of standard design used at BNL accelerators. Any non-NRTL equipment is EEI inspected as required by SBMS. Beam deflections from incorrect magnet current conditions were reviewed by the C-AD RSC and are covered elsewhere in this analysis.

Table 5 – CeC PoP Power Supply Parameters

Function	Quantity	I, Amps	V, Volts	Stability
Main Dipole	1	167	30	± 100 ppm
Quadrupoles	16	10	20	± 50 ppm
Large Solenoid	1	10	40	± 50 ppm
Small Solenoid	5	10	40	± 100 ppm
Correctors	6	± 5	± 10	± 100 ppm
Dipole & Quadrupole Trims	19	± 1	± 20	± 100 ppm

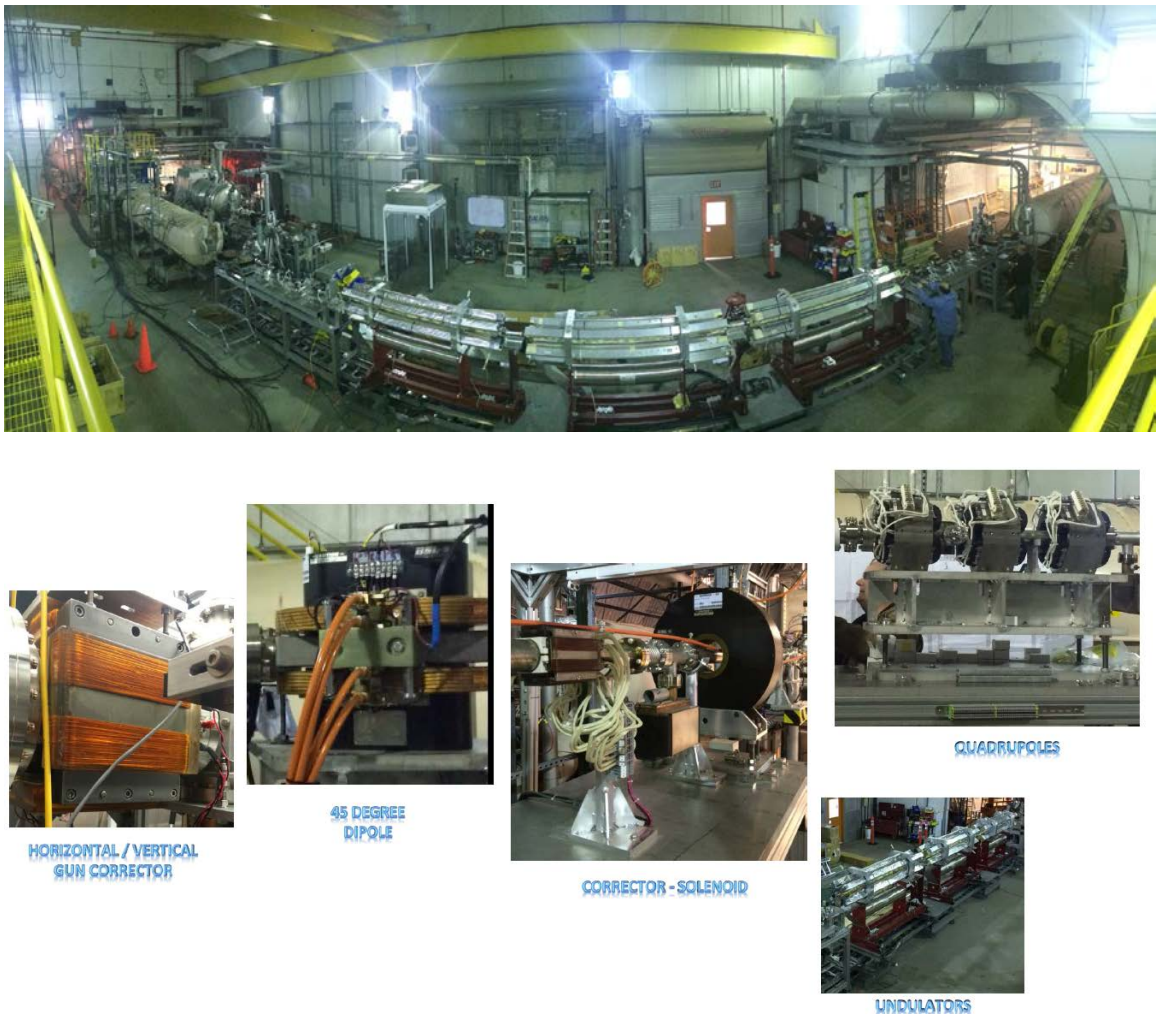

Figure 20 - Views of the Magnets at CeC PoP Experiment

The five main dipole magnets are connected in series. All other magnets and windings are connected to individual power supplies. The quad trim windings are configured as either horizontal or vertical correctors. There are 15 undulator power supplies and two SRF trim supplies, and the total power supply count is 65. All power supplies are controlled via Ethernet.

There are only two types of magnet power supplies in CeC PoP Experiment and both are commercial off-the-shelf supplies made by CAEN in Italy and BiGen. The CAEN regulators and TDK-Lambda bulk power supplies have been individually EEI inspected. The three components of the BiGen supplies (Ethernet PS Controller, Genesys PS, and DCCT chassis) are EEI inspected.

There is magnet current monitoring for control of beam deflection. The current in the main dipole string and the last two quads are monitored by LEM closed-loop Hall-effect sensors. LEM is a company that provides high-quality devices for measuring electrical parameters. The LEM outputs are monitored by the Machine Protection System (MPS).

Beam Dumps, High Power and Low Power

High-Power Dump

The high-power water-cooled beam-dump was designed to absorb 8500 W of 22 MeV electron-beam power. The incident angle of beam into the high-power beam dump surface is 4 degrees (see Figure 21). The beam size striking the dump is about 20 mm in the horizontal plane and 25 mm in the vertical plane. A 4-degree grazing angle is used to bring the power density at the surface of the copper beam dump down to acceptable levels.

A thermal-stress analysis was based on symmetrical beam with 20 mm sigma for two conditions: centered and vertically offset 1.5 cm. A BPM will determine actual beam position. If a centered beam becomes too small or too large, the BPM will not detect this. However, temperature sensors (thermocouples-4 and Klixons -4) on the dump (2 up, 2 down) and beam pipe (2 left, 2 right) will be used to detect off-center beam and/or overly defocused beam. Additionally, the last quadrupole current will be monitored to keep beam size within an operating window. In addition to withstanding the thermal-stress, the copper dump was designed to stay well below the critical heat flux[7] at the Cu-water boundary (see Figure 22), and to withstand thermal fatigue.

[7] Critical heat flux (CHF) refers to the heat transfer limit causing a sudden rise in surface temperature and possible catastrophic failure (burnout) of a device in which evaporation or boiling is occurring.

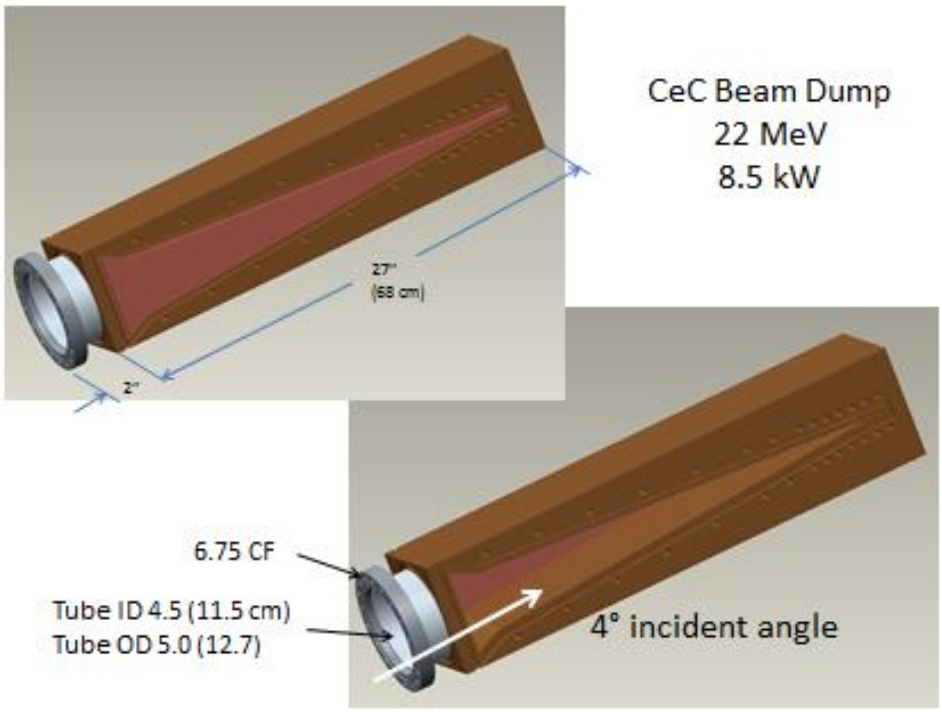

Figure 21 – Illustration of High-Power CeC Beam Dump

Figure 22 – High-Power CeC Beam Dump with Cooling Channels

The maximum steady state thermal temperature of the dump is 40 ^{o}C at 8.5 kW. A vertically offset beam would raise the steady state maximum temperature to 57 ^{o}C. The copper water tubes are silver brazed so as to be adequate for a 200 ^{o}C bake-out temperature.

Low Power Dump

The beam dump is a cylinder of 1018 steel with a beam port. Figure 23 displays the beam dump with the 304 stainless steel beam pipe and window. The standoffs for the dump electrically isolate it from the stand. The ceramic spool piece electrically isolates the

beam pipe in the beam dump from the rest of the beam pipe. The window at the end of the pipe is tilted at a 45° angle.

The main body is made of 1018 steel with a 3.2 cm radius hole to accommodate a stainless steel beam pipe. The beam pipe is isolated from the steel by two O-rings. The dump and beam pipe are electrically isolated from the stands and other equipment so that the dump can also be used as a Faraday cup.

The beam dump was modeled in MCNPX for radiological calculations. The goal of the radiological calculations is to keep worker radiation exposures as low as reasonably achievable using shielding and other controls. Thermal and stress analyses were performed using ANSYS. The goal of the thermal analysis was to establish the maximum safe beam power into the beam dump so that the accelerator is properly protected either by administrative procedures or via the Machine Protection System (MPS).

The CeC project plans to operate with only 60 milliwatts (mW) of 2 MeV electron-beam into the low-power beam dump. All heat transfer calculations from beam energy deposition were done for 1 W of 2 MeV or 1 W of 22 MeV beam, and results in the following paragraphs can be scaled down a factor of 17 for routine operations.[8]

At 22 MeV the electron beam has sufficient energy to penetrate the window and deposit substantial energy into the beam dump steel. A center window temperature of 56° C is obtained in analysis for 1 W of 2 MeV electrons. In both cases, 60 mW operations does not overly heat or stress the dump; that is, there is sufficient conductive heat transfer.

Other issues for both beam dumps were reviewed by the RSC and are:

- Beam dump heating and cooling
- Ozone concentration in the air
- Air activation
- Soil activation
- Residual activity
- Shielding

These issues are documented in RSC minutes and summarized in a later section of this document.[9]

[8] CeC PoP Low Power Beam Dump Thermal and Stress Analysis, C. Pai, 9-11-15
[9] Radiation Safety Committee Minutes

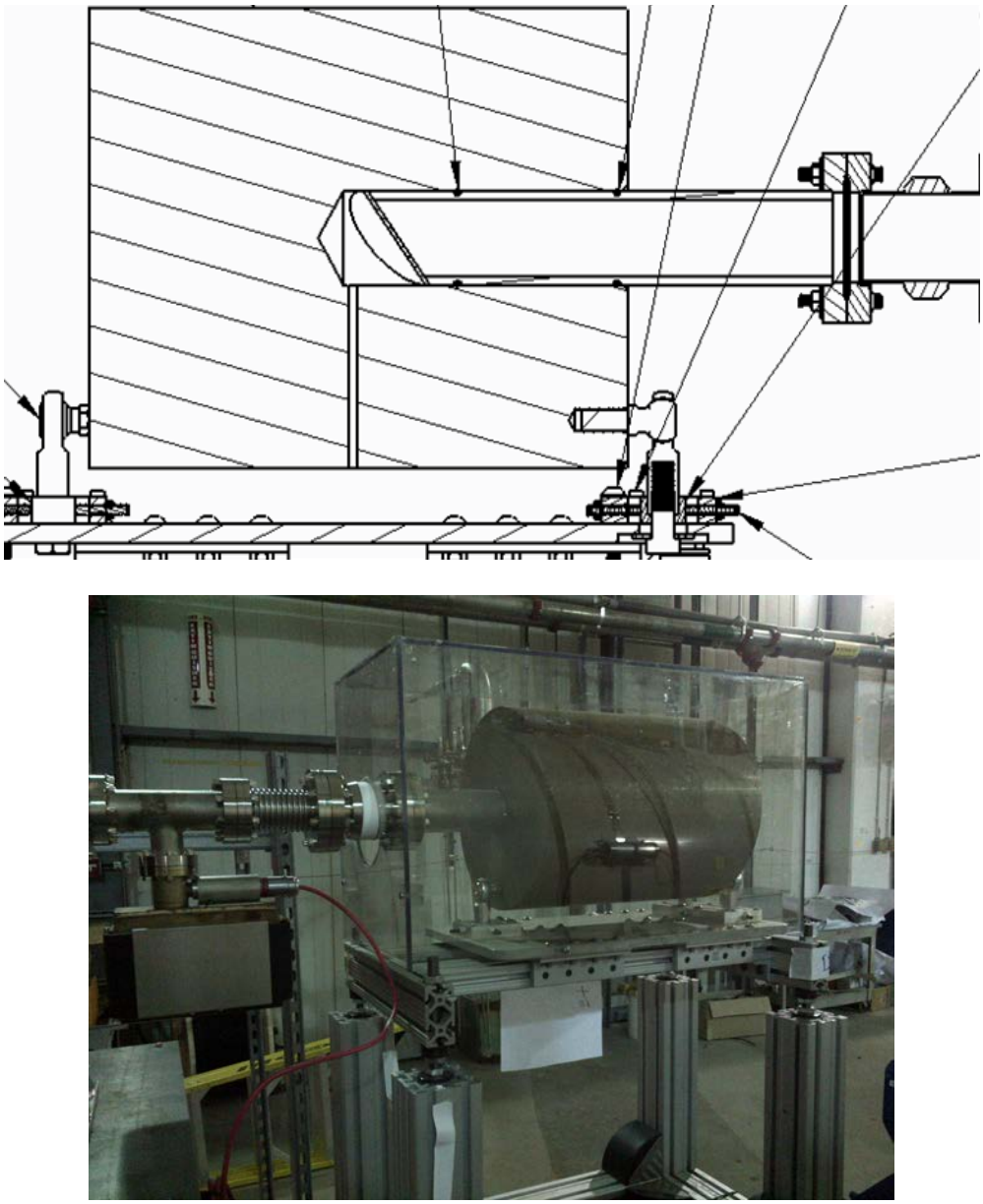

Figure 23: Drawing and Picture of the Low Power Beam Dump

Instrumentation

Instrumentation was installed in 3 Phases: 1) during testing of the gun and SRF cavity, 2) during testing with cathode and laser to produce beam, and 3) during final configuration testing. Instrumentation for the 2 MeV gun transport consists of two (2) beam profile monitors, two (2) beam position monitors, two (2) pepper pots that measure beam emittance, and one (1) current transformer. Figure 24 shows the instrumentation along the CeC PoP beam line.

Instrumentation in the downstream 22 MeV transport line includes seven (7) beam position monitors and two (2) beam profile monitors. One profile monitor is located in

the portion of the transport line leading to the CeC wigglers and the other is in the portion of the downstream transport line leading to the high-power beam dump. Additionally, there is an infrared camera to observe beam pipe heating, which indicates beam loss. The infrared camera would detect beam loss that photo-multiplier-tube beam-loss-monitors cannot detect.

The maximum beam power for the CeC radiation-safety analysis is assumed to be 2000 W, and the electron gun has an output expected to be 800 W. Full energy of 22 MeV would raise the beam power about another factor of 11, or about 8500 W. The risk of damage to the current monitors, beam position monitors and loss monitors is nil since these detectors do not interact directly with the electron beam. However, the damage to the pepper pot and profile monitors is possible and these will be inserted into the electron-beam only at low beam power, <1 W.

Personnel safety issues include use of lasers in beam pipes for alignment of the plunging heads of the profile monitors, and high voltage in parts of all the instrumentation. The alignment lasers are Safety Class 3a and less than 5 mW, which is a Safety Class used for laser pointers. The SHV connectors for the instrumentation are recessed and considered "finger safe." Specific instrumentation hazards are

- Alignment lasers: HeNe Class 3R laser (red), <5 mW
- Diode Class 3R laser (green), <5 mW
- N2 purged IR optics enclosure
- High voltage bias on PMT beam loss monitors
- Pinch points on motion control for inserting beam line devices
- Bias voltage on low power beam dump

A nitrogen purge is used to remove CO_2 contamination in the optics enclosure in the tunnel. There is boil-off from a N_2 Dewar that is located outside the tunnel. The optics enclosure has a bolt-down cover with a gasket. A N_2 flow meter will log data, and there will be a controlled leak rate into the vent line return in the tunnel. The feed lines from the Dewar will be flow limited.

Pneumatic actuators that insert devices into the beam line have pinch point barriers that are clear plastic covers. Due to a possible bias on low power beam dump of < 1 kV, a plastic cover will be used over the entire dump. The low power dump will typically run without bias. The high power beam dump will not be biased or covered.

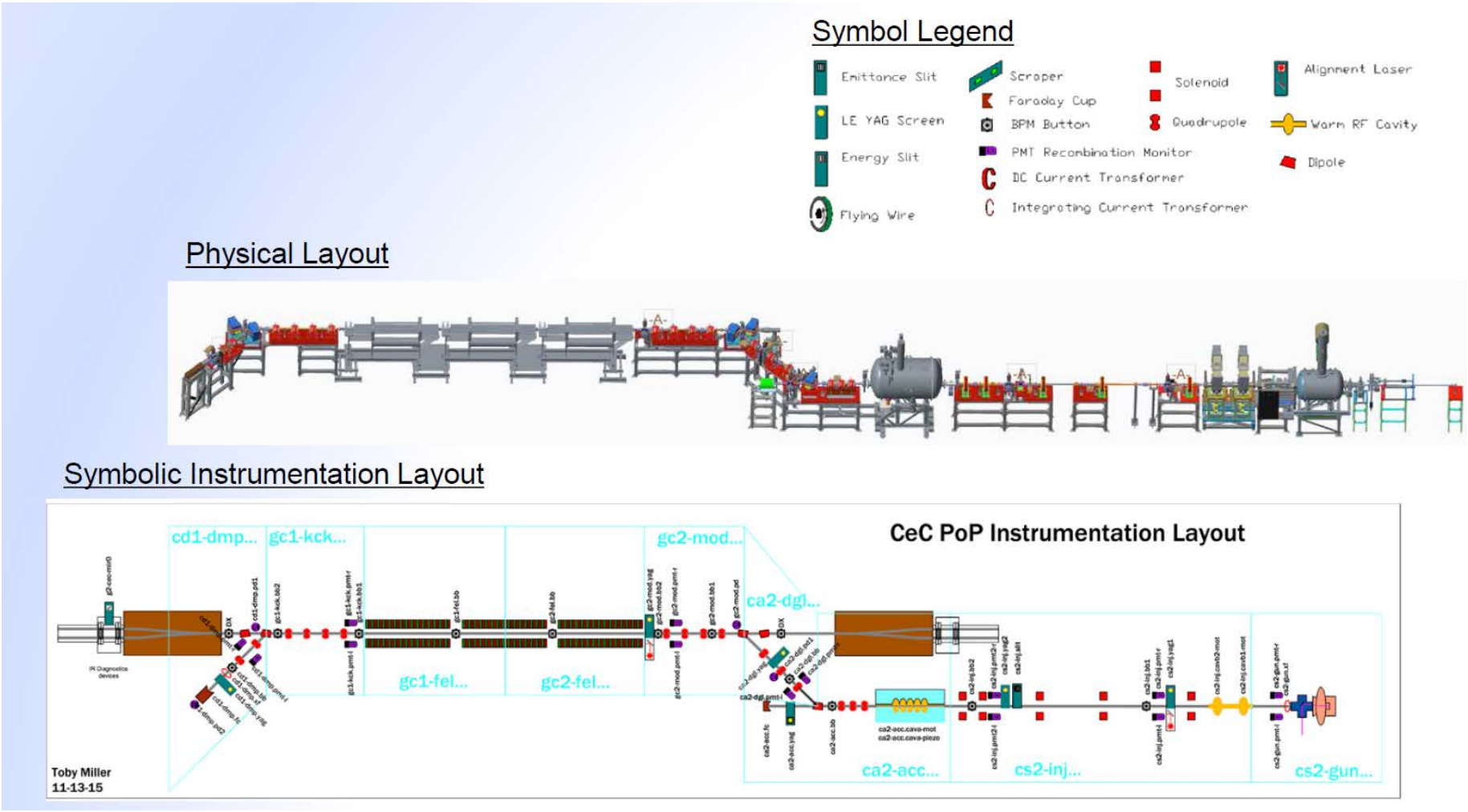

Figure 24: CeC PoP Instrumentation Layout

For the CeC PoP Experiment, the following instrumentation will be used:

1. Charge monitor
    - The first ICT is installed after the gun
    - Second ICT installed before high power dump
    - Bergoz electronics to monitor bunches up to 10 kHz
2. Six profile monitors
    - Cameras are connected to control system
    - Illuminators are in control system
3. Pepper-pot
4. Beam position monitors
    - Libera Single pass
    - Measurement of electron position
5. Faraday cup (FC)
    - First beam dump FC is installed and connected to oscilloscope
    - Second beam dump FC is installed and connected to oscilloscope
6. Energy measurement
    - Coarse measurement with profile monitor
    - Precise measurements done with Libera Hadron or vector voltmeter (lock-in amplifier) and spectrum observation
7. Timing and synchronizations
    - Laser trigger with pre-trigger for instrumentation is provided by LLRF system
    - Triggering of cameras, oscilloscope, BCM, BPM electronics, FC (reset and gate), ADC3123
8. Oscilloscope
    - Installed and remotely controlled
    - Can save traces locally
9. Machine Protection System (MPS)
    - Low power beam MPS
    - High power beam MPS
10. Beam loss monitors
    - HV power supplies are controlled
11. IR diagnostics
    - Detectors, port, controls, read out
12. Spectrum analyzer

Cooling System

De-ionized water is used for dump cooling, warm magnet cooling, power supply cooling, buncher cavity cooling and possibly the cryo-pump cooling. The cooling water system is the one used for the BRAHMS experiment previously located at IR2. The CeC layout is pictured in OPM 14.9.[10] The closed deionized system is periodically monitored for metals and for radioactivity including tritium, which is similar to other closed cooling systems at C-AD.[11]

[10] OPM 14.9_14.9 C-A EMS Process Assessment for RHIC Cooling Water Systems
[11] http://www.c-ad.bnl.gov/ESSHQ/SND/cooling_water_radioactivity.htm

Laser System

The CeC PoP Experiment electron-beam source will use a laser excited cathode similar to the Energy Recovery Linac (ERL) system in Building 912. The laser is a commercially procured laser that is registered with the BNL Laser Safety Officer. This Class IIIb laser is custom designed and manufactured by NuPhoton. The laser is located in a new modular building, which is located outside of the 2 o'clock shielding block. Access to the laser room is controlled during operations. The laser light will be transported to the 2 o'clock IP through the shielding.

The laser employs a Fiber Master Oscillator Power Amplifier. The laser emission wavelength is 532 nm. The repetition rate of the 532 nm light pulse is 78.2 kHz. The 532 nm light is produced in free space and then coupled into a transport fiber prior to transmission to the CeC electron gun.

In the CeC PoP Experiment beam-line, the electron beam is transported through a series of undulator magnets in the RHIC IP beam line. The undulator radiation will be analyzed in the RHIC tunnel by instrumentation systems.

Laser system components are commercially purchased and built to specification. Components that are not listed by a national recognized testing laboratory were inspected by a BNL EEI. Solvents such as methanol, ethanol, isopropanol, and acetone, are used for cleaning optics in very small amounts. The laser room will be interlocked, as per SBMS Laser Safety requirements. PPE for laser light including safety glasses, as per SBMS Laser Safety Requirements, will be used by the laser operator.

The overall layout of the laser room with respect to the electron gun is illustrated in Figure 25. There is approximately a 30 to 40 meter beam path between Laser Room and the CeC electron gun location in the RHIC tunnel, with multiple bends required for the light path. The laser light will be transported in an optical fiber.

The laser room is contained in the modular building, and the room is an interlocked Laser Controlled Area as per SBMS Laser Safety subject area, ANSI Standard and C-AD requirements. Training and medical surveillance requirements will be met by the laser operators. An unauthorized entry into the Laser Controlled Area terminates emission. The laser safety system allows for key or code entry. Operators will follow an approved Laser Standard Operating Procedure. PPE is required for entry into the Laser Controlled Area.

Inside RHIC tunnel at IP2, a vertical table on the wall across from the CeC electron gun will receive the fiber from the Laser Room. The vertical table will be mounted with a collimator, imaging lens, beam-splitter, photodetector and camera. The laser-light beam path past the table will go through a cross-over to the CeC accelerator vacuum system and the light path will be enclosed. The vertical table will have a cover and will be posted with appropriate warnings. The cover will require tools for removal. Pre-

alignment can be done with a Class II/IIIa laser, which will minimize the potential for a scattered Class IIIb beam in the CeC PoP Experiment area.

Undulator radiation, which could attain Class IIIb/IV levels, will not be transported outside the RHIC tunnel and it will be analyzed in situ. This light is expected to be about 12 μm wavelength (UV/infrared) at a maximum power of 1 W. Power is usually significantly lower and it depends on e-beam parameters. Undulator radiation can only be generated when e-beam is running.

To summarize, a laser light hazard can exist at several locations at CeC PoP Experiment

- Laser room / Laser Controlled Area
- Laser table and cross over to CeC in the tunnel cross at IP2

For hazard controls, all laser beams are enclosed, and use of a low –power laser or use of no-access mode at RHIC IP2 will be done for final laser alignments instead of creating a separate Laser Controlled Area inside the RHIC ring. Undulator UV/infrared radiation can only be generated when RHIC ring IP2 area is in no-access mode. Undulator radiation is not transported outside the RHIC tunnel.

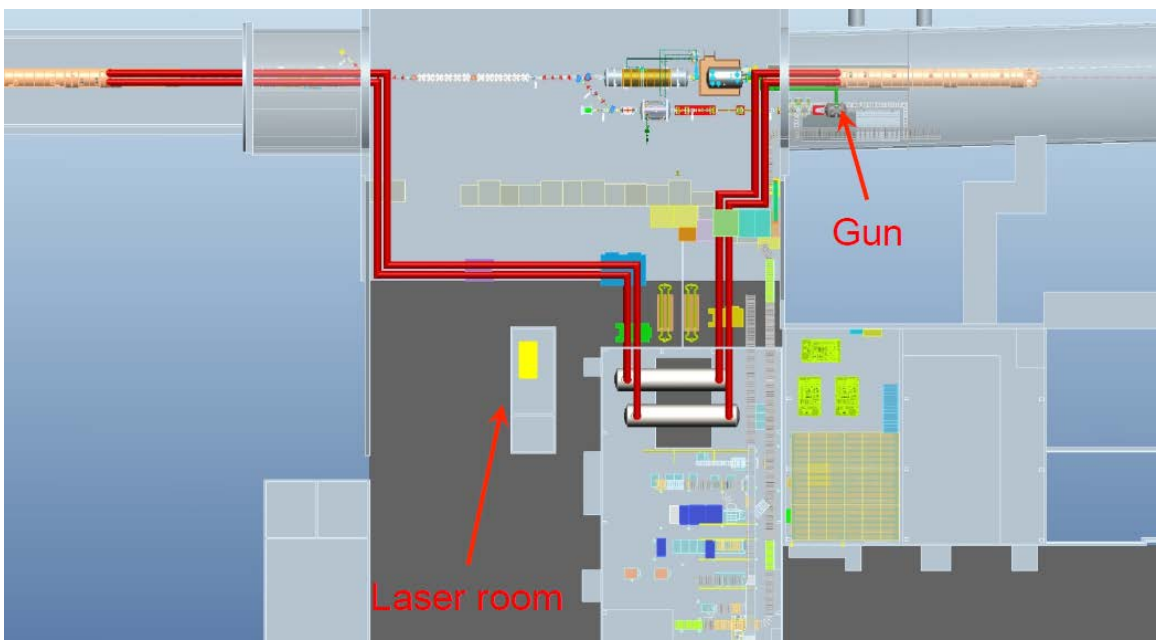

Figure 25 - Location of laser with respect to cathode at the electron gun at CeC.

Free Electron Laser (FEL)

A free-electron laser (FEL) directly converts the energy of a beam of electrons into light and also provides amplification of the electron beam micro-bunching at the FEL wavelength. The latter is used to amplify reaction of the electron beam on initial perturbations induced by ions on the modulator section. The bunching occurs when the

electrons wiggle in a periodic array of magnets (the wiggler) and interact with the light they emit.

The FEL in CeC PoP Experiment will operate the infrared region (IR) of the photon energy spectrum. The electron-beam current will be increased to observe FEL IR gain. Low and high power IR detectors will be used to make non-ionizing radiation measurements in the tunnel. When the electron beam and ion beam are co-propagated in the modulator, the expectation is an increase in light emission due to ion bunch inducing density modulation in the electron beam. In contrast with electron beam, ion beam is not impacted either by the wiggler magnetic fields or by IR radiation. Periodic field changes of the FEL wiggler will cause periodic oscillations of ions with amplitude of 0.1 micrometer, e.g. 10,000-fold smaller than the transverse ion beam size.
The positive effect of FEL will occur in the kicker, where bunched electron beam will reduce the variance in the energy of an ion bunch; that is “cool” them.

Table 6 FEL Parameters

Electron Beam	
RMS Energy Spread	$\leq 1\times10^{-3}$
Normalized Emittance	$\leq 5\ \mu m \cdot rad$
Peak Current	60-100 A
FEL	
Wiggler Length	3×2.5 m
Wiggler Period	40 mm
Wiggler Strength, a_w	0.5 +0.05/-0.1
FEL Wavelength	13.6 μm

Figure 26 Wiggler Magnet

BINP (Novosibirsk, Russia) designed and manufactured the helical wigglers (see Figure 26). Helical geometry provides equal focusing in both transverse directions. The wiggler is designed with adjustable gap and can be reused for full size CeC cooler in RHIC/eRHIC operations.

The 78 kHz clock and gate from the CeC PoP drive laser is provided by low-level RF electronics. Because the same electronics are synchronized with the RHIC RF system and associated abort gaps, the 78 kHz clock will provide the gate signal, which defines the electron beam presence in RHIC's yellow abort gap, when the abort gaps for both yellow and blue ring are aligned in the IP2. The CeC electron pulses are short, about 10 picoseconds each, and they have low jitter (10 ps rms and 50 ps peak to peak), therefore electron beam pulses will be straightforwardly accommodated inside the 1 microsecond yellow abort gap.

The same low-level RF system provides synchronization for the CeC cavities (112 MHz gun, 500 MHz buncher cavities, and 704 MHz accelerator cavity) in order to ensure appropriate beam energy and energy spread.

During the CeC PoP Experiment, the RHIC revolution frequency and laser clock will be equal and synchronization will be such that electron beam will be on the top of one of the hadron bunches circulating in the yellow ring. The transverse alignment of the both hadron and electron beams will be done with beam position monitors, which have resolution around a few microns, which is well below the required 50 microns.

Safety Analyses for Non-Standard Industrial Hazards

Oxygen Deficiency Hazards

The Credited Controls and safety basis for oxygen deficiency hazards in the RHIC tunnel at IP2 are given in the 2011 C-AD SAD. The safety analyses for oxygen deficiency hazards in RHIC IP2 and Building 1002A are given here for CeC PoP Experiment operations.

Building 1002A houses a medium pressure helium compressor, vacuum pumps for 2K bath pumping, and interconnecting piping. Reliefs are piped to outside of 1002A. The 1002A building volume is 22,500 ft^3 and the free volume is 20,000 ft^3. The building fan capacity is 3000 CFM, which is required for heat removal. The operational discharge rate of the compressor for liquid helium is about 10 g/s when in steady state for the cavities. The cool-down discharge rate is 18 g/s liquid helium, which is the compressor capacity.

Table 7 shows the release rate of helium in a depressurization event and release to Building 1002A. Results of the analysis are shown in Figure 27, and the helium leak rate into 1002A is assumed to decline exponentially as the system depressurizes to 1 atmosphere. This analysis was reviewed and documented in LESHC Pressure and Cryogenic Safety Sub-Committee meeting LESHC 13-14, and other LESHC meetings held for CeC.[12, 13, 14]

[12] LESHC 13-14 Review the 112 MHz SRF Cavity Gun Cryostat System and Cryogenic Supply Cryostat and Distribution System at RHIC's IP2, password is oper8

[13] LESHC 15-03 Review of the CeC 704 MHz 5-Cell Cavity Cryostat and 2K Cryo Subsystem, password oper8

[14] LESHC 13-09 Initial Review of the 704 MHz 5-Cell Niobium Cavity Cryostat System for the Coherent Energy Cooling (CeC) Project in IP2, password oper8

Table 7 - Depressurization Inventory / Flow Rate for 1002A

Components	Operating / Release Conditions Temperature, Pressure	Depressurization to 1 atm Inventory, Liquid L He Equivalent		Flow Rate Due to Heat Leak or Load Compressor / Pump Mass Flow Rate - Gas Flow Rate
		Liters	SCF	
RHIC Interface Phase separator	4.65K, 1.45 atm	16	540	3 g/s - 38 SCFM
112 MHz Cavity / helium vessel	4.4K, 1.2 atm	14	486	Goes to QHS
QHS Condenser system	4.3K, 1.1 atm	123	1026	6 g/s - 76 SCFM
Piping, 1 atm Return, Vacuum pumps discharge side	300K, 1.5 atm	4	108	
TOTAL, Building 1002A		247	6385	

The maximum credible incident (MCI) or failure scenario for the RHIC IP2 cryo system in the RHIC tunnel is a break in the helium supply line, ½", from tap to the CeC PoP Experiment phase-separator. This releases ~700 g/s from the RHIC sextant helium inventory. A supply line failure scenario is already addressed in the RHIC SAD.

The MCI for CeC in IP2 is a failure in the QHS cryostat and loss of CeC He inventory, 617 L liquid helium. IP2 has a free volume of about 95,000 ft^3. IP2 is equipped with ODH sensors and a 60,000 SCFM redundant fan system that initiates upon detection of less than 18% O_2, and ramps up to full speed after 1 minute. The instantaneous depressurization from relieving 617 L liquid helium is equivalent to 15950 SCF of helium gas. A drop to 17.4% O_2 is calculated for uniform instantaneous mixing. The SBMS Fatality Factor is $1.7x10^{-7}$ for this O_2 level in breathing air. The SBMS lists a relevant initiating event, failure of a Dewar with a bayonet fitting, and indicates it occurs with frequency of 0.001 events per hour. Thus, the calculated fatality rate is $1.7x10^{-10}$, which corresponds to ODH Class 0. Since RHIC IP2 is posted ODH Class 0 during RHIC cryogenic system operations, and since RHIC ODH alarm and fan systems are Credited Controls in the RHIC ASE, no further ODH controls are required for the CeC PoP Experiment in IP2.

For CeC PoP Experiment equipment in Building 1002A, the MCI is instantaneous depressurization due to a pipe break in 1002A in the return line from the phase separator to the vacuum pump and helium compressor. A maximum of 247 L depressurization inventory with gas equivalent of 6386 SCF can be released to the building, which has a

volume of 20,000 ft^3. The building is equipped with an ODH sensor with a 3000 SCFM fan. The fan initiates upon detection of less than 18% O_2, and ramps up to full speed after 1 minute. A drop to 14.3% O_2 is calculated for uniform instantaneous mixing. Although unrealistic, uniform instantaneous mixing assumes different points in the building air volume have the same instantaneous concentration of oxygen following a complete pressure boundary failure. The SBMS Fatality Factor is $4.3x10^{-5}$ for this O_2 level in breathing air. The SBMS lists a relevant initiating event, failure of a pipe, and indicates it occurs with frequency of $3x10^{-7}$ events per hour. Thus, the calculated fatality rate is $1.3x10^{-11}$, which corresponds to ODH Class 0. The fan and alarm in Building 1002A are part of the Credited Controls for the ODH system identified in the RHIC ASE; thus, no further ODH controls are required for CeC equipment in Building 1002A.

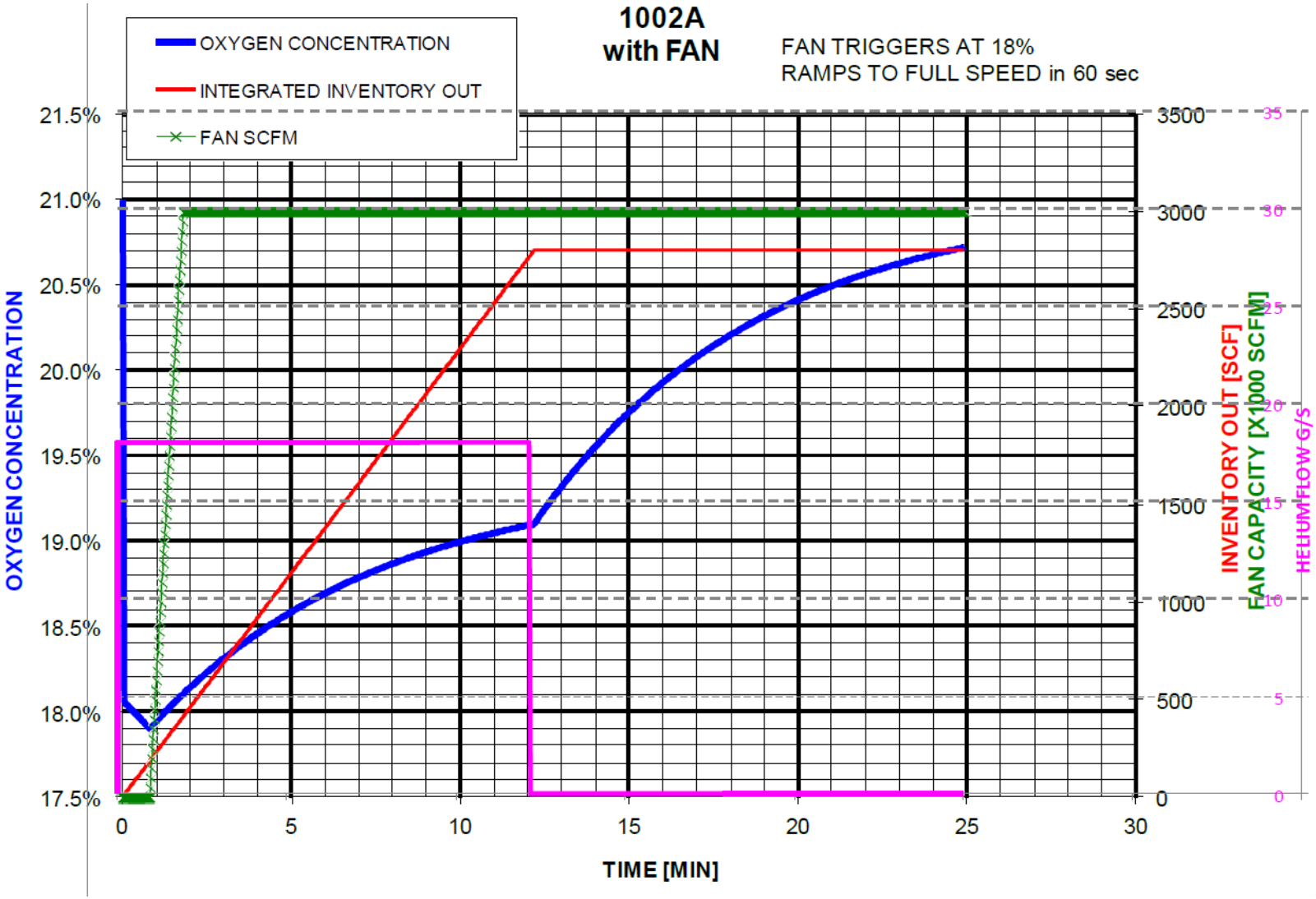

Figure 27 – Results of the Maximum Failure Scenario for the CeC Helium Systems at 1002A

Ionizing Radiation Hazards

It is noted that shield testing and fault studies will be performed during commissioning of the CeC PoP Experiment accelerator in order to validate the safety analyses in this section. Since this is an accelerator, an independent Accelerator Readiness Review will also be performed to confirm the adequacy of all Credited Controls used for radiation protection.

Low Power Dump Operations

The CeC PoP Experiment accelerator relies on bulk shielding of the RHIC tunnel and the relevant portion of the RHIC Access Control System for radiation protection. For 2 MeV electron beam from the electron gun, the maximum beam fault dose rates for any accessible surface are less than 5 mrem in one hour; see D. Beavis to RSC.[15] The cableway in Table III of Reference 4 was blocked to meet this dose limit for gun operation with 2000 W beam.

Cooling water and the electron beam dump may be activated by photo-neutrons. The low power beam dump has been evaluated for a series of radiological issues for 1 Watt of beam at 2 MeV and 22 MeV. These include beam dump heating, ozone production, air activation, soil activation, and residual activity. The results are well below any exposure or environmental limits.[16]

Ionization in the air around the low power beam dump can form ozone. There are published[17] methods for the estimation of ozone production in accelerator environments. The ozone molecules have a decomposition time of 0.83 hours in the absence of ventilation. It was assumed that the beam will be operated for many hours so that the ozone concentration reaches the saturation value. The total energy deposited in the air was calculated to be 5300 eV/s per 22 MeV electrons into the beam dump. The resulting ozone concentration is 1.6×10^{-6} ppm. A value of 0.1 ppm is the ACGIH TLV for ozone. The calculation for 2 MeV has a result of 1.2×10^{-4} ppm ozone concentration. The ozone production occurs entirely in the backward direction. The results are well enough below the allowed ACGIH TLV for ozone that a more accurate simulation is not necessary.

High energy neutrons created in the beam dump create activation products in soil that can be leached to the ground water. The concrete floor and roof are credible soil caps to prevent rainwater intrusion into activated soil and the leaching of tritium to the water table if it were created by beam losses in the dump. The electron beam energy is sufficiently low that very few high energy neutrons are created. Typically C-AD uses the neutrons with energy greater than 20 MeV to estimate the tritium production. The neutron spectrum drops rapidly with distance from the dump. From the MCNPX results for 22 MeV electrons, calculation show there is no soil activation concern for the low power dump.[18]

---

[15] C-AD Radiation Safety Committee, Memorandum from D. Beavis, March 20, 2014
[16] C-AD Radiation Safety Committee, Memorandum from D. Beavis, September 16, 2015
[17] IAEA Technical Report 188, 1979
[18] C-AD Radiation Safety Committee Memorandum from D. Beavis, September 14, 2015

A simple and conservative estimate was done for the potential air activation due to beam into the low-power beam dump. The 2 MeV beam is too low in energy to cause air activation. The 22 MeV beam can create air activation products from the bremsstrahlung radiation escaping the beam dump. For 22 MeV the only radionuclides of interest are ^{11}C, ^{13}N, ^{15}O, and ^{39}Cl, which are created by (g, n) reactions. Calculations show the saturation concentrations for these contaminants in air in the RHIC tunnel near the dump are orders of magnitude below 1 Derived Air Concentration (DAC) for occupational exposure. Exposure to air at 1 DAC is equivalent to a dose rate of 2.5 mrem in an hour. Additionally, these radionuclides are short lived (minutes), and would decay away quickly after beam turn off.

There is no emission point (e.g., stack) at RHIC and there is no point release scenarios for these airborne contaminants that would lead to exposures elsewhere on-site or off-site.

The residual activity of the low-power beam-dump is not significant due to a combination of low power and low beam energy. Immediately after shutdown the dose rate at a foot would be a few mrem/h and would quickly decay since it is dominated by ^{53}Fe, which has a half-life of 8.51 min. After a few hours, the dose rate would be dominated by ^{56}Mn and dose rate would be a few hundred microrem at a foot. At C-AD, Radiological Control Technicians (RCTs) would conduct surveys of the CeC area prior to entry after a run to ensure there is no unexpected buildup of activity.

The low power beam dump can be a combination of beam dump and associated shielding. The present dump with no associated shielding is approved for 2000 Watts of 2 MeV beam and 30 Watts of 25 MeV beam averaged over an hour. These limits are for radiation protection and not machine protection. The 25 MeV beam power limit is established by conservative dose rate calculations from the residual activity reaching 100 mrad/h at a foot immediately after beam is turned off and the 2'clock IR posted as a Radiation Area.

Electron Beam Loss during Transport

Failure of the CeC PoP magnets common with the RHIC transport are only expected to cause beam loss issues in the IR for the electron beam. There was a discussion on whether a full magnet short was credible. Typically a complete short causes a fire due to the resistance at the point of contact causing the short. More common are turn to turn shorts which cause a partial decrease in a magnets bending power. These shorts would most likely cause a distributed scraping loss downstream of the element with the short. A complete short would create a localized loss. For the electron beam, a decreased bend at the first dipole causes beam aimed towards the back of the tunnel. Beam aimed at the back wall will be a machine protection issue provided the shielding is sufficient for faults of the full beam. The second bend being too small or zero will again cause the beam to be aimed at the back wall and only be a machine protection issue. The last electron dipole under bending will send the beam down into the tunnel. This could be an issue for the penetrations in the tunnel.

Rare magnet faults in the electron beam transport were studied.[19] These faults were considered to be non-credible or impossible. Low power testing at startup of the CeC PoP Experiment

[19] C-AD Radiation Safety Committee Minutes, 11-12-15 (1)

should find any existing shorts in the coils. Coil shorts are rare and multiple shorts are not considered credible in a five dipole system. Should a short develop during operations the time for the bending power to change will be sufficient time such that the MPS should stop the beam. The concern for electron beam loss is machine protection not radiation protection for personnel and the MPS can react to changes in a few tens of micro-seconds.

The MPS will use two measures for electron beam permit. The Beam Position Monitors, which are BPMs also called buttons, can measure the electron beam position to a few microns. The trajectory of the electrons will have a defined narrow window, a few mm, in which the electron beam permit will be satisfied. The MPS will also use current monitors to measure the transmission of the beam. Transmission below an acceptable threshold will pull the electron beam permit. In addition loss monitors will be used as the system progresses. However, the beam loss monitors are not as fast as the Beam Position Monitors (BPMs) and current monitors.

The CeC PoP Experiment physicists are highly motivated to ensure that the MPS is properly setup and functional. Initial low power beam will be used to establish that the system functions as designed. Detected failures in the beam transport in position or transmission will cause the electron beam permit to be pulled. If the MPS should fail to do its intended job the beam can punch a hole in the vacuum system. A vacuum failure would cause several days of downtime to the RHIC program but the CeC PoP Experiment would be off for the rest of the running period. The process to re-bake the vacuum chambers requires CeC PoP magnets to be split. This process would be too lengthy to complete during the RHIC run. The importance of a successful CeC PoP Experiment is a very high and motivates the physicists to ensure the MPS is functioning properly.

Dose rates through lateral shielding at 2 o'clock from electron beam losses were computed.[20] The results outside bulk shielding are summarized in Table 8. The beam dump at full power will generate a peak gamma dose rate out the 2'clock IR roof of 11,500 mrem/h. Shielding will be used used to reduce the photon dose rate from the beam dump but it will likely be less effective for neutrons; however, the neutron dose rate is 13 mrem/h. The results for sky-shine radiation to the site boundary are summarized in Table 9.

[20] C-AD Radiation Safety Committee Minutes, 11-12-15 (2)

Table 8 Summary of Dose Rates for 8500 Watts of CeC PoP Beam

	Routine dose rate mrem/h (γ, n)	Fault dose rate mrem/h (γ, n)	Fault dose mrem (γ, n)
Transport-sidewall	0.023 , 0.0005	1.6, 0.034	0.3, 0.007
Transport-roof	9, 0.7	634, 45	130, 9
Transport-truck door	0.034, nc*	2.3, nc	0.5, nc
Beam dump-roof	11,500, 13	11,500, 13	Not applicable
Beam dump-berm	0.09, 0.0005	0.09, 0 .0005	Not applicable

*No calculation was conducted since the levels are very small

Table 9 Summary of Sky-shine Dose at the site boundary

Source	Gamma (mrem/y)	Neutron (mrem/y)
Dump	8**	0.014
Transport	0.007	nc*

*No calculation was conducted since the levels are very small

** Shielding to be added after low-power measurements

X-rays from the Gun and Cavities

Chipmunk radiation monitors were used in 2014 to measure the x-rays from the gun and cavities. These measurements help to protect the machine while the experimenters developed the machine protection instrumentation. Measurements also provided area dose rates inside the IR2. The gun at 1.3 MV showed measurements, when they are scaled for distance, are a few hundred rem/h at a foot during conditioning. The warm-buncher cavities with their lower voltage (300kV) were tens of rem/h

at a foot. Both have dual interlocks and the RSC thought it prudent to leave all RF cavities with dual interlocks.[21]

Full Power Beam Dump Operations

The RSC also reviewed full power beam dump operations. That is, RSC reviewed full power beam-dump activation, ozone in air, full power beam-dump heating, and air and water activation. RSC also reviewed external shielding and penetration issues.

The initial choice of copper for the high-power dump was based on dose rate from copper and decay properties for copper after irradiation by electrons > 20 MeV (see Figure 28). Except for the first few hours post irradiation, Cu and Al material would about the same; however, an iron (Fe) dump would be radioactive for hundreds of days. In order to reduce the initial dose rate from the activated dump to ALARA, the CeC PoP Experiment plans to replace the Cu dump with an Al dump during the 2016 RHIC run.

Based on Figure 28, the equilibrium dose rate for 1.3 W is about 8 mrad/h at 1-meter at 15 minutes post-irradiation for an unshielded point source of irradiated copper. MCNPX calculations to compare to this dose rate have been performed by the RSC Chair and reported in RSC minutes.[22] RSC minutes show that with self-shielding ignored the beam dump will reach 30 mrad/h at the end of bombardment at 1-meter with 1.3 W of 25 MeV beam, which compares with results from Figure 28. Figure 27 also indicates Pb would be a reasonable choice of shielding material for this dump; although, the type and thickness of dump shielding will be based on measurements following low-power operation. The dump, barriers, and shielding for the beam dump will ultimately be installed to limit dose rate to less than 100 mrem/h and ALARA. Access to IR will require RCT to make surveys until a satisfactory configuration is established.

[21] C-AD Radiation Safety Committee Minutes 10-16-15.
[22] C-AD Radiation Safety Committee Minutes 11-13-15

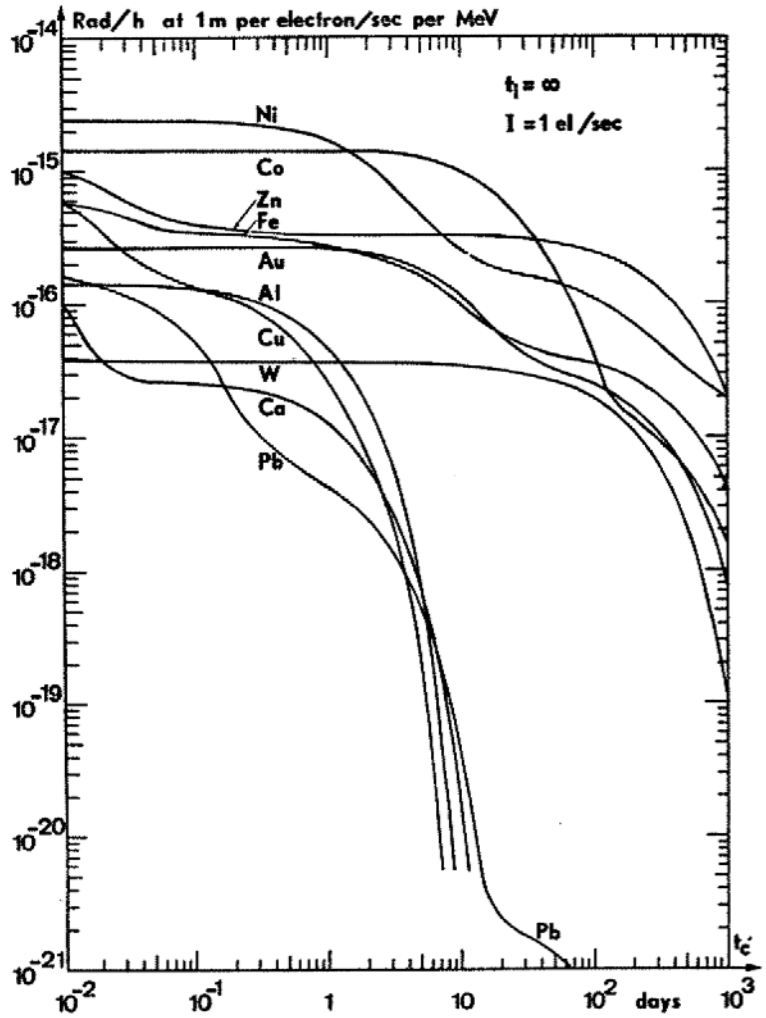

Figure 28 – Radiation dose rate at 1 meter from a point source of radionuclides created by a beam of electrons from an electromagnetic cascade of 1 e/s per MeV of beam energy. Taken from Induced Radioactivity, Marcel Barbier, North Holland Publishing Company Amsterdam, 1969

For full-power, the calculated annual activity concentration of sodium-22 in the leachate in the uncapped soil shielding surrounding CeC does not exceed 25% nor does tritium exceed 5% of the Drinking Water Standard. Additionally, ozone is generated but not at significant levels.

Avoiding Collision/Interaction of Electron and Hadron Bunches

The main parameters of the CeC PoP are given in Table 1. Initial operation is expected to be with 40 GeV gold beams. If 22-MeV electron energy cannot be achieved, then a lower energy would be used. It is expected that the electron-yellow beam cooling will not be useful for electrons below 10 MeV. However, tuning lower energy electrons to the beam stop may be attempted. The velocity of the yellow ion beam must be identical to the velocity of the electron beam. Table 10 provides a list of matching energies for the yellow Au beam and the electron beam. The nominal energies are 40 GeV/u for Au and 21.95 MeV for the electrons. The experiment also intends to try other ion species. During RHIC run16, the CeC PoP Experiment

hopes to also try deuterons and protons. The parameters in Table 1 that remain maximum values are repetition rate, average e-beam current, and electron beam power.

Table 10 Au Ion Energy (GeV/u) and Electron Energy (MeV) with Matching Velocity

Electron Beam, MeV	Ion beam, GeV
10	18.5
15	27.8
20	37
21.95	**40**
25	46.3

Starting with low power beam, the CeC PoP Experiment will be conducted at low repetition rate, typically 1Hz and bunch charge not exceeding 10 nC, typically 3 nC. The low power beam will be conducted without interacting with or operating with RHIC hadron beam. Low power electron beam at 1 W cannot change the orbit of the rigid RHIC ion beams. Beam power will progress in four distinctive modes:

Mode I: Beam will be accelerated in CeC PoP Experiment accelerator and delivered to the low power dump. The energy of the beam will not exceed 25 MeV and the beam power will not exceed 1 W. This mode can be operated any time the IP2 PASS system is activated and CeC PoP Experiment systems, including MPS, are operational. During measuring beam parameters, electron beam will be intercepted with beam-profile or pepper-pot screens. Such measurements will be done with beam current < 5 nA and beam power < 0.125 W. The CeC PoP Experiment bending magnet will be used to measure and to calibrate beam energy. Prior to using this mode, a dedicated RHIC experimental mode without STAR and PHENIX known as APEX (Accelerator Physics Experiments) will be used to prove experimentally that turning on and changing current in the CeC dipole magnets does not affect both blue and yellow hadron beam in RHIC. This feature is provided by use of compensating dipoles (see Figure 29) installed in the hadron beam pass, which are identical to those bending electron beam, but opposite in sign. All CeC dipoles are powered in series providing full transparency for hadron beams. The loss monitors around the ring will be documented during these tests and the results sent to the C-AD RSC for review.

CeC PoP Experiment dipoles should affect RHIC beam at injection energy, which is when RHIC ion beams are most vulnerable. The orbit variation outside IP2 area caused by the CeC PoP Experiment dipoles should not exceed 1/10$_{th}$ of the hadron beam size. An official record of these results will be provided to the C-AD Chair and the C-AD RSC for review. In addition, the energy measurements will be conducted with a closed vacuum valve in the dog-leg (see Figure 29) intercepting the beam and preventing beam from propagating into RHIC.

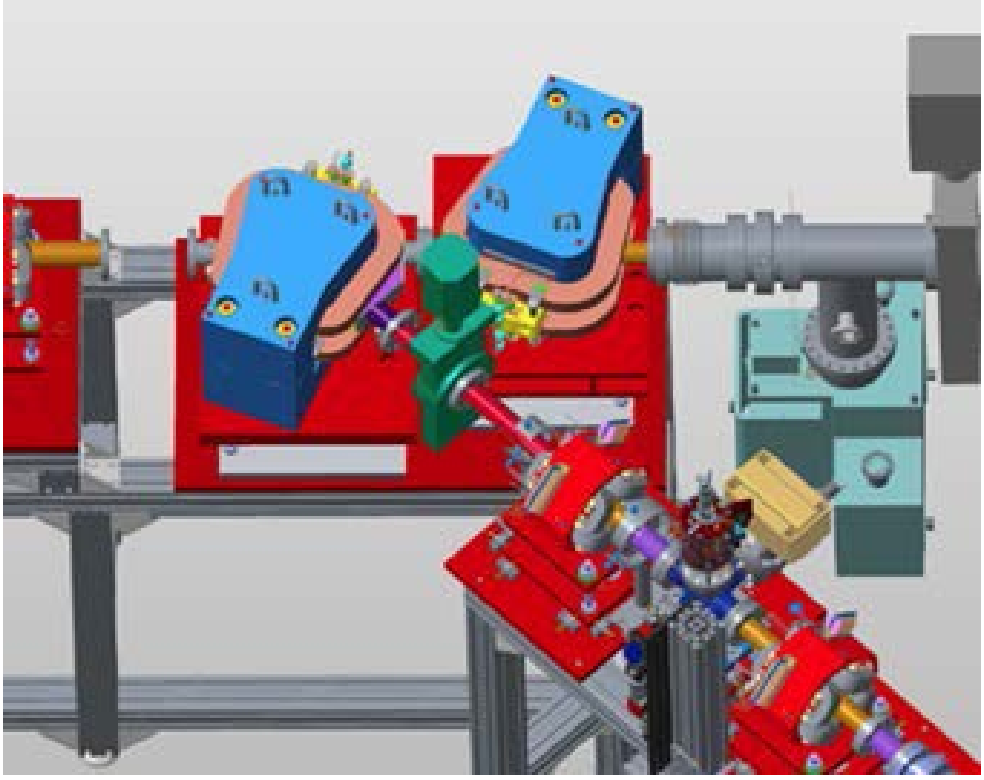

Figure 29 - End of the CeC system dog-leg after which electron and ion beams merge. A pair of identical dipoles with opposite field direction is fed in series and provides zero field integral (null-angle) for the hadron beams circulating in RHIC. The bilaterally symmetric pair of dipoles is installed at the electron beam exit to the Low Power Dump. The vacuum valve (green) separating the CeC accelerator from RHIC vacuum pipe will be closed when CeC PoP Experiment is in Modes I and II.

Mode II: CeC PoP Experiment will operate parallel to the RHIC collider operation and transparent for RHIC beams. In this mode CeC Pop Experiment physicists will propagate low-power electron beam to the High Power Dump at the end of the electron beam transport and guarantee that electron beam does not interact with either yellow or blue hadron beam circulating in RHIC. This timing feature will be provided by the low-level RF system, which controls CeC PoP Experiment laser permits. Specifically, RHIC beam pattern has an abort gap of at least 0.9 μsec (270 m) long. In the middle of this gap, the low level RF system will provide a time window allowing generation of CeC PoP Experiment laser pulse (see Figure 30). In this configuration, electron beam will travel at the same velocity close to that of the hadron beam and propagate through the IP2 without any interaction with hadron beams circulating in RHIC beam. The electron beam in the abort gap could encounter at most 1% of the blue beam. The centering of the beam in the abort gap will be established and monitored by an experimental physicist on duty during CeC PoP Experiment operations. A dedicated APEX session will be used to establish that the electron beam generated by such scheme passes through the IP2 common section in the middle of the abort gap and within ± 100 nsec from its center. This will be verified by observation of the signals from IP2 common beam-position monitors using a digital

oscilloscope. When this mode is verified, the CeC PoP Experiment will make an official record of these results and provide them to the RSC Chair.

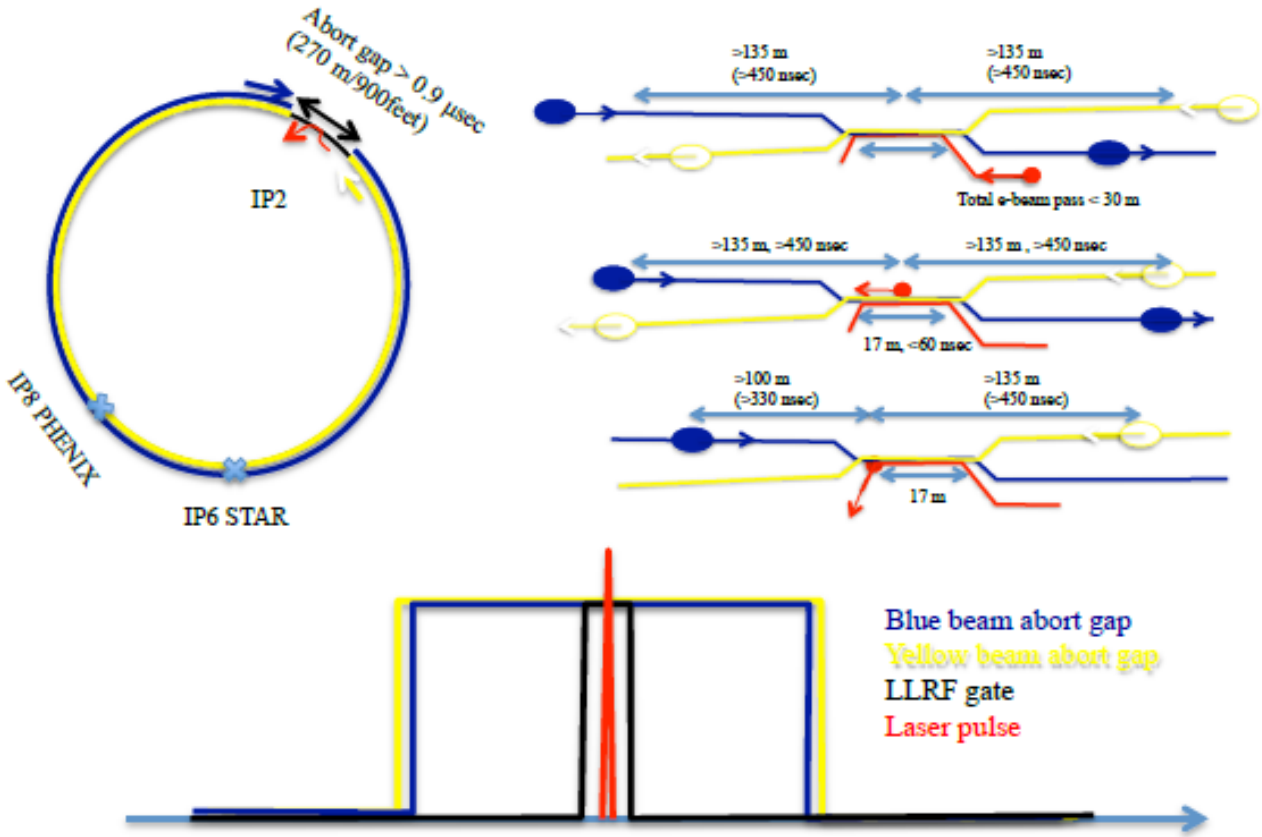

Figure 30 - In RHIC, colliding hadron beams have an abort gap that is typically 1microsecond long but always longer than 0.9 microseconds. By design, these abort gaps always overlap at IP8 and IP2. It provides a long period when there are zero hadrons in the 19-m long straight section common for yellow and blue hadron beam and CeC PoP electron beam. CeC Pop Experiment will use 200 nsec of this gap to propagate electron beam in the common section. The gate window for this propagation will be opened by the RHIC/CeC low-level RF system.

Mode III: This mode will be exercised either during an APEX session or during dedicated CeC PoP Experiment-RHIC time. In this mode, the CeC PoP Experiment accelerator will operate simultaneously with ion beam circulating in Yellow RHIC ring. Hadron beam in Blue ring will be prohibited using established RHIC procedures. Yellow ring will operate with 6 to 12 ion bunches with nominal intensity not exceeding 10^9 ions per bunch and total intensity of $12x10^9$ ions. This mode had been established for APEX sessions at RHIC and is within RHIC beam safety analysis where one complete RHIC fill (111 ion bunches; $5x10^{11}$ Au ions or equivalent) was treated as a point loss. This mode will be used for establishing reliable propagation of the electron beam through the common section and establishing that the ion beam imprints its shot noise structure into the electron beam.

There is a single intercepting beam profile monitor installed in the common section. It is prevented from being inserted by a tagged mechanical lock. This lock can be removed and the beam profile monitor could be inserted to trace electron beam. Such operation will follow a dedicated administrative procedure for removing the lock and installing it back prior to any injection of hadron beam into RHIC. The only hadrons, which can collide with electron beam, will be de-bunched hadrons that are lost from the main bunch train and spread nearly-evenly around RHIC circumference. The amount of such hadrons is strictly controlled during RHIC operation, mostly because of the background they provide to the STAR and PHENIX detectors and to avoid "dirty" beam dumps. Large numbers of hadrons in the abort gap defeats the purpose of the abort gap. Thus, the total population of de-trapped hadrons is kept well under 1% of the total beam (< $3x10^{11}$ protons or $2x10^{9}$ ions), using when necessary an abort gap cleaning devise. Only a small portion of these ions (34 m out of 3.8 km, < 1%) can collide with a single electron bunch. Hence, the worst-case scenario, which assumes the CeC electron bunch disrupts these de-bunched hadrons, could not cause loss of more than $3x10^{9}$ protons or $2x10^{7}$ ions per electron bunch. Finally, the chronic losses could not exceed the rate of populating the abort gap with de-bunched hadrons. That rate cannot exceed the total loss from the hadron beams during regular RHIC operation, whose lifetime is from 3 to 10 hours. Hence, the chronic loss would not exceed that already occurring in RHIC during standard operations.

In addition, a 25 MeV electron beam at 1 W power level cannot change the orbit or stability of the 10-250 GeV RHIC hadron beams, should they inadvertently occupy the same space.

Mode IV. Full power operation of the CeC system will be allowed with and without interacting with the RHIC beam (e.g. cooling). Yellow ring will operate with six to twelve ion bunches with nominal intensity not exceeding 10^{9} ions per bunch and total intensity of $12x10^{9}$ ions. Beam energy for the full power operation will be below 25 MeV with power at the dump not to exceed 8.5 kW.

Accelerator Safety Envelope Procedure, Credited Controls and Safety Bases

To commission and operate the CEC PoP Experiment, C-AD management will adhere to an approved OPM 2.5.2 Safety Envelope Procedure and the revised RHIC ASE (Attachment 1). The Credited Controls were developed from methods described in the RHIC SAD. The Maximum Credible Incidents (MCIs) for the CeC PoP Experiment present equivalent consequences to personnel as MCI's described for RHIC ODH in the tunnel, and radiation exposure from either RHIC RF x-rays or RHIC beam loss. Below is a list of CeC PoP Experiment specific Credited Controls, and their safety bases, established through reviews by the C-AD Radiation Safety Committee and the C-AD Accelerator Systems Safety Review Committee.

Credited Controls

In the OPM, as with other ASE OPMs at C-AD, management defines a set of controls for the CeC PoP Experiment operation with beam as follows:

1. Electron kinetic energy shall be limited to 25 MeV
2. The electron beam power to the low-power dump shall not exceed 1 W averaged over 1 hour

3. The electron beam power to the high-power dump shall not exceed 8500 W averaged over 1 hour
4. Shield blocks in or around penetrations and local beam line shielding will be properly in place and configuration controlled
5. Relevant portions of the ACS must be functional if they are preventing access to CeC PoP Experiment beam radiation or CeC RF-generated x-rays inside enclosures, and the ACS must remove beam, or turn off RF, when excessive beam loss or x-ray dose occurs
6. Relevant portions of the ODH engineered protection systems (interlocks, sensors, fans and alarms) must be in place to minimize the likelihood of injury/illness from a release of inert gas if they are preventing exposure to CeC PoP Experiment ODH hazards in the RHIC tunnel or in Building 1002A
7. RHIC may operate Yellow ring simultaneously with CeC PoP Experiment with up to 12 ion bunches with nominal intensity not exceeding 10^9 ions per bunch and total intensity of $12x10^9$ ions
8. With CeC in commissioning mode and CeC injection only into the abort gap, the on-duty Operations Coordinator shall allow simultaneous RHIC operation

Energy and power controls were the basis for ionizing radiation-safety calculations. Helium inventory was the basis for oxygen deficiency calculations.

The revised 2015 RHIC ASE (Attachment 1) contains the Credited Controls. Credited Controls are controls determined through safety analysis, as documented in the approved SAD and USI determinations to be essential for safe operation directly related to the protection of personnel or the environment. Credited Controls 5 and 6 were in the 2011 RHIC ASE and did not need to be revised.

Safety Bases

Modifications or changes to Credited Controls require a safety analysis and a documented review for a potential USI.

1. The safety basis for 25 MeV electron beam kinetic-energy limit and the beam-power limit for the high-power beam dump are that they were used in the high-power beam-dump heat-transfer and/or activation analysis. The power limit for the low power dump is based on heat transfer analysis. Beam dump modifications require a safety analysis and a review for a potential USI to go above these power limits.

2. The safety basis for beam power and beam energy limits is that they were used in the bulk shielding analysis and penetration shielding analysis.

3. The safety basis for beam power and beam energy limits is that they were used in the ozone analysis to ensure ozone concentrations are not above the ACGIH Threshold Limit Value. Changes to beam power or energy require a safety analysis and a review for a potential USI.

4. The safety basis shield block control is that shielding of penetrations was assumed in the shielding analysis. The Radiation Safety Checklist is the method used to verify that all

shielding assumed in the safety analysis is in place before beam operations begin each year or after shielding modifications. This ensures that no excessive radiation exposures can occur.

5. The safety basis for an operational access controls system (ACS) for RHIC ensures that no one is allowed access to radiation from RHIC beams, CeC PoP Experiment electron beam, secondary radiations and RF induced x-rays. The design of the ACS is fail-safe and configuration controlled and any changes that may affect the reliability of the system's safety function are approved by the C-AD Radiation Safety Committee. This Credited Control is currently in the RHIC ASE.

6. The safety basis for ODH interlocks, fans, sensors and alarms is the fact that the Collider tunnel and the RHIC CeC PoP Experiment support building 1002A have the potential for an oxygen-deficiency hazard. The C-AD posts these locations ODH 0 and has installed operable ODH sensors and ODH fans to raise the staff's awareness of the large volumes of helium liquid and helium gas in-process inside these buildings. Exhaust fans minimize significant reduction of oxygen in the buildings from helium releases. The protection system employs exhaust fans, oxygen sensors, and an alarm system since CeC PoP areas may exhibit significant reduction in oxygen concentration should the CeC PoP Experiment cryogenic-system pressure-boundary fail.

7. With RHIC operating Yellow ring simultaneously with CeC PoP Experiment with up to 12 ion bunches with nominal intensity not exceeding 10^9 ions per bunch and total intensity of $12x10^9$ ions, the maximum credible RHIC beam loss is limited to the safe losses similar to routine APEX sessions.

8. With CeC PoP Experiment in commissioning mode and CeC injection only into the abort gap, the interaction with RHIC beam is insignificant.

Administrative Controls

For non-beam operations (e.g. RF testing):

1. The CeC PoP Experiment Shift Leader must ensure that all shielding remains properly in place and configuration controlled.

2. The Access Controls Group Leader must ensure that Access Controls System (ACS) configuration control and maintenance is in accordance with C-A OPM 4.91.

3. A qualified laser operator and approved laser SOP is required for laser operations.

For beam operations:

1. The CeC Project Shift Leader must ensure the 2015 RHIC ASE procedure, OPM 2.5.2. Accelerator Safety Envelope Credited Controls, Administrative Controls and Supports for RHIC (Attachment 2), is implemented during beam operation.

Specific Assurance Methods for CeC Commissioning and Operation

C-AD management has employed the following assurance methods specific to CEC PoP Experiment operation:

1. The CEC PoP Experiment Physicist and engineered-safety-system owners shall sign the Radiation Safety Check-off list prior to enabling electron beam.

2. A qualified MCR Operator qualified in CeC PoP Experiment operations procedures shall be required to be present in MCR during any period of operation with CeC PoP Experiment beam.

3. Routine radiation surveys shall be performed during operation of CeC.

4. The IP2 experimental area shall be subject to the C-AD RHIC sweep search procedures, and equipment operation will be subject to satisfying the relevant RHIC PASS interlocks during operation.

5. If total liquid helium inventory in the CeC PoP system is increased, then the ODH hazard in Building 1002 must be re-evaluated.

6. CeC PoP Experiment commissioning and experimental operation shall follow the C-AD Conduct of Operations and maintain up-to-date relevant procedures in the C-AD OPM.

Acronyms/Symbols

ACS – Access Control System

ALD – Associate Laboratory Director

ARR – Accelerator Readiness Review

ASE – Accelerator Safety Envelope

ASME – American Society of Mechanical Engineers

BPM – Beam Position Monitor

BPVC – Boiler and Pressure Vessel Code

^{o}C – Degrees Celsius

C-AD – Collider-Accelerator Department

CeC PoP – Coherent electron Cooler Proof of Principle

ESH – Environment, Safety and Health

^{o}F – Degrees Fahrenheit

FC – Faraday Cup

FRA – Facility Risk Assessment

GeV – Giga electron Volts

gpm – gallons per minute

HOM – Higher Order Mode

ICT – Integrating Current Transformer

IP2 – Intersection Point 2 for RHIC Rings

IR – Intersection Region

JRA – Job Risk Assessment

K – Degrees Kelvin

kV - kilovolt

LESHC – Laboratory Environmental, Health and Safety Committee

Mbar - millibar

MeV – Million electron Volts

MCI – Maximum Credible Incident

MCNPX – Monte Carlo Code for Neutron and Particle Interactions

MHz- Mega Hertz

MPS – Machine Protection System

ODH – Oxygen Deficiency Hazard

OPM – Operations Procedure Manual

PASS – Particle Accelerator Safety System

PPE – Personnel Protective Equipment

ppm – parts per million

psia – pounds per square inch absolute

PSSC – Pressure and Cryogenic Safety Sub-Committee

QW – Quarter Wave

RF- radio-frequency

RHIC- Relativistic Heavy Ion Collider

RSC – Radiation Safety Committee

SAD – Safety Assessment Document

SC - superconducting

SOP – Standard Operating Procedure

SRF cavity – superconducting radio-frequency cavity

USI – Unreviewed Safety Issue

UV – Ultra-violet

Attachment 1 – Revised 2015 RHIC ASE

Attachment 2 – Revised RHIC ASE Procedure