Charge

- Please perform an independent Accelerator Readiness Review of ERL accelerator and ring commissioning

Please focus on the following areas:

- Areas identified in the Accelerator Safety Order (training, procedures, CAS, AB documents, USIs)
- Records of past reviews, incidents, actions
- Conduct of Operations procedures
- QA (assurance systems)
- Interlocking safety systems
- Controls system
- Conventional safety practices such as LOTO

The following summarizes focus areas and BNL counterparts.

SAD, ASE, USIs, Activities and Records
Counterparts: D. Kayran, E. Lessard

Past Actions and Reviews, Quality Assurance, Configuration Management, Documents and Records, CAS, Drawings
Counterpart: D. Passarello, R. Karol

Controls System
Counterparts: Charles Theisen, J. Jamilkowski

Conduct of Operations, Commissioning Plan, Commissioning Sequence, Fault Studies
Counterparts: L. Hammons, D. Kayran, D. Beavis

Alarming and Interlocking Area Radiation Monitors
Counterparts: D. Beavis, J. Reich

Radiation Protection and Safety, Ozone, Hydrogen, Fault Study Plan
Counterparts: D. Beavis, P. Bergh, R. Karol

Conventional Safety, ODH, Lasers, RF
Counterpart: P. Cirnigliaro, B. Sheehy, A. Zaltsman

Personal Protection Systems: Interlocks for ACS, ODH, Laser, RF Cavity
Counterparts: J. Reich, A. Etkin

The review process should consider:

- Lines of Inquiry
- Document reviews
- Counterpart discussions
- Observations

Please report the following action items:

Pre-Start – actions that should be addressed prior to the Phase II approval by DOE Post-Start – actions that may be completed after Phase II approval; the ARR team should recommend that these actions be identified to the ERL management, and that management's plan and schedule for completing the actions be provided to and discussed with the Accelerator Readiness Review team
Opportunities for Improvement – actions that the ARR team believes would significantly enhance routine operations.

Please prepare a report as follows:

Contents

- Brief discussion of the Findings and Observations within each area of the ARR
- Brief comments on opportunities for improvement
- Pre-start and post-start action items and opportunities for improvement

Schedule

- Please prepare a draft report drafted within 7 to 11 days following the on-site work
- Please submit the draft to counterparts for factual accuracy and comments
- Please submit the final report to C-AD management within approximately one week after comments received

Collider-Accelerator Department

Hazard Screening Report for Energy Recovery Linac (ERL) Prototype in Building 912

Compiled by

Edward T. Lessard

8/2/2006

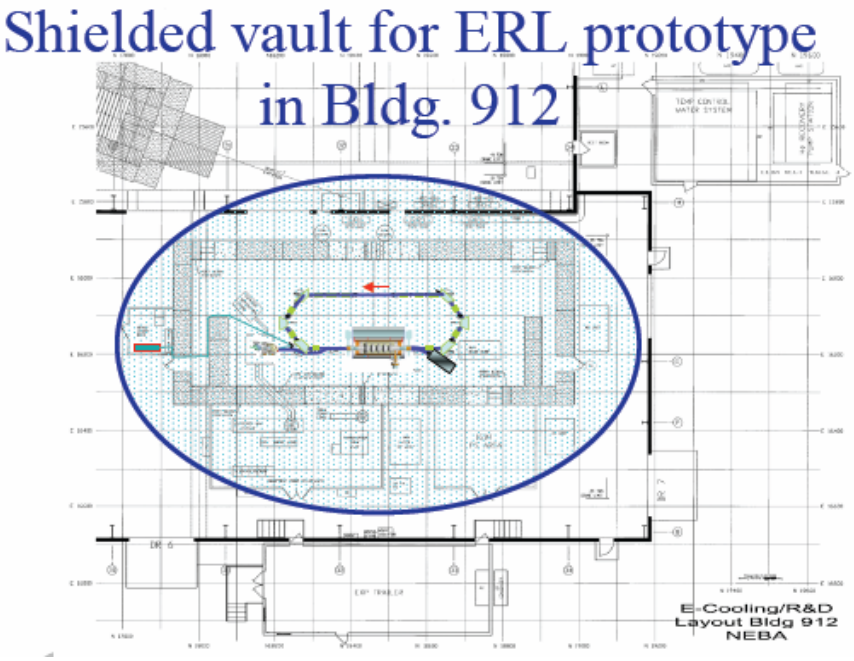

ARR for ERL High Current High Energy Commissioning May 19, 20 and 21, 2015
Large Conference Room (LCR), Bldg. 911, 2nd Floor

A G E N D A

Tuesday May 19, 2015 (DAY 1)

Time	Description	Lead (s)
8:30 – 9:00	ARR Team Meeting	S. Rokni
9:00 – 9:15	Welcome & Introductions Safety Briefing	I. Ben-Zvi E. Lessard
9:15 – 9:30	Motivation and Look Ahead	I. Ben-Zvi
9:30 – 9:45	Past Action Items	D. Passarello
9:45 – 10:00	Commissioning Sequence	D. Kayran
10:00 – 10:15	Assurance Contractor	R. Karol
10:15 – 10:30	Coffee Break	
10:30 – 10:45	–Radiation Safety	D. Beavis
10:45 – 11:00	Training and Procedures.	L. Hammons
11:00 – 12:00	Tour of the ERL Area	
12:00 – 1:00	Lunch Break	
1:00 – 5:00	Team Interviews, documents & records reviews, system walk-downs, work observations, discussions, breakout sessions	Team Members & Counterparts

Wednesday May 20, 2015 (DAY 2)

Time	Description	Lead (s)
8:30 – 9:00	ARR Team Meeting	S. Rokni
9:00 – 10:15	Team Interviews, documents & records reviews, system walk-downs, work observations, discussions, breakout sessions	Team Members & Counterparts
10:15-10:30	Coffee Break	
10:30-12:00	Team Interviews, documents & records reviews, system walk-downs, work observations, discussions, breakout sessions	Team Members & Counterparts
12:00-1:00	Lunch Break	
1:00-4:00	Team Interviews, documents & records reviews, system walk-downs, work observations, discussions, breakout sessions	Team Members & Counterparts
4:00- 5:00	C-AD Debrief	S. Rokni

Thursday May 21, 2015 (DAY 3)

Time	Description	Lead (s)
8:00 – 10:15	ARR Team Meeting; Team drafts findings, observations and opportunities for improvement	S. Rokni
10:15-10:30	Coffee Break	
10:30 – 12:00	ARR Team Meeting; Team performs fact checking and prepares closeout presentations	S. Rokni
12:00-1:00	Lunch Break	
2:00-3:00	Closeout Meeting	S. Rokni

Hazard Screening Report for ERL Prototype Project

Introduction 2
Executive Summary 2
ERL Subsystems (Sub-system Manager), Associated Hazards and Follow-up Actions 3
2.1 Superconducting RF Cavity (Ilan Ben-Zvi) 3
Hazard Rating and Follow-up Assignments for Superconducting RF Cavity (Ilan Ben-Zvi) .. 4
2.2 RF Systems for Superconducting Injector and Superconducting Cavity (Alex Zaltsman) 7
Hazard Rating and Follow-up Assignments for RF Systems for Injector and Superconducting Cavity (Alex Zaltsman) 7
2.3 Injector System (Andrew Burrill, Triveni Rao) 9
Hazard Rating and Follow-up Assignments for Injector Systems (Andrew Burrill, Triveni Rao) 10
2.4 Cryogenic Systems (Dewey Lederle) 14
Hazard Rating and Follow-up Assignments for Cryogenic Systems (Dewey Lederle) 14
2.5 Vacuum Systems (Dick Hseuh) 17
Hazard Rating and Follow-up Assignments for Vacuum Systems (Dick Hseuh) 17
2.6 Magnet Systems (George Mahler) 19
Hazard Rating and Follow-up Assignments for Magnet Systems (George Mahler) 19
2.7 Magnet Electrical Systems (Bob Lambiase) 22
Hazard Rating and Follow-up Assignments for Electrical Systems (Bob Lambiase) 22
2.8 Electron Beam Dump Systems (Ady Hershcovitch) 24
Hazard Rating and Follow-up Assignments for Electron Beam Dump Systems (Ady Hershcovitch) 24
2.9 Beam Instrumentation (Pete Cameron) 26
Hazard Rating and Follow-up Assignments for Beam Instrumentation (Pete Cameron) 26
2.10 Control Systems (Brian Oerter) 28
Hazard Rating and Follow-up Assignments for Controls (Brian Oeter) 30
2.11 Unassigned
2.12 Conventional Facilities (Dave Phillips) 33
Hazard Rating and Follow-up Assignments for Conventional Facilities (Dave Phillips) 33
2.13 Safety Systems (Jonathan Reich) 36
Hazard Rating and Follow-up Assignments for Safety Systems (Jonathan Reich) 38
2.14 Cryomodule and e-Gun Installation (Gary McIntyre) 39
Hazard Rating and Follow-up Assignments for Cryomodule and e-Gun Installation Systems (Gary McIntyre) 39
2.15 Authorization (E. Lessard) 41
Appendix 1: Questions Used in the Collider-Accelerator Department's Hazard Identification Tool 42

Introduction

A hazard screening tool (Appendix 1) was designed to assist in identifying the hazards associated with each sub-system for the ERL Prototype Project to determine the level of hazard analysis required and follow-up actions. The tool was used by each sub-system manager.

In the sections that follow, the ERL Prototype sub-system is listed (first level or one dot), with detail in some cases down to three levels (three dots). This is followed by a summary of the hazards identified using the hazard screening tool, with an associated hazard rating. Also included are follow-up assignments that must be completed by the sub-system manager. These assignments have a designated responsible individual and are tracked in the C-AD Family Action Tracking System

Executive Summary

Details of the proposed hazards and the follow-up safety review actions are described in this report. Responsible-person assignments are identified. Significant follow-up actions will be tracked to closure.

The hazards and controls for ERL Prototype subsystems have been found to be similar to hazards and controls described in the existing C-AD Safety Assessment Document (SAD). However, a separate safety analysis will have to be written and reviewed by the Laboratory ESH Committee, and approved by the BNL Deputy Director for Operations. The safety analysis will be similar to the C-AD SAD, and authorization to commission and operate the ERL Prototype will follow the requirements in DOE Order 420.2B, Accelerator Safety.

ERL Prototype commissioning and operations must be approved by DOE. DOE is also responsible for approving the Accelerator Safety Envelope. Prior to requesting authorization to commission, BNL is responsible for performing an Accelerator Readiness Review, as per the SBMS Subject Area, Accelerator Safety. C-AD is responsible for preparing the authorization documents and achieving readiness in safety, operations and hardware prior to the Review.

C-AD occupational safety and health (OSH) programs and environmental (E) programs to be employed at the job level are described in detail on the C-AD ESH web and are compared to the Integrated Safety Management System for DOE. These OSH and E programs will be adhered to throughout the construction, commissioning and operation of the ERL Prototype.

ERL Prototype facilities or modifications have undergone a National Environmental Policy Act (NEPA)/Cultural Resources review. This review was conducted separately from this hazard screening.

ERL Subsystems (Sub-system Manager), Associated Hazards and Follow-up Actions

2.1 Superconducting RF Cavity (Ilan Ben-Zvi)

The superconducting linac cryomodule (ERL cryomodule) is shown in the figure below. The major structural components will be installed in the ERL Prototype facility in Building 912.

The superconducting linac cryomodule is an assembly used to accelerate electrons in the Energy Recovery Linac (ERL). Its main element is a niobium structure called a cavity. The niobium cavity is shown in the figure below. It comprises 5 cells, to obtain a repeating pattern of the electromagnetic field in order to get efficient acceleration. The cavity resonates at a frequency of 703.75 MHz with microwave power that is fed through a port called the Fundamental Power Coupler. When cooled to liquid helium temperature, the niobium becomes a superconductor, reducing the losses so that high fields (up to 20 MV/m) can be set up in the cavity using a few 10's of watts of RF power. Naturally, such high fields can lead to acceleration of background electrons or even cause field emission of electrons that will then be accelerated by the fields and then result in x-ray radiation through Bremsstrahlung.

The details of the cryomodule are shown in the next figure. The 5-cell niobium cavity assembly is enclosed in a titanium helium vessel. The cavity is equipped with a tuner, fundamental power coupler and beam pipes for bringing the electron beam in and out of the cavity. The beam pipes also serve as conduits for the microwave power generated by the beam passing the cavity, what is call HOM (Higher Order Mode) power. The HOM power is dissipated in ferrite assemblies on either side of the cryomodule. The cavity is maintained at liquid helium temperature by liquid helium brought into the cavity's helium vessel through a 2K main line. To reduce cryogenic losses the cavity system is enclosed in a vacuum vessel equipped with a thermal shield, comprised of a metal envelope covered by Multi-Layer Insulation (MLI). The cavity must be maintained in a low ambient magnetic field while being cooled down, and for this purpose, there are two magnetic shields enclosing the cavity.

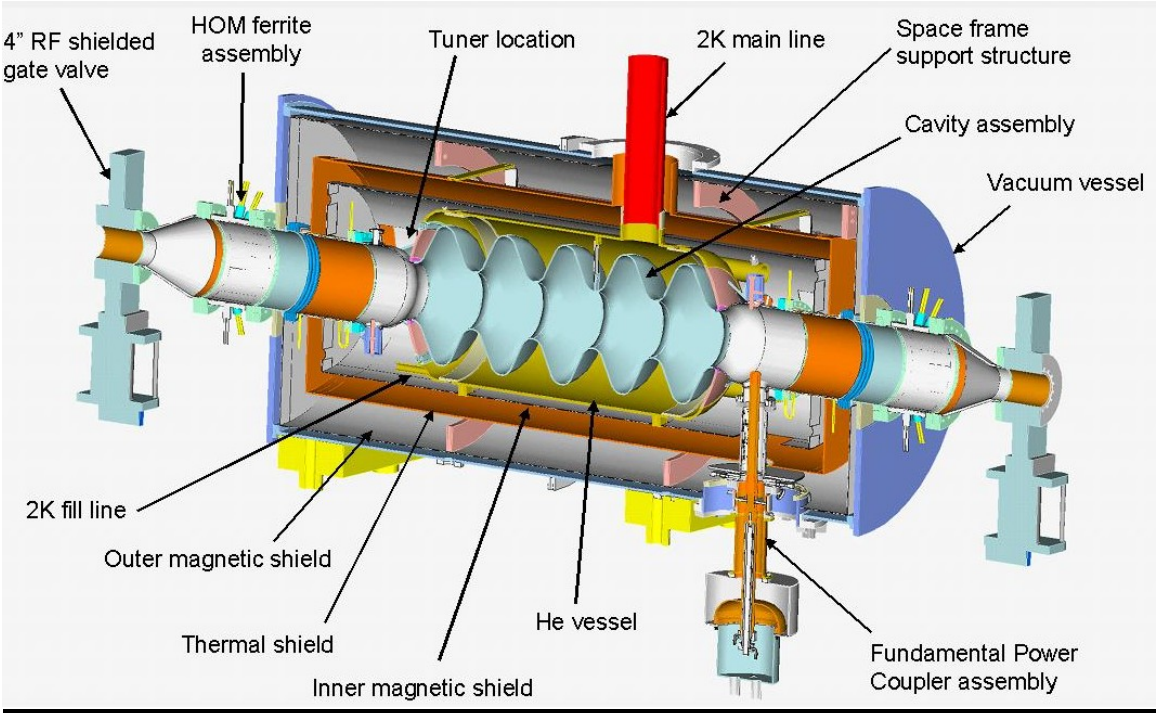

Hazard Rating and Follow-up Assignments for Superconducting RF Cavity (Ilan Ben-Zvi)

Explanation of Hazard Rating

- 0 indicates an operation with minimal risk
- 1 indicates an operation with low initial risk
- 2 indicates an operation with moderate initial risk
- 3 indicates an operation with a high initial risk

Because of the hazards identified, this operation has the potential of being an operation with a high initial risk.

The following questions were answered YES and are considered a hazard rating of 3:

2c (1). Does this operation use RGDs that are built locally or are commercially available units that have been modified?

The following questions were answered YES and are considered a hazard rating of 2:

2. Are there any accelerators or other radiation generating devices involved in this operation (other than the Collider-Accelerator)?
2a. Is there an accelerator used in this operation?
2a (1). Does this operation use accelerators that are built locally or are commercially available

units that have been modified?
2b. Are there any radiation generating devices (RGD) used in this operation?
2b(1). Are radiation generating devices capable of creating a High Radiation Area (>100 mrem/hr at 30 centimeters)?
2b(2). Are the radiation generating devices capable of creating a radiation area?
2c. Does the radiation generating device only produce radiation incidental to its primary function (such as electron microscopes, electron beam welders, ion implantation equipment)?
7. Are there any mechanical hazards or work hazards such as material handling, elevated work, vacuum or pressure vessels, scaffolds, stored energy or structural considerations?
7i. Does any equipment operate at pressures above 15 psig or under a vacuum?
7k. Is any part of this system/operation involve a cryogenic system or dewar installation?
13. Are there any controls (i.e., ventilation, fume hoods, interlocks, personal protective equipment, HEPA filters/vacuum cleaners, medical monitoring) associated with this operation?
13b. Are interlocks used in this operation?

The following questions were answered YES and are considered a hazard rating of 1:

11. Will this operation require trained operators or close surveillance?
11b. Will operation require work outside normal working hours?
11c. Will this operation require 2-person rule?
11d. Will this operation require special attention in the event it is left unexpectedly for long periods of time?
11e. Will this operation require an emergency procedure due to unusual or complicated shutdown instructions?
11f. Will group operational procedures be required for normal operation of this equipment?

Follow-up Assignments (Ilan Ben-Zvi)

(2, 2a, 2a (1)) Please list keV of accelerator and general operating guidelines in analysis. Have this accelerator reviewed by the Radiation Safety Committee (RSC). Please contact the RSC Chair, Dana Beavis (x7124).

(2b, 2b (1), 2b (2), 2c, 2c(1)) RGDs require that they be inventoried and that surveys be conducted annually. If your device is not accounted for or is not surveyed annually contact Paul Bergh (x5992). Have this RGD reviewed by the Radiation Safety Committee (RSC). Also, note this registration in the analysis for your operation by the Radiation Safety Committee. Please contact the RSC Chair, Dana Beavis (x7124).

(7, 7i) The SHSD Safety Engineering Group, prior to use, must review pressure systems that operate at greater than 15 psig. Contact the ES&H Coordinator, Asher Etkin (x4006) for additional guidance. Note operating parameters in your analysis.

(7k) Inert cryogens greater than the safe volume in liters (calculated by dividing volume of workspace in cubic meters divided 14) and non-inert cryogens in quantities greater than 2 liters or 50 kg in the case of CO2 require review. Contact the ES&H Coordinator, Asher Etkin

(x4006) for additional guidance. Note operating parameters in your analysis. Also, see the Oxygen Deficiency Hazard Subject Area for guidance. If safe volume has been calculated for your area include this information in the analysis for your operation.

(11) Ensure the operation of the ERL Prototype magnet systems is incorporated into the C-AD Operations Procedure Manual; you will need to create a new Chapter in the OPM specifically for ERL Prototype operations. Contact Dave Passarello (x7277).

(11b, 11c, 11d, 11f) Internal group operational procedures must be developed for normal operations, and a list of trained personnel is required. Contact the QA Manager, Dave Passarello, x7277, to arrange for sign off on group procedures.

(11e) An emergency procedure must be developed in accordance with C-A OPM 3.0. Contact Peter Ingrassia (x4272).

(13, 13b) A logbook of interlock checks should be maintained in the vicinity of the equipment.

2.2 RF Systems for Superconducting Injector and Superconducting Cavity (Alex Zaltsman)

The ERL accelerator consists of a high brightness RF superconducting electron injector followed by a superconducting linac cryomodule used to accelerate electrons. The microwave power used to accelerate electrons in the superconducting electron injector are provided to the cavity by a 1 MW RF klystron delivered via two 500 kW fundamental power couplers at a frequency of 703.75 MHz. The microwave power used to accelerate electrons in the superconducting linac cryomodule is provided by a 50 kW CW IOC that also operates at a frequency of 703.75 MHz. The cavity resonates with microwave power fed through a port called the fundamental power coupler.

The exposure to non-ionizing RF radiation is controlled to prevent the radio frequency power generated by the klystrons from providing a source of personnel hazard. Personnel cannot be near the 1 MW klystron source during operations due to a coordinated key system preventing access to its enclosure. The accelerating RF is in a cabinet, and the entrance to the accelerator enclosure is interlocked during operation via the ERL PASS. Additionally, the radio frequency output power is confined to the vacuum enclosure of the klystrons and accelerator structures, which provides a redundant safety protection system. A break in the vacuum integrity of any of these systems would remove the insulation the system requires to continue generating this power. Finally, the high-power radio-frequency fields contained within the system's waveguides would be surveyed as described in Subject Area: Radiofrequency/Microwave Radiation, and it will be confirmed that ambient RF fields are well within the limits defined by the American Conference of Governmental Industrial Hygienists (ACGIH) and OSHA.

The emission of x-rays due to Bremsstrahlung from the 1 MW RF klystron is prevented via steel shield housing around the tube and tube base.

Hazard Rating and Follow-up Assignments for RF Systems for Injector and Superconducting Cavity (Alex Zaltsman)

Explanation of Hazard Rating

- 0 indicates an operation with minimal risk
- 1 indicates an operation with low initial risk
- 2 indicates an operation with moderate initial risk
- 3 indicates an operation with a high initial risk

Because of the hazards identified, this operation has the potential of being an operation with a high initial risk.

The following questions were answered YES and are considered a hazard rating of 3:

2b(1). Are radiation generating devices capable of creating a High Radiation Area (>100 mrem/hr at 30 centimeters)?

The following questions were answered YES and are considered a hazard rating of 2:

2. Are there any accelerators or other radiation generating devices involved in this operation?
2b. Are there any radiation generating devices (RGD) used in this operation?
2c. Does the radiation generating device only produce radiation incidental to its primary function (such as electron microscopes, electron beam welders, ion implantation equipment)?
8e. Is there any radiofrequency or microwave field generated by a source greater than 7 W in a space that might be occupied?
8f. Does this equipment/operation produce any magnetic fields greater than 4 Gauss?
8j. Is it required for personnel to work in an area with a Noise Level between 85 dBA and 100 dBA?
11b. Will operation require work outside normal working hours?
11d. Will this operation require special attention in the event is left unexpectedly for long periods of time?

(2, 2b, 2b (1), 2c) Radiation generating devices (RGDs) require that they be inventoried and that surveys be conducted annually. If your device is not accounted for or is not surveyed annually contact Paul Bergh (x5992). Also, note this registration in the radiation safety analysis for your operation by the Radiation Safety Committee. Please contact the RSC Chair, Dana Beavis (x7124).

(8e, 8f) Non-ionizing radiation sources (NIRs) must be listed on the C-A NIR inventory and may require measurements to be taken. If your equipment is not part of this inventory, please contact Asher Etkin, ES&H Coordinator, x4006, for further guidance.

(8f) Any workers with pacemakers or medical implants require training, and these workers may not be exposed to fields greater than 5 Gauss.

(8j) If workers can be potentially exposed to excessive noise, contact Peter Cirnigliaro (x5636) for a noise evaluation.

(11b, 11d) Internal group operational procedures must be developed for normal operations, and a list of trained personnel is required. Contact the QA Manager, Dave Passarello, x7277, to arrange for sign off on group procedures.

(11e) An emergency procedure must be developed. Contact Peter Ingrassia (x4272).

(13, 13b) A logbook of interlock checks should be maintained in the vicinity of the equipment.

(13c) All PPE requirements must be listed in your work planning documents. Special care must be given when selecting gloves. Always seek manufacture specific information on the gloves being used or contact the ESH Coordinator, Asher Etkin (x4006) for guidance.

2.3 Injector System (Andrew Burrill, Triveni Rao)

The injector system for the ERL is shown schematically below. The injection system is made up of several major subsystems; the superconducting RF photoinjector, the cryogenic system, the cathode insertion device, and the RF system.

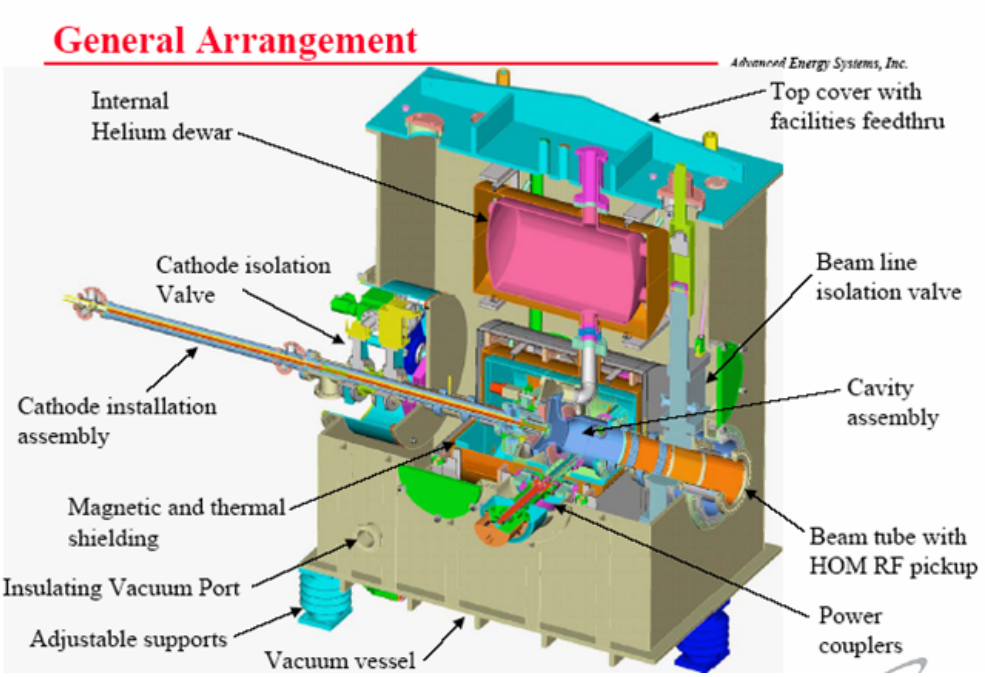

The photoinjector is an all niobium 703.75 MHz SRF cavity designed to operate at 2 K to produce and accelerate electrons. The microwave power to accelerate these electrons is provided to the cavity by a 1 MW RF klystron delivered via two 500 kW fundamental power couplers. As niobium is a superconductor at liquid helium temperatures, the surface resistance is effectively zero. This means that the microwave power fed to the cavity is almost exclusively delivered to accelerating the electrons, not heating of the niobium, allowing for CW high average current electron beam generation, part of the goal of this project. This means that the 1 MW RF power can deliver a 0.5 A, 2MeV electron beam to the ERL loop with minimal power dissipated to the liquid helium bath. During start up and conditioning, there may be dark current generated in the injector.

The cavity is cooled to superconducting temperatures using 4 K liquid helium provided via external dewars to the cryostat and internal helium reservoir shown in the schematic above. A large vacuum pump is then used to reduce the pressure over the liquid helium and thus reduce the temperature of the liquid helium to 2K, the desired operating temperature.

The electrons are generated using a laser irradiated multi-alkali (CsK_2Sb) photocathode which will be produced in a custom deposition system designed to mate to the cathode installation assembly shown above. The laser system used to irradiate these cathodes will be a Class IV laser system, tentatively with a repetition rate of ~87.75 MHz producing ~8 W of power in 10 ps pulses at 355 nm. The system will consist of an oscillator locked to a master RF clock that

drives the cavity, followed by a series of amplifier stages, pulse shaper/selector and harmonic crystals, the exact configuration still under investigation subject to vendor specifications. The laser beam will be transported to the photoinjector in enclosed beam pipes. The laser power will be low for initial alignment and increased gradually to full power.

Hazard Rating and Follow-up Assignments for Injector Systems (Andrew Burrill, Triveni Rao)

Explanation of Hazard Rating

- 0 indicates an operation with minimal risk
- 1 indicates an operation with low initial risk
- 2 indicates an operation with moderate initial risk
- 3 indicates an operation with a high initial risk

Because of the hazards identified, this operation has the potential of being an operation with a high initial risk.

The following questions were answered YES and are considered a hazard rating of 3:

2b(1). Are radiation generating devices capable of creating a High Radiation Area (>100 mrem/hr at 30 centimeters)?
2d. Is the radiation generating device an intentional x-ray generating device which produces radiation as part of the primary function (i.e. x-ray diffractometers, x-ray machines)?
5a. Do personnel use or have the potential to be exposed to Class 4 lasers?

The following questions were answered YES and are considered a hazard rating of 2:

1d. Does this operation use, generate or store flammable or combustible gases, liquids or solids, including solvents?
1e. Does this operation involve the use, storage or generation of caustic/corrosive chemicals or wastes?
2. Are there any accelerators or other radiation generating devices involved in this operation?
2b. Are there any radiation generating devices (RGD) used in this operation?
2b(2). Are the radiation generating devices capable of creating a radiation area?
5. Does this operation involve the use of lasers?
5b. Do personnel use or have the potential to be exposed to Class 3b lasers?
5d Does this operation involve Class1 lasers with embedded 3b or 4 lasers?
7c. Are there any structures supporting heavy loads?
7k. Is any part of this system/operation involve a cryogenic system or dewar installation?
8e. Is there any radiofrequency or microwave field generated by a source greater than 7W in a space that might be occupied?
8l. Is there any possibility of creating an Oxygen Deficient Atmosphere?
11b. Will operation require work outside normal working hours?
11d. Will this operation require special attention in the event is left unexpectedly for long periods of time?

13. Are there any controls (i.e., ventilation, fume hoods, interlocks, personal protective equipment, HEPA filters/vacuum cleaners, medical monitoring) associated with this operation?
13b. Are interlocks used in this operation?
13c. Is any personal protective equipment used in this operation?

The following questions were answered YES and are considered a hazard rating of 1:

1. Are there any chemicals, toxic materials, or hazardous materials handled, generated, used, or stored in this operation, including oils and solvents?
5c. Does the operation involve Class 1, 2 or 3a lasers?
7b. Does the operation include the use of hoist, crane, forklift, or rigging?
7f. Will this operation require any elevated work?
8h. Are there any surface temperatures less than 0 deg F or greater than 150 deg F?
10. Does this operation involve: the use of equipment, tools or materials outside of the design specifications or outside of the manufacturer's recommendations OR the use of equipment or apparatus not commercially available?
11. Will this operation require trained operators or close surveillance?
11c. Will this operation require the 2-person rule?

Follow-up Assignments (Andrew Burrill, Triveni Rao)

(1) Consult with Peter Cirnigliaro (x5636) and review the applicability of requirements in the Working with Chemicals SBMS Subject Area. Implement a process that requires you to review chemicals or hazardous materials with Peter Cirnigliaro (x5636) before they are introduced to ERL in the future.

(1d) For all flammable gases and liquids, a safe volume must not be exceeded. The safe volume is calculated by dividing the volume of the gaseous state of the flammable/combustible material by the total volume of the room and ensuring this number does not exceed ten percent of the lower flammability limit for the material. See Peter Cirnigliaro (x5636) for more information or assistance.

(1e) Work with caustic/corrosive chemicals must be done in an area with an eyewash and shower. See Peter Cirnigliaro (x5636) for more information or assistance.

(2b, 2b (1), 2b (2), 2d) RGDs require that they be inventoried and that surveys be conducted annually. If your device is not accounted for or is not surveyed annually contact Paul Bergh (x5992). Also, note this registration in the analysis for your operation by the Radiation Safety Committee. Please contact the RSC Chair, Dana Beavis (x7124).

(5, 5a, 5b, 5d) All class 3b and 4 lasers require evaluations by the Laser Safety Officer. If your laser has not been evaluated, complete the BNL General Laser Registration Form and return it to Asher Etkin (x4006). In addition, if you are going to use a Class 3b or 4 laser you must receive a medical laser eye exam prior to use. If you need a medical laser eye exam see Requirements for Laser Eye Examination in the Laser Safety Subject Area.

(5c) ANSI Z136.1 requires that Class 2 and 3a lasers have a protective housing and that they be labeled according to their Class. Also, obtain an evaluation from Asher Etkin (x4006) prior to viewing Class 2 or 3a beams through any kind of collecting optics such as microscopes and telescopes, which may concentrate the beam energy and increase the hazard.

(7b) Before using hoist, cranes or rigging equipment, ensure that current, valid annual inspection tags are attached. You need to ensure you add your equipment to the C-AD annual request for these services, notify Joel Scott (x7520).

(7b) Forklifts, powered trucks, platform lift trucks and motorized hand trucks require special training prior to use and require completion of a pre-use inspection. Contact the Training Manager, John Maraviglia (x7343), to ensure all personnel are assigned the correct training requirements.

(7c) Any structures supporting heavy loads or structural changes to cranes or buildings requires review by the Plant Engineering Division and the Chief Mechanical Engineer. Contact Joe Tuozzolo (x3966) for a review.

(7f) Elevated work may require fall protection and/or a fall protection plan. Consult with Peter Cirnigliaro (x5636).

(7k) Inert cryogens greater than the safe volume in liters (calculated by dividing volume of workspace in cubic meters divided 14) and non-inert cryogens in quantities greater than 2 liters or 50 kg in the case of CO2 require review. Contact the ES&H Coordinator, Asher Etkin (x4006) for additional guidance. Note operating parameters in your analysis. Also, see the Oxygen Deficiency Hazard Subject Area for guidance. If safe volume has been calculated for your area include this information in the analysis for your operation.

(8e) Non-ionizing radiation sources (NIR) sources must be listed on the C-A NIR inventory and may require measurements to be taken. If your equipment is not part of this inventory, please contact the ES&H Coordinator, Asher Etkin (x4006), for further guidance.

(8h) Surface with temperatures less than 0 deg F or greater than 150 deg F must be labeled, please contact the ES&H Coordinator, Asher Etkin (x4006), for further guidance.

(8l) The guidelines of SBMS Subject Area, Oxygen Deficiency Hazard should be followed.

(10) Please list the equipment that you are using outside of design specifications or manufacturer recommendations and/or locally built equipment in your analysis along with associated controls. Certification by the Chief Electrical and/or Chief Mechanical Engineer may be required. Contact Jon Sandberg (x4682) for electrical device review and Joe Tuozzolo (x3966) for mechanical device review.

(11) Ensure the operation of the ERL magnet systems is incorporated into the C-AD Operations Procedure Manual, in the Chapter assigned to ERL Procedures. Contact Dave Passarello (7277).

(11b, 11d) Internal group operational procedures must be developed for normal operations, and a list of trained personnel is required. Contact the QA Manager, Dave Passarello, x7277, to arrange for sign off on group procedures.

(11c) In your procedures, delineate any tasks that require a two-person rule as a control.

(13, 13b) A logbook of interlock checks should be maintained in the vicinity of the equipment.

(13c) All PPE requirements must be listed in your analysis. Special care must be given when selecting gloves. Always seek manufacture specific information on the gloves being used or contact the ESH Coordinator, Asher Etkin (x4006) for guidance.

2.4 Cryogenic Systems (Dewey Lederle)

2.4.1 Ballast tank - Designing and constructing a liquid helium storage volume mounted above the 5 cell cavity. Its purpose is to provide operational time at 2K for the cavity.
2.4.2 1.1 K Vacuum Pump - Specifying and purchasing a vacuum pump for sub cooling the boiling liquid helium.
2.4.3 Warm Piping - Design and installation of ambient temperature piping associated with the ERL cryogenic system.
2.4.4 Transfer Line - Specification and purchasing cryogenic transfer lines to supply liquid helium to the 5 cell cavity.
2.4.5 Instrumentation - Pressure and Temperature Instrumentation and their associated I/O and hardware.
2.4.6 Insulating Vacuum System - Vacuum pump to maintain insulating vacuums.
2.4.7 Process Pressure Relief Valves - Sizing and purchasing relief valves for the ERL cryogenic system.
2.4.8 Installation - Installation of the ERL cryogenic system.
2.4.9 Commissioning - Commissioning of the ERL cryogenic system.

Hazard Rating and Follow-up Assignments for Cryogenic Systems (Dewey Lederle)

Explanation of Hazard Rating

- 0 indicates an operation with minimal risk
- 1 indicates an operation with low initial risk
- 2 indicates an operation with moderate initial risk
- 3 indicates an operation with a high initial risk

Because of the hazards identified, this operation has the potential of being an operation with a moderate initial risk.

The following questions were answered YES and are considered a hazard rating of 2:

1d. Does this operation use, generate or store flammable or combustible gases, liquids or solids, including solvents?
7c. Are there any structures supporting heavy loads?
7k. Is any part of this system/operation involve a cryogenic system or dewar installation?
7m. Are there any sources of stored energy (hydraulic, pneumatic, thermal, mechanical)?
11e. Will this operation require an emergency procedure due to unusual or complicated shutdown instructions?
13. Are there any controls (i.e., ventilation, fume hoods, interlocks, personal protective equipment, HEPA filters/vacuum cleaners, medical monitoring) associated with this operation?
13b. Are interlocks used in this operation?
13c. Is any personal protective equipment used in this operation?

The following questions were answered YES and are considered a hazard rating of 1:

1. Are there any chemicals, toxic materials, or hazardous materials handled, generated, used, or stored in this operation, including oils and solvents?
7e. Will you be purchasing any ladders or scaffolds?
11. Will this operation require trained operators or close surveillance?

Follow-up Assignments (Dewey Lederle)

(1) Consult with Peter Cirnigliaro (x5636) and review the applicability of requirements in the Working with Chemicals SBMS Subject Area. Implement a process that requires you to review chemicals or hazardous materials with Peter Cirnigliaro (x5636) before they are introduced to ERL in the future.

(1d) For all flammable gases and liquids, a safe volume must not be exceeded. The safe volume is calculated by dividing the volume of the gaseous state of the flammable/combustible material by the total volume of the room and ensuring this number does not exceed ten percent of the lower flammability limit for the material. See Peter Cirnigliaro (x5636) for more information or assistance.

(7c) Any structures supporting heavy loads or structural changes to cranes or buildings requires review by the Plant Engineering Division and the Chief Mechanical Engineer. Contact Joe Tuozzolo (x3966) for a review.

(7e) Ladders must be wooden. Scaffolding must be reviewed by the C-AD ESH Coordinator. Please contact Asher Etkin (x4006).

(7k) Inert cryogens greater than the safe volume in liters (calculated by dividing volume of workspace in cubic meters divided 14) and non-inert cryogens in quantities greater than 2 liters or 50 kg in the case of CO2 require review. Contact the ES&H Coordinator, Asher Etkin (x4006) for additional guidance. Note operating parameters in your analysis. Also, see the Oxygen Deficiency Hazard Subject Area for guidance. If safe volume has been calculated for your area include this information in the analysis for your operation.

(7m) All sources of stored energy must be locked out or disabled prior to working on systems.

(11) Ensure the operation of the ERL cryogenic systems is incorporated into the C-AD Operations Procedure Manual Chapter 7, Cryogenic Operations. All cryogenic systems require review and approval by the Laboratory Cryogenic Safety Sub-Committee prior to operations. Contact E. Lessard, x4250.

(11e) An emergency procedure must be developed in accordance with C-A OPM 3.0. Contact Peter Ingrassia (x4272).

(13, 13b) A logbook of interlock checks should be maintained in the vicinity of the equipment.

(13c) All PPE requirements must be listed in your analysis. Special care must be given when selecting gloves. Always seek manufacture specific information on the gloves being used or contact the ESH Coordinator, Asher Etkin (x4006) for guidance.

2.5 Vacuum Systems (Dick Hseuh)

2.5.1 Vacuum Chambers - Design, fabrication and installation of stainless steel and aluminum vacuum chambers and beam pipes for ERL loop vacuum system.
2.5.2 Vacuum Pumps and Valves - Design, procurement and installation of high vacuum pumps for ERL loop vacuum systems.
2.5.3 Design and procurement of the vacuum gauges and control PLC and PC for ERL loop vacuum system. PLC and PC programming of ERL vacuum monitoring and control system.

Hazard Rating and Follow-up Assignments for Vacuum Systems (Dick Hseuh)

Explanation of Hazard Rating

- 0 indicates an operation with minimal risk
- 1 indicates an operation with low initial risk
- 2 indicates an operation with moderate initial risk
- 3 indicates an operation with a high initial risk

Because of the hazards identified, this operation has the potential of being an operation with a moderate initial risk.

The following questions were answered YES and are considered a hazard rating of 2:

7m. Are there any sources of stored energy (hydraulic, pneumatic, thermal, mechanical)?

The following questions were answered YES and are considered a hazard rating of 1:

7l. Does the operation include the use of typical shop equipment?
11. Will this operation require trained operators or close surveillance?
11a. Will this operation be left unattended?
11f. Will group operational procedures be required for normal operation of this equipment?

Follow-up Assignments (Dick Hseuh)

(7l) Electrically powered hand tools should be double insulated and plugged into grounded system.

(7m) All sources of stored energy must be locked out or disabled prior to working on systems.

(11, 11a) If your operation will be left unattended and it poses a hazard to individuals who may enter the area for whatever reason then you must ensure that the area is posted with the name of the contact and phone number along with associated hazards when unattended.

(11f) Internal group operational procedures must be developed for normal operations, and a list of trained personnel is required.

2.6 Magnet Systems (George Mahler)

The ERL magnet systems include 4 injection-line dipoles, 1 dump magnet, and the ring magnets. The ring magnets include 25 quadrupoles and 6 dipoles.

The electrical power for the accelerator is distributed at 480 volts, 3 phases with a high-resistance grounded delta system. The equipment that requires the 480 line voltage includes the ring magnet, dump magnet and injection-line magnet power supplies. The installation and operation of this power distribution system is according to standard industrial practice for this type of equipment. The safety codes used include the National Electric Code, and the Code of Federal Regulations 10 CFR 851, Worker Safety and Health Program.

Hazard Rating and Follow-up Assignments for Magnet Systems (George Mahler)

Explanation of Hazard Rating

- 0 indicates an operation with minimal risk
- 1 indicates an operation with low initial risk
- 2 indicates an operation with moderate initial risk
- 3 indicates an operation with a high initial risk

Because of the hazards identified, this operation has the potential of being an operation with a high initial risk.

The following questions were answered YES and are considered a hazard rating of 3:

6c. Is it required for personnel to work on energized systems greater than 600 V (Range D)?

The following questions were answered YES and are considered a hazard rating of 2:

6a. Is there any exposed electrical components where there is the potential for personnel to be exposed to voltages greater than 50V (Range A)?
6b. Is it required for personnel to work on energized systems greater than 50V (Range A) but less than 600 V (Range B&C)?
6d. Has this equipment been built locally, modified or NOT listed by a Nationally Recognized Testing Laboratory?
7c. Are there any structures supporting heavy loads?
7m. Are there any sources of stored energy (hydraulic, pneumatic, thermal, mechanical)?
8f. Does this equipment/operation produce any magnetic fields greater than 4 Gauss?
8g. Is it required for personnel to be exposed to a magnetic field greater than 600 Gauss?
8l. Is there any possibility of creating an Oxygen Deficient Atmosphere?
11b. Will operation require work outside normal working hours?
11d. Will this operation require special attention in the event is left unexpectedly for long periods of time?
12b. Does this operation generate, store or use any combustible materials in significant

quantities?
12d. Will this operation change the risk level of fire protection?
13. Are there any controls (i.e., ventilation, fume hoods, interlocks, personal protective equipment, HEPA filters/vacuum cleaners, medical monitoring) associated with this operation?
13b. Are interlocks used in this operation?
13c. Is any personal protective equipment used in this operation?

The following questions were answered YES and are considered a hazard rating of 1:

7b. Does the operation include the use of hoist, crane, forklift, or rigging?
7l. Does the operation include the use of typical shop equipment?
8h. Are there any surface temperatures less than 0 deg F or greater than 150 deg F?
10. Does this operation involve: the use of equipment, tools or materials outside of the design specifications or outside of the manufacturer's recommendations OR the use of equipment or apparatus not commercially available?
11. Will this operation require trained operators or close surveillance?
11c. Will this operation require the 2-person rule?
12e. Could this equipment act as an ignition source?

Follow-up Assignments (George Mahler)

(6) All personnel working with electrical systems must have Electrical Safety and Lockout/Tagout training. It is your responsibility to ensure all personnel are trained prior to working. Contact the Training Manager, John Maraviglia (x7343), to ensure all personnel are assigned the correct training requirements.

(6b, 6c) Working Hot training is required for work on energized equipment. Contact the Training Manager, John Maraviglia (x7343), to ensure all personnel are assigned the correct training requirements.

(6d) The Chief Electrical Engineer must certify devices that are not commercially available. Contact Jon Sandberg (x4682).

(7b) Before using hoist, cranes or rigging equipment, ensure that current, valid annual inspection tags are attached. You need to ensure you add your equipment to the C-AD annual request for these services, notify Joel Scott (x7520).

(7b) Forklifts, powered trucks, platform lift trucks and motorized hand trucks require special training prior to use and require completion of a pre-use inspection. Contact the Training Manager, John Maraviglia (x7343), to ensure all personnel are assigned the correct training requirements.

(7c) Any structures supporting heavy loads or structural changes to cranes or buildings requires review by the Plant Engineering Division and the Chief Mechanical Engineer. Contact Joe Tuozzolo (x3966) for a review.

(7l) Electrically powered hand tools should be double insulated and plugged into grounded system.

(7m) All sources of stored energy must be locked out or disabled prior to working on systems.

(8f, 8g) Any workers with pacemakers or medical implants require training, and may not be exposed to fields greater than 5 Gauss. Workers have 8-hour time-weighted average exposure limits of 600 Gauss to the whole body. Please contact the ES&H Coordinator, Asher Etkin (x4006), for further guidance.

(8h) Surface with temperatures less than 0 deg F or greater than 150 deg F must be labeled, please contact the ES&H Coordinator, Asher Etkin (x4006), for further guidance.

(8l) The guidelines of SBMS Subject Area, Oxygen Deficiency Hazard should be followed.

(10) Please list the equipment that you are using outside of design specifications or manufacturer recommendations and/or locally built equipment in your analysis along with associated controls. Certification by the Chief Electrical and/or Chief Mechanical Engineer may be required. Contact Jon Sandberg (x4682) for electrical device review and Joe Tuozzolo (x3966) for mechanical device review.

(11) Ensure the operation of the ERL magnet systems is incorporated into the C-AD Operations Procedure Manual. Contact Dave Passarello (x7277).

(11b, 11d) Internal group operational procedures must be developed for normal operations, and a list of trained personnel is required. Contact the QA Manager, Dave Passarello, x7277, to arrange for sign off on group procedures.

(11c) In your procedures, delineate any tasks that require a two-person rule as a control.

(12b, 12e) The Fire Protection Engineer must approve generation, storage or use of combustible materials in significant quantities; in addition, nearby ignition sources must be reviewed. Contact Michael Kretschmann (x5274).

(12d) Any deviations from Life Safety Code or change in the risk level of fire protection must be approved by the Fire Protection Engineer. Contact Michael Kretschmann (x5274).

(13b) A logbook of interlock checks should be maintained in the vicinity of the equipment.

(13c) All PPE requirements must be listed in your analysis. Special care must be given when selecting gloves. Always seek manufacture specific information on the gloves being used or contact the ESH Coordinator, Asher Etkin (x4006) for guidance.

2.7 Magnet Electrical Systems (Bob Lambiase)

2.7.1 Large Unipolar Power Supplies - Design, manufacture, install and test Large Unipolar Power Supplies
2.7.2 Small Unipolar Power Supplies - Design, manufacture, install and test Small Unipolar Power Supplies
2.7.3 Bipolar Trim Power Supplies - Design, manufacture, install and test Bipolar Trim Power Supplies
2.7.4 Bipolar Steering Power Supplies - Design, manufacture, install and test Bipolar Steering Power Supplies
2.7.5 D5 Power Supplies - Design, manufacture, install and test D5 Power Supplies and cable.
2.7.6 DC Cable for Power Supplies - Design, manufacture, install and test cable for 2.7.1 through 2.7.4

Hazard Rating and Follow-up Assignments for Electrical Systems (Bob Lambiase)

Explanation of Hazard Rating

- 0 indicates an operation with minimal risk
- 1 indicates an operation with low initial risk
- 2 indicates an operation with moderate initial risk
- 3 indicates an operation with a high initial risk

Because of the hazards identified, this operation has the potential of being an operation with a moderate initial risk.

The following question was answered YES and is considered a hazard rating of 2:

6d. Has this equipment been built locally, modified or NOT listed by a Nationally Recognized Testing Laboratory?

The following questions were answered YES and are considered a hazard rating of 1:

7b. Does the operation include the use of hoist, crane, forklift, or rigging?
11a. Will this operation be left unattended?

Follow-up Assignments (Bob Lambiase)

(6) All personnel working with electrical systems must have Electrical Safety and Lockout/Tagout training. It is your responsibility to ensure all personnel are trained prior to working. Contact the Training Manager, John Maraviglia (x7343), to ensure all personnel are assigned the correct training requirements.

(6d) The Chief Electrical Engineer must certify devices that are not commercially available. Contact Jon Sandberg (x4682).

(7b) Before using hoist, cranes or rigging equipment, ensure that current, valid annual inspection tags are attached. You need to ensure you add your equipment to the C-AD annual request for these services, notify Joel Scott (x7520).

(7b) Forklifts, powered trucks, platform lift trucks and motorized hand trucks require special training prior to use and require completion of a pre-use inspection. Contact the Training Manager, John Maraviglia (x7343), to ensure all personnel are assigned the correct training requirements.

(11, 11a) If your operation will be left unattended and it poses a hazard to individuals who may enter the area for whatever reason then you must ensure that the area is posted with the name of the contact and phone number along with associated hazards when unattended.

2.8 Electron Beam Dump Systems (Ady Hershcovitch)

As its name suggests, the beam dump is where electron bunches end up while depositing energy unrecovered by the ERL. Energy of ERL discarded electrons will be either 2 or 5 MeV. Under present design, the beam will impinge on a flat water-cooled, copper plate measuring approximately 36 inch by 48 inch. This large area is to insure that local boiling of the cooling water does not occur. The beam will be spread over this large surface area by rastering it with magnetic field coils. One set of coils will be for vertical scanning and the second set for horizontal scanning.

The rectangular beam dump will be attached to the end of a stainless steel scan chamber. The beam dump will have an overall length of approximately 9 feet. The width of the device will depend on the mounting orientation and could range from 4 to 5 feet depending on the preferred orientation of the copper plate. Average cross section of the copper beam dump plate is approximately 1 inch thick, and it has approximately 80 percent copper and the water channels constitute about 20 percent of its volume. Average cross section of the stainless steel scan chamber walls is approximately 0.375 inches thick and it has approximately 94 percent stainless steel and 6 percent water by volume.

Hazard Rating and Follow-up Assignments for Electron Beam Dump Systems (Ady Hershcovitch)

Explanation of Hazard Rating

- 0 indicates an operation with minimal risk
- 1 indicates an operation with low initial risk
- 2 indicates an operation with moderate initial risk
- 3 indicates an operation with a high initial risk

Because of the hazards identified, this operation has the potential of being an operation with a high initial risk.

The following question was answered YES and is considered a hazard rating of 3:

2b(1). Are radiation generating devices capable of creating a High Radiation Area (>100 mrem/hr at 30 centimeters)?

The following questions were answered YES and are considered a hazard rating of 2:

2. Are there any accelerators or other radiation generating devices involved in this operation?
2b. Are there any radiation generating devices (RGD) used in this operation?
2b(2). Are the radiation generating devices capable of creating a radiation area?
2c. Does the radiation generating device only produce radiation incidental to its primary function (such as electron microscopes, electron beam welders, ion implantation equipment)?

Follow-up Assignment (Ady Hershcovitch)

(2, 2b, 2b(2), 2c) Please indicate the energy deposition, heat transfer properties and potential activation of the beam dump and cooling water15 and general operating guidelines of the beam dump in an analysis. Have this analysis reviewed by the Radiation Safety Committee (RSC). Even though this beam dump is not an "experiment", please refer to OPM 9.1.15, Radiological Review Criteria for Collider-Accelerator Experiments and Procedures, as it may be useful guidance in preparing for the RSC review. Please contact the RSC Chair, Dana Beavis (x7124).

2.9 Beam Instrumentation (Pete Cameron)

Beam Instrumentation is functionally divided into subsystems; position monitors, current monitors, profile monitors, and loss monitors. Beam Instrumentation specialists will provide the beam line sensors, signal and control cables, readout electronics and software for these subsystems. The majority of the hardware and software is not available commercially off-the-shelf, but rather is designed and produced specific to the intended function. With the exception of loss monitors, all sensors will be integral to the vacuum envelope. None of the subsystems will be interfaced to the personnel protection system. Initially, the loss monitors will be interfaced to the machine protection system, and possibly the current monitors. As operational experience is gained, portions of additional subsystems may be interfaced to the machine protection system.

Hazard Rating and Follow-up Assignments for Beam Instrumentation (Pete Cameron)

Explanation of Hazard Rating

- 0 indicates an operation with minimal risk
- 1 indicates an operation with low initial risk
- 2 indicates an operation with moderate initial risk
- 3 indicates an operation with a high initial risk

Because of the hazards identified, this operation has the potential of being an operation with a moderate initial risk.

The following questions were answered YES and is considered a hazard rating of 2:

5. Does this operation involve the use of lasers?
6b. Is it required for personnel to work on energized systems greater than 50V (Range A) but less than 600 V (Range B&C)?
6d. Has this equipment been built locally, modified or NOT listed by a Nationally Recognized Testing Laboratory?
6e. Does your operation require the development of an Electrical Hot Work Permit (EHWP)?
8f. Does this equipment/operation produce any magnetic fields greater than 4 Gauss?
8m. Is it required for any personnel to work in an existing Oxygen Deficiency Hazard Area?

Follow-up Assignments (**Pete Cameron**)

(5) If you use a laser in the instrumentation, then the laser must be evaluated. Upon purchase, please complete the BNL General Laser Registration Form and return it to Asher Etkin (x4006).

(6b, 6c) Electrical Safety Training is required for work on energized equipment. Contact the Training Manager, John Maraviglia (x7343), to ensure all personnel are assigned the correct training requirements.

(6d) The Chief Electrical Engineer must certify devices that are not commercially available. Contact Jon Sandberg (x4682).

(6e) The Chief Electrical Engineer must be contacted to authorize Permits for Working on or Near Energized Parts. Contact Jon Sandberg (x4682).

(8f) Any workers with pacemakers or medical implants require training, and may not be exposed to fields greater than 5 Gauss.

(8m) If the ERL area you will work in is classified an ODH Area, then you will require ODH training. Please contact the Training Manager, John Maraviglia (x7343), to ensure all personnel are assigned the correct training requirements.

2.10 Control Systems (Brian Oerter)

The ERL control system shall be an extension of the RHIC controls system. To the maximum degree possible, solutions chosen for the ERL system shall be appropriate for the RHIC e-Cooling facility. The basic elements of the system will comprise a networked family of front-end interfaces connected via Ethernet to ERL control console workstations and to central C-AD servers.

2.10.1 Network and Links

Existing fiber optic infrastructure in Building 912 will provide access to the C-AD controls subnet, with switched 100 Mbit Ethernet on copper to individual front-end nodes and console computers. The standard controls interface infrastructure will comprise VME chassis, CPU, utility link interface, battery-backed SRAM, event decoder-delay modules, remote power reset, and terminal server for serial port access to CPUs. Some engineering may be needed for module redesign driven by parts obsolescence. Software support for an updated CPU will also be needed.

The C-AD Real-Time Data Link (RTDL) will be delivered via fiber to provide the facility-standard, time-of-day reference for all front-end chassis. This time base will be common to all logged data. Pulse timing will be provided by a local version of the standard Event Link system with provision for encoded events. It will provide a standard real-time clock and asynchronous, software- or hardware-initiated encoded event signals for triggering equipment.
A fast beam inhibit system will be required to protect the equipment from uncontrolled operation of the high power beam. It will be patterned after the present RHIC/AGS systems. Equipment will indicate, *"operation permitted"*, by providing a fail-safe current signal to one of 24 input channels. The system will be modular so that additional inputs may be added economically. Redundancy will be provided as needed to drive *critical devices* used to shut off the system. New software will be required to manage the specifics of the ERL system.

2.10.2 Control Console

A work console composed of standard 19-inch racks with writing shelf attachments will be provided in the facility control room. Each of 3 "seats" will be equipped with a Linux workstation and 4 flat-panel monitors, configured as a single continuous display resource. Rack space will be provided at the console for some other rack-mounted equipment, telephone, and the access control system panel display and key-tree. A color printer will also be provided. General purpose and project-specific application software for operating and monitoring the equipment and beam characteristics will be provided. It is expected that a majority of the required services will be met by existing software tools for simple device control, sequencing, data logging, comfort displays, alarms, and e-log. In addition, the RHIC *post mortem* system, that comprises automatic data recording by front-ends after an *abort* and associated display and summary tools, will be adapted for ERL fast beam inhibit response.

Power supply control:

DC power supplies will be connected to the Accelerator Control System via standard PSI to PSC interfaces. 16-bit resolution will be used for setpoints and readbacks.

Beam Dump:

The residual energy of the beam after recovering most of the energy will be about 1 megawatt. The beam will be spread across the face of the beam dump to prevent hotspots. Dump power supply controls will have synchronized horizontal and vertical waveforms to provide the sweep. A monitoring system shall be developed to monitor the sweep and verify proper operation as input to a fast beam permit system. A commercial DSP module will monitor the sweep waveform and the power supply current to see that they are within defined limits, either high or low. The controls hardware group will develop the DSP software. Software drivers and a pet page to configure and monitor the DSP status will be required. State control and status for the dump supplies will be via a PLC. Some additional digital monitoring (interlocks) may be required.

Vacuum and water cooling for the dump will be included in the vacuum and conventional systems. Beam current monitoring of the dump will be provided by instrumentation.

Instrumentation:

A new BPM module (VME) will be developed by the Instrumentation group. There will be16 planes of BPMs. A VME chassis and standard front-end electronics will be provided by Accelerator Controls for these modules.

There will be two Bergoz current transformers. The output will be a DC level, digitized via standard Accelerator Controls ADC.

Loss monitors shall consist of analog electronics (instrumentation), a comparator module (instrumentation) and a channel by channel DC reference (controls, VMIC 4140) this is to monitor losses for a fast permit input. A fast digitizer, in VME form factor, will be used for data acquisition of the loss monitor system.

Synchrotron Light: Four cameras brought to two PCs.

RF:

Standard infrastructure modules and a VME64X chassis are the only components supplied by the Accelerator controls group.

Vacuum:

The vacuum interface to the controls system will be via a PLC communicating on Ethernet.

Timing:

A separate timing system will be provided to allow timing independent of the AGS, Booster or RHIC. The timing system will not be beam synchronous. Any synchronous data acquisition will use a direct timing signal from the RF.

There will be three basic modes of operation:

- Commissioning: low duty factor, about 100Hz rep rate. One bunch per pulse.
- RHIC mode: 9.37 MHz operation
- "Navy" mode: 700 MHz continuous.

Photocathode (injector):

Injector controls will consist of four axis of motion for mirrors to accurately direct beam to the photocathode. One axis of motion is needed to control a polarizing filter to control intensity. A 'scope' will be used to monitor the photodiode. The photodiode signal is a pulsed signal.

A new injection ramp "chopper" module will be designed to support the three modes of operation and to provide a ramp-up of beam intensity. As designed, the RF cavity can only accelerate one bunch without suffering a droop in cavity voltage. When that initial bunch returns to the cavity (after one turn), out of phase, all but a small amount of its energy is recovered. This allows a new bunch to be accelerated with the recovered energy, plus a second bunch. The new beam intensity ramp module will provide a gate to control how many bunches are injected and to smoothly increase the number of bunches in the ring. The bunch intensity gate must be synchronized to the 700 MHz RF in order to rise and fall between bunches. The ramp up in intensity of the beam has to be synchronized to the revolution period of the ring in order to take advantage of the energy recovery of the previously injected bunches. This will limit the droop of the RF cavity. A fine delay of some sort will be necessary, on board, to fine tune the gate taking into account propagation delay to the injector. Inputs to the module will be the rotation clock and 700 MHz RF clock. A synchronous gate will be output. Signal levels of inputs and outputs are to be determined. A pet page will be necessary for the new ramp module to control ERL "mode" increment rate and adjust fine timing delay values.

Hazard Rating and Follow-up Assignments for Controls (Brian Oeter)

Explanation of Hazard Rating

- 0 indicates an operation with minimal risk
- 1 indicates an operation with low initial risk
- 2 indicates an operation with moderate initial risk
- 3 indicates an operation with a high initial risk

Because of the hazards identified, this operation has the potential of being an operation with a moderate initial risk.

The following questions were answered YES and is considered a hazard rating of 2:

6d. Has this equipment been built locally, modified or NOT listed by a Nationally Recognized Testing Laboratory?
11b. Will operation require work outside normal working hours?
11d. Will this operation require special attention in the event is left unexpectedly for long periods of time?
15. Are you aware of any other hazardous conditions or potential sources of hazards that have not previously been addressed by these questions that you feel deserve further consideration?

The following question was answered YES and is considered a hazard rating of 1:

12e. Could this equipment act as an ignition source?

Follow-up Assignments (**Brian Oerter**)

(6d) The Chief Electrical Engineer must certify devices that are not commercially available. Contact Jon Sandberg (x4682).

(11b, 11d) Internal group operational procedures must be developed for normal operations, and a list of trained personnel is required. Contact the QA Manager, Dave Passarello, x7277, to arrange for sign off on group procedures.

(15) Since beam rastering is required from an equipment protection standpoint; that is, to prevent melting of the face of the beam dump, and since the control system will be used to ensure the magnetic field coils used in the rastering are operational, please contact J. W. Glenn, Chair of the Accelerator Systems Safety Review Committee (x4770), to ensure additional control is not required from a safety or environmental standpoint.

2.11 Not Assigned

2.12 Conventional Facilities (Dave Phillips)

The conventional facilities service the needs of ERL with building space, environmental control (HVAC), cooling water, electric power, cable tray, radiation shielding, fire detection, rigging and survey. Located inside the NEBA section of Building 912 is the 4-foot thick concrete "Block House", the Klystron Power Supply Building and a 2-story equipment building. The Block House will require rigging to open and close the roof to allow the larger pieces of experimental equipment to be installed. The Klystron Power Supply Building is to be installed by an outside vendor. The equipment building will house security, vacuum and cryogenic control systems, magnet power supplies, a laser room and the Klystron. Outside of NEBA are the Experimental Control Room, two equipment buildings and Building 966, which is office and work space.

Hazard Rating and Follow-up Assignments for Conventional Facilities (Dave Phillips)

Explanation of Hazard Rating

- 0 indicates an operation with minimal risk
- 1 indicates an operation with low initial risk
- 2 indicates an operation with moderate initial risk
- 3 indicates an operation with a high initial risk

Because of the hazards identified, this operation has the potential of being an operation with a moderate initial risk.

The following question was answered YES and is considered a hazard rating of 2:

5. Does this operation involve the use of lasers?
6d. Has this equipment been built locally, modified or NOT listed by a Nationally Recognized Testing Laboratory?
7c. Are there any structures supporting heavy loads?
7g. Does work require fall protection equipment (harness, lanyard)?
7m. Are there any sources of stored energy (hydraulic, pneumatic, thermal, mechanical)?
8j. Is it required for personnel to work in an area with a Noise Level between 85 dBA and 100 dBA?
11b. Will operation require work outside normal working hours?
12d. Will this operation change the risk level of fire protection?
13. Are there any controls (i.e., ventilation, fume hoods, interlocks, personal protective equipment, HEPA filters/vacuum cleaners,
medical monitoring) associated with this operation?
13c. Is any personal protective equipment used in this operation?

The following questions were answered YES and are considered a hazard rating of 1:

3. Are radioactive materials (including sealed sources and wastes) generated, handled, processed, used or stored?

3a. Does this operation involve handling of radioactive materials or sources?
7b. Does the operation include the use of hoist, crane, forklift, or rigging?
7e. Will you be purchasing any ladders or scaffolds?
7f. Will this operation require any elevated work?
7l. Does the operation include the use of typical shop equipment?
11. Will this operation require trained operators or close surveillance?
11a. Will this operation be left unattended?
11f. Will group operational procedures be required for normal operation of this equipment?
12e. Could this equipment act as an ignition source?

Follow-up Assignment (Dave Phillips)

(3) Work with radioactive materials such as activated shield blocks may require an RWP. Contact the FSS Representative, Paul Bergh (x5992).

(3a) If the ERL enclosure will make use of C-AD's activated shield blocks, appropriate posting and radioactive material controls are required. Contact the FSS Representative, Paul Bergh (x5992).

(5) Since the Survey Group may purchase a new Tracker Laser for this project, have the laser evaluated. Complete the BNL General Laser Registration Form and return it to Asher Etkin (x4006).

(6d) The Chief Electrical Engineer must certify devices that are not commercially available. Contact Jon Sandberg (x4682).

(7b) Before using hoist, cranes or rigging equipment, ensure that current, valid annual inspection tags are attached. You need to ensure you add your equipment to the C-AD annual request for these services, notify Joel Scott (x7520).

(7b) Forklifts, powered trucks, platform lift trucks and motorized hand trucks require special training prior to use and require completion of a pre-use inspection. Contact the Training Manager, John Maraviglia (x7343), to ensure all personnel are assigned the correct training requirements.

(7c) Any structures supporting heavy loads or structural changes to cranes or buildings requires review by the Plant Engineering Division and the Chief Mechanical Engineer. Contact Joe Tuozzolo (x3966) for a review.

(7e) Ladders must not be wooden. Scaffolding must be reviewed by the C-AD ESH Coordinator. Please contact Asher Etkin (x4006).

(7f) Elevated work may require fall protection and/or a fall protection plan. Consult with Peter Cirnigliaro (x5636).

(7g) Personnel wearing fall protection equipment must be trained. Contact the Training Manager, John Maraviglia (x7343), to ensure all personnel are assigned the correct training requirements.

(7l) Electrically powered hand tools should be double insulated and plugged into grounded system.

(7m) All sources of stored energy must be locked out or disabled prior to working on systems.

(8j) If workers can be potentially exposed to excessive noise, contact Peter Cirnigliaro (x5636) for a noise evaluation.

(11, 11b, 11f) Ensure the safe operation of the cooling-water systems and other conventional facilities are incorporated into procedures; use the C-AD Operations Procedure Manual or create Group procedures. Contact Joel Scot for review of water system procedures (x7520).

(11a) If conventional facilities operations will be left unattended and it poses a hazard to individuals who may enter the area for whatever reason then you must ensure that the area is posted with the name of the contact and phone number along with associated hazards when unattended. This information and instructions for a safe shutdown should be included in Group procedures or the C-AD OPM.

(12d, 12e) Any deviations from Life Safety Code or change in the risk level of fire protection must be approved by the Fire Protection Engineer. The Fire Protection Engineer should also review potential ignition sources. Contact Michael Kretschmann (x5274).

(13, 13c) All PPE requirements must be listed in your work planning documents. Special care must be given when selecting gloves. Always seek manufacture specific information on the gloves being used or contact Peter Cirnigliaro (x5636) for guidance.

2.13 Safety Systems (Jonathan Reich)

The proposed Access Control Safety system (ACS) for the eCooler and ERL facility will use Programmable Logic Controllers [PLC] as the basis of the system. In order to provide the required dual independent protection the area served by ACS has two independent PLC's [A and B divisions]. Each division independently provides full protection. All the I/O's (gate switches, critical devices, etc.) are redundantly monitored by both PLC systems. In addition, redundant monitoring of radiation level and ODH concerns will be incorporated in the safety system.

The Control Room (CR) operator interface utilizes touch screen displays [flat panels] on a command network that is connected through a firewall machine to the separate divisions. See block diagram on next page (Figure 1).

eCooler PASS BLOCK DIAGRAM

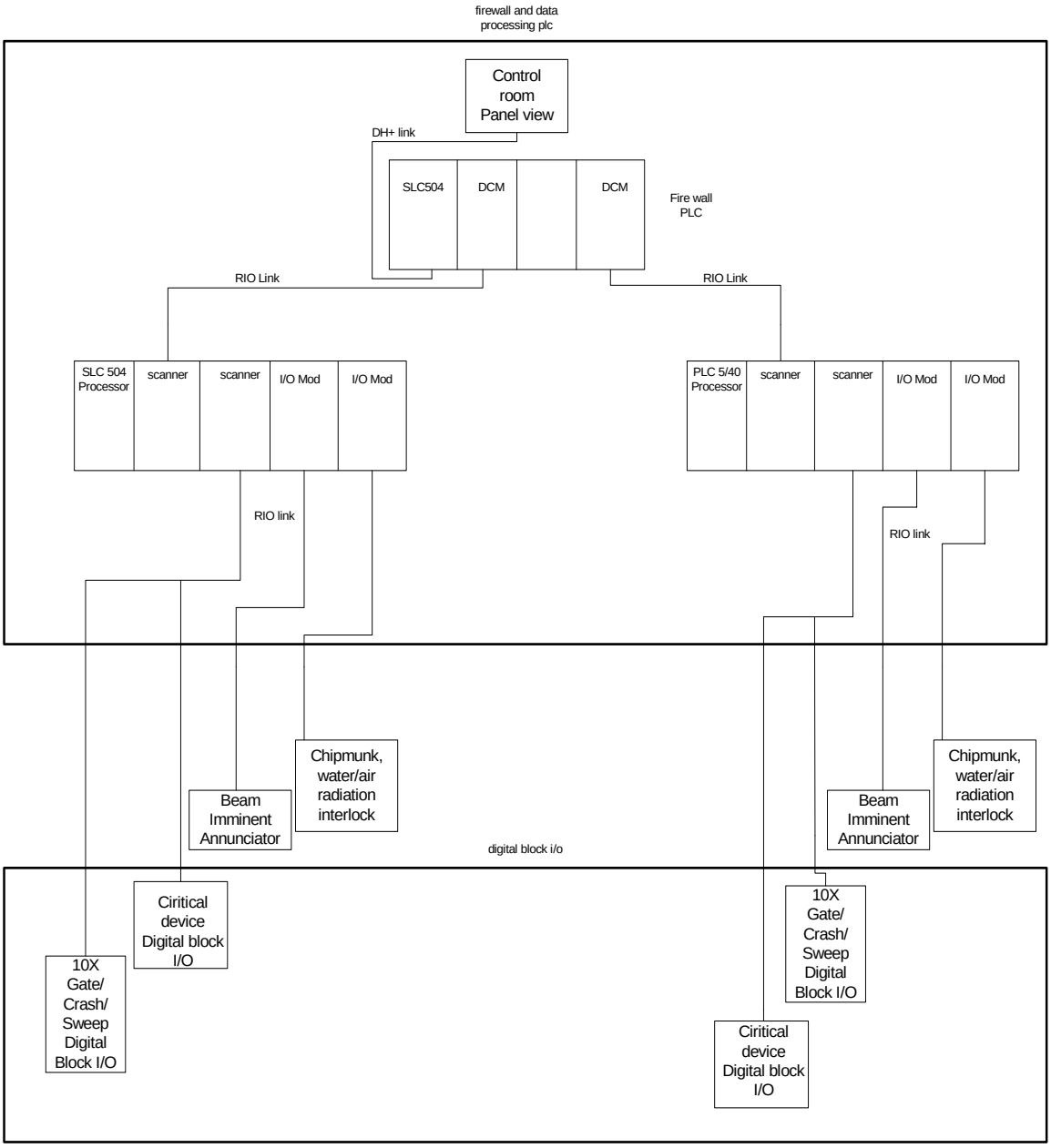

Figure 1.

Hazard Rating and Follow-up Assignments for Safety Systems (Jonathan Reich)

Explanation of Hazard Rating

- 0 indicates an operation with minimal risk
- 1 indicates an operation with low initial risk
- 2 indicates an operation with moderate initial risk
- 3 indicates an operation with a high initial risk

Because of the hazards identified, this operation has the potential of being an operation with a moderate initial risk.

The following questions were answered YES and is considered a hazard rating of 2:

6d. Has this equipment been built locally, modified or NOT listed by a Nationally Recognized Testing Laboratory?
11b. Will operation require work outside normal working hours?
13. Are there any controls (i.e., ventilation, fume hoods, interlocks, personal protective equipment, HEPA filters/vacuum cleaners, medical monitoring) associated with this operation?
13b. Are interlocks used in this operation?

The following question was answered YES and is considered a hazard rating of 1:

11. Will this operation require trained operators or close surveillance?

Follow-up Assignment (Jonathan Reich)

(6d) The Chief Electrical Engineer must certify devices that are not commercially available. Contact Jon Sandberg (x4682).

(11, 11b) Ensure the operation of the ERL access control system is incorporated into the C-AD Operations Procedure Manual, Chapter 4. Contact Asher Etkin for review of testing procedures (x4006).

(13, 13b) The Radiation Safety Committee must approve interlock logic and documentation. Contact Dana Beavis, RSC Chair, x7124.

2.14 Cryomodule and e-Gun Installation (Gary McIntyre)

This activity concerns the assembly and testing associated with the assembly of the ERL 5-cell Cavity cryomodule and the ERL electron gun. In each case, each device will be received as a string under vacuum. The strings will contain the cavities with other components attached to them (e.g., ferrite absorbers, beam tube thermal transitions, beam tube diameter transitions). The strings will be thermally insulated, magnetically and thermally shielded and installed into their respective vacuum vessels (a.k.a. cryomodules). The 5-cell string will be supported by stands while being worked on. The 5-cell stand will run directly from the string assembly, cavity or space frame, to the ground.

The e-Gun string, suspended by Nitronic rods from its cryomodule top plate, will be supported from the top by a support structure. Then, using the 25-ton crane in the NEEBA area, the insulated and shielded strings will be craned in their respective prepared vacuum vessel lower shell. The cryomodule installation will be complete as the last layers of insulation and magnetic shielding are applied.

The assembly will be welded on and piping and vacuum systems will be pressurized and vacuum leak checked through out the assembly process.

Hazard Rating and Follow-up Assignments for Cryomodule and e-Gun Installation Systems (Gary McIntyre)

Explanation of Hazard Rating

- 0 indicates an operation with minimal risk
- 1 indicates an operation with low initial risk
- 2 indicates an operation with moderate initial risk
- 3 indicates an operation with a high initial risk

Because of the hazards identified, this operation has the potential of being an operation with a moderate initial risk.

The following questions were answered YES and is considered a hazard rating of 2:

7c. Are there any structures supporting heavy loads?
12b. Does this operation generate, store or use any combustible materials in significant quantities?
13c. Is any personal protective equipment used in this operation?

The following questions were answered YES and is considered a hazard rating of 1:

4c. Is any waste generated from this operation?
7b. Does the operation include the use of hoist, crane, forklift, or rigging?
7f. Will this operation require any elevated work?
7l. Does the operation include the use of typical shop equipment?

10. Does this operation involve: the use of equipment, tools or materials outside of the design specifications or outside of the manufacturer's recommendations OR the use of equipment or apparatus not commercially available?
11c. Will this operation require the 2-person rule?

Follow-up Assignment (Gary McIntyre)

(4c) Waste generators must have proper training. Contact Joel Scott (x7520), Environmental Coordinator, for more information.

(7b) Before using hoist, cranes or rigging equipment, ensure that current, valid annual inspection tags are attached. You need to ensure you add your equipment to the C-AD annual request for these services, notify Joel Scott (x7520).

(7b) Forklifts, powered trucks, platform lift trucks and motorized hand trucks require special training prior to use and require completion of a pre-use inspection. Contact the Training Manager, John Maraviglia (x7343), to ensure all personnel are assigned the correct training requirements.

(7c) Any structures supporting heavy loads or structural changes to cranes or buildings requires review by the Plant Engineering Division and the Chief Mechanical Engineer. Contact Joe Tuozzolo (x3966) for a review.

(7f) Elevated work may require fall protection and/or a fall protection plan. Consult with Peter Cirnigliaro (x5636).

(7l) Electrically powered hand tools should be double insulated and plugged into grounded system.

(10) Please list the equipment that you are using outside of design specifications or manufacturer recommendations and/or locally built equipment in your analysis along with associated controls. Certification by the Chief Electrical and/or Chief Mechanical Engineer may be required. Contact Jon Sandberg (x4682) for electrical device review and Joe Tuozzolo (x3966) for mechanical device review.

(12b) The Fire Protection Engineer must approve generation, storage or use of combustible materials in significant quantities; in addition, nearby ignition sources must be reviewed. Contact Michael Kretschmann (x5274).

(13c) All PPE requirements must be listed in your analysis. Special care must be given when selecting gloves. Always seek manufacture specific information on the gloves being used or contact the ESH Coordinator, Asher Etkin (x4006) for guidance.

2.15 Authorization (E. Lessard)

The hazards and controls for ERL Prototype subsystems must be written and addressed in a Safety Assessment Document similar to the C-AD SAD. The SAD must be reviewed by the Laboratory ESH Committee, and approved by the BNL Deputy Director for Operations. Responsible person is E. Lessard.

ERL Prototype commissioning and operations must be approved by DOE. DOE is responsible for approving an Accelerator Safety Envelop and for authorizing commissioning and operations of this prototype accelerator. Prior to requesting permission to commission and/or operate the ERL, BNL must perform an Accelerator Readiness Review, as per the SBMS Subject Area, Accelerator Safety. The responsible person for preparing authorization documents and requesting a Accelerator Readiness Review is E. Lessard.

Appendix 1: Questions Used in the Collider-Accelerator Department's Hazard Identification Tool

1. Are there any chemicals, toxic materials or hazardous material handled, generated, used, or stored in this operation, including oils and solvents?

1a. Does this operation use or transport any chemicals with a Threshold Limit Value, or chemical that is regulated by OSHA?

1b. Are any chemicals or chemical wastes used, stored or generated in this operation either known or suspected human carcinogen?

1c Does this operation involve the use, storage or generation of peroxide forming chemicals, shock sensitive chemicals or picric acid?

1d. Does this operation use, generate or store flammable or combustible gases, liquids or solids, including solvents?

1d (1). Does this operation involve the use of hydrogen gas?

1e. Does this operation involve the use, storage or generation of caustic/corrosive chemicals or wastes?

1f. Will this operation involve the use of beryllium - other than articles made of beryllium or that contain beryllium?

1g. Will this operation involve more than 30 minutes handling time with lead? Will this operation involve use of heavy metals such as mercury, silver or cadmium?

1i. Does this operation involve the use or transportation of explosives or explosive wastes?

2. Are there any accelerators or other radiation generating devices involved in this operation (other than the Collider-Accelerator)?

2a. Is there an accelerator used in this operation?

2a (1). Does this operation use accelerators that are built locally or are commercially available units that have been modified?

2b. Are there any radiation generating devices (RGD) used in this operation?

2b(1). Are radiation generating devices capable of creating a High Radiation Area (>100 mrem/hr at 30 centimeters)?

2b(2). Are the radiation generating devices capable of creating a radiation area?

2c. Does the radiation generating device only produce radiation incidental to its primary function (such as electron microscopes, electron beam welders, ion implantation equipment)?

2c(1). Does this operation use RGDs that are built locally or are commercially available units

that have been modified?

2d. Is the radiation generating device an intentional x-ray generating device which produces radiation as part of the primary function (i.e. x-ray diffractometers, x-ray machines)?

2d (1). Is the device built locally or been modified OR is it being used outside design specifications?

3. Are radioactive materials (including sealed sources and wastes) generated, handled, processed, used or stored?

3a. Does this operation involve handling of radioactive materials or sources?

3b. Does this operation involve radionuclides listed in the Radionuclide Threshold Table in amounts that exceed 10% of the quantity listed?

3c. Is dispersible radioactive material being used in this operation?

3d. Will any radioactive material/waste be transported as a result of this operation?

3e. Does this operation involve any accountable sources? (Sealed Radioactive Source Accountability Table)

3f. Any radioactive material being left or stored at Collider-Accelerator facilities?

4. Are there any possible environmental impacts with this operation?

4a. Are there any non-radioactive emissions or effluents from this operation?

4b. Are there any radioactive emissions or effluents from this operation?

4c. Is any waste generated from this operation?

4c(1). Is the waste radioactive?

4c(2). Is the waste hazardous?

4c(3). Is the waste mixed waste?

4d. Are any hazardous materials (such as lead, mercury or beryllium) being left or stored at Collider-Accelerator facilities?

4e. Does this operation require any new above or under ground storage tanks?

4f. Does this operation use ozone depleting substances?

4g. Are any changes required to the Environmental Management System (as determined by the Environmental Compliance Rep)?

4h. Is this work being done within 1/2 mile of the Peconic River?

5. Does this operation involve the use of lasers?

5a. Do personnel use or have the potential to be exposed to Class IV lasers?

5b. Do personnel use or have the potential to be exposed to Class IIIb lasers?

5c. Does the operation involve Class I, II or IIIa lasers?

5d. Does this operation involve Class I lasers with embedded IIIb or IV lasers?

5e. Have any of the lasers involved in this operation been built locally or have any commercially available lasers been modified?

5f. Is the laser registered at BNL with the Laser Safety Officer?

6. Is any energized electrical equipment used in this operation?

6a. Is there any exposed electrical components where there is the potential for personnel to be exposed to voltages greater then 50V (Range A)?

6b. Is it required for personnel to work on energized systems greater than 50 V (Range A) but less than 600 V (Range B&C)?

6c. Is it required for personnel to work on energized systems greater than 600 V (Range D)?

6d. Has this equipment been built locally, modified or NOT listed by a Nationally Recognized Testing Laboratory?

6e. Does your operation require the development of an Electrical Working On or Near Energized Conductors Permit?

6f. Are emergency shut-off controls provided for shutting down electrical power?

6g. Is required fusing provided for all relevant equipment?

7. Are there any mechanical hazards or work hazards such as material handling, elevated work, vacuum or pressure vessels, scaffolds, stored energy or structural considerations?

7a. Are there any material handling devices including all large moving equipment?

7b. Does the operation include the use of a hoist, crane, forklift, or rigging?

7c. Are there any structures supporting heavy loads?

7d. Does this operation require a structural change to any crane or building?

7e. Will you be purchasing any ladders or scaffolds?

7f. Will this operation require any elevated work?

7g. Does work require fall protection equipment (i.e. harness, lanyard)?

7h. Does the operation include the use of hydraulic or pneumatic lift?

7i. Does any equipment operate at pressures above 15 psig or under a vacuum?

7j. Does this system have any vacuum windows?

7k. Is any part of this system/operation involve a cryogenic system or dewar installation?

7l. Does the operation include the use of typical shop equipment?

7m. Are there any sources of stored energy (hydraulic, pneumatic, thermal, mechanical)?

7m1. Is the source capable of being easily isolated or can it be LOTO'd?

7m2. Is disassembly required to isolate energy (i.e. inserting blank flange)?

8. Does this operation require work with or generate any of the following physical hazards--confined spaces, RF or microwave radiation, magnetic fields, hot or cold surfaces, high noise levels, or oxygen deficiency?

8a. Does this operation create any space that might meet the definition of a confined space?

8b. Is it required for personnel to enter any Class 1 Confined Spaces?

8c. Is it required for personnel to enter any Class 2A or 2B Confined Spaces?

8d. Is it required for personnel to enter any Class 2C Confined Spaces?

8e. Is there any radiofrequency or microwave field generated by a source greater than 7W in a space that might be occupied?

8f. Does this equipment/operation produce any magnetic fields greater than 4 Gauss?

8g. Is it required for any personnel to be exposed to a magnetic field greater than 600 Gauss?

8h. Are there any surface temperatures less than 0 deg F or greater than 150 deg F?

8i. Does this operation generate any equipment which could operate at greater than 80 dbA?

8j. Is it required for personnel to work in an area with a Noise Level between 85-100 dBA?

8k. Is it required for personnel to work in an area with a Noise Level above 100 dBA?

8l. Is there any possibility of creating an Oxygen Deficient Atmosphere?

8m. Is it required for any personnel to work in an existing Oxygen Deficiency Hazard Area?

9. Are there any additional hazards, not mentioned above, that should be considered? Such as biological hazards, ergonomics or heat stress?

9a. Could a worker be exposed to any biological hazard including handling of human body fluids, human tissues, or mouse droppings?

9b. Will personnel perform functions that involve repetitive motion, excessive force or

vibration, lifting, or other ergonomic concerns?

9c. Will personnel be required to perform this operation in extreme climates or temperatures?

10. Does this operation involve the use of equipment, tools or materials outside of the design specifications or outside of the manufacturer's recommendations OR the use of equipment or apparatus not commercially available?

10a. Has this equipment received review by the C-A Chief Mechanical Engineer and/or Chief Electrical Engineer?

10b. Was this equipment built at a University or Laboratory in another country?

11. Will this operation require trained operators or close surveillance?

11a. Will this operation be left unattended?

11b. Will operation require work outside normal working hours?

11c. Will this operation require 2-person rule?

11d. Will this operation require special attention in the event it is left unexpectedly for long periods of time?

11e. Will this operation require an emergency procedure due to unusual or complicated shutdown instructions?

11f. Will group operational procedures be required for normal operation of this equipment?

11g. Is there a list of designated and trained personnel for this equipment/operation?

11h. During construction, use, or storage of spare parts and materials, are valuable materials attractive for theft and worth more than $1000 (e.g. precious metals; or copper, platinum, tungsten, stainless, aluminum) involved with this project?

12. Are there any fire protection or life safety concerns in this operation?

12a. Will welding or cutting or spark/flame producing operations be conducted in association with this operation?

12b. Does this operation generate, store or use any combustible materials in significant quantities?

12c. Will this operation require a deviation from the Life Safety Code (consider changes in exits, change in occupancy?

12d. Will this operation change the risk level of fire protection?

12e. Could this equipment act as an ignition source?

13. Are there any engineering controls or Personal Protective Equipment (PPE) required (i.e., ventilation, fume hoods, interlocks, HEPA filters/vacuum cleaners, respirators)?

13a. Is any local ventilation used in this operation?

13b. Are interlocks used in this operation?

13c. Is any personal protective equipment used in this operation?

13c(1) Are gloves used in this operation?

13d. Are HEPA filters in place/used?

13d(1). On ventilation systems?

13d(2). HEPA vacuum cleaners?

13e. Will respiratory protection be required for this operation?

14. Do you rely on any facility utilities (listed as sub questions) to provide safety controls for your operations?

14a. Compressed Air

14b. Compressed Gas

14c. Chilled Water

14d. De-Ionized/De-mineralized Water

14e. Electric Power (includes Grounding and UPS)

14f. Emergency electrical power

14g. Fire Protection

14h. Hoists and Cranes

14i. Heating Water

14j. Non-potable Water

14k. Oxygen Monitoring System

14l. Public Address

14m. Potable Water

14n. Process Cooling Water

14o. Sanitary Sewer

14p. Steam

14q. Utility Gas (natural gas)

14r. Vacuum

14s. Ventilation Supply/Exhaust

15. Are you aware of any other hazardous conditions or potential sources of hazards that have not previously been addressed by these questions that you feel deserve further consideration?

BNL - 420

Department of Energy
Brookhaven Area Office
P.O. Box 5000
Upton, New York 11973

NOV 08 2001

Ms Loretta Cunniff
Brookhaven Science Associates, LLC
Brookhaven National Laboratory
Upton, New York 11973

Dear Ms Cunniff:

SUBJECT: NEPA DETERMINATIONS

We have reviewed the Environmental Evaluation Notification Form for the following activity:

- Prototype Electron Cooling Device

and have determined it to be a Categorical Exclusion. A copy of the determination is enclosed.

If you should have any questions regarding this matter, please contact Caroline Polanish of my staff at extension 5224.

Sincerely,

M. Holland

Michael D. Holland
Area Manager

Enclosure:
As stated

cc: J. R. Oprzedek, TS, CH, w/encl.
C. Polanish, BAO, w/encl.
M. Davis, BNL, w/encl.

National Environmental Policy Act (NEPA) ENVIRONMENTAL EVALUATION NOTIFICATION FORM

Grantee/Contractor Laboratory: BROOKHAVEN NATIONAL LABORATORY

Project/Activity Title: Prototype Electron Cooling Device

CH NEPA Tracking No.: BNL-420 Type of Funding: Nuclear Physics

B&R Code: Total Estimated Cost: $10 M

DOE Cognizant Secretarial Officer (CSO): James Decker, Acting SC-1

Contractor Project Manager: I. Ben-Zvi Signature: Ilan Ben-Zvi

Date: 10-18-2001

Contractor NEPA Reviewer: M. Davis Signature: Mark C. Davis

Date: 10/22/01

I. Description of Proposed Action:

The proposed action would install a prototype electron accelerator system in the experimental hall of Building 939. The proposed electron accelerator would consist of photocathode RF electron guns ("Photoinjectors"), a laser system to drive the photocathode, a superconducting linac section, electron beam transport consisting of an evacuated tube and various magnets and a beam-dump. Two photoinjectors would be planned. A superconducting photoinjector would generate an electron beam of about 1 mA current at an energy of about 2 MeV. A copper photoinjector would generate an electron beam of about 100 mA up to 4 MeV energy. The superconducting linac energy would reach up to 50 MeV. Energy recovery of the linac would be used, so that the electrons would be dumped at the photoinjector energy.

The copper photoinjector would require a large amount of RF power, about 1 MW, and a water-cooling system, including cooling tower, associated with this system. Cooling-tower water would be treated either with ozone or with biocides and rust inhibitors. Effluent from the cooling tower would be routed either to the existing storm drain system, or to the recently (2001) excavated recharge basin north of buildings 902 and 905.

The machine cooling system would be a closed loop deionized water system using ion exchange beds that would be removed for regeneration or disposal by a contractor off site. In no case would the electron beam strike the water directly, so water activation could only occur due to bremsstrahlung produced when electrons strike the accelerating structure or the beam pipe. At the proposed beam current and energy, no induced activity in water would be expected. Discharge of contaminants to the ground or to the sanitary system would be neither planned nor expected from the accelerator cooling system. The closed loop cooling system would be connected to the cooling tower via a heat exchanger.

The photocathode laser would be a class 4 laser, running mode-locked CW operation in a wavelength of about 1 micron with harmonic generation to 0.5 micron.

The proposed facility would be located in the (30 x 80 ft) experimental hall of the existing building (Building 939). Additional areas within Building 939 would be

used for support systems such as electronic racks, controls, water treatment systems, etc. There are no new building construction actions other than the cooling tower. Services such as water, power, telephone, fire alarm, etc., come from existing utility systems. The existing radiation shielding around Building 939 (concrete and sand) would continue to be utilized for the proposed action. The tunnels leading into the Building 939 experimental hall area would not be utilized by this project. Access controls, such as gates, etc. would be used to prevent unauthorized access.

Acceleration of electrons at the proposed energy levels would result in low levels of activation at beam stops and equipment. At these electron energy levels, the generation of tritium would be expected to be at level below monitoring and regulatory measures. A sampling program would be established to confirm anticipated levels.

II. Description of Affected Environment:

The affected area would include the existing Building 939 and the immediate surrounding areas necessary for cooling tower placement and piping routes. No impacts to environmentally sensitive areas would be anticipated.

III. Potential Environmental Effects: (Attach explanation for each "yes" response and "no" response if additional information is available and could be significant in the decision making process.)

A. Sensitive Resources: Will the proposed action result in changes and/or disturbances to any of the following resources?

		Yes/No
1.	Threatened/Endangered Species and/or Critical Habitats	No
2.	Other Protected Species (e.g., Burros, Migratory Birds)	No
3.	Wetlands	No
4.	Archaeological/Historic Resources	No
5.	Prime, Unique or Important Farmland	No
6.	Non-Attainment Areas	No
7.	Class I Air Quality Control Region	No
8.	Special Sources of Groundwater (e.g., Sole Source Aquifer)	Yes
9.	Navigable Air Space	No
10.	Coastal Zones (e.g., National Forests, Parks, Trails)	No
11.	Areas w/Special National Designation (e.g., National Forests, Parks, Trails)	No
12.	Floodplain	No

B. Regulated Substances/Activities: Will the proposed action involve any of the following regulated substances or activities?

		Yes/No
13.	Clearing or Excavation (indicate if greater than 5 acres)	Yes
14.	Dredge or Fill (under Clean Water Act section 404; indicate if greater than 10 acres)	No
15.	Noise (in excess of regulations)	No
16.	Asbestos Removal	No
17.	PCBs	No
18.	Import, Manufacture or Processing of Toxic Substances	No
19.	Chemical Storage/Use	Yes
20.	Pesticide Use	No
21.	Hazardous, Toxic, or Criteria Pollutant Air Emissions	No
22.	Liquid Effluent	Yes
23.	Underground Injection	No
24.	Hazardous Waste	Yes
25.	Underground Storage Tanks	No
26.	Radioactive (AEA) Mixed Waste	No
27.	Radioactive Waste	Yes
28.	Radiation Exposures	Yes

C. Other Relevant Disclosures. Will the proposed action involve the following?

		Yes/No
29.	A threatened violation of ES&H regulations/permit requirements	No
30.	Siting/Construction/Major Modification of Waste Recovery or TSD Facilities	No
31.	Disturbance of Pre-existing Contamination	No
32.	New or Modified Federal/State Permits	Yes
33.	Public controversy (e.g., Environmental Justice Executive Order 12898 consideration and other related public issues)	No
34.	Action/involvement of Another Federal Agency (e.g., license, funding, approval)	No
35.	Action of a State Agency in a State with NEPA-type law. (Does the State Environmental Quality Review Act Apply?)	No
36.	Public Utilities/Services	No
37.	Depletion of a Non-Renewable Resource	No

IV. **Section D Determination**: Is the project/activity appropriate for a determination by the Area Manager under Subpart D of the DOE NEPA Regulations for compliance with NEPA?

Yes

Indicate the recommendation and specific class of action from Appendix A-D to Subpart D (10 CFR 1021):

CX

B3.10 Siting/construction/operation/decommissioning of particle accelerators, including electron beam accelerators, primary beam energy less than approximately 100 MeV

DOE Recommendation:

BAO NEPA Coordinator: Caroline Polanish Signature: Caroline Polanish

Date: 11/05/01

LGL-GL: Irene P. Atney Signature: Irene P. Atney

Date: 11/7/01

Group Manager Subpart D CX Determination and Approval:

The preceding pages are a record of documentation required under DOE Final NEPA Regulation, 10 CFR Part 1021.400, to establish that an action may be categorically excluded from further NEPA review. I have determined that the proposed action meets the requirements for the Categorical Exclusion referenced above. Therefore, by my signature below, I have determined that the proposed action may be categorically excluded from further NEPA review and documentation.

BAO Area Manager: Michael D. Holland Signature: M. Holland

Date: 11/7/01

V. Additional Information

A8 Although BNL is situated over a Sole Source Aquifer, operation of this accelerator facility should not affect the aquifer. This would include discharges to the BNL sanitary and storm water systems. The BNL Standards Based Management System Subject Area "Liquid Effluents" provides requirements related to discharges. Work planning, experimental review, and Tier I safety inspections are the three methods for ensuring that hazardous effluents do not make their way into the sanitary waste stream or storm water discharges.

B13 Excavation would be required to install new piping associated with cooling tower discharge water. Excavation would be limited to the area immediately adjacent the piping route. While the excavation area will be less than 5 acres, standard construction techniques, such as silt-fences and/or straw-bales, would be used to control runoff during excavation. Excavated areas associated with the piping would be backfilled and returned to grade.

B19 Routine operation and maintenance actions associated with the accelerator facility would involve the use of chemicals or compounds, generally in small quantities. BNL's Chemical Management System would track the quantity, location, owner, and storage of any chemical inventory.

B22 Any discharges associated with the proposed action, including cooling tower effluent, would be managed according to the BNL Standards Based Management System Subject Area "Liquid Effluents".

B24 Routine operation and maintenance actions associated with the accelerator facility would result in a small amount of hazardous wastes being generated, primarily cleaning compounds. The total volume generated would not be expected to exceed a few cubic feet per year and would not constitute a significant increase to Collider-Accelerator Department total estimates. All hazardous wastes would be managed in accordance with established BNL procedures and subject areas. Work planning, experimental review, and Tier I safety inspections are the three methods for ensuring wastes are minimized and controlled.

B27 Routine operation and maintenance actions associated with the accelerator facility would result in a small amount of radioactive waste being generated. The total volume generated would not be expected to exceed a few cubic feet per year and would not constitute a significant increase to Collider-Accelerator Department total estimates. All radioactive wastes would be managed in accordance with established BNL procedures and subject areas. Work planning, experimental review, and Tier I safety inspections are the three methods for ensuring wastes are minimized and controlled.

B28 Routine operation and maintenance actions associated with the accelerator facility would result in low-level radiation exposures to workers. Interlocks, access controls, training and procedure administration would be used to minimize exposures and employ ALARA principles.

C32 Depending on the disposition of cooling tower discharge, the existing New York State Pollutant Discharge Elimination System (SPDES) permit would be revised as necessary. The machine cooling system would be a closed loop deionized water system using ion exchange beds that would be removed for regeneration or disposal by a contractor off site. In no case would the electron beam strike the water directly, so water activation could only occur due to bremsstrahlung produced when electrons strike the accelerating structure or the beam pipe. At the proposed beam current and energy, no induced activity would be expected. Discharge of contaminants to the ground or to the sanitary system would be neither planned nor expected from the accelerator cooling system. The closed loop cooling system would be connected to the cooling tower

via a heat exchanger. Cooling-tower water would be treated either with ozone or with biocides and rust inhibitors, and would meet all SPDES effluent limits.

Environmental & Waste ManagementServices Division

Building 120
P.O. Box 5000
Upton, NY 11973-5000
Phone 631 344-2165
Fax 631 344-5812
mdavis@bnl.gov

BROOKHAVEN
NATIONAL LABORATORY

managed by Brookhaven Science Associates
for the U.S. Department of Energy

Memo

Date: December 23, 2003

To: E. Lessard

From: M. Davis, NEPA/NHPA Coordinator

Subject: Evaluation of Scope Change to BNL-420 "Prototype Electron Cooling Device"

I have reviewed the revised information for the original proposed action identified below to determine if the scope has changed sufficiently as to require a separate NEPA review.

- BNL-420 "Prototype Electron Cooling Device", determined to be categorically excluded by DOE-BAO on 11/7/01

The planned project revisions are identified below:

Installation in a different building: Originally – Building 939; Revised – Building 912, NEBA experimental area, within a concrete blockhouse erected from existing shielding.

Electron beam parameters (overall energy levels are the same, but parameters have been varied): Originally – superconducting photoinjector electron beam = 1 mA current at an energy of 2 MeV; Revised = 0.5 A current at 2 MeV.

Originally - cooper photoinjector electron beam = 100 mA up to 4 MeV energy;
Revised cooper electron beam = 500 mA up to 1.5 MeV or 100 mA at 2.5 MeV.

Cooling water system: Originally – Newly constructed cooling tower (including excavation for piping); Revised – Use existing cooling tower(s), and no excavation or SPDES permit revisions.

The environmental aspects remain the essentially same as described in the initial NEPA EENF. There would be no excavation work or SPDES permit revisions in the revised plan. Therefore, these revisions are determined to be within the scope of the original project NEPA categorical exclusion. This review has been coordinated with C. Polanish, NEPA Coordinator for the DOE Brookhaven Area Office. If you have questions about this review please do not hesitate to contact me at extension 2165.

cc: C. Polanish

Email copies: G Goode, T. Green, R. Lee, M. Van Essendelft, J. Selva

ESD-EC51ER.03

Prototype Energy Recovery Linac, Building 912

Safety Assessment Document

June 30, 2008

Contributors:

D. Beavis
I. Ben-Zvi
A. Burrill
R. Karol
D. Lederle
E. Lessard
V. Litvinenko
G. Mahler
M. Mapes
G. McIntyre
B. Oerter
D. Phillips
V. Ptitsyn
T. Rao
J. Reich
J. Scaduto
Y. Than
K. Yip
A. Zaltsman

Approval Signatures

E. Lessard, Collider-Accelerator Department Associate Chair for ESSHQ

I. Ben-Zvi, Collider-Accelerator Department Associate Chair for Superconducting Accelerator R&D

D. Lowenstein, Collider-Accelerator Department Chair

S. Vigdor, BNL Associate Laboratory Director, Nuclear and Particle Physics

M. Bebon, Deputy Laboratory Director for Operations

Table of Contents Links

1. Introduction 10

1.1. Scope 10

1.2. Basic Understanding of Prototype ERL Activities 10

1.3. Intentionally-Designed Protection Afforded the Public, Workers and Environment 20

1.4. Codes of Record 21

2. Summary/Conclusions 24

2.1. Results and Conclusions of the Analyses Provided In the SAD 24

2.2. Comprehensiveness of the Safety Analysis and Appropriateness of the ASE 25

2.3. Appropriateness of the Accelerator Safety Envelope 26

3. Site, Facility and Operations Description 27

3.1. Environment Within Which the Prototype ERL is Constructed 27

3.2. Prototype ERL Characteristics Related To Safety 27

3.3. Management Methods Used In Operating the Prototype ERL Accelerator Facility 28

3.4. Design Criteria and As-Built Characteristics of Protoype ERL, Supporting Systems and Components with Safety-Related Functions 35

3.5. Design Features That Exclude or Minimize Exposure to Hazards to As Low As Reasonably Achievable (ALARA) During Operation, Maintenance and Facility Modification 49

3.6. BNL, C-AD and Prototype ERL Organizational Structure 53

3.7. Administrative Controls for Routine Operation and Emergency Conditions..... 54

3.8. Critical Operational Procedures to Prevent or Mitigate Accidents..... 56

3.8.1. Emergency Preparedness 57

3.8.2. Configuration Control..... 57

3.9. Administrative Controls..... 57

3.10. Calibration and Testing..... 57

3.11. Radiological, Worker Safety and Environmental Programs..... 58

3.11.1. Examples of Pollution Prevention and Safety Improvement..... 61

3.12. Records Management 61

3.13. Tests to be Conducted at Prototype ERL..... 63

3.14. Test Equipment Design Criteria and Components Having Safety Functions..... 64

4. Safety Analysis 75

4.1. Identification of Potentially Hazardous Conditions from Radiation Associated With Operation 76

4.1.1. Unshielded Source Radiation Levels..... 81

4.1.2. Maximum Credible Dose Rates on Outside Surface of 48-Inch Concrete Shield..... 84

4.1.3. Maximum Credible Ozone Concentrations in the Prototype ERL Cave 94

4.2. Identification of Potentially Hazardous Conditions from Oxygen Deficiency..... 96

4.3. Identification of Potentially Hazardous Conditions from Electrical Energy..... 100

4.4. Fire Hazards 102

4.5. Industrial Hazards 103

4.6. Hazard Controls 103

4.6.1. Radiation Hazard Controls 104

4.6.1.1. Permanent Shielding and ALARA Dose 105

4.6.1.2. Radiation Detection and Radiation Interlocks 107

4.6.1.3. Control of Radioactive Materials and Sources 109

4.6.1.4. Portable Radiation Monitors 110

4.6.1.5. Personnel Dosimetry 110

4.6.1.6. Access Controls Systems 111

4.6.2. Control and Use of Hazardous Materials 113

4.6.3. Electrical Safety 114

4.6.4. Lockout/Tagout Program 115

4.6.5. Safety Reviews and Committees 115

4.6.6. Training 115

4.6.7. Personal Protective Equipment 116

4.6.8. Significant Environmental Aspects and Impacts 117

4.6.9. Hazard Reduction Associated with Waste Generation and Handling 119

4.6.10. Fire Detection, Egress, Suppression and Response 120

4.6.11. Routine Credible Failures 121

4.7. Evaluation of Potential Impacts to Workers, Public and Environment 122

4.8. Selection of Control Measures that Reduce Risks to Acceptable Levels 123

4.9. Listing of All Credited Engineered and Administrative Controls 124

4.10. Description of the Maximum Credible Incident 125

4.10.1. Maximum Credible Fire Incident 125

4.10.2. Maximum Credible Electrical Accident 128

4.10.3. Risk Assessment to Workers, the Public and the Environment 129

4.10.3.1. Radiation Risks 129

4.10.3.2. Environmental Risks from Radiation 130

4.10.3.3. Fire Risks 130

4.10.3.4. Electrical Risks 131

4.10.4. Professional Judgment Issues 131

4.10.5. Methods Used in Evaluation of Radiological Hazards 132

5. Basis for Accelerator Safety Envelope 133

5.1. Connection between Engineered and Administrative Bounding Conditions and ASE ... 136

5.2. ASE Consideration for Routine and Non-Routine Operating Conditions 138

6. Quality Assurance 139

6.1. The Ten Management, Performance and Assessment Criteria of DOE O 414.1C 139

6.2. Quality Assurance (QA) Program at Prototype ERL 139

6.3. QA Activities That Impact Protection of Worker, Public or Environment 141

6.3.1. Personnel Training and Qualifications 141

6.3.2. Quality Improvement 142

6.3.3. Documents and Records 143

6.3.4. Work Process 144

6.4. QA Activities That Impact Accelerator Maintenance and Operations 145

6.4.1. Design 145

6.4.2. Procurement 146

6.4.3. Inspection and Acceptance Testing 147

6.5. Management Assessment 148

6.6. Independent Assessment 149

7. Post-Operations Planning 151

7.1. Structural and Internal Features that Facilitate Future Decommissioning/Dismantling.. 151

7.2. Operations Considerations to Minimize the Generation of Radiological and/or Hazardous Materials 152

7.3. Long-Term Records Management to Facilitate Post-Operations Activities 154

7.4. Waste Management of Radiological and Hazardous Material Generation During Post Operations Period 155

8. References/Glossary/Acronyms 156

8.1. List of Documents that Provided Supporting Information for the SAD 156

8.1.1. Accelerator Safety Implementation Guide for DOE O 420.2, Safety Of Accelerator Facilities, Office of Science, Department of Energy, May 1999. 156

8.1.2. Accelerator Safety Subject Area 156

8.1.3. C-AD Conduct of Operations Matrix 156

8.1.4. C-AD Fire Hazards Analyses 156

8.1.5. OPM for C-AD 156

8.1.6. Radiological Control Manual..... 156

8.2. List of Acronyms 156

Appendix Links

Appendix 1, Shielding Analyses - 162

Appendix 2, ODH Calculations - 190

Appendix 3, C-AD Shielding Policy - 199

Appendix 4, Accelerator Safety Envelope -201

Appendix 5, Fault Study Results - 208

Appendix 6, Qualitative Risk Assessments - 209

Appendix 7, Cooling Water Activation - 222

Appendix 8 Air Activation - 225

Figure Links

Figure 1.2.a Prototype ERL General Layout Inside Building 912 11

Figure 1.2.b Drawing of Prototype ERL in Building 912..... 12

Figure 1.2.c Drawing of Prototype ERL Enclosure and Ring 13

Figure 1.2.d Drawing of Prototype ERL Laser, Klystron and Power Supply Rooms 14

Figure 1.2.e Drawing of Prototype ERL Control Area and Nitrogen Storage Tank 15

Figure 1.2.f Drawing of Prototype ERL Second Floor Level..... 16

Figure 1.2.g Drawing of Prototype ERL Cooling Water Skid and Cryogenic Helium Recovery Areas 17

Figure 1.2.h Drawing of Prototype ERL Helium Compressor Room..... 18

Figure 3.3.a Operations Programs for ESSHQ at C-AD 32

Figure 3.6 Prototype ERL Operations Organization..... 54

Figure 3.14.1.a Prototype ERL Fire Protection System..... 70

Figure 3.14.1.b Prototype ERL Klystron Lead Shield Layout 73

Figure 3.14.1.c Prototype ERL General Shield Layout 74

Figure 7.2 Prototype ERL Cooling Water Process Flow Diagram..... 153

Table Links

Table 3.4 Estimated Prototype ERL Cooling Water Heat Loads, Temperatures, Pressures - 48

Table 4.1 Parameters of the Prototype ERL in Building 912 - 80

Table 4.1.2.a Dose Outside of Prototype ERL Cave for 3.5 and 25 MeV Electrons - 86

Table 4.1.2.b Skyshine Dose Rate Estimates from 25 MeV Beam Loss - 88

Table 4.1.2.c Estimated Maximum Dose Rates and Fault Dose to Worker Near Penetrations - 93

Table 4.2 Potential ODH Areas at ERL - 99

Table 4.9.a Summary of Credited Engineered Controls - 124

Table 4.9.b Summary of Credited Administrative Controls - 125

1. Introduction

1.1. Scope

This document presents a basic understanding of the mission associated with the Prototype Energy Recovery Linac (ERL) in Building 912, the protections that are afforded the public and the workers' health and safety, and the protection of the environment from radiological hazards associated with electrons.

1.2. Basic Understanding of Prototype ERL Activities

The mission associated with the Prototype ERL in Building 912 is to study the requirements for an electron accelerator that may later be used to increase the performance of the Relativistic Heavy Ion Collider (RHIC). Figures 1.2.a through 1.2.h show the general layout and the plan views of functional areas at the Prototype ERL.

Figure 1.2.a Prototype ERL General Layout Inside Building 912

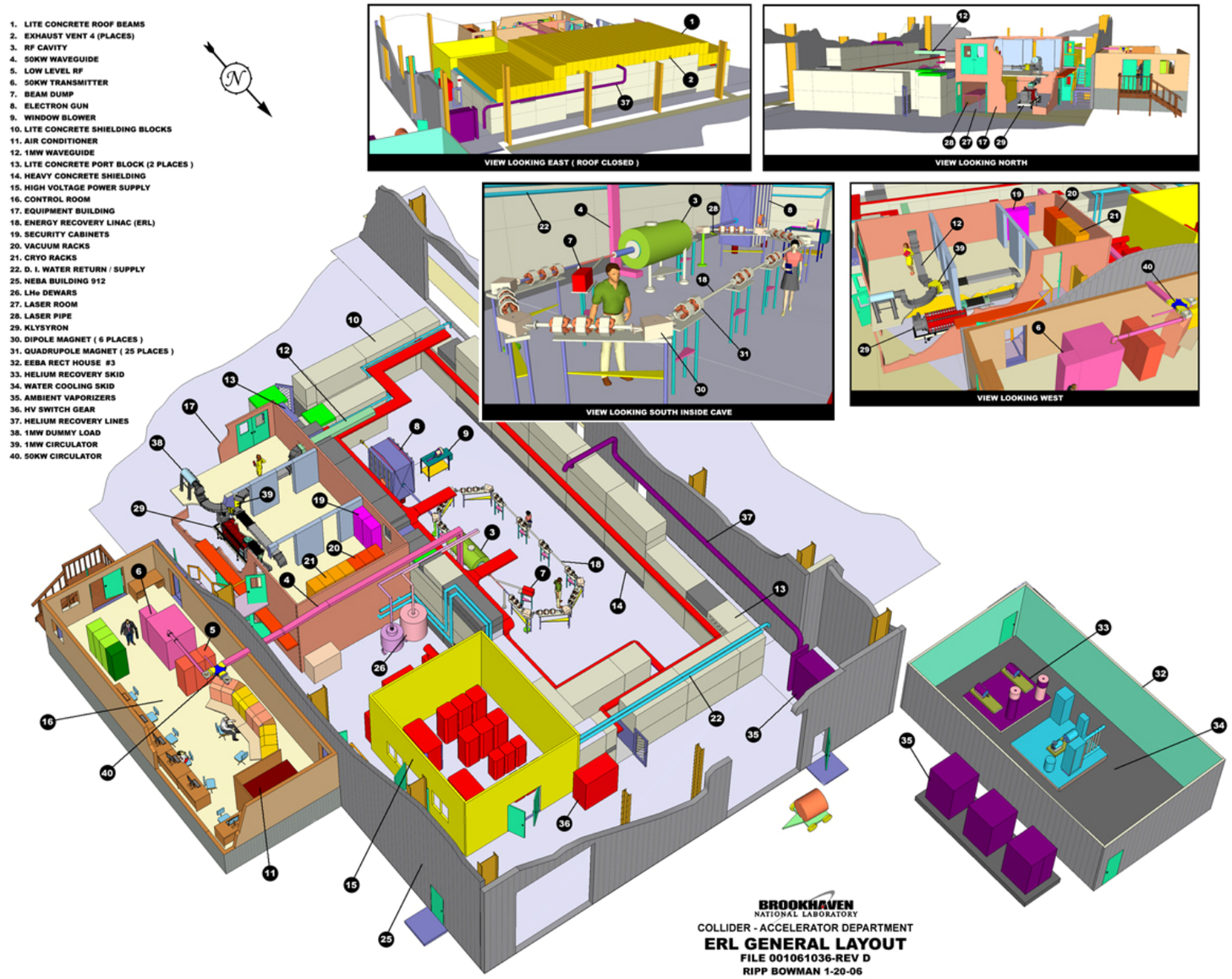

Figure 1.2.b Drawing of Prototype ERL in Building 912

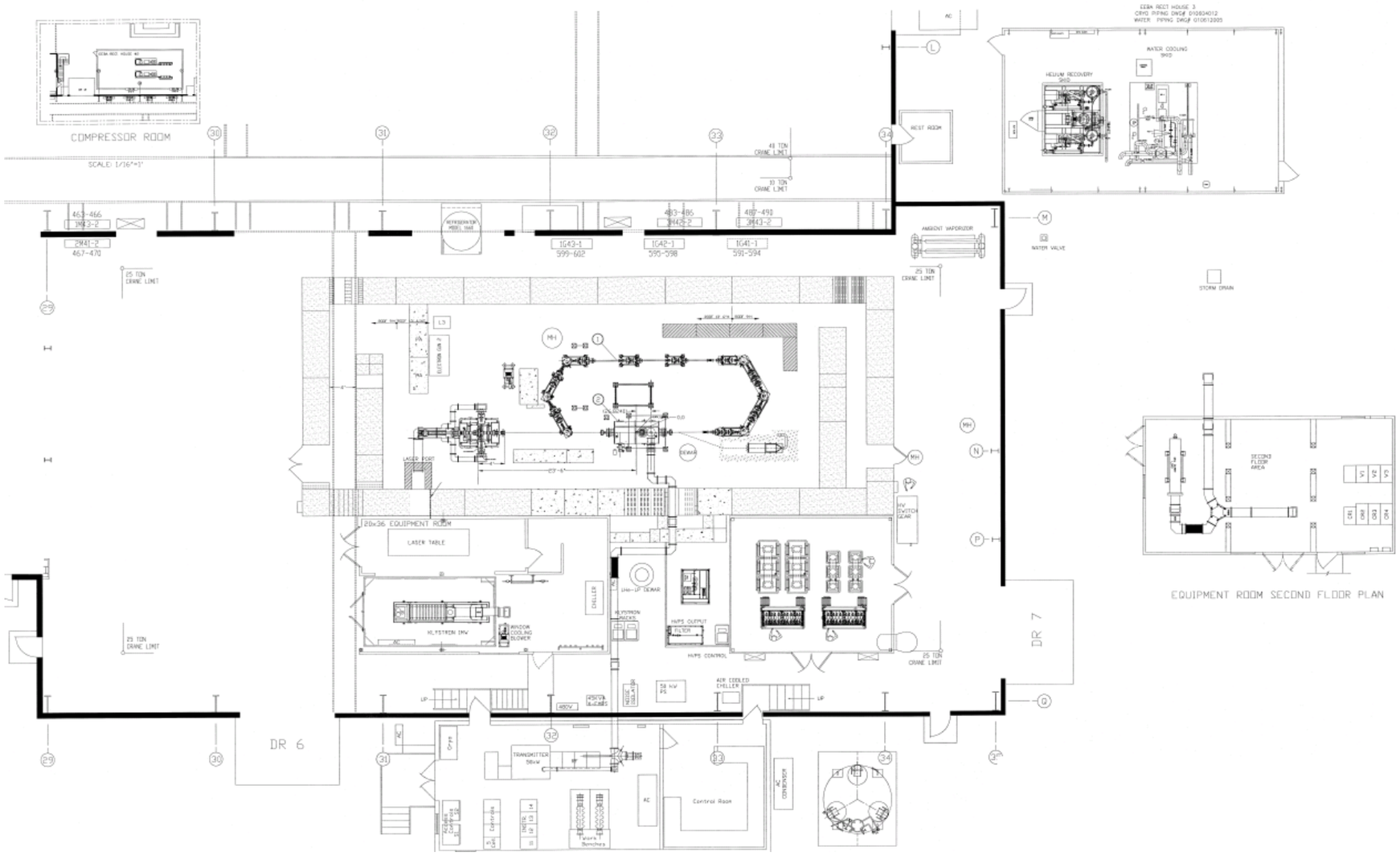

Figure 1.2.c Drawing of Prototype ERL Enclosure and Ring

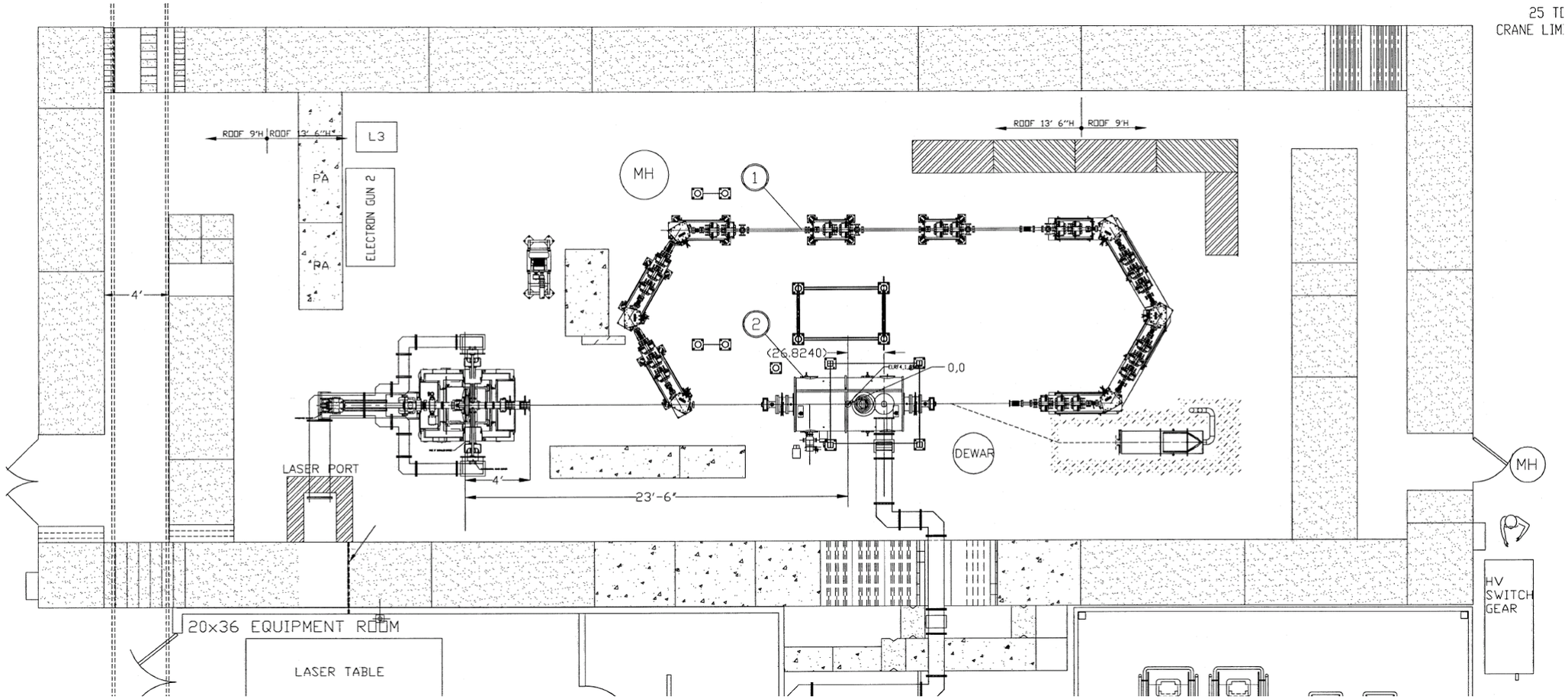

Figure 1.2.d Drawing of Prototype ERL Laser, Klystron and Power Supply Rooms

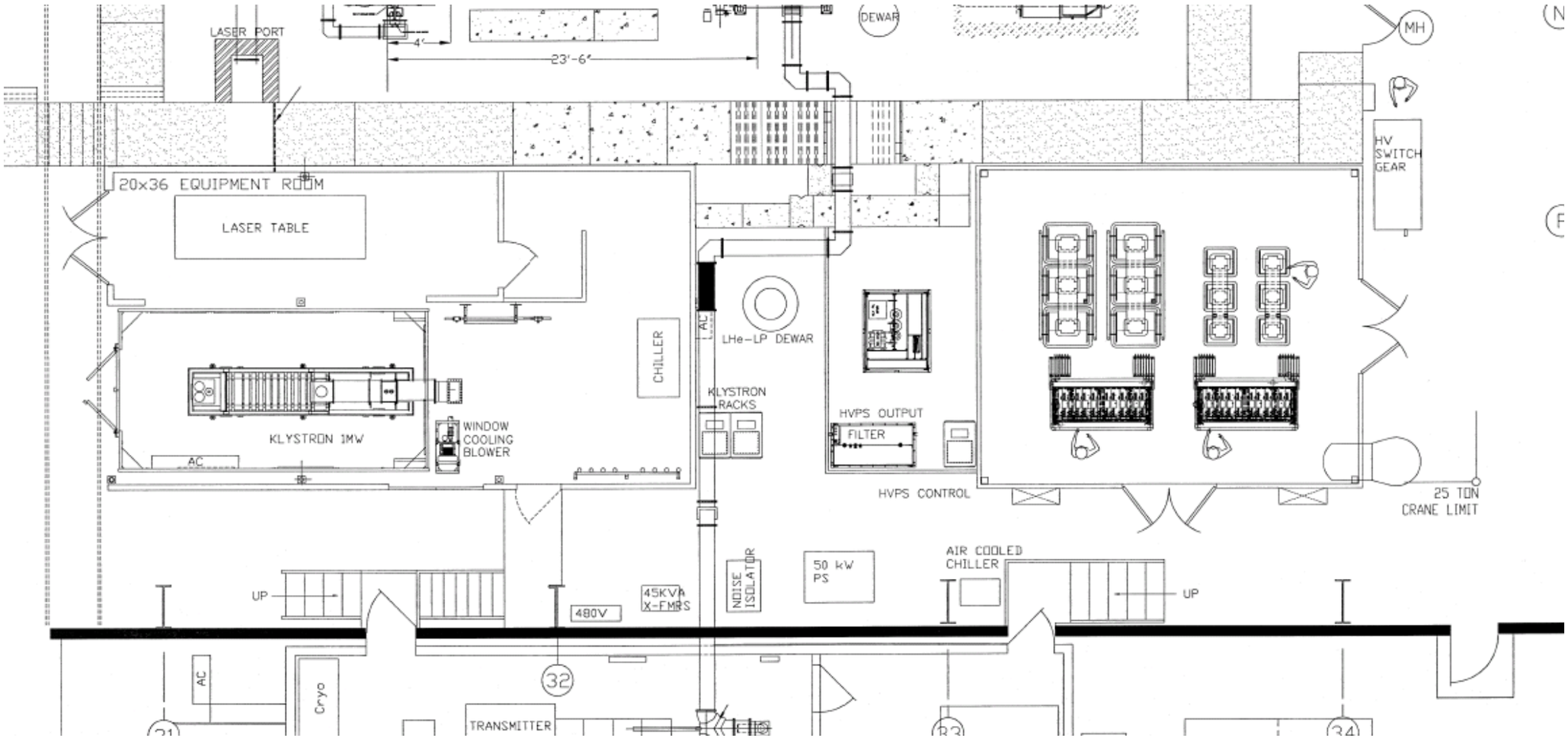

Figure 1.2.e Drawing of Prototype ERL Control Area and Nitrogen Storage Tank

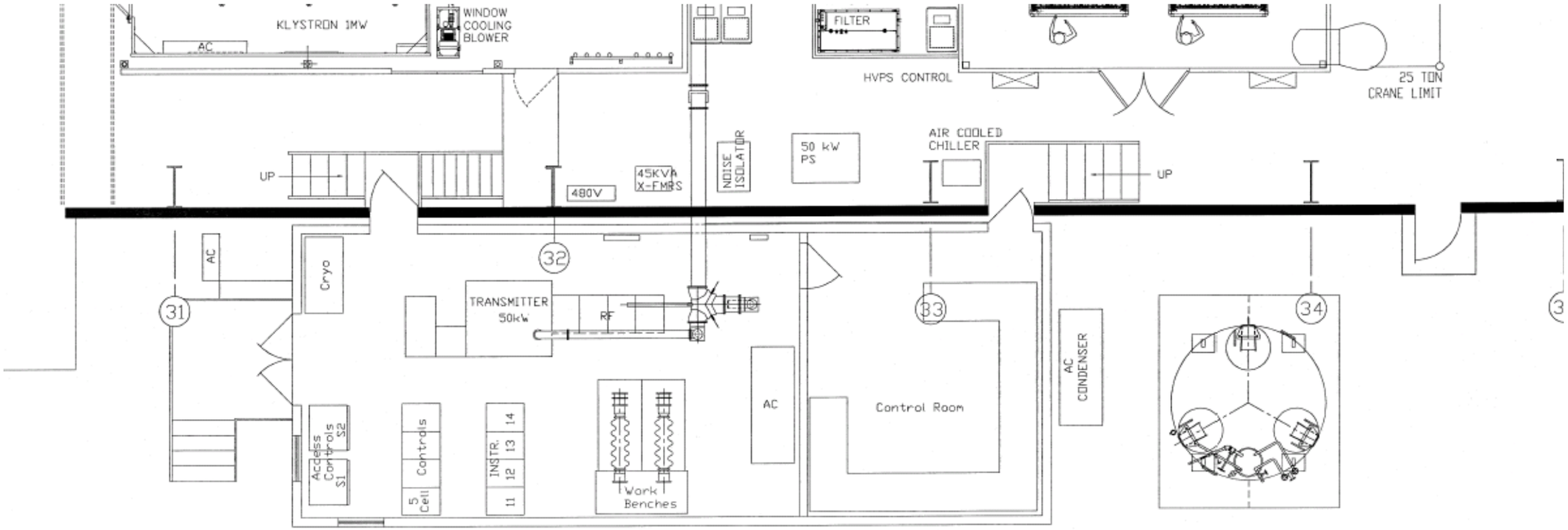

Figure 1.2.f Drawing of Prototype ERL Second Floor Level

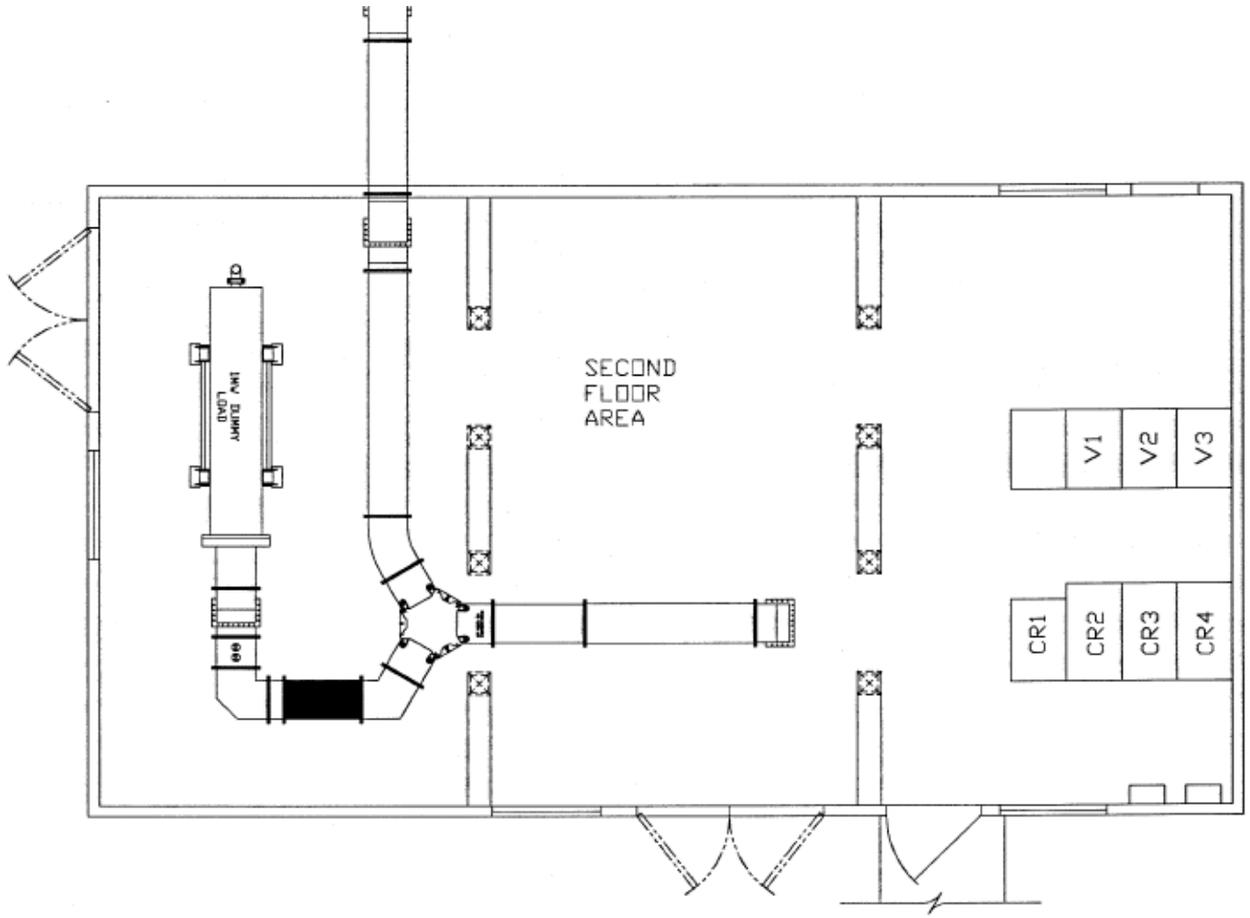

Figure 1.2.g Drawing of Prototype ERL Cooling Water Skid and Cryogenic Helium Recovery Areas

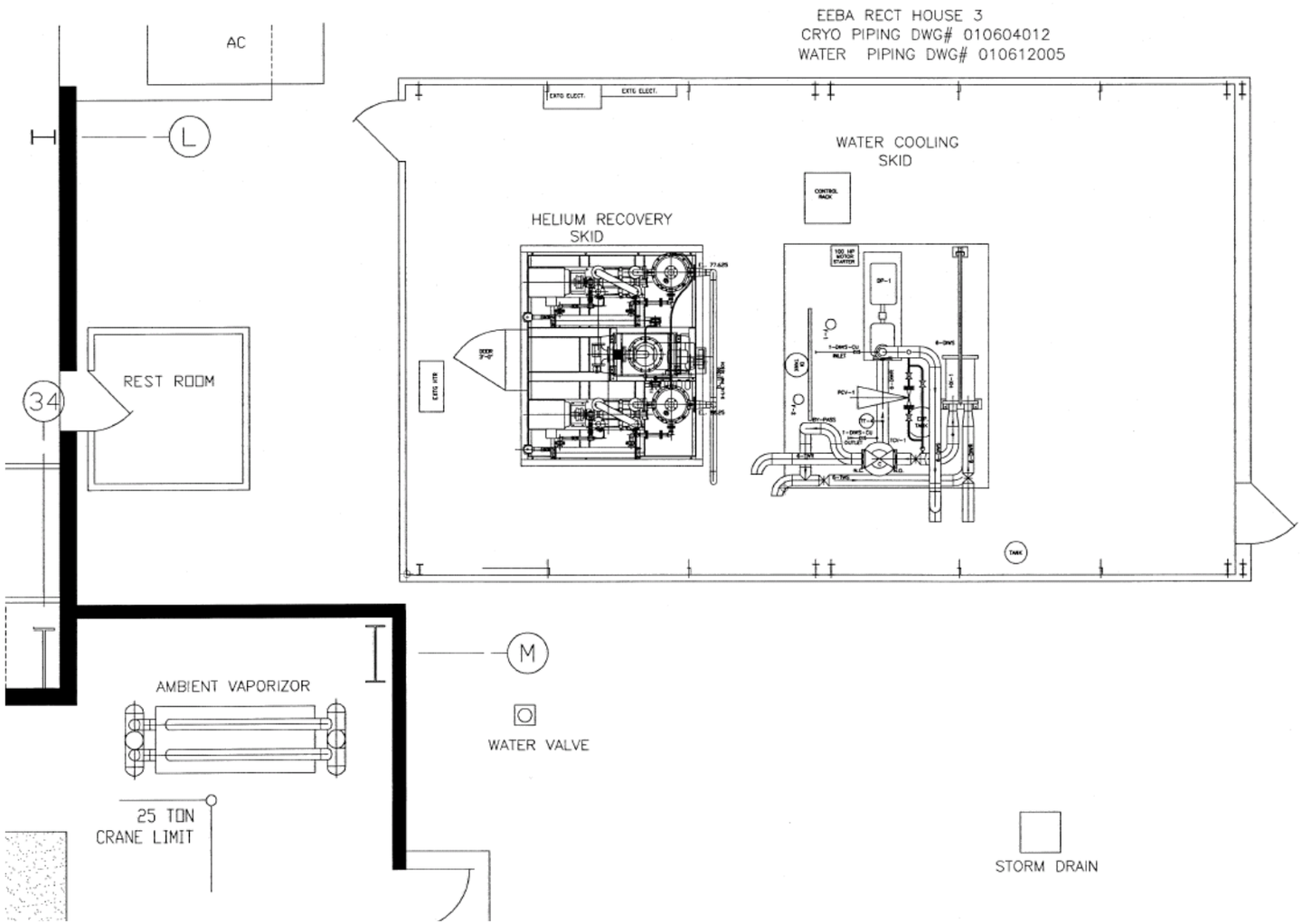

Figure 1.2.h Drawing of Prototype ERL Helium Compressor Room

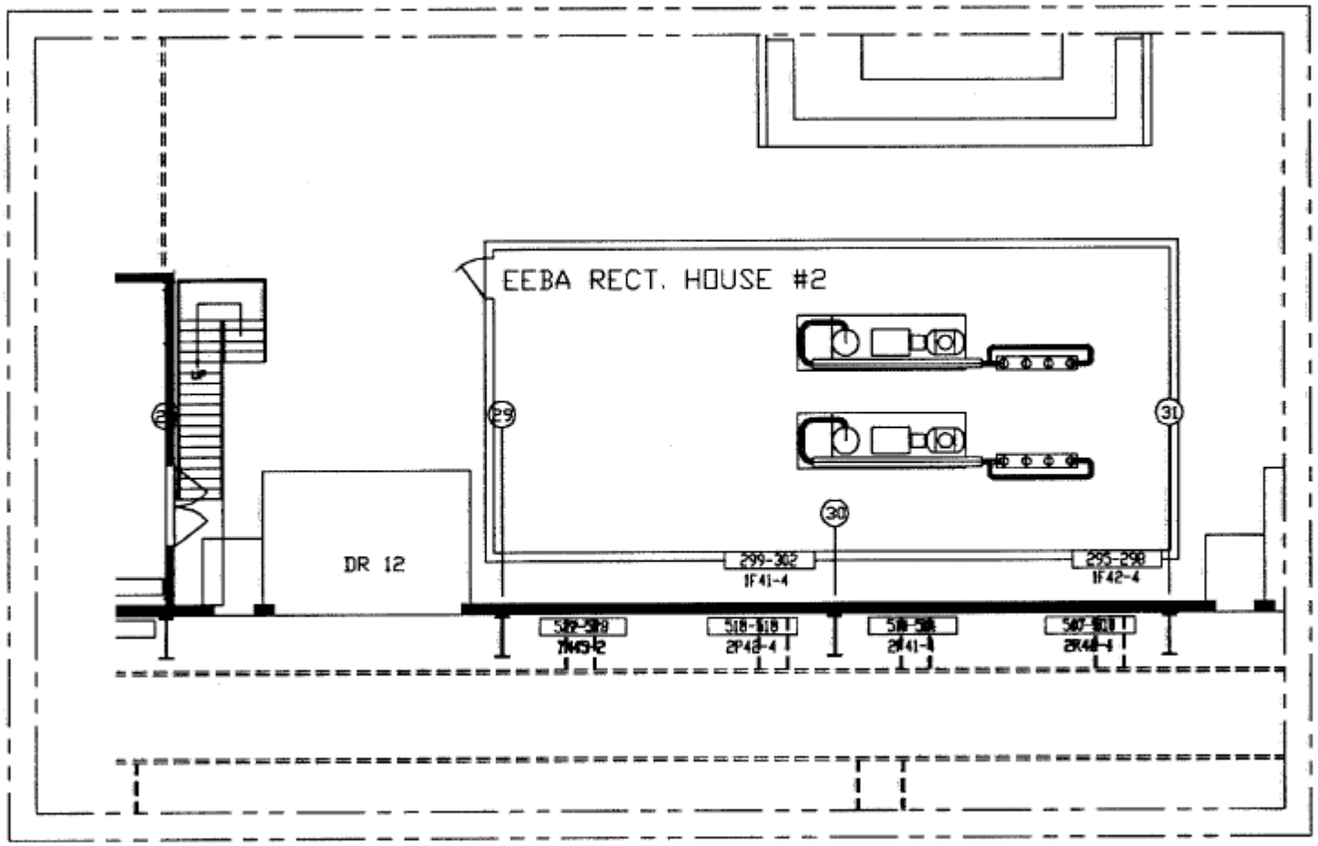

In RHIC, the ion-beam bunch size can be further reduced to maximize luminosity[1] at the intersecting regions. Reduction of the energy of the motion of a bunch, and thus reduction of the size of a bunch, is termed "cooling." Cooling requires some friction force, and the friction force must be added. The most common methods are stochastic cooling and electron cooling. Electron cooling is the method to be studied with the Prototype ERL. This type of cooling will eventually be used to reduce the beam size in the RHIC ion storage rings. "Cold" electrons will be used to cool the "hot" ion beam. The result of cooling is a smaller beam size and a higher particle density, which leads to greater luminosity. It is estimated that increases in luminosity by a factor 10 will be achievable using electron cooling. Thus, collisions would occur at 10 times the present rate enabling physics processes to be studied that would otherwise be unachievable due to the practical constraint of time.

Electron cooling has been used in many ion rings before. However, the implementation of electron cooling in RHIC is more complicated than any existing cooler. RHIC's high beam energy requires electron energy of 55 MeV. While other coolers use a DC electron beam, the only way to make a cooling beam with 55 MeV is with a superconducting ERL. In order to verify out the eventual RHIC ERL design, the Collider-Accelerator Department (C-AD) built a smaller prototype of the ERL in Building 912. This Prototype ERL in Building 912 generates and accelerates an intense, 100 mA or greater, electron beam with energy up to about 25 MeV. The energy recovery aspect is due to the fact that the electron beam decelerates to few MeV

[1] Luminosity is expressed in units of $cm^{-2}\ s^{-1}$ or $b^{-1}\ s^{-1}$. Luminosity is an important quantity that characterizes performance. For RHIC, luminosity is directly proportional to the revolution frequency, the number of bunches in one beam, the number of particles in each bunch in yellow ring, and the number of particles in each bunch in the blue ring, and it is inversely proportional to the cross sectional area of the bunches. If the number of particles crossing each direction per unit time remains unchanged, then smaller bunch cross-sectional-area leads to greater luminosity.

before being dumped, and most of its kinetic energy is recovered in an RF field. The overall plan is to test the concepts and stability criteria for very high current ERLs to be used at RHIC.

A brief description of the prototype system is as follows: An electron beam is created in a photo-cathode RF gun. At the exit of the gun, the electron energy is planned to be about 3.5 MeV. The beam is injected into a superconducting RF cavity, and accelerated up to 25 MeV. The beam is then passed through a "ring" and again enters the RF cavity. The beam passes into the RF cavity with a 180 degree phase shift relative to the accelerating phase of the cavity and the beam is therefore decelerated. With beam energy reduced to electron gun injection energy (3.5 MeV), a dipole magnet deflects the circulating beam into the beam dump.

1.3. Intentionally-Designed Protection Afforded the Public, Workers and Environment

Engineered controls include the Access Control System, fire-protection system, fixed-location interlocking area-radiation monitors and ionizing-radiation shielding. Administrative controls include posting, fencing, training and qualifications for radiation workers and visitors. Additional administrative controls include personnel dosimeters, Radiation Work Permits and As Low As Reasonably Achievable (ALARA) reviews of jobs and experiments when needed.

Radiation surveys using portable radiation monitors are used to verify the radiological controls at Prototype ERL on a regular basis. The limit on the beam in the Prototype ERL is such that exposure to individuals in Controlled Areas and in uncontrolled areas is designed to be less than the annual Brookhaven National Laboratory (BNL) dose limits that are listed in the

Accelerator Safety Envelope (ASE). Specific Prototype ERL beam limits are reviewed by the C-AD Radiation Safety Committee (RSC) before operations, and are also listed in the ASE.

The C-AD has embraced BNL's Integrated Safety Management System (ISM) as a basic protection for workers and experimenters. In order to guide operations and maintenance of the accelerator and associated systems at the Department level, an administrative control based on ISM and termed "Work Planning and Control" is used.

The BNL dose limits were derived from the administrative and engineered controls listed in 10CFR835 "Occupational Radiation Protection" and DOE Order 5400.5 "Radiation Protection of the Public and the Environment," which establish radiation protection standards, limits and program requirements for protecting employees and the public from ionizing radiation resulting from the conduct of DOE activities. These requirements are promulgated downward into BNL's RadCon Manual, and further into Departmental-level authorization documents and procedures.

1.4. Codes of Record

The following requirements are relevant to the Prototype ERL and are used to establish safety for the workers and the public:

- Design Codes
  - National Fire Protection Association (NFPA) 70, ''National Electrical Code'' (2005)

  - NFPA 70E, ‘‘Standard for Electrical Safety in the Workplace’’ (2004)
  - American Society of Mechanical Engineers (ASME) Boilers and Pressure Vessel Code, sections II, V, VIII, IX and X. including applicable Code Cases (2004)
  - ASME B31 (ASME Code for Pressure Piping) as follows:
    - B31.3—2002—Process Piping (as applicable to the cryogenic system)
    - B31.9—1996—Building Services Piping (as applicable to the water cooling system)
- Consensus Safety Standards
  - ANSI Z136.1, ‘‘Safe Use of Lasers’’ (2000)
  - ANSI Z49.1, ‘‘Safety in Welding, Cutting and Allied Processes,’’ sections 4.3 and E4.3 (1999)
  - American Conference of Governmental Industrial Hygienists, ‘‘Threshold Limit Values for Chemical Substances and Physical Agents and Biological Exposure Indices’’ (2005)
- Federal Regulations
  - 10CFR835, Occupational Radiation Protection
  - 10CFR851, Worker Safety and Health Program
- DOE Orders
  - DOE Order 420.2B, Accelerator Safety
  - DOE Order 420.1A, Facility Safety, §§ 4.2 and 4.4
  - DOE Order 414.1C, Quality Assurance
  - DOE Order 5480.19, Conduct of Operations
  - DOE Order 5400.5, Radiation Protection of the Public and the Environment

- DOE Order 450.5, Environmental Protection Program
- DOE Order 435.1, Radioactive Waste Management
- DOE Order 243.1, Records Management Program
- DOE STD-1020-2002, Natural Phenomena Hazards Design And Evaluation Criteria For Department Of Energy Facilities

2. Summary/Conclusions

2.1. Results and Conclusions of the Analyses Provided In the SAD

The Prototype ERL accelerator is a facility with negligible offsite impacts, with extractable beam that goes to a beam dump, two points of entry, one enclosure, multiple operators/users, and multiple active safety systems. In addition to being able to create radiation levels above 5 mrem/h, unique non-radiation hazards such as potential for oxygen deficiency (ODH) exist.

It is concluded that this accelerator is subject to DOE O 420.2B Accelerator Safety, and an ASE for routine operations must be approved at the local DOE site office.[2] Additionally, according to Table 1 in the DOE Accelerator Safety Order Guide, the Safety Assessment Document and the ASE are to be tailored, as needed, to address workplace/onsite hazards and demonstrate no more than negligible offsite impacts. These requirements are promulgated in BNL's Standards Based Management System (SBMS) Accelerator Safety Subject Area.

Offsite impacts or major on-site impacts are "negligible" due to the physical aspects of the Prototype ERL whereby it is dependent upon an external energy source; that is, electric power that can be easily terminated. The primary hazard is prompt ionizing radiation that is limited to regions where the beam is maintained and is in existence only when a beam is present.

[2] DOE Guide 420.2-1, 7-1-05, Table 1. Tailoring of Accelerator Safety Order Requirements

2.2. Comprehensiveness of the Safety Analysis and Appropriateness of the ASE

The Safety Assessment Document (SAD) for Prototype ERL areas is consistent with DOE Orders. The format for this SAD closely follows the prescription for an SAD given in the DOE Guide 420.2-1.

The smoke and heat detection system, the ODH system and the access control system are identified as personnel-safety significant. The sprinkler protection system is designed to protect equipment to ensure timely continuity of the research in the event of a fire.

The shielding policy is clearly stated (see Appendix 3, C-AD Shielding Policy). Optimization methods are used to assure that occupational exposure is maintained ALARA in developing and justifying facility design and physical controls. Models used for dose rate predictions are described in the SAD and are verified against actual measurements.

Significant occupational safety and health aspects and environmental aspects are identified and adequate controls are described.

The SAD clearly identifies the safety and health aspects of all portions of the facility including the accelerator itself, beam transport components and the support facilities. The organizational structure and Environment, Safety, Security, Health and Quality (ESSHQ) programs for commissioning and operating the Prototype ERL are adequately described.

2.3. Appropriateness of the Accelerator Safety Envelope

On the basis of the safety analysis documented in Chapter 4 of the Prototype ERL SAD, associated risk assessment forms in Appendix 6, and the negligible environmental impact of this facility, the ASE conforms to requirements set forth in the BNL SBMS Subject Area, Accelerator Safety.

3. Site, Facility and Operations Description

3.1. Environment Within Which the Prototype ERL is Constructed

The accelerator site location is characterized in the following paragraphs. Information addresses adjacent facilities that may impact Prototype ERL safety or operations. The treatment of site geography, seismology, meteorology, hydrogeology, and demography would be duplicative of analyses performed in compliance with National Environmental Policy Act (NEPA) documents and the C-AD SAD.[3] Thus, it is not repeated here.

3.2. Prototype ERL Characteristics Related To Safety

The specific Prototype ERL characteristics related to safety include:

- A formal conduct of operations program that uses procedures, work planning and authorizations for all work
- Safety features and safety markings on equipment (e.g., pressure relief valves, burst disks, ground-fault alarms, ventilation, Underwriters Laboratories (UL) marks, American Society of Mechanical Engineers (ASME) code stamps, etc.)
- Safety limits and safety envelopes for routine operations
- Access to hazardous enclosures using interlocks for non-ionizing and ionizing radiation protection
- Access to hazardous enclosures using Kirk Locks and Lockout/Tagout (LOTO) for electrical protection

[3] C-AD Safety Assessment Document, http://www.rhichome.bnl.gov/AGS/Accel/SND/c-a_sad_and_ase.htm

- Radiation shielding to control routine and fault levels of ionizing radiation
- Magnetic field shielding and warnings to protect workers who have medical implants
- Configuration controls for Prototype ERL drawings and equipment locations
- Formal design reviews and formal safety reviews for either new equipment or modifications to existing equipment
- Containment of non-ionizing radiation, such as laser and RF, within enclosures
- Continuous monitoring and alarms for fire, smoke, ODH, water leaks and ionizing radiation
- Certified hoists, cranes and rigging equipment
- Materials, welds, welding inspections, and pressure tests for pressurized equipment that meets pressure safety requirements in 10CFR851
- Trained and qualified staff for accelerator operations and maintenance activities
- Testing and calibration of safety related equipment and monitors

These characteristics that are related to safety are described in more detail in the sections that follow.

3.3. Management Methods Used In Operating the Prototype ERL Accelerator Facility

The C-AD is administered and organized to assure safe operation in accomplishing its mission. Its mission is to:

- Excel in environmental responsibility and safety in all department operations
- Develop, improve and operate the suite of accelerators used to carry out the program of accelerator-based experiments at BNL

- Support the experimental program including design, construction and operation of the beam transports to the experiments plus partial support of detector and research needs of the experiments
- Design and construct new accelerator facilities in support of the BNL and national missions.

In meeting its mission, the C-AD is under a formal Conduct of Operations Agreement with the Department of Energy.[4] The documentation that is used to comply with this agreement is the C-AD Operations Procedure Manual, called the Collider-Accelerator OPM, which specifies key procedures, chain of command, authorized personnel and other operational aspects.[5] Because it is capable of stand-alone operations, the Prototype ERL has a supplemental Conduct of Operations Agreement.[6] To take advantage of existing C-AD practices and systems, Prototype ERL procedures are in the C-AD OPM. The management that is used to assure that Prototype ERL personnel are qualified in safe operations is the C-AD management.[7] Prototype ERL operations personnel are qualified via a training program, including formal examinations, to certify operational qualifications where appropriate.

Only authorized Department personnel operate the Prototype ERL.[8] Direct daily supervision of shift operations is the responsibility of the on-duty Prototype ERL Operator in Charge. All Operators are authorized to shut down the Prototype ERL whenever an unsafe condition arises, or whenever they think that continued operation is not clearly safe. They are also authorized to take any other corrective safety- or environmental-protection-action as

[4] http://www.rhichome.bnl.gov/AGS/Accel/SND/conductofops.htm Conduct of Operations Agreements
[5] http://www.rhichome.bnl.gov/AGS/Accel/SND/procedures.htm Operations Procedure Manual
[6] Prototype ERL Conduct of Operations Agreement
[7] http://www.rhichome.bnl.gov/AGS/Accel/SND/OrgChart/OrgChart.pdf, see Chair's box on chart.
[8] http://www.rhichome.bnl.gov/AGS/Accel/SND/OPM/opm_chapter_1.htm, see OPM 1.1.

indicated in the Collider-Accelerator OPM. All scheduled operational-related maintenance is done with the authorization of the Prototype ERL Operations Supervisor and the C-AD Maintenance Coordinator, with the work-control authorizations prescribed in the Collider-Accelerator OPM and with the knowledge of the on-duty Prototype ERL Operator in Charge.

The role, responsibility, accountability and authority statements (R2A2s) establish the expectations and duties of Prototype ERL managers and staff for carrying out the work consistent with external and internal requirements.[9]

Subject Areas are BNL documents that contain basic requirements and guidelines that apply to a broad group of staff across BNL.[10] Subject Areas were developed to support the implementation of national and consensus standards. In the case of the Prototype ERL, the basis for operations is defined in the Prototype ERL Conduct of Operations (ERL CO) agreement, the Prototype ERL SAD and ASE. Subject Area requirements, where applicable, have been flowed down into these documents.

Prototype ERL operations and maintenance procedures include task- or group-specific procedures that are used to implement C-AD management practices. The C-AD ESSHQ Division ensures that Prototype ERL operations and maintenance procedures are current and that they are in conformance with Laboratory-level governing documents, such as the Prototype ERL SAD, and the DOE approved Prototype ERL ASE.

[9] https://sbms.bnl.gov/ R2A2 Subject Area
[10] https://sbms.bnl.gov/ Subject Areas List

The C-AD ESSHQ programs that cover Prototype ERL operations are indicated in Figure 3.3.a. The Associate Chair for ESSHQ is a member of the C-AD Chair's Office. The Associate Chair's roles are to implement new or revised environmental, waste, security, safety, health, training, human performance and quality programs, to inform personnel on the status of ESSHQ, to establish clear and complete safety-related communications practices and to maintain existing ESSHQ programs. The overall approach is to integrate ESSHQ requirements into all work using procedures and practices that are designed to ensure a safe and healthy environment.

Figure 3.3.a Operations Programs for ESSHQ at C-AD

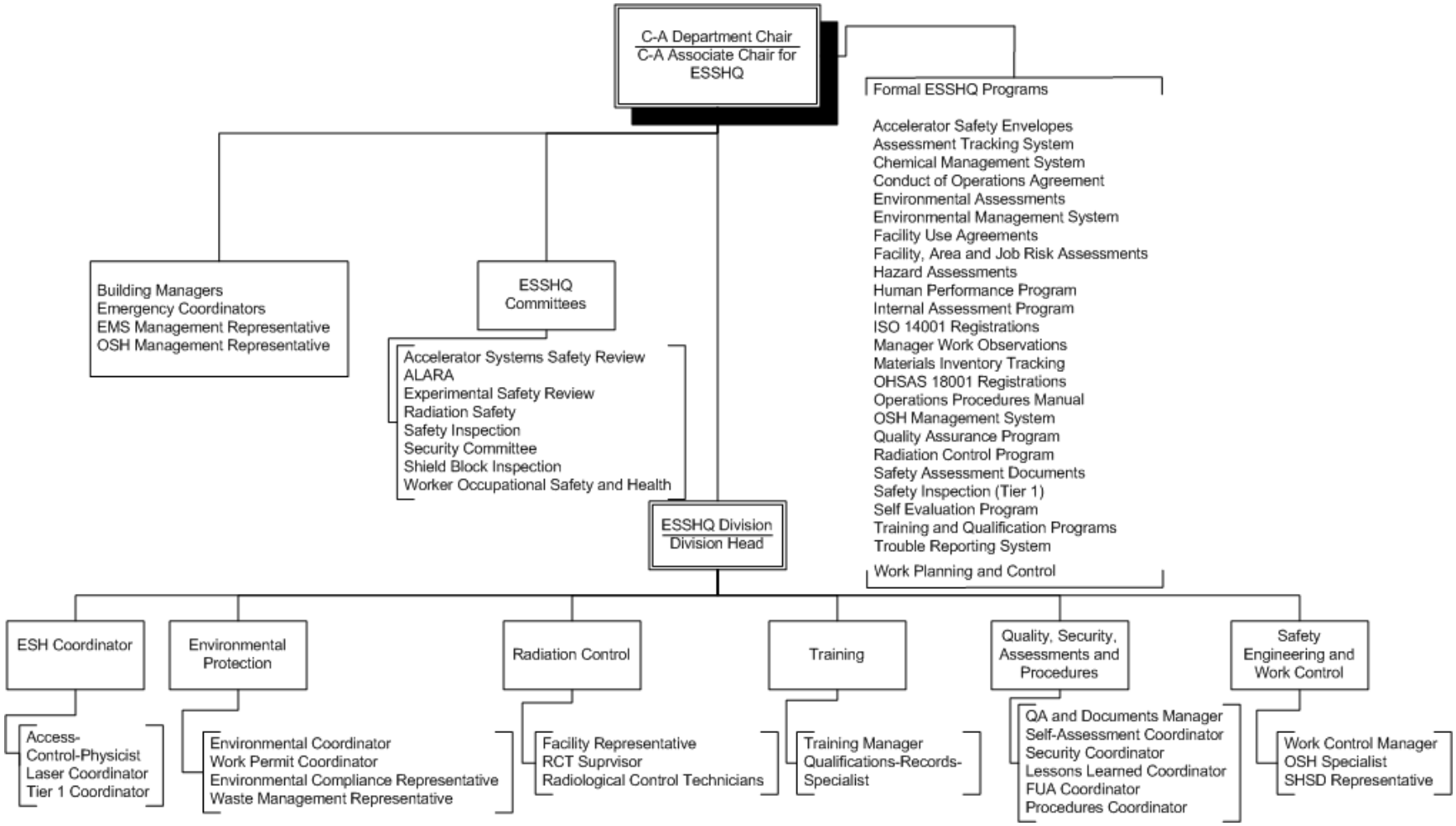

"Safety" encompasses safety, health and environmental protection including pollution prevention and waste minimization. DOE has identified five Core Functions to manage safety, and identified seven Guiding Principles for performing the five Core Functions. The BNL management system that includes the five Core Functions and seven Guiding Principles is termed "Integrated Safety Management (ISM)." BNL's management systems to implement ISM are located in the SBMS.[11] SBMS is on-line with links to all referenced documents. The SBMS satisfies the contractual requirement for documenting ISM related practices lab-wide.

The C-AD uses safety committees and ESSHQ staff to define the scope of the experiments or work, identify and analyze hazards and develop hazard controls. The ALARA Committee, Experimental Safety Review Committee, Accelerator System Safety Review Committee and RSC meet requirements established in SBMS. These Committees are composed of members of the C-AD, other BNL scientific Departments and members of the BNL Environment, Safety and Health (ESH) Directorate. These Committees operate under a system of formal procedures contained in the C-AD OPM.

Self-assessment and self-evaluation are carried out by managers by using the annual Management Review practice and by using Manager Work Observations throughout the year. Individual employees use the C-AD work planning and Safety Walk programs for self-assessment. Project physicists and Liaison physicists use the C-AD's Committees for project safety reviews and facility and experiment safety inspections. Formal procedures for conducting self-assessments and self-evaluations are listed in the C-AD OPM. Assuring self-assessments are properly implemented is the purview of the C-AD QA Group. The C-AD QA Group also

[11] https://sbms.bnl.gov/ Subject Areas List

tracks corrective actions resulting from self-assessments and self-evaluations via the Assessment Tracking System (ATS).[12]

Third-Party Certification of Management Systems for ESH

The Prototype ERL in Building 912, by way of BNL certification, employs third-party certification for its Occupational Safety and Health (OSH) management system (MS) and its environmental management system (EMS). The international OHSAS 18001 and ISO 14001 standards are consensus standards used for third-party certification of the OSHMS and EMS. Certification is the process by which a third party confirms, in writing, that an organization's management system meets the specified requirements in the standards. Successful certification means C-AD's OSHMS and EMS meet all requirements in the international standards. The certification body is a third party (non-BNL) organization that assesses management systems. This certification body is often referred to as a "registrar."

In addition to annual surveillance audits, when the certificate of registration expires, which is every three years, the certification body conducts a complete reassessment.

[12] http://ats.bnl.gov/ Assessment Tracking System

3.4. Design Criteria and As-Built Characteristics of Prototype ERL, Supporting Systems and Components with Safety-Related Functions

Superconducting RF Cavity

The superconducting linac cryomodule (Prototype ERL cryomodule) is shown in the figure below. These components are installed in the Prototype ERL facility in Building 912.

The superconducting linac cryomodule is an assembly used to accelerate electrons in the ERL. Its main element is a niobium structure called a cavity. The niobium cavity is shown in the figure below. It comprises 5 cells, to obtain a repeating pattern of the electromagnetic field in order to get efficient acceleration. The cavity resonates at a frequency of 703.75 MHz with microwave power that is fed through a port called the Fundamental Power Coupler. When cooled to liquid helium temperature, the niobium cavity becomes a superconductor, reducing the microwave losses so that high fields (up to 20 MV/m) can be set up in the cavity using a few 10's of watts of RF power. Naturally, such high fields can lead to hazardous acceleration of electrons over short distances. The high fields also cause field emission of electrons from the surfaces of the cryomodule; electrons that are accelerated to various energies by these fields until they are stopped in their path, which then results in x-ray radiation.

The details of the cryomodule are shown in the next figure. The 5-cell niobium cavity assembly is enclosed in a titanium helium vessel. The cavity is equipped with a tuner, fundamental power coupler and beam pipes for bringing the electron beam in and out of the

cavity. The beam pipes also serve as conduits for the non-fundamental microwave power generated by the beam passing through the cavity, what is called HOM (Higher Order Mode) power. The HOM microwave power escapes the cavity due to the doorknob shape of the end pieces of the cavity, and is dissipated as heat in ferrite assemblies outside of and on either side of the cryomodule. The cavity is maintained at liquid helium temperature by liquid helium brought into the cavity's helium vessel through a 2 K main line. To reduce cryogenic losses the cavity system is enclosed in a vacuum vessel equipped with a thermal shield, comprised of a metal envelope covered by Multi-Layer Insulation (MLI). The cavity must be maintained in a low ambient magnetic field while being cooled down, and for this purpose, there are two magnetic shields enclosing the cavity.

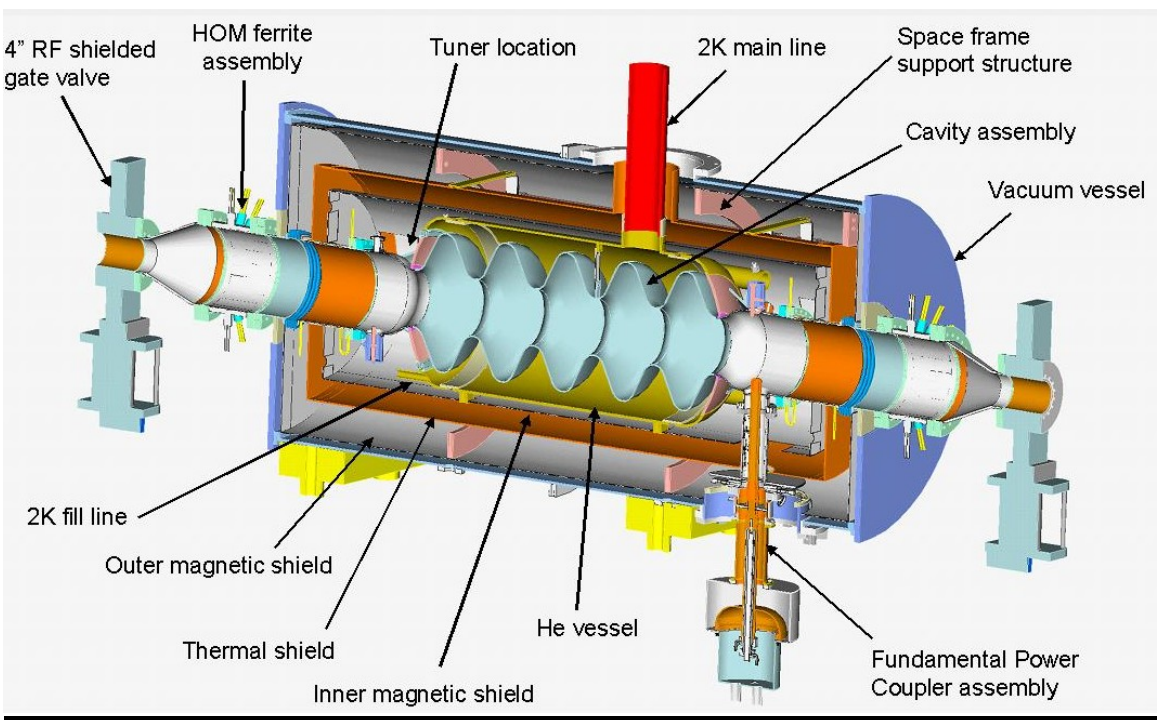

RF Systems for Superconducting Injector and Superconducting Cavity

The Prototype ERL accelerator consists of a high brightness RF superconducting electron injector followed by a superconducting linac cryomodule used to accelerate electrons. The microwave power used to accelerate electrons in the superconducting electron injector is provided to the cavity by a 1 MW RF klystron delivered via two 500 kW fundamental power couplers at a frequency of 703.75 MHz. The microwave power used to accelerate electrons in the superconducting linac cryomodule is provided by a 50 kW continuous wave (CW) Input Output Controller (IOC) that also operates at a frequency of 703.75 MHz. The cavity resonates with microwave power fed through a port called the fundamental power coupler.

The exposure to non-ionizing RF radiation is controlled to prevent the radiofrequency power generated by the klystrons from providing a source of personnel hazard. Personnel cannot be near the 1 MW klystron source during operations due to a coordinated key system preventing access to its enclosure. Personnel cannot be near the RF power at the load since it is inside the accelerator enclosure, which is interlocked during operation via the ERL Access Control System (ACS). Between the klystron and accelerator structures, the RF radiation is enclosed in a waveguide. Additionally, outside the waveguide, the RF power is confined to the vacuum enclosure of the klystron and accelerator structures, which provides a redundant safety protection feature near the load or near the source. A break in the vacuum integrity in either of these would remove the insulation required to continue generating RF power. Finally, the RF radiation contained within the system's waveguides would be surveyed as described in Subject Area: Radiofrequency/Microwave Radiation, and it will be confirmed that ambient RF radiation is

within the limits defined by the American Conference of Governmental Industrial Hygienists (ACGIH) and OSHA.

The emission of x-rays due to Bremsstrahlung from the 1 MW RF klystron is prevented via steel shield housing around the tube and tube base.

Injector System

The injector system for the Prototype ERL is shown schematically below. The injection system is made up of several major subsystems: the superconducting RF photoinjector, the cryogenic system, the cathode insertion device, and the RF system.

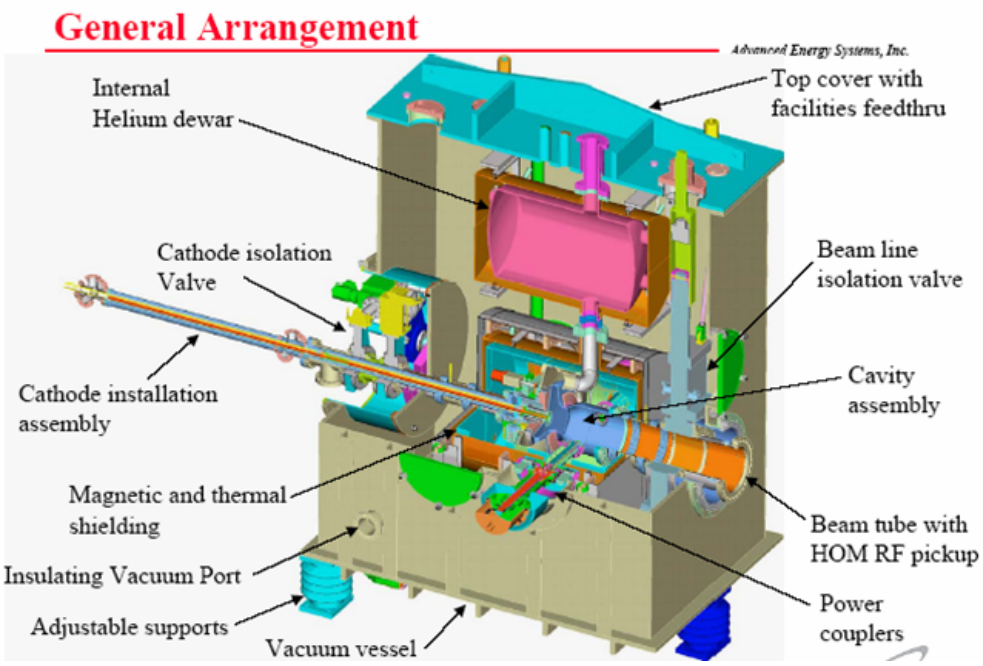

The photoinjector is an all niobium 703.75 MHz superconducting RF (SRF) cavity designed to operate at 2 K to produce and accelerate electrons. The microwave power to accelerate these electrons is provided to the cavity by a 1 MW RF klystron delivered via two 500

kW fundamental power couplers. As niobium is a superconductor at liquid helium temperatures, the surface resistance is effectively zero. This means that the microwave power fed to the cavity is almost exclusively delivered to accelerating the electrons, not heating of the niobium, allowing for CW high average current electron beam generation. This means that the 1 MW RF power can deliver a 0.5 A, 2 MeV electron beam to the Prototype ERL loop with minimal power dissipated to the liquid helium bath. During start up and conditioning, there may be dark current[13] generated in the injector. This hazard may produce x-rays when the electrons are accelerated; however, the accelerator enclosure adequately shields this radiation and access to the accelerator enclosure whenever the rf system is on is not allowed by the Access Control System.

The cavity is cooled to superconducting temperatures using 4 K liquid helium provided via external Dewars to the cryostat and internal helium Dewar shown in the schematic above. A large vacuum pump is then used to reduce the pressure over the liquid helium and thus reduce the temperature of the liquid helium to 2 K, the desired operating temperature.

The electrons are generated using a laser irradiated multi-alkali (CsK_2Sb) photocathode, which was produced in a custom deposition system designed to mate to the cathode installation assembly shown above. The laser system used to irradiate these cathodes is a Class IV laser system, with a repetition rate of ~87.75 MHz producing ~8 W of power in 10 ps pulses at 355 nm. The system consists of an oscillator locked to a master RF clock that drives the cavity, followed by a series of amplifier stages, pulse shaper/selector and harmonic crystals. The laser beam is transported to the photoinjector in enclosed beam pipes. The laser power will be low for

[13] Dark current – relatively small current that flows through a photo-sensitive device even when no photons are entering the device.

initial alignment and increased gradually to full power. A Standard Operating Procedure for laser alignment, as per the BNL Subject Area, will be used.

Cryogenic Systems

In addition to the liquid nitrogen storage vessel and helium compressor room, the cryogenic systems include:

- Ballast tank - a liquid helium storage volume mounted above the 5 cell cavity; its purpose is to provide operational time at 2 K for the cavity
- 1.1 K Vacuum Pump - a vacuum pump for sub cooling the boiling liquid helium
- Warm Piping - ambient temperature piping associated with the Prototype ERL cryogenic system
- Transfer Line - cryogenic transfer lines to supply liquid helium to the 5 cell cavity
- Instrumentation - Pressure and temperature instrumentation and their associated I/O and hardware
- Insulating Vacuum System - Vacuum pump to maintain insulating vacuums
- Process Pressure Relief Valves – properly sized relief valves for the Prototype ERL cryogenic system

Non-stamped pressure vessels in the cryogenic systems were reviewed and approved by the BNL Pressure and Cryogenic Safety Subcommittee (PCSS). Specifically, the 5-cell cavity and the SRF gun were determined to be vacuum-rated pressure vessels that have the following

equivalent protections, as per 10CFR851, since these vacuum vessels can be backfill pressurized in the event of failure:

- Design drawings, sketches, and calculations reviewed and approved by the PCSS
- Qualified personnel performed examinations and inspections of materials, in-process fabrications, non-destructive tests, and acceptance tests
- Documentation, traceability, and accountability for each vessel including descriptions of design, pressure conditions, testing and inspection

These vessels are depicted in the following figures that show the 5-cell cavity with its ballast tank and that show where burst disks have been installed.

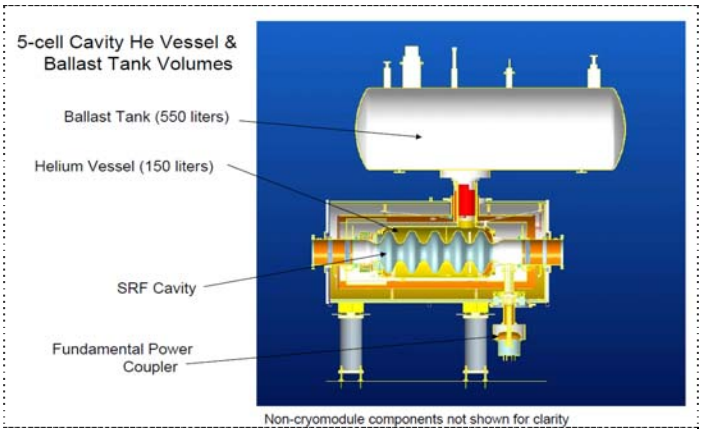

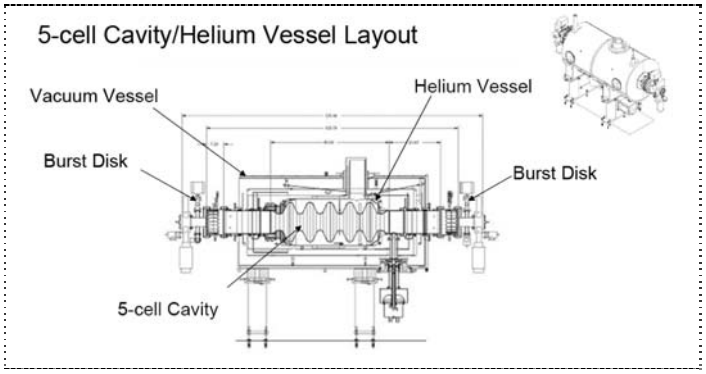

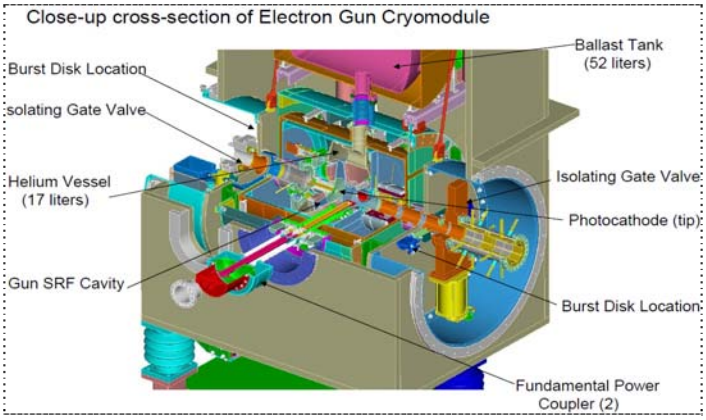

Vacuum Systems

The vacuum systems consist of:

- Vacuum Chambers - stainless steel and aluminum vacuum chambers and beam pipes for Prototype ERL loop vacuum system.
- Vacuum Pumps and Valves – high-vacuum pumps for Prototype ERL loop vacuum systems.
- Vacuum Monitoring and Control System - vacuum gauges and Programmable Logic Controllers (PLC) for Prototype ERL loop vacuum system.

Magnets and Magnet Electrical Systems

The Prototype ERL magnet systems consist of dipole magnets that force the electrons to move in a circle or arc, and quadrupole magnets that act like a lens focusing the electrons to the center of the beam pipe. The Prototype ERL magnet systems include 4 injection-line dipoles, 1 dump magnet, and the ring magnets. The ring magnets include 25 quadrupoles and 6 dipoles.

The electrical power for the accelerator is distributed at 480 volts AC, 3 phases with a high-resistance grounded delta system. The equipment that requires the 480 V AC line voltage input includes ring magnet, dump magnet and injection-line magnet power supplies. Magnet electrical systems include the DC cable for these power supplies. The installation and operation of the power distribution system and the magnet electrical system is in accord with standard industrial practice for this type of equipment. At C-AD, this includes a remote, alarming ground-fault monitoring system.

Electron Beam Dump System

As its name suggests, the beam dump is where electron bunches end up while depositing energy unrecovered by the 5-cell cavity. The beam will be spread on the surface of a water-cooled, cylindrically shaped copper electron beam dump. Dimensions of this beam dump are roughly 62” in length and 19” in diameter. Spreading the beam over this large area is done to ensure that local boiling of the cooling water does not occur. The beam will be spread over this large surface area by magnetic field coils.

Beam Instrumentation

Beam instrumentation is functionally divided into subsystems: position monitors, current monitors, profile monitors, and loss monitors. The majority of the hardware and software is not available commercially off-the-shelf, but rather is designed and produced specific to the intended function. With the exception of loss monitors, all sensors are integral to the vacuum envelope.

None of the subsystems are interfaced to the personnel protection system. The beam-loss monitors are interfaced to the machine protection system, as are the current monitors. As operational experience is gained, portions of additional subsystems may be interfaced to the machine protection system.

Controls System

The ERL control system is based on the RHIC controls system. The controls system allows three basic modes of operation:

- Commissioning: low duty factor, about 100 Hz rep rate, one bunch per pulse
- RHIC mode: 9.37 MHz operation
- Navy mode: 700 MHz continuous

As designed, the RF cavity can only accelerate one bunch without suffering a droop in cavity voltage. When that initial bunch returns to the cavity after one turn, out of phase, all but a small amount of its energy is recovered. This allows a new bunch to be accelerated with the recovered energy.

A work-console composed of standard 19-inch racks with writing shelf attachments are provided in the facility control room. Each of 3 “seats” is equipped with a Linux workstation and 4 flat-panel monitors, configured as a single continuous display resource. Rack space is provided at the console for the access control system panel display and key-tree.

General purpose and project-specific application software for operating and monitoring the equipment and beam characteristics is used. Simple software tools for device control, sequencing, data logging, comfort displays, alarms, and e-logging are used. In addition, the RHIC *post mortem* system, that comprises automatic data recording by front-ends and associated display and summary tools after an abort, has been adapted for ERL.

The residual energy of the beam after recovering most of the energy will be about 1 MW. The beam is spread across the face of the beam dump to prevent thermal hotspots. A monitoring system monitors the spread and verifies proper operation as input to the fast-beam permit system; that is, a fast-beam inhibit response will be generated if beam spreading across the face of the dump fails.

Vacuum and water cooling monitoring for the dump is included in the vacuum and conventional systems. Beam current monitoring of the dump is provided by instrumentation. Beam-loss monitors consist of analog electronics, a comparator module and a channel by channel DC reference to monitor losses. All monitoring is interfaced with the fast-beam permit input.

Conventional Facilities

The conventional facilities service the needs of Prototype ERL with building space, environmental control (Heating, Ventilation, and Air Conditioning (HVAC)), cooling water, electric power, cable tray, radiation shielding, fire detection, rigging and survey services. Located inside the Northeast Building Addition (NEBA) section of Building 912 is the 4-foot thick concrete “Block House”, the Klystron Power Supply Building and a 2-story equipment

building. The Block House requires rigging to open and close the roof to allow the larger pieces of experimental equipment to be installed or removed. The Klystron Power Supply Building was installed by an outside vendor. The equipment building houses security, vacuum and cryogenic control systems, magnet power supplies, a laser room and the Klystron. Outside of NEBA are the Experimental Control Room, two equipment buildings and Building 966, which is office and work space.

Cooling Water System

The Prototype ERL cooling water systems meet ANSI B31.9 Building Services Piping Code for pressure piping. Materials, components and workmanship are in compliance with this code. The system does not operate with pressure relief valves; however, the pumps are sized so as not to increase system pressure beyond the allowable stress for the piping, even if the cooling water stops circulating and the pumps continue to operate. The closed cooling water loops are without reliefs in order to prevent the possible release of low-level activated water to the groundwater.

The cooling tower has more than enough capacity to remove heat generated by all Prototype ERL operations. It is noted that the heat exchanger on the de-ionizer (DI) cooling loop can be expanded to increase heat removal capacity if that loop requires it. The initial planned system loads are shown in Table 3.4; however, actual Prototype ERL operations will determine the need for system changes.

Expansion tanks in this system are not ASME certified however expansion tanks are rated for 150 psi and are located on the low-pressure side of the cooling water system, which is about 20 psi. The ASME Code for Boilers and Pressure Vessels stamp is not required since the water in the tank has a design pressure less than 300 psi and a design temperature less than 210 ^{o}F. On the other hand, design and testing of the expansion tanks conforms to the ASME Code even though the expansion tanks are not stamped.

Table 3.4 Estimated Prototype ERL Cooling Water Heat Loads, Temperatures, Pressures

De-ionized (DI) Low Conductivity Water	Maximum Supply Temperature = 90 °F			
Component	Flow (gpm)*	kW Load**	Delta P	Delta T (°F)
Klystron Collector	385	650	10	11.5
1 MW Dummy Load	200	1000	5	34.2
Beam Dump	385	1000	10	17.8
50 kW Transmitter	20	80	50	27.3
50 kW Dummy Load	10	50	5	34.2
Chiller #1	50	55	10	7.5
10 Magnets @ 2kW each	20	20	50	6.8
Ferrite HOM (3)	15	20	50	9.1
FPC Gun (4 circuits)	5		50	
FPC 5-Cell (2 circuits)	5		50	
Solenoid Magnets (10 each at 2 gpm & 2 kW)	20	20	70	
He Recovery System	70	150	50	14.7
Total DI System Load	800	2045		17.5
DI System Capacity	820 gpm	1800 kW	120 psi	15 °F

* Klystron Collector and Beam Dump in series water flow.
**1000 kW heat load will either be at the 1 MW Dummy Load or at the Beam Dump.

Tower Cooled Components	Maximum Supply Temperature = 85 °F			
Component	Flow (gpm)	kW Load	Delta P	Delta T (°F)
DI Skid	800	2045	10	17.5
Tower Capacity	1000 gpm	3600 kW	200 psi	25 °F

Chiller #1	Maximum Supply Temperature = 86 °F			
Components	Flow (gpm)	kW Load	Delta P	Delta T (°F)
1 MW Circulator	20	50	70	17.1
Klystron Body 1	7	3.3	70	3.2
Klystron Body 2	7	4.8	94	4.7
Chiller #1 Load Total	34	58.1		11.7
Chiller #1 Capacity	45 gpm	60 kW	90 psi	9 °F

Air Cooled Chiller	Supply Temperature = 68 °F @ 6 kW Supply Temperature = 86 °F @ 7 kW			
Component	Flow (gpm)	kW Load	Delta P	Delta T (°F)
50 kW Circulator	7	2	87	2.0
Air Cooled Chiller Capacity	7 gpm	7 kW	90 psi	7 °F

3.5. Design Features That Exclude or Minimize Exposure to Hazards to As Low As Reasonably Achievable (ALARA) During Operation, Maintenance and Facility Modification

Superconducting RF Cavity

- Design reviewed by the C-AD RSC
- Design reviewed by the BNL PCSS
- Compliance with ODH Subject Area
- Burst disks and relief valves
- Access to area controlled with door interlocks
- Radiation shielding for beam loss and Bremsstrahlung
- Magnetic field shielding
- Configuration controlled drawings
- RF contained within vacuum enclosure

RF Systems for Superconducting Injector and Superconducting Cavity

- Design reviewed by the C-AD Accelerator Systems Safety Review Committee
- Access to area controlled with door interlocks
- RF contained within vacuum waveguide or enclosure
- 1 MW Klystron housed in steel shield to absorb Bremsstrahlung
- Configuration controlled drawings

Injector System

- Access to area controlled with door interlocks
- Protective housing for laser and laser shutter interlock
- Laser beam transported in pipe
- Configuration controlled drawings

- Radiation shielding for Bremsstrahlung
- RF contained within waveguide or enclosure

Cryogenic Systems

- Design reviewed by the C-AD Chief Mechanical Engineer
- Design reviewed by the BNL PCSS
- ODH Monitoring
- Ventilation
- Burst disks and relief valves
- Configuration controlled drawings
- The He tank: U-stamped[14]
- The LN2 tank: U-stamped
- Bulk oil tank: U-stamped
- Heat exchangers: U-stamped
- Oil removal demisters: U-stamped
- Carbon Bed: U-stamped
- Cryofab 1000 gallons liquid helium Dewar: U-stamped
- 1660S helium plant coldbox: BNL PCSS reviewed and accepted since this vacuum space can be backfill pressurized
- Ambient vaporizer: U-stamped
- Ballast tank: U-stamped

Vacuum Systems

- Design reviewed by the C-AD Accelerator Systems Safety Review Committee
- Design reviewed by the BNL PCSS where the vacuum space can be backfill pressurized

[14] U stamp – a mark that indicates the pressure vessels was designed and fabricated according to regulations called out in 10CFR851.

- Allowable compressive stresses calculated using ASME Pressure Vessel Code

Electrical Systems

- Designs reviewed by the C-AD Chief Electrical Engineer
- Designed in compliance with NFPA 70 and NFPA 70E
- Ground-fault alarm system
- Lockout capability for all energized equipment
- Nationally Recognized Testing Laboratory (NRTL) or equivalent rated equipment
- Equipment grounding and cable tray bonding
- Enclosures or barriers over conductors
- Kirk-key locks for power supplies
- Co-axial cables with grounded shields for high-voltage cables
- Component labeling system

Electron Beam Dump System

- Design reviewed by the C-AD RSC
- Beam-dump temperature interlocks
- Access to area controlled with door interlocks
- Radiation shielding
- Configuration controlled drawings

Beam Instrumentation

- NRTL or equivalent rated equipment

Controls System

- NRTL or equivalent rated equipment

Conventional Facilities

- Certified hoists, cranes and rigging equipment
- Plant Engineering review and C-AD Chief Mechanical Engineer review of structures supporting heavy loads or structural changes to cranes or buildings
- Shielding requires lifting devices
- Cooling-water leak monitoring and alarms
- Fire, smoke detection and alarm systems
- Configuration controlled drawings
- Component labeling system

Access Control System

- Design reviewed by the C-AD RSC
- NRTL or equivalent rated equipment
- Local and remote radiation alarms
- Configuration controlled drawings
- Annual system testing

Fire Protection System

- Fire Hazards Analysis
- Configuration controlled drawings
- BNL Fire Protection Engineer review
- Smoke detectors
- Sprinklers
- Fire alarms
- Annual system testing

3.6. BNL, C-AD and Prototype ERL Organizational Structure

The Prototype ERL organization (see Figure 3.6) is a sub-set of the C-AD organization and the complete C-AD organization chart can be found at the C-AD website. Responsibility for the safe and reliable Operation of the Prototype ERL resides with the on-duty Prototype ERL Operator in Charge, who resides in the ERL Control Room. The Prototype ERL Operator in Charge is the Prototype ERL Operations Supervisor for the operating personnel, and the focus for all operations related questions. Personnel that are responsible for the day-to-day operations of the Prototype ERL are members of the C-AD Accelerator Division, the C-AD Experimental Support and Facilities Division (ES&FD), and the C-AD Controls Division. Additional personnel who support the operations belong to the C-AD ESSHQ Division, the BNL ESHQ Directorate and the BNL Plant Engineering Division.

Regular meetings are held between the ERL Operations Supervisor, the Main Control Room (MCR) Operations Coordinator when the MCR crew is on-shift, the Deputy Superconducting Accelerator and Electron Cooling Group Leader and group members of the various operating groups to discuss operational problems and possible corrective actions, safety, and other matters of concern. Since the MCR Operations Coordinator and the Prototype ERL Operations Supervisor share operations resources, the chain of command goes through the MCR Operations Coordinator when MCR crew is on-shift. In this way, all C-AD operations resources during an exigent or emergency situation at ERL will be coordinated, and authority clearly established.

Figure 3.6 Prototype ERL Operations Organization

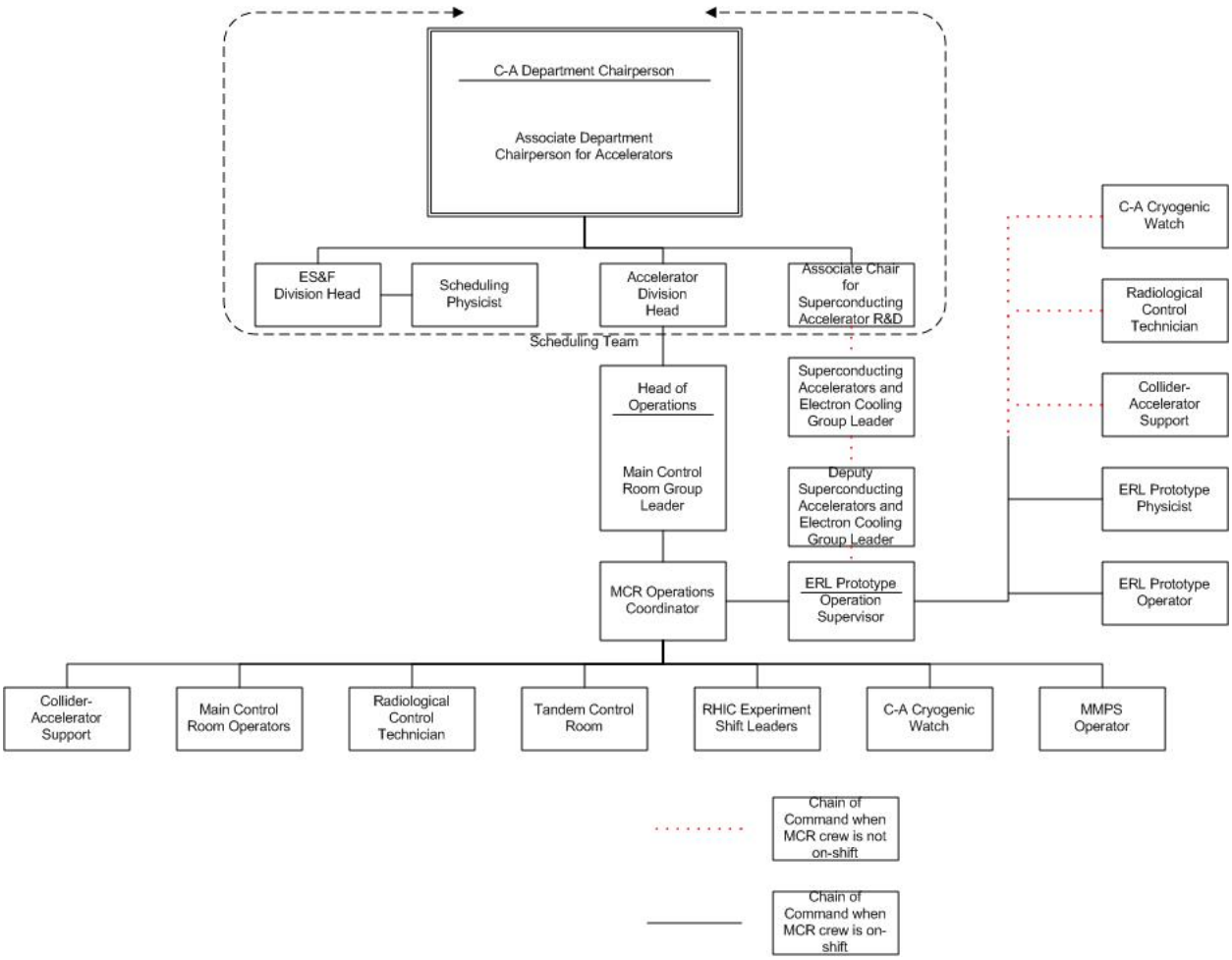

3.7. Administrative Controls for Routine Operation and Emergency Conditions

Administrative controls for routine operation and emergency conditions are the Radiological Protection Program, which provides a means of controlling the radiological exposure received by facility workers and restricts access to High and Very High Radiation Areas, and the Occupational Safety and Health Programs, which provide protection against:

- Non-ionizing radiation
- Hazardous or toxic materials
- Electrical energy

- Explosive gases and liquids
- Oxygen deficiency
- Slips and falls
- Rotating equipment
- Noise
- Thermal energy
- Cryogenic temperatures
- Protracted/irregular hours
- Natural hazards such as insects

Administrative controls, including procedures and training, provide for worker protection for the following aspects of work:

- To control access to the accelerator
- To protect workers from radiological hazards
- To ensure authorizations for work are employed
- To ensure work is reviewed for hazards and controls
- To ensure waste minimization and pollution prevention
- To provide for worker feedback
- To ensure the evacuation of workers outside as required in response to a fire alarm
- To ensure water samples are obtained in the event of a water spill
- To ensure abnormal events are reported to the C-AD management

3.8. Critical Operational Procedures to Prevent or Mitigate Accidents

C-AD specific procedures in the following areas are in place to reduce the potential for an emergency at Prototype ERL. The C-AD OPM has a search feature that may be used to easily find procedures on:

- Handling and disposing of hazardous waste
- Radioactive waste disposal
- Controlling liquid, airborne effluents
- Enhanced work planning
- Lockouts and tagouts
- Access control system testing, sweep and reset requirements
- Conduct of operations
- Control room activities
- Maintenance
- Personnel protective equipment
- Conduct of experiment procedures
- Safety review
- Self-assessment

3.8.1. Emergency Preparedness

Procedures were developed to help operators and workers respond in an emergency to reduce the potential for environmental impact and to take actions to mitigate the event. These procedures can be found in C-AD OPM Chapter 3.

3.8.2. Configuration Control

Procedures were developed to help managers and engineers review technical changes to C-AD drawings and to approve specifications for new equipment. These procedures can be found in C-AD OPM Chapter 13.

3.9. Administrative Controls

Administrative controls are found in C-AD OPM Chapter 1: Policies for Authorization, Training, Environment, Safety, Procedures, Minors, Visitors and C-AD OPM Chapter 2: Conduct of Operations, Control Room Activities, LOTO, Maintenance, Work Planning.

3.10. Calibration and Testing

The C-AD OPM contains many procedures for calibration and testing. Most apply to the calibration and maintenance of measurement and test equipment used to verify conformance to prescribed high accuracy technical requirements during inspection, testing and research. However some procedures relate to calibration of safety related equipment, such as:

- ODH Field Calibration Procedure

- Equipment Calibration Procedures for Chipmunks (Area Radiation Monitors)
- Access Control System Test Procedures

Safety-related procedures in the OPM require literal compliance since deviation could trigger consequences that result in breaking the safety envelope of the accelerator or result in injury. Exceptions to literal compliance require review and written approval by the appropriate safety committee. Only the Department Chair or the Associate Chair for ESSHQ authorizes removal of safety related procedures from the OPM when such procedures are deemed no longer applicable.

3.11. Radiological, Worker Safety and Environmental Programs

BNL uses several programs to enhance worker safety and create a safe workplace. These programs are described as follows.

Integrated Safety Management integrates safety and work. It protects worker, public and environment. It is based on the simple "Plan, Do, Check, Act" concept. The ISM has five Core Functions for performing work and seven Guiding Principles to manage work. The five Core Functions focus on work planning and control for each specific task and are:

1. Define the scope of work
2. Identify and analyze the hazards
3. Develop and implement hazard controls
4. Perform work safely within controls
5. Feedback and improvement

The seven Guiding Principles are core beliefs about managing workers and/or projects safely and are:

1. Line management responsibility for safety
2. Clear roles and responsibilities
3. Competence commensurate with responsibilities
4. Balanced priorities
5. Identification of safety standards and requirements
6. Hazard controls tailored to work being performed
7. Operations authorization

In addition to promoting these functions and principles, BNL adheres to health and safety requirements in two federal regulations: 10CFR851 Worker Safety and Health, and 10CFR835 Occupational Radiation Protection. The requirements in these regulations have been flowed down through BNL's hierarchy of documents and practices and into Prototype ERL's operating procedures and training programs.

BNL also uses four voluntary programs to help meet the requirements of regulations, and to help implement the functions and principles of ISM. These programs are:

- OHSAS 18001 Occupational Safety and Health Management Systems Specification
- ISO 14001 Environmental Management Systems Specification
- Manager Work Observation
- Human Performance

The OHSAS 18001 and ISO 14001 are third party certification programs. The certification process functions in the following manner. BNL selects a registrar to assess its ESH management systems. If the auditors determine that the occupational safety and health management system conforms to the international OHSAS 18001 standard, or the environmental management system conforms to the international ISO 14001 standard, then the certification body issues a certificate of registration.

Manager work observations are periodically performed by managers, safety specialists and workers. Manager work observation is a process that takes managers, safety specialists and workers at all levels into the work areas where they have some responsibility, to observe the work and to talk with each other about safety at the job site. Managers are expected to have brief discussions with employees regarding their specific tasks during a specific job. The objective is to improve safety by reducing risk and eliminating injury. The approach emphasizes positive, 2-way discussions in which participants learn and try to define safer ways to work.

Human performance, in its simplest form, is a series of behaviors executed to accomplish specific task objectives. Behavior is what people do and say—a means to an end. Behavior is an observable act that can be seen and heard. It can be measured. If it can be measured, it can be changed. In the accelerator business, the "end" is that set of outcomes manifested by the complex of accelerators—the safe, reliable, and efficient generation of particle beams. To improve accelerator performance, human performance must improve.

Because of the human element, people will make mistakes despite the best efforts. Studies have shown that humans make an error approximately once every 3000 times they perform the same task. Therefore, behavior and its causes are extremely valuable as the pointers to improvement efforts. Excellent human performance leads to optimum accelerator performance partially by protecting the accelerator and personnel from the consequences of human error. To do so at BNL, a set of error-prevention practices are in place to anticipate, prevent, catch, and recover from human error. These practices are aimed at double checking and triple checking before a task is performed, which has the effect of reducing human error rates by two or three orders of magnitude.

3.11.1. Examples of Pollution Prevention and Safety Improvement

Examples of pollution prevention and safety improvement at C-AD resulting from implementation of ISO 14001 and OHSAS 18001 include:

- Over 1,000,000 person-hours worked without a lost-work day injury
- Savings of about 700 MW-hours per week of operations by improving efficiency of the cryogenics plant for RHIC
- Removal and disposal of PCB electrical devices
- Water use reduced by 25,000 gallons per month

3.12. Records Management

The Prototype ERL follows C-AD OPM 13.4.1 for Records Management, which in turn follows BNL's SBMS. The Prototype ERL Records Custodian is the C-AD Records Custodian.

The applicable design specification, procurement document, operation procedure, inspection/test procedure, BNL management system, or SBMS Subject Area, or regulation specifies the records to be generated, supplied, or maintained by Prototype ERL. Examples of records to be maintained include:

- Fault Studies and Logbooks
- Engineering Change Notices
- Interlock Tests Records
- LOTO Records
- Work Permits
- Training Waivers
- Equipment Ready Checklists
- Safety Review Committee Records
- Maintenance Records
- Audit Results
- Critiques/Occurrence Reports
- Nonconformance Notices

These examples are not the exclusive records to be kept. The actual list is found in C-AD OPM Chapter 13.

3.13. Tests to be Conducted at Prototype ERL

This Prototype ERL R&D program has goals to demonstrate continuous wave (CW) operation with average beam current in the range of 0.1 – 1 ampere, combined with very high efficiency of energy recovery. The heart of the facility is a 5- cell 703.75 MHz superconducting RF linac. The Prototype ERL provides a test-bed for testing issues of transverse and longitudinal instabilities and diagnostics of intense CW e-beam. The Prototype ERL R&D program is pursued by C-AD as an important stepping-stone for increasing the luminosity of the Relativistic Heavy Ion Collider (RHIC).

Furthermore, the Prototype ERL R&D program extends toward a possibility of using a 10-20 GeV ERL for future electron-hadron/heavy-ion collider, eRHIC. The specific goals of the Prototype are to:

- Test the key components of the electron cooler
- Test the key components of high current ERL based solely on superconducting RF (SRF) technology:
    - 703.75 MHz SRF gun test with 500 mA
    - High current 5-cell SRF linac test (one turn - 500 mA, two turns - 1 A)
    - Test the beam current stability criteria for CW beam currents ~ 1 A
- Test the key components and scalability for future linac-ring collider eRHIC with
    - 10-25 GeV SRF ERL for eRHIC
    - SRF ERL based FEL-driver for high current polarized electron gun
- Test the attainable ranges of electron beam parameters in SRF ERL

3.14. Test Equipment Design Criteria and Components Having Safety Functions

Access Control System

The ACS for the Prototype ERL facility uses PLCs as the basis for decisions made by the system. In order to provide the required dual independent protection, the area served by the ACS has two independent PLCs (A and B divisions). Each division independently provides full protection. All the input/output devices (gate switches, critical devices, etc.) are redundantly monitored by both PLC systems. In addition, redundant monitoring of radiation level and ODH concerns was incorporated in the safety system.

The operator interface to the ACS utilizes touch screen displays (flat panels) on a command network that is connected through a firewall machine to the separate divisions.

The Department's 'classification' scheme for all radiological areas at C-AD defines the nature and extent of the access/beam control systems. The ACS prohibits access or limits the radiation dose when the radiological areas are accessed. Table 3.2.2.1 in the C-AD SAD delineates the access, enclosure and minimum system requirements, for each C-AD 'classification,' and takes into account the potential levels of radiation during normal operations, and the potential increases in radiation levels with abnormal conditions.[15]

There are five basic design criteria for the ACS that applies to all C-AD beam enclosures:

[15] C-AD Safety Assessment Document, http://www.agsrhichome.bnl.gov/AGS/Accel/SND/c-a_sad_and_ase.htm

- Either the radiation is disabled or the related access control area is secured
- Only wires, switches, relays, PLCs and RSC approved active fail-safe devices are used in the critical circuits of the system
- The system is designed to be fail-safe
- Redundant critical devices are used to disable the beam and redundant interlocks are used to secure the area if the dose equivalent rate can exceed 50 rem/h
- If a beam fails to be disabled as required by the state of its related access control area, then the beam is disabled upstream; that is, the access controls have backup or what is sometimes termed "reach-back"

The RSC reviews and approves changes to the ACS. They approve the critical devices and they establish the conditions that the ACS must monitor. For example, they approve electric current in beam elements, the position of moveable beam-components or the position of access gates. The RSC establishes the alarm level and interlock level for Chipmunk area radiation monitors that may be interfaced with the ACS.

During commissioning periods for new or modified accelerator facilities, radiation studies are conducted by the RSC to verify the adequacy of the shielding, access control and radiological area classification. These studies are termed "fault studies." That is, the calculated radiation levels are verified by direct radiation measurements, which confirm the appropriateness of the as-built ACS and as-built shielding, and the radiological area classifications inside and outside the facility.

Fire Detection System

Required fire protection design features are identified in the Fire Hazards Analysis (FHA). In many cases, various means are available to meet the general criteria required by the DOE Order 420.1. The following guidelines were used in selecting the appropriate protection methods:

- Wherever possible, passive protection methods are given preference over active systems; that is, passive fire rated or non-combustible construction, barriers and spatial separation are first reviewed for the ability to achieve the required level of protection before active suppression systems are considered
- Non-combustible materials are used wherever feasible to minimize the hazard
- Active suppression systems are provided where required by the referenced documents
- Wherever possible, wet pipe sprinklers are used, dry pipe for potentially freezing areas, and deluge for high challenge systems
- Alarm and detection systems are provided where required by the referenced documents; type of detection is based on the type of fire expected, and the need for sensitivity or fast response, to provide for rapid manual response or effective process shutdown to minimize damage
- Automatic Smoke Detection: Computer equipment rooms or areas that exceed the $250,000 limit established by DOE require smoke detection
- Automatic Sprinkler Protection: Computer equipment rooms or areas that exceed the $1,000,000 limit require sprinkler protection

- Fire Barriers: Where building Maximum Possible Fire Loss (MPFL) values exceed $50 M, buildings are subdivided into fire areas with an MPFL value less than $50 M; where this approach is not operationally feasible, redundant fire protection systems are provided
- For facilities where DOE orders or referenced code requirements cannot be met, the need to develop equivalent protection is identified

The FHA for Building 912, which was performed by outside consultants while the Prototype ERL was constructed in the NEBA portion of the building, indicated sprinklers would be required for some Prototype ERL rooms and some proposed Prototype ERL equipment.[16] The sprinkler feed would be via a 4-inch feed already in the NEBA Building 912 area.

The FHA consultant defined the approximate total value of the equipment in the ERL area as $5 M since the experiment uses a high value klystron gun that operates at 20 amps and 100,000 volts. Associated with the klystron gun is a power supply that is also high value. In 2007 before the Prototype ERL was completed, the FHA consultant indicated that parts of the Prototype ERL were to be protected with smoke detection; and a high-sensitivity smoke detection system was provided at the main ceiling above the Prototype ERL accelerator enclosure. The consultant indicated the control room area just outside the NEBA Building needed to be protected with automatic sprinklers and smoke detection.

[16] R. Wheeler, Hughes Associates, Inc., 3610 Commerce Drive, Suite 817, Baltimore, MD 21227-1652

Based on the FHA by the consultant and on a room-by-room analyses of Prototype ERL with the BNL Fire Protection Engineer and Prototype ERL project management, the following fire detection and protection features for Prototype ERL were implemented:

- The smoke detectors in the high-voltage power-supply-room interlock power off if smoke is detected
- Transformers have over-current protection
- The two large 100 kV transformers just outside the power-supply room are filled with Envirotemp FR3 Fluid (fire-point is 360 ^{o}C)
- A total of 800 gallons of seed-based oil is used and it is biodegradable
- Sprinklers are placed above the two large 100 kV transformers
- The high-sensitivity smoke detector near the ceiling of NEBA Building 912 interlocks the power to the 100 kV transformers off upon detecting smoke
- The first-floor ERL chiller area room has sprinklers and smoke detectors turn off power to the 100 kV transformers
- The first-floor laser room has sprinklers and smoke detectors that transmit alarm signals
- The first-floor klystron room has smoke detectors turn off power turn off power to the 100 kV transformers
- The second floor of high-rise has sprinklers and smoke detectors turn off power turn off power to the 100 kV transformers
- The pump room has smoke detectors that transmit alarm signals
- The Prototype ERL control room has sprinklers and smoke detectors
- The fire-alarm annunciation at Prototype ERL turns off power to the 100 kV transformers

- A procedure for 'manual power turn-off in the event of a fire', was written for the Prototype ERL area and trained on by the Collider-Accelerator Support Group
- A combustibles-control-plan was written for the accelerator ring enclosure and trained on by the Prototype ERL operators
- The accelerator ring enclosure has smoke detectors

A drawing showing the location of fire protection and fire detection devices is shown in Figure 3.14.1.a.

Figure 3.14.1.a Prototype ERL Fire Protection System

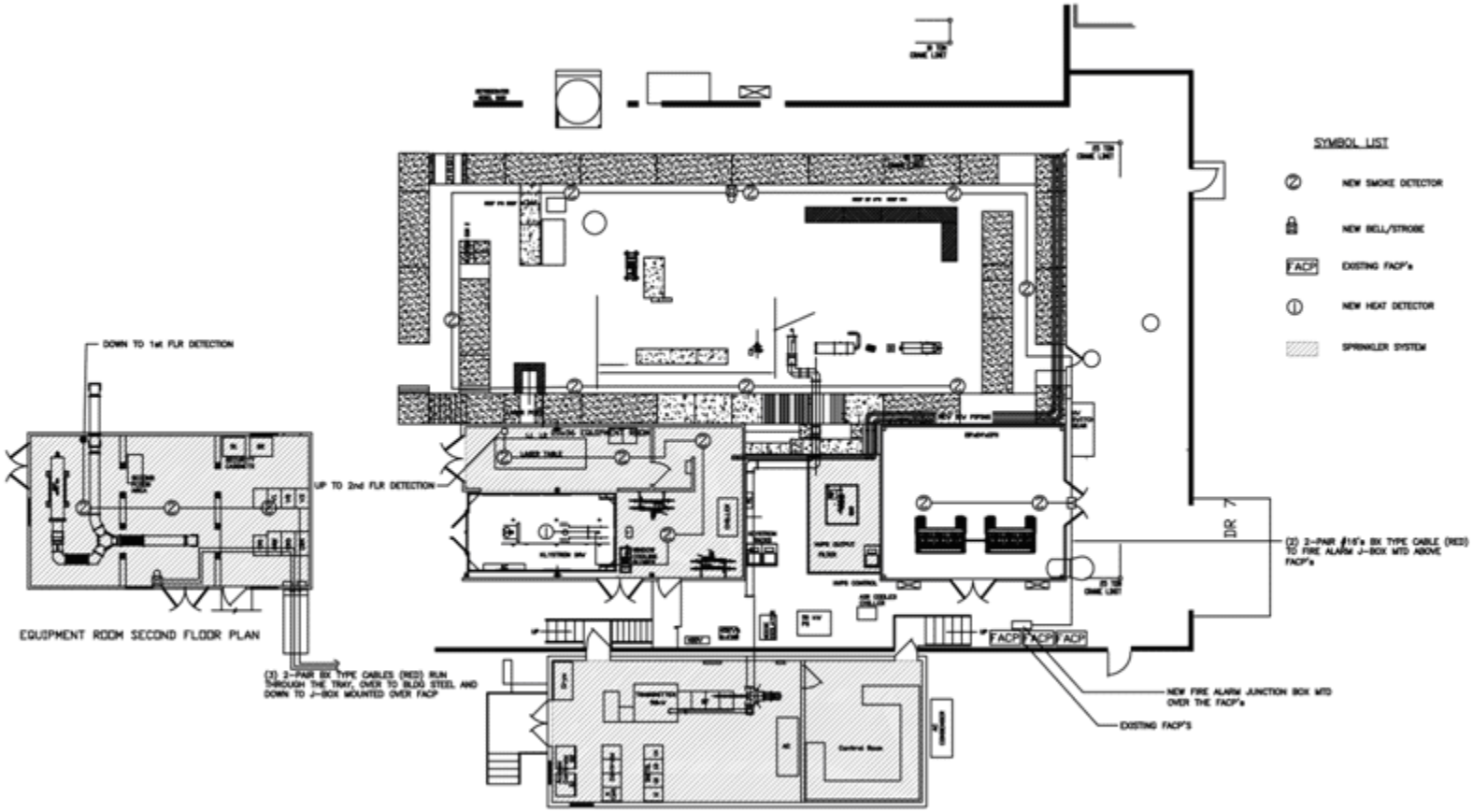

Shielding

The policy upon which Prototype ERL shielding was designed can be found in Appendix 3, C-AD Shielding Policy. By adhering to the principles of this policy, Prototype ERL workers will not receive a planned exposure in excess of 500 mrem per year, or a fault exposure greater than 20 mrem. Prior experience at C-AD has shown that maintaining this policy for shield design results in workers actually receiving 10% or less of the planned exposure. This is largely due to work planning, conservative shielding design calculations, an active ALARA program and the fact that shield blocks come in standard sizes and thicker than calculated thickness is used in practice.

The shielding is in accord with the design criteria in 10CFR835 dated June 8, 2007. In addition to meeting the design criteria, a comparison of the pre-June 8, 2007 10CFR835 quality factors and the new 10CFR835 radiation weighting factors for neutrons is shown in the table below. In Chapter 4 of this document, the analysis shows the total dose equivalent outside the shield is dominated by photons, with only a few % attributed to neutrons. A factor of 1.5 to 2 higher in neutron dose equivalent is calculated using the radiation weighting factor, while total calculated dose equivalent from the radiation field near the Prototype ERL remains the same.

Neutron Energy (MeV)	**Weighting Factor, W_R**	**Quality Factor, Q**
1	20.7	11
2	17.3	9.5
2.5	16	9
3	15	8.7
4	13.3	8.4
5	12	8
6	11	7.5
7	10.3	7

The general layouts of the important shields are shown in Figures 3.14.1b and 3.14.1c. Neutrons and photons are the predominant radiation outside the ring enclosure, and concrete is the predominant shield material. Bremsstrahlung radiation is the predominant ionizing-radiation-hazard associated with the klystron high-voltage tube, and the best shield for these lower energy photons is lead.

Penetrations and seams in the shielding will be studied during initial operations since these are the hardest features to predict accurately in terms of calculated radiation dose rates. Thus, the shielding in the layouts is "planned" as shown here. Based on measurements, anywhere unusual shielding features conspire to elevate radiation levels above the plan, then that shield will be improved.

Figure 3.14.1.b Prototype ERL Klystron Lead Shield Layout

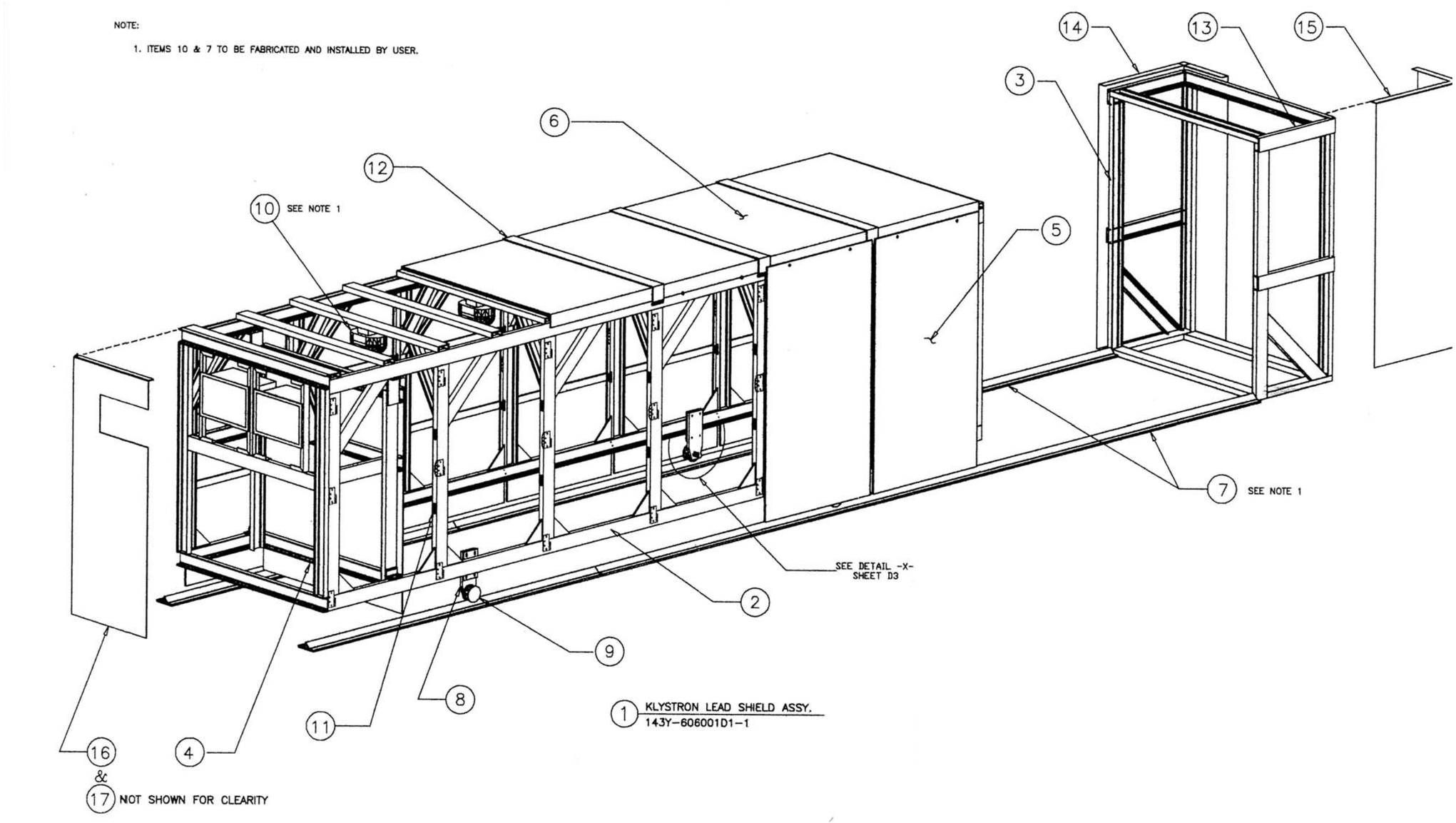

Figure 3.14.1.c Prototype ERL General Shield Layout

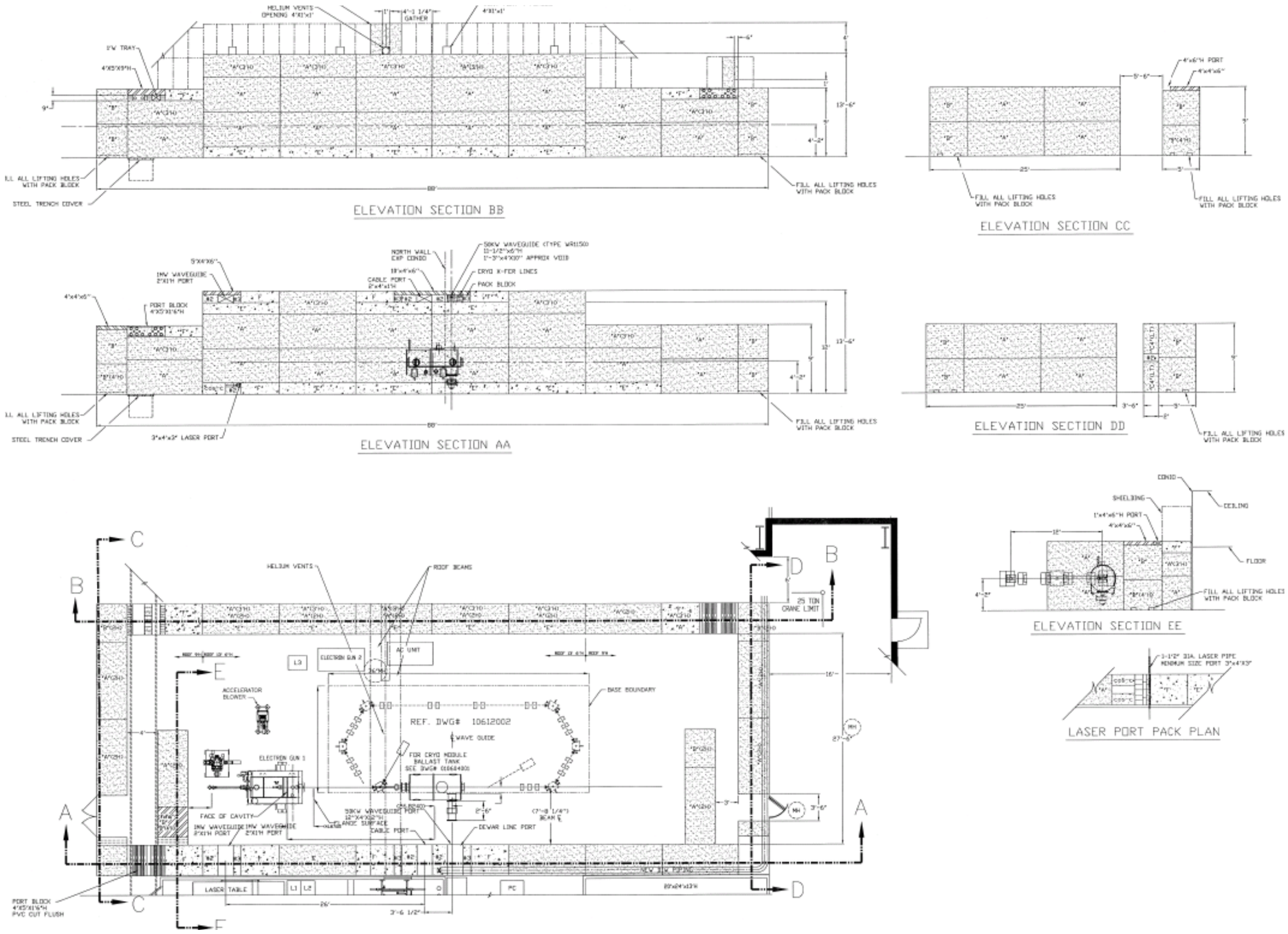

4.Safety Analysis

The level of detail included was correlated with the size, complexity, hazards, potential impacts and risks associated with Prototype ERL facility operation. The hazards analysis is comprehensive, and explored the full range of consequences each hazard could have on workers, the public, and the environment. It was based on sound assumptions so that effort would be focused on analysis of credible and realistic consequences. As allowed by DOE G 420.2-1[17], this SAD references a survey of the hazards present at the accelerator facility, including prompt radiation, radioactive materials, non-ionizing radiation, hazardous materials, and sources of energy. The hazard evaluation information in the SAD includes credible initiating events, the assumptions used in estimating the consequences, and controls required to reduce hazards and associated risk to acceptable levels. Identified controls were evaluated to determine if any were credited controls.

A credited control is one determined through hazard evaluation to be essential for safe operation directly related to the protection of personnel or the environment. The credited controls are a limited subset of the total controls employed for overall facility operation. Credited controls were assigned a higher degree of operational assurance than other controls. For example if a system, equipment or practice actively or passively protects workers and/or staff from a significant hazard, then it has formal administrative controls or limits for operation. These credited controls are treated specially and considered for incorporation in the ASE, appropriate procedures and/or quality assurance.

[17] Accelerator Facility Safety Implementation Guide for DOE O 420.2B, Safety Of Accelerator Facilities

Implicit in the above discussion is that analysis of hazards, consequences, and the types and reliability of controls, involved professional judgment. This judgment was based on sound technical and/or scientific principles using accepted methods for hazard analysis suitable for the types and magnitudes of hazards present.

4.1. Identification of Potentially Hazardous Conditions from Radiation Associated With Operation

At ERL, the primary electron beam is only present when the machine is operating. Before interacting at a particular location, the accelerated beam is essentially mono-energetic, consisting of only electrons. If the electrons stop in the accelerator equipment, beam stop or shielding, then electromagnetic cascades and Bremsstrahlung radiation can occur. For lower energy electrons, 25 MeV or less, Bremsstrahlung radiation contributes substantially to the energy loss by electrons in matter. Bremsstrahlung radiation is emitted by a decelerating charged particle or by a charged particle changing direction. Bremsstrahlung is German for braking radiation, and in particular, the term is used for photon radiation emitted by electron decelerations when electrons pass through the electric field of atomic nuclei. This produces photon radiation distributed over a wide range of energies.

If electrons are accelerated in a magnetic field, they can also produce photons and this is termed synchrotron radiation. Synchrotron radiation from this accelerator is produced when the electron beam circulates in the magnetic field of the ring. This synchrotron radiation is low energy and is attenuated by the shielding used for Bremsstrahlung.

When the machine is operating, the radiation outside the shielding is dominated by indirectly ionizing radiation such as photons and neutrons that penetrate the shielding. Neutrons are produced from the higher-energy Bremsstrahlung photons that interact with nuclei that make up the concrete shield. Because these are lower-energy Bremsstrahlung photons, at least in terms of causing nuclear reactions, the dominant neutron-producing mechanism is the giant nuclear resonance. Among the best-known example is the giant electric dipole (E1) resonance, which is concentrated in the energy region of 10 to 30 MeV for most, if not all, nuclei. In the E1 resonance, all protons and all neutrons in the nucleus oscillate with opposite phase, which produces a time-varying electric dipole moment, which acts as an effective antenna for absorbing or radiating gamma rays. The E1 resonance is the best known of the nuclear giant resonances. It is the dominant feature in reactions initiated by gamma rays. The absorption of a gamma ray induces the giant E1 oscillation, which breaks up, in this case, by emitting neutrons. This resonance is also the dominant feature in the reverse process, in which gamma rays are produced by proton and neutron bombardments of nuclei.[18]

The neutron spectrum from the E1 resonance process is often compared to a fission spectrum and is well described by a Maxwellian distribution. Shielding is relatively straightforward. The neutron-dose-equivalent tenth-value-layer for ordinary and heavy concrete is about 100 g cm^{-2} for this neutron spectrum.[19]

[18] http://www.answers.com/topic/giant-nuclear-resonance?cat=technology, January 2008.
[19] NCRP 144, Radiation Protection for Particle Accelerator Facilities, December 2003.

Neutrons can induce radioactivity in the Prototype ERL machine components, cooling water and nearby equipment. This neutron activation is expected to be insignificant at ERL because the electron energies into the beam dump are well below most activation thresholds. Residual radiation from the dump will be verified by radiation surveys near the beam dump after the machine is turned off, and by cooling water sampling and analysis. Radiation controls are in place as required during entry into the Prototype ERL following machine shutdown for inspection, maintenance, modification or repair activities. Because of the insignificant activation at ERL no contamination issues are expected.

The principal radiation hazards at Prototype ERL derive from the primary electron beam flux and duty-cycle of the machine. Listed in order of relative importance to health, these hazards include:

- Potential inadvertent exposure of workers to primary electron beam or RF induced x-rays from the electron gun or 5-cell accelerating cavities

  NOTE: The access controls system and the enclosed beam pipe prevent exposure of personnel to this beam. The probability of unsafe failure of the access controls system that would allow an overexposure from primary beam or Bremsstrahlung is so low[20] that this hazard is not credible and further analysis is not performed.

- Exposure to photon and neutron radiation near labyrinths and penetrations
- Exposure to photon and neutron radiation that penetrates through the shielding
- Exposure to skyshine radiation

[20] D. Beavis, Failures in the PLC Based Radiation Safety Systems, October 31, 2000; D. Beavis, Frequency of Interlock Testing, November 6, 2000; D. Beavis, Estimation of Time to Loss of Protection-The D-Downstream Gate, November 13, 2000.

NOTE: Escaping neutrons and gammas through thin parts of the shield or roof causes skyshine radiation; that is, the escaping radiation interacts with atoms in the air column above the accelerator and some of the resulting lower-energy radiation is scattered downward from these interactions. Skyshine radiation may extend many tens of meters from this accelerator. The Prototype ERL roof shields are inaccessible, via administrative access controls, during operations. The concern here are the dose rates from skyshine in the Prototype ERL Control Room, B966 and B940 due to the expected occupancy of these areas relative to other areas surrounding ERL. However, this source is expected to be insignificant during routine beam operations. This will be confirmed during routine radiation surveys and by environmental thermo-luminescent dosimeters (TLDs) placed around the facility.

- Exposure to activated air
- Exposure to potential residual radiation induced in machine components
- Exposure to or inadvertent release of activated cooling water to the environment

The ERL is an experimental machine that may undergo changes in operations as more is learned about its operating characteristics. If any of these changes involve a potential change in the radiation hazards, appropriate work planning and safety-committee reviews will take place to ensure that the BNL Radiological Control Manual requirements are met and ASE limits continue to be satisfied. If the ASE limits need to be revised to allow more flexibility in research/operations, the proposed ASE changes will be submitted to DOE for approval before the changes occur.

Estimates of the expected dose rates from Prototype ERL operations are described below. During commissioning, radiation surveys will be conducted to validate these estimates. The expectation is that actual dose rates will be below these computed does rates. If necessary, the shielding will be appropriately modified to ensure that routine and faulted doses and dose rates will be acceptable for full power operation of Prototype ERL.

Table 4.1 Parameters of the Prototype ERL in Building 912

	High charge mode	Low charge mode
Injection energy, MeV	3.5	3.5
Maximum beam energy, MeV	25	25
Average beam current, mA	100-200	10-200
Bunch rep-rate, MHz	9.4	9.4-700
Charge per bunch, nC	10 or more	~0.3 -1
Efficiency of current recovery	>99.95%	>99.95%

The proposed ASE limitations for the Prototype ERL are summarized below. It is noted that rated power sources for Prototype ERL, 1 MW for the gun and 50 kW for the 5-cell cavity, were increased 20% to estimate dose and dose rates. Prototype ERL power sources are not designed to produce this increased power; rather, the shielding was analyzed at this increased power level. Thus, a safety margin of 1.2 has been included in the dose and dose rate calculations in this SAD:

- Electron energy limit of 3.5 MeV for the superconducting RF gun
- The power source of the superconducting gun is limited to delivering 1.2 MW of power to the gun
- Electron energy limit of 25 MeV for the ERL ring

- Electron beam power shall not exceed the equivalent of 10 MW of instantaneous power for the electron beam in the Prototype ERL ring
- The power source for the five-cell cavity will be limited to delivering a maximum of 60 kW of power to the cavity
- A beam power of 1.2 MW for electron beam striking the beam dump

4.1.1. Unshielded Source Radiation Levels

Based on average continuous beam current of 200 mA, the average beam power is 0.7 MW at 3.5 MeV and 5 MW at 25 MeV. For the purpose of setting limits in the ASE, 1.2 MW at 3.5 MeV and 10 MW at 25 MeV were chosen as the maximum beam powers.

Continuous beam loss in the electron ring is limited via the physics of the Prototype ERL. If beam in the ring is totally intercepted, continuous beam loss in the ring vanishes since no energy is recovered to accelerate the next pulse in the CW train of pulses coming from the electron gun. This self-limiting effect is one of the peculiarities of an Prototype ERL ring. The maximum continuous beam loss is limited by the power that can be restored by the 5-cell cavity power supply, which is 50 kW. As noted previously, for dose and dose rates calculations, a factor of 1.2 or 60 kW is assumed to be the restoring power.

On the way to the dump, it is not expected that the entire 3.5 MeV beam at average current can be lost at any single point for an extended period of time. In radiation protection it is a conservative practice to assume that all electron beams produce thick-target Bremsstrahlung in

high-Z material, regardless of the actual thickness or type of target. Thick target curves (see figure that follows)[21] for Bremsstrahlung radiation from NCRP 144 Figure 3.5 show that a 3.5 MeV beam at 1.2 MW can produce instantaneous absorbed dose rates of $5x10^7$ rad/h at 1 meter in the forward direction and $8x10^6$ rad/h at 1 meter in the transverse direction. The 3.5 MeV beam has insufficient energy to cause a neutron dose contribution via the photon-giant-nuclear-resonance process. [22]

Routine loss of a small fraction of the 3.5 MeV beam is expected. In normal operations the losses of the 3.5 MeV beam will be dominated by loss at the collimator. One micro-amp of beam is anticipated to be routinely lost on the collimator. One micro-amp continuous 3.5 MeV beam loss, which is a beam power of 0.0035 kW, equates to a forward absorbed dose rate of 140 rad/h and a transverse absorbed dose rate of 28 rad/h at 1 meter with no shielding. The collimator is located in the transport between the gun and the first chicane.

The 3.5 MeV beam is not intended to be transported into the 25 MeV transport ring after the first bend after the superconducting RF cavity. For radiation safety purposes, interlocks prevent the transport of the 3.5 MeV beam past this magnet.

The electron gun beam power will eventually be transported to the beam dump. From Table 4.1, the average beam current is 200 milliamps. Two-hundred milliamps of continuous 3.5 MeV beam loss on the dump, which is a beam power of 700 kW, equates to a forward absorbed

[21] NCRP Report No. 144, Radiation Protection for Particle Accelerator Facilities, Figure 3.5
[22] Ibid, Figure 3.12

dose rate of 2.8×10^7 rad/h and a transverse absorbed dose rate of 5.6×10^6 rad/h at 1 meter with no shielding.

The high energy electron beam, 25 MeV, is separated from the low energy 3.5 MeV beam in the chicanes before and after the SRF cavity. Conservatively assuming a 60 kW maximum sustainable loss, which is the limit of the SRF power supply, NCRP 144 Figure 3.5 shows Bremsstrahlung dose rates of 4×10^7 rad/h in the forward direction at 1 meter with no shielding, and 5×10^5 rad/h in the transverse direction. Since this energy Bremsstrahlung also produces giant resonance neutrons, the 25 MeV beam generates the highest neutron yield.

Swanson[23] (see figure that follows) has illustrated the broad features of the radiation field due to the unshielded initial interactions of electrons. The figure shows the radiation dose is heavily dominated by the Bremsstrahlung contribution. However, this figure is useful for making crude estimates of the resultant neutron radiation field. For a 60 kW continuous loss of 25 MeV electron beam, neutron dose equivalents range between 6×10^3 and 1×10^5 rem/h at 1 meter, which are several orders of magnitude less than the dose equivalent from Bremsstrahlung. At C-AD, a value of 430 rem/kW-h at 1 meter was used in the RSC Chair's analysis for electron energy of 25 MeV (i.e., 3×10^4 rem/h at 60 kW).[24]

---

[23] W. P. Swanson, Radiological Safety Aspects Of The Operation Of Electron Linear Accelerators, Technical Report No. 188, International Atomic Energy Agency (IAEA), Vienna, 1979. Adapted in Radiation Physics For Personnel And Environmental Protection, Fermilab Report Tm-1834, Revision 7, April 2004, J. Donald Cossairt, Fermi National Accelerator Laboratory.

[24] D. Beavis, Simple Estimate of ERL Radiation, August 1, 2006.

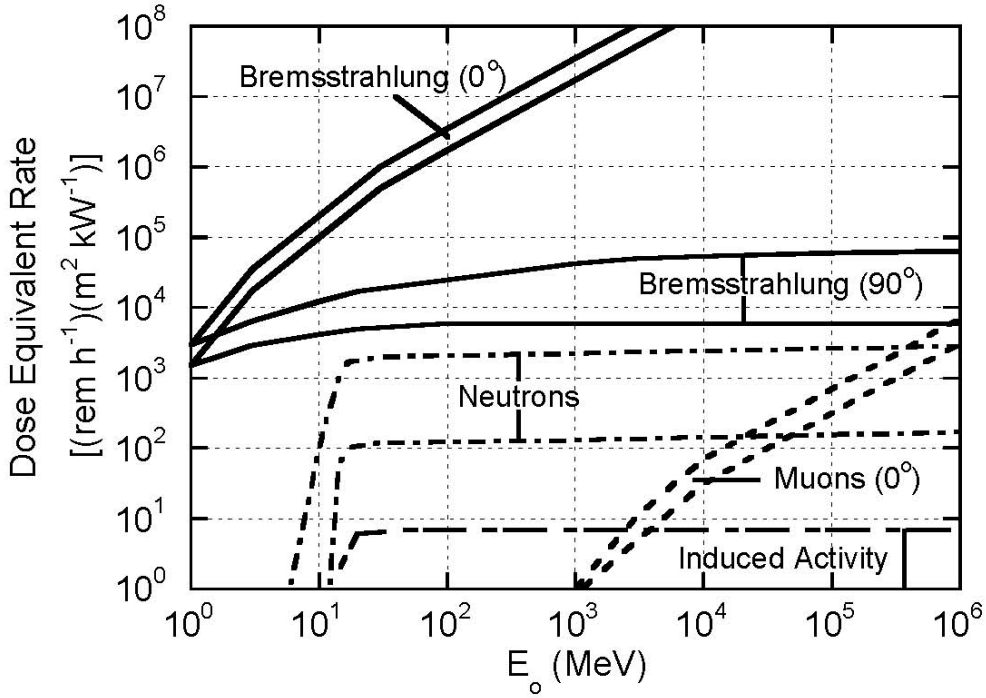

Fig. 3.10 Dose-equivalent rates per unit primary beam power at one meter produced by various types of "secondary" radiations from a high-Z target as a function of primary beam energy, if no shielding were present (qualitative). The width of the bands suggests the degree of variation found, depending on such factors as target material and thickness. The angles at which the various processes are most important are indicated. [Adapted from (Sw79a).]

The unshielded dose rate values represent a starting point for appropriately shielding the facility in order to adhere to the C-AD Shielding Policy. Section 4.1.2, which is the next section, contains detailed results of calculations that were performed for the shielded facility.

4.1.2. Maximum Credible Dose Rates on Outside Surface of 48-Inch Concrete Shield

Beam loss in the ring is limited for machine protection by beam current transformers used in a differential mode, and is anticipated being low because high loss would cause major equipment damage, quickly terminating operation of the accelerator. On the other hand, for this analysis the machine protection system is not credited in reducing dose from a beam loss event.

The maximum sustained beam loss is 1.2 MW for 3.5 MeV injection electrons and 60 kW in the 25 MeV ring. Credible routine losses are expected to be 1 W at beam injection and 50 W for the 25 MeV beam. Additional heavy concrete or iron shielding for the electron ring in the cave is present to reduce the Bremsstrahlung dose rate in the forward direction. This added shielding reduces the 0-degree Bremsstrahlung dose rates by a factor of at least 0.005. Including this added shielding, the following estimates for gamma and neutron dose rates at the outside surface of the Prototype ERL cave shielding are shown in Table 4.1.2.a.[25,26] Details of the calculations are given in Appendix 1.

[25] D. Beavis, Simple Estimate of ERL Radiation, August 1, 2006
[26] D. Beavis, The Effectiveness of a Two-Foot Thick Inner Heavy Concrete Wall, December 11, 2006

Table 4.1.2.a Dose Outside of Prototype ERL Cave for 3.5 and 25 MeV Electrons

Condition	Instantaneous dose rate from maximum beam loss[a]	Dose rate from sustainable loss[b]	Dose from sustainable loss assuming interlock occurs[d]
3.5MeV@ 0 degrees, γ	88,000 mrad/h	0.073 mrad/h	0.0002 mrad
3.5MeV@ 90 degrees, γ	18,000 mrad/h	0.015 mrad/h	0.00004 mrad
25 MeV@ 0 degrees, γ	65,000 mrad/h[c]	4000 mrad/h[c]	10 mrad[c]
25 MeV @ 90 degrees, γ	13,000 mrad/h	800 mrad/h	2.0 mrad
25 MeV neutrons	120 mrem/h	6.0 mrem/h	0.015 mrem

[a] The maximum instantaneous beam loss is 1.2 MW at 3.5 MeV and 10 MW at 25 MeV, a loss which would terminate after a small fraction of a second.
[b] The sustainable loss is 1 W for 3.5 MeV and 60 kW for 25 MeV electrons is assumed.
[c] The forward direction gamma dose rates have been reduced by a factor of 0.005 by the addition of 2-feet of heavy concrete in the electron ring.
[d] As with all C-AD interlocking area-dose-rate monitors (named 'Chipmunks'), a 9-second delay from sensing the trip point dose rate to stopping of beam is conservatively assumed in SAD analyses.

Routine surveys during commissioning will ensure that radiation area postings reflect the actual dose rates during operations.

The electron gun and the 5-cell accelerating cavity will generate x-rays from field emission of wall-surface electrons. They are assumed to generate x-ray dose rates similar to the RHIC RF cavities. A conservative dose rate of 2000 rad/h at 1 meter is assumed for the maximum sustainable loss during conditioning of the cavity and 80 rad/h at 1 meter is assumed for routine losses. Comparison of this source with the dose rates from the routine electron beam loss shows that the x-ray dose rates at the outside surface of the Prototype ERL cave shielding are insignificant.

The Monte Carlo Neutron Photon Transport Computer Code (MCNPX) was run to estimate the dose rates from skyshine in normally occupied areas during ERL operations. The results are summarized below for the assumed maximum sustainable loss of 60 kW, and for a more realistic but conservative loss of 50 W assuming that Chipmunks interlock the beam at a set point determined by the RSC. It is noted that Prototype ERL will be run only about 25% of a year. Using this occupancy with the expected sustainable loss of 50 W, the annual dose to an individual in the Prototype ERL control room will be 41 mrem.

Table 4.1.2.b Skyshine Dose Rate Estimates From 25 MeV Beam Loss[27]

Occupied Location	Maximum sustainable loss (60 kW of 25 MeV electron beam)	Conservative sustainable loss (50 W of 25 MeV electron beam)	Maximum dose with 60 kW loss assuming Chipmunk Trips Beam
ERL Control Room	98 mrem/h	0.082 mrem/h	0.25 mrem
Building 966	26 mrem/h	0.022 mrem/h	0.07 mrem
Building 940	4.0 mrem/h	0.0033 mrem/h	0.01 mrem

The Klystron room shielding was based on the operation of a similar Klystron at Los Alamos, which had a 1/8 inch lead "garage" over it. The Prototype ERL Klystron operates at an upper voltage of ~92 kV. For the ~200 kV upper energy limit of the x-rays, the 1/8 inch of lead was computed[28] to be equivalent to 1-inch of steel at operating voltage and ~2.1 inches of steel at 150 kV. Based on this calculation and radiation measurements made at the manufacturer's facility, the Klystron room is a steel box with a wall thickness of 2 inches of steel. There are penetrations in the back wall for utilities and the wave guide. These penetrations are shadowed by steel and lead to prevent x-rays from directly shining out.

Dose estimates for the penetrations use a combination of simple source terms and estimates of the attenuation of the radiation as it propagates through the opening.[29] The estimates are intended to be order of magnitude estimates. Conservative assumptions are usually used so that the estimates represent upper limits for the potential dose rates. The low-intensity fault studies for the RF-gun, five-cell cavity, and transport of the low energy and high energy

[27] Email from K. Yip to R. Karol dated January 29, 2008, Skyshine
[28] MicroShield Version 7.02, Grove Software Incorporated
[29] D. Beavis, Dose Rate Estimates for ERL Penetrations, March 26, 2008.

electron beams will be used to verify the source terms and radiation transport through the shielding and penetrations.

There are approximately 20 penetrations through the Prototype ERL external shielding. Two of the major penetrations are used for personnel and equipment access. Several of the penetrations are buss blocks containing several dozen small penetrations for access of utilities. Other penetrations are intended for electrical cables, cryogens, gas exhaust, laser beam, etc.

The ERL enclosure has side walls composed of between four and eight feet of light concrete. The thin sections of wall are shadowed from the potential sources with inner shield walls located appropriately. The entire facility has a single layer of light concrete roof beams four feet thick, except for a transition region where the roof is two layers of roof beams. This transition region is where the 13 foot ceiling height in the center is reduced to 9 feet at both ends.

The radiation sources are predominately x-rays and gamma rays. The 25 MeV electron beam is capable of generating neutrons. Only in conditions where substantial high-Z shielding materials have been used or where it takes many bounces for radiation to get through a penetration is it possible for the neutron dose rates to dominate the x-ray dose rates.

The shielding was evaluated for two types of exposures, normal and fault conditions. Dose rates during fault conditions are typically many orders of magnitude larger than that of normal operating conditions. The areas around the penetrations are typically not occupied and they are posted for localized elevated dose rates. The main focus of the penetration analysis is

the issue of dose to personnel during a faulted beam condition, as opposed to dose from normal operations.

During operations, all areas near the Prototype ERL shielding are posted at least as a Radiation Area. Large dose rates caused by fault conditions are detected and controlled by area radiation monitors (Chipmunks) distributed around the area as defined by the RSC. These devices are coupled with the interlock system and terminate the radiation in 1 to 9 seconds depending on the level of radiation at the detector. A delay of 9 seconds was assumed for the estimate of dose from fault conditions.

The four sources of radiation in the area are the injector, beam losses of the 3.5 MeV electron beam, the five-cell cavity, and beam losses of the 25 MeV electron beam. The source terms used are conservative. As already noted, the fault studies at low intensity will provide a check on the source terms and the effectiveness of the installed shielding.

The injector and the five-cell cavity can generate copious x-rays. No modeling has been conducted for the injector and the five-cell cavity in terms of the x-ray generation, but experience from other similar systems at C-AD can be used for guidance. The conditioning of these RF cavities will cause the largest x-ray generation. The superconducting five-cell cavity is expected to be able to absorb 100 to 1000 watts from field emission electrons crashing into the walls of the cavity before boiling too much helium and becoming normal. The voltage difference that field emission electrons cross is typically less than the gradient of a single cavity, 5 MV. Only a few electrons accelerate across several cavities. It is assumed that all the electrons are at 3.5 MeV with a maximum conditioning loss of 250 W. It is expected that the routine loss is less than 10

W for the five cell cavities. It was assumed that the injector has this same characteristic. Previous methods[30] are used to estimate the 90-degree radiation, using thick target formulas. The calculated unshielded dose rates for conditioning are 2000 rem/h at 1 meter, and for normal operations, 80 rem/h at 1 meter. Thus, the shielding used to protect against normal electron beam losses is adequate to protect against this source too.

The dose from a 25 MeV electron beam loss in the near zero degree direction has been estimated to be 10,800 rad/hr at 3 meters with 2 feet of heavy concrete between the source and the point of interest with a 60 kW loss[31]. This value was used in the calculations for locations where an inner shield wall acts as a shadow for the 25 MeV beam losses in the ring.

The maximum sustainable beam loss that the 5 cell cavity can support is 60 kW, which is limited by the RF power supply. According to the machine designers, the realistic maximum local loss that can occur is between 10 and 100 W before the machine is damaged and shuts down. The ERL has machine protection devices to limit losses in order to avoid equipment damage. Thus, the 60 kW loss assumed for shielding calculations (Appendix 1) is considered conservative. Routine losses are expected to be less than 10 W.

The 3.5 MeV beam has a power limit of 1.2 MW. This power can be deposited in the water cooled beam dump, which has local shielding. Again it is not expected that the machine can survive a large beam loss at any location, except at the beam dump. The beam dump is shielded sufficiently and was not considered for the penetration evaluations.

---

[30] D. Beavis, "Simple Estimates of ERL Radiation", August 9, 2008.
[31] D. Beavis, "The Effectiveness of a Two-Foot Thick Inner Concrete Wall", December 11, 2006, Figure 1.

An arbitrary 1 kW of a 3.5 MeV electron beam was assumed for the penetration analysis. A routine loss of 10 W or less is expected. Any routine loss higher than this, as observed during daily radiation surveys, will be reviewed by the RSC for the possible addition of local shielding.

The following table (Table 4.1.2.c) summarizes the calculations in Appendix 1 for each penetration for gamma rays and neutrons. The maximum neutrons can come from a different source location than the gamma rays. In all cases the maximum gamma dose rates are from the 25 MeV electron beam losses.

Table 4.1.2.c Estimated Maximum Dose Rates and Fault Dose to Worker Near Penetrations

Penetration	Maximum Gamma Dose Rate (rem/h)	Maximum Neutron Dose Rate (rem/h)	Maximum Dose with Interlock (mrem)[8]
Laser port	2.5	0.024	6.3
1 MW Waveguide	50	0.48	130
Cryo Ports (5)	10 [1]	2.4 [1]	31
North Gate	0.31	2.2	6.3
North Labyrinth Buss Block	4.8 [2]	0.12	12
South Gate	59 [3]	0.19	150
Port in South Labyrinth (2)	72 [4]	0.72	180
West Trench	7.2	0.12	18
East Trench	2.4	1.9	11
South labyrinth buss block	0.12	0.36	1.2
ODH Vent	12 [5]	4.8 [5]	4.2
Lifting Fixture holes (4)	1.7 [6]	0.010 [6]	4.3
50 kW waveguide	34 [7]	1.2 [7]	88

[1] Assumes that steel has been used to reduce the gamma rays by a factor of 10.
[2] This is directly outside the buss block. This may be in a fenced area.
[3] A shield block in the ring center would substantially reduce this dose rate, if desired.
[4] At port exit which may be in a fenced area. Port may be packed in the future. This value is for the port with the highest dose rate of the two ports.
[5] This is on the roof and is not allowed to have personnel access during operations.
[6] Evaluated at the edge of the shielding and not on the roof.
[7] The penetrations for the cables ports, water pipes and the 50 kW waveguide are computed in a separate note[32]. The dose rates presented here are at a height of 12 feet above the floor.
[8] Barriers are used to prevent access to penetrations greater than 20 mrem fault dose. Shielding will be added and barriers removed based on fault studies in order to reduce the fault dose below 20 mrem.

All the dose rates in the Table 4.1.1.c are sufficiently low such that with appropriately placed Chipmunk monitors to terminate the beam on large beam losses, the exposure to personnel is less than 10 mrem from a fault. Where fault dose rate exceeds 50 rem/h at a penetration opening, dual failsafe Chipmunks must be used. However, several of the larger dose rates can be further reduced and fault studies will allow evaluation of the need for added shielding by the RSC.

[32] D. Beavis, "Estimate of the Radiation Exiting Penetrations for the ERL 50 kW Waveguide, Cable Buss Block, and Water Pipes", Dec. 6, 2006.

4.1.3. Maximum Credible Ozone Concentrations in the Prototype ERL Cave

Toxic gasses produced by ionizing radiation shows that ozone is among the most toxic and could be produced in quantities that cause the room to exceed the ACGIH Threshold Limit Value (TLV) level of 0.1 ppm. The TLV is the concentration that most workers could be safely exposed to 8 hours per day, 5 days a week. The highest radiation doses to air are where the highest local concentration will be located. There are no locations in the Prototype ERL beam line where electrons traverse air so only the radiation energy imparted by the Bremsstrahlung is considered in this analysis. The calculation model for ozone production in Swanson was used.[33]

The highest power level in the Prototype ERL is the energy deposited in the beam dump. This is 1.2 MW of 3.5 MeV electrons. For an uncollimated Bremsstrahlung beam from an optimum high-Z target, the production rate of ozone, P in liters per minute, is:

$$P = 1.7 \times 10^{-4} L\Omega$$

Where: L = meters of air

Ω = kW of electron beam power, 1200 kW for the beam dump

The beam dump is to be enclosed in a 1-foot lead shield with at most ~6" of air that the Bremsstrahlung beam passes through before encountering shielding. The actual air passage is much less. Using these conservative assumptions yields an ozone production rate of 0.03 L/m.

[33] W. P. Swanson, Toxic Gas Production at Electron Linear Accelerators, SLAC-PUB-2470, February 1980.

As indicated by Swanson, the mean life of ozone in air at room temperature, T, is 50 minutes for a radiation environment. Any natural ventilation of the cave is conservatively ignored. The calculated saturated concentration of ozone, C_{sat}, is:

$$C_{sat} = PT/V$$

The 6 inch air volume around the dump is 12,400 in^3 (200 L) since the dump is 60 inches long x 19 inches diameter. C_{sat} for that air-gap between the dump and lead shield is $7.5x10^3$ ppm. Assuming exchange of the air in the gap occurs with cave air (V of 20,000 ft^3 or 570,000 L), then saturation concentration is reduced by a factor of 200/570000 or to a level of 3 ppm, well above the TLV limit.

Based upon this calculated result, the beam dump is to be enclosed in a tight structure maintained free of air by using an inert gas such as helium, or the air space between the dump and the lead shield will be ventilated outside the cave into B912 where the ozone will significantly dilute to safe levels. Ozone measurements will be made during ERL commissioning to determine the actual magnitude of the ozone problem and to optimize the solution.

The credible sustainable losses of the electron beam are 1 W for the 3.5 MeV electrons and 50 W for the 25 MeV electrons. The length of air until the uncollimated Bremsstrahlung beam reaches shielding is no greater than 4 meters. Assuming that the ozone produced by these losses are continuous and reach saturation in the ERL cave, the ozone concentration is 0.0003

ppm for the 3.5 MeV beam loss and 0.01 ppm for the 25 MeV beam loss. Thus there are no unsafe ozone hazards from routine electron beam losses.

4.2. Identification of Potentially Hazardous Conditions from Oxygen Deficiency

OSHA defines an oxygen deficient atmosphere in 29CFR1910.146 as atmospheres containing less than 19.5% oxygen by volume. Normal atmospheres contain ~21% oxygen. Clinically observed effects from oxygen deficient atmospheres do not begin until the concentration falls to ~17%. If a small number of workers are exposed to potential oxygen deficient atmospheres, it is cost effective to use conservative controls for protection. However, with large exposed populations it is necessary to better establish controls at an appropriate level. With too little control, the injury rate may be unacceptably high. With too much control, the ability to operate efficiently is diminished.

Controls address two types of exposures: one where a known oxygen deficiency exists, the other in which an oxygen deficiency does not exist but there is a potential for its occurrence. The latter type exposure in particular applies to Prototype ERL, although a known oxygen deficiency could exist, for example, in a confined space such as a trench in which sample results show <19.5% oxygen. Work planning would determine the controls needed to safely work in this space. Controls would include periodic atmospheric monitoring, self-contained breathing apparatus, ventilation and confined space permits. The premise for controlling a potential oxygen deficiency is that the risk to workers should be no greater than risks in a general industry setting.

If exposure to reduced oxygen from an accidental event is stopped early enough, effects are reversible or avoided altogether. If not, permanent central nervous system damage or death can result. Major effects hindering escape from the vicinity of an oxygen deficiency are disorientation and unconsciousness. For personnel actively working, unconsciousness occurs at ~13% oxygen. A person in the general area of a catastrophic release of an inert gas and not hurt by a pressure wave would be alerted to the escaping gas by the noise and, if a cryogenic gas, the cold and resulting vapor cloud. ODH training is used to alert personnel to leave the area. In this case, personnel are trained to know that they can out-walk the expanding inert-gas cloud and safely walk out the nearest ERL cave exit.

The controls for potential oxygen deficiency are focused on the workers in the general area of the potential release. The survival of individuals in the general area is highly probable because of the engineering and administrative controls, monitoring systems, and training.

For the highly unlikely scenario in which an individual is in contact or very near failed equipment at the time of failure, the affected individual would be exposed to several hazards. These would include the powerful mechanical forces that resulted in a release of gas or cryogenic liquid, a pressure vessel failure for example, and the oxygen deficiency condition. In those extreme conditions, a person would lose consciousness in seconds and probably not survive.

Training for workers includes the methods to become aware that a release of inert gas has occurred, escape methods and use of appropriate oxygen monitoring devices and escape packs.

In addition to training on use of oxygen monitors and escape packs, ODH information is given in the facility specific courses required of all employees and users.

The C-AD SAD has a detailed description of the graded approach used to determine the controls necessary for areas having a potential for oxygen deficiency. It is recognized that these simplified methods cannot directly and quantitatively address the effects of the inert gas concentration gradients during transient release of the gas. The approach is to use a prescribed, simplified analysis to determine how an individual can have reasonable assurance that they are protected from a gas release. It treats the problem in a global way, by assuming uniform instantaneous mixing of the gas in all available volume within the enclosure. For nitrogen, helium and lighter gases, used at ERL this is reasonable. As already noted, individuals near the location of any release have higher likelihoods of injury or death. Thus a combination of the BNL SBMS ODH methods coupled with engineering judgment, assumptions on worker training, evacuation procedures and monitoring equipment are utilized in determining the controls needed to ensure an acceptably safe workplace.

The BNL SBMS models are used to determine the ODH classification of a building. The SBMS is based on the Fermi ODH model. The Fermi Model is a prescribed method to determine the necessary level of hazard control for a building having the potential for oxygen deficiency. A graded approach is used to implement hazard controls as a function of the computed ODH fatality rate. The fatality rate is selected as the hazard index since death is the most important, non-reversible effect of exposure to oxygen deficiency. The average US industrial fatality rate at the time the method was developed (1984), ~10^{-7}/hr, was defined to be the fatality rate at which

protective measures, other than training and postings are required.[34] Today, that rate is about $2x10^{-8}$/hr.

Areas of ERL which have potential ODH hazards have been evaluated as described above. A low oxygen concentration set point/alarm is 18%. Alarm set points below 19.5% are acceptable because these alarms warn of accidents and not of planned, routine working conditions. ODH sensors and alarms will be located on the walls within the accelerator enclosure at eye level, and within the helium recovery building. These areas are small enough such that alarms are visible and audible from any location within the rooms. The results of the ODH analyses for the affected areas of ERL are summarized in Table 4.2.[35]

Table 4.2 Potential ODH Areas at ERL

Building	Free Volume	Bounding Cryogenic Leak Location	Spill Rate (SCFM)	ODH Exhaust Fan Capacity (SCFM)
ERL Cave in B912	20,000 ft^3	Failure of 1-inch copper LN2 transfer line	3275	13,750
ERL Helium Recovery Building	9500 ft^3	Rupture of Kinney vacuum pump helium discharge line	1150	4850

The Prototype ERL Cave volume assumed for ODH analyses conservatively excludes the labyrinth volumes and accounts for the equipment in the cave. The Prototype ERL helium recovery building volume also accounts for the equipment in the room. The results of the ODH calculations show that both the cave and the helium recovery building are ODH 0 areas.

[34] T. Miller and P. Mazur, Oxygen Deficiency Hazards Associated with Liquefied Gas Systems: Derivation of a program of Controls, Am. Ind. Hyg. Assoc. J. 45(5):293-298(1984).
[35] BNL LESHC Meeting Minutes 06-06, May 18, 2006, Energy Recovery Linac in Building 912R. Karol, ERL ODH Calculations, January 8, 2008.

4.3. Identification of Potentially Hazardous Conditions from Electrical Energy

Chapter 3 describes the numerous electrical devices, magnets, power supplies, vacuum system, Klystron, RF systems, beam instrumentation and controls that are employed at Prototype ERL.

The sheer number of electrical devices and their conductors installed at accelerator and experimental facilities justifies recognizing electrical hazards as a major personnel hazard which requires detailed hazard controls. C-AD adheres to BNL SBMS subject area on Electrical Safety supplemented by the C-A-OPM 1.5 procedure series, order to mitigate electrical hazards. The hazards are described as follows:

AC Distribution

1. The primary AC distribution is at 13.8 kV. The feeds are underground to substations located at various sites. Transformers convert the 13.8 kV to 480 volts AC for subsequent distribution. Because of the very high hazard, the substations are fenced in with controlled access by the BNL Plant Engineering personnel. C-AD personnel do not normally have access to these areas.
2. Secondary distribution is 480 V, 3 phase, 60 Hertz, high resistance ground delta with remote sub-station ground-fault monitoring system. This is used directly in many pieces of equipment, motors, pumps, power supplies, etc. It is further transformed to 220/120 V, 3 phase for lights, utility outlets and all general needs. The hazard at 480 V is not only from a 480 V shock, but also from the possible arc formation at a short circuit. The short circuit currents are extremely high and an arc can create a shock wave and spray molten

copper and other materials. The procedures followed on 480 V circuits include training, LOTO or key lockout, circuit voltage testing, and the use of proper personnel protective equipment, the use of which is based on arc flash calculation.

High Voltage, Direct Current

1. Low Current - In many pieces of electronic equipment there are high voltage, low current, power supplies. While the current in some cases may present a direct shock hazard, in others it will be too low to cause a direct injury, but may lead to indirect injuries, such as, falls, bumps or other physical or electrical mishaps. ERL components are prominently marked for a high voltage hazard and may also be interlocked if a direct shock hazard exists. ERL equipment uses high voltage power supplies and each set-up is reviewed by the ASSRC before being energized.
2. High Current - In the range of 10-50 mA passing through the body significant physical harm may occur. The RF systems, as well as various pulsed magnets, kickers, and other devices, use potentially lethal power supplies. All such power supplies are properly marked; interlocks actuated on entry to the supply are hard wired to the power source; panel indicator lights show the power supply status; local-remote lockout switches are provided where more than one turn-on location is used. Shorting devices are provided, manual or automatic, especially on capacitor storage devices.

High Current, Low Voltage

Many devices use high currents, up to several thousand amperes, at relatively low voltages. In most cases the shock hazards are low but a short circuit on the lines, just as in the 480 V AC case, can lead to excessively high temperatures. Training, proper warnings, enclosing of conductors and interlock devices are used.

RF Voltages

RF voltages in the many kilovolt level are present in the accelerating system. Contact can result in shock and deep RF burns. The procedures as in the high voltage DC case are used.

4.4. Fire Hazards

The primary combustible loading at Prototype ERL consists of magnets, power and control cables, and beam diagnostic equipment. None of the materials is highly flammable, and with the possible exception of small amounts of control cable, all are expected to self-extinguish upon the de-energizing of electric power. Small amounts of flammable materials such as cleaning fluids may be routinely used in support of Prototype ERL maintenance. These materials will be purchased and controlled in accord with BNL's Chemical Management System, and stored in accord with SBMS Subject Area requirements.

Due to a system for diversion of radioactive liquid effluent to a hold-up pond, there are no environmental impacts due to release of contaminated water from the fire protection water

system. Water sprayed on potentially radioactive equipment may become slightly contaminated but would enter the sanitary system and be monitored before release. There are no significant amounts of combustible activated materials in the Prototype ERL and no significant radioactive particles would be present in smoke. Thus, there is no significant environmental hazard from a fire at the Prototype ERL.

To mitigate Prototype ERL fire hazards the systems are designed to industry codes and standards, there is fusing, limits exist on flammable gas volumes, there is fire detection, smoke detection alarms, sprinklers, control of combustible loading, ventilation systems, safety committee reviews, training for emergencies, control of ignition sources, and enhanced work planning.

4.5. Industrial Hazards

Standard industrial hazards such as lasers, vacuum and pressure, magnetic fields, cryogens, chemicals, and mechanical hazards are controlled by following the appropriate requirements in the BNL SBMS Subject Area.

4.6. Hazard Controls

The purpose of this section is to briefly summarize the various system features and administrative programs that help to control hazards or minimize risk of various hazards. It is noted that there are no credible offsite consequences from any Prototype ERL operations. Only workers or the environment are exposed to potential hazards.

4.6.1. Radiation Hazard Controls

The significant hazard at Prototype ERL is ionizing radiation, and operations are planned to be within DOE dose guidelines. The Department uses a graded system of controls such as shields, fences or barriers, locked gates, interlocks and procedures to match access restrictions with potential radiation hazards that satisfies both the BNL and DOE requirements.

Although the Laboratory site is a limited access site, service personnel from off-site or BNL non-radiation workers may work near ERL or may traverse the complex. The BNL policy is to administratively restrict the dose to 25 mrem per year to such personnel. The C-AD adheres to this policy by using shielding, postings, radiation monitoring devices that prevent radiation levels from exceeding set points, radiation work permits, work planning and RS LOTO.

Shielding for Prototype ERL is also designed to permit access by appropriately trained personnel to areas adjacent to the accelerator cave even with credible inadvertent beam loss.

There are restrictions on access for specific Prototype ERL facility areas. Access into the machine area is prevented by dual interlocks when the machine is operational. This includes the operation of the electron beams, the RF-Gun and 5-cell cavity. Personnel access to the roof is administratively prohibited during operations. Personnel are not allowed in the 1 MW Klystron power supply room during operations. A substantial area between the adjacent experimental

building and the Prototype ERL shielding on the west side is fenced and locked with personnel excluded during operations or with limited access.

4.6.1.1. Permanent Shielding and ALARA Dose

Shielding is used to reduce radiation levels in occupied areas to acceptable levels. The C-AD's shielding policy is given in Appendix 3, Shielding Policy. Potential access points to the Prototype ERL cave where personnel are prohibited during operations will be controlled by the Access Control System and the use of chicanes.

Shielding design analyses were performed for Prototype ERL, and ALARA was integrated into the overall facility design. Soon after beam is available, studies will be conducted at low power in order to verify the design and to optimize shielding, as needed, to help achieve an ALARA dose to personnel. Extensive radiation surveys of normal operations, as well as low-intensity simulated, credible beam faults, are conducted as required during commissioning, initial operations and for future, approved modifications. These surveys provide assurance and verification of the adequacy of the shielding and access controls. It is noted that the permanent shielding and access controls are configured to support the BNL Radiation Control Manual dose limit requirements, and are further enhanced to support the BNL Radiation Control Manual ALARA considerations.

The shield was planned with ALARA in mind such that, during normal operations, the dose rate on accessible outside surfaces of the shield is planned to be less than 0.25 mrem/h in

areas under access control. Areas under access control are all designated Controlled Areas or radiological areas as defined in the BNL Radiation Control Manual. The design of 0.25 mrem/hr is a guideline based on the actual ALARA design objective of less than 500 mrem per year. That is, assuming 100% occupancy at the shield face, a 2000-hour per year residence time yields an acceptable ALARA design objective of 500 mrem. The 500 mrem per year ALARA design objective is one half the design objective stated in 10CFR835 § 835.1002 (b).

Since there are many ways to control access and residence time by area designation, training, signage and work planning and since there is a decrease of dose rate with distance from the shield face, significantly higher shield face dose rates are acceptable. Therefore, shields are evaluated in terms of the guideline of 0.25 mrem/h, and instances where higher values may be acceptable have barriers and postings to indicate where area designations play a major role in minimizing radiation exposures.

The permanent bulk shielding materials used at Prototype ERL are primarily materials used at all existing accelerator facilities. For example, concrete and iron provide protection for personnel outside the accelerator cave and Klystron room. In addition to the materials mentioned above, paraffin, borated paraffin, polyethylene, borated polyethylene and Pb may be used for local shielding and in special circumstances, along with appropriate fire safety and industrial hygiene controls. Shielding configuration is closely controlled and may not be changed without review and approval of the C-AD RSC.

4.6.1.2. Radiation Detection and Radiation Interlocks

At locations external and/or adjacent to the Prototype ERL cave where unlikely but possible beam loss may occur, the use of hard-wired, fail-safe interlocking radiation monitors are used. This technique is standard practice at DOE accelerator facilities to maintain radiological-area classification compliance by providing a robust and rapid beam inhibit if any monitor exceeds a preset interlock limit. These radiation monitors are part of the QA level A1 safety-significant access-control-system for personnel protection.

Interlocking radiation monitors at C-AD are calibrated annually. These radiation monitors have been dubbed Chipmunks. They are tissue-equivalent ionization chambers that measure dose equivalent rate, in mrem per hour, from pulsed, mixed-field neutron and gamma radiation. In the ionization chamber, total ionization from a single radiation interaction event is collected. From this ionization, the Chipmunk circuitry produces one pulse for every pico-Coulomb of charge. If the circuit is overdriven, then the circuit produces a continuous train of pulses. This feature prevents the Chipmunk from jamming at very high dose rates. The range of the Chipmunk is about 1 mrem/h to 100,000 mrem/h. Chipmunks that are used as area-radiation monitors for personnel protection are located in accessible areas of the Prototype ERL facility as determined by the C-AD RSC. Chipmunks interlock the electron beam should radiation levels exceed limits defined by the C-AD RSC. The operation of Chipmunks with interlocking capability is fail-safe. Loss of power results in beam off for interlocked Chipmunks, and/or an alarm in the Prototype ERL Control Room adjacent to Building 912, a control room that is continually manned during routine operations. Additionally, the Chipmunk uses a built-in keep-

alive radiation source to monitor for failures. Such a failure will trigger an alarm in the Prototype ERL Control Room and/or an interlock when appropriate.

The interlock system is hard-wired and uses relay logic or PLCs to activate or deactivate a device or a magnet power supply to prevent beam from entering the fault area when a fault condition is detected. These systems are monitored by an independent computer, and the fault condition is logged.

Fixed-location area-radiation monitors such as Chipmunks also provide real-time dose information in B912. This dose rate data is logged every few minutes and stored on computers. General locations are initially selected for the real-time monitors; exact locations are determined based on beam-loss tests conducted during the Prototype ERL commissioning phase and on subsequent radiation surveys during operation. Final area radiation monitoring instrument locations are approved by the C-AD RSC.

Additional area monitors may be used to assess the long-term integrated dose in areas accessible to the public and other individuals not wearing personnel dosimeters. TLDs identical to those worn by radiation workers are mounted in locations in accordance with the BNL Radiological Controls Division procedures for this purpose. The dose recorded by these TLDs is indicative of the exposure of a person spending full time at that location. Neutron dosimeters, if their use is indicated for this purpose, will be attached to phantoms to simulate use by personnel.

4.6.1.3. Control of Radioactive Materials and Sources

When the electron beam is turned off, the remaining radiation hazard comes from activated material and sources. Activation of materials is expected to be either non-existent or insignificant at Prototype ERL. Activated material may be a direct radiation hazard, and may have removable contamination. All known or potentially activated items will be treated as radioactive material and handled in accordance with BNL Radiation Control Manual requirements. Unlabeled radioactive material that is accessible to personnel is placed in appropriately posted radiological area. Unless permitted by procedure, suspect radioactive material is surveyed by a qualified Radiological Control Technician (RCT) before release and then controlled in accordance with the survey results. Known radioactive materials are appropriately labeled before removal from an area that is posted and controlled. Radioactive items with removable contamination on accessible surfaces are packaged before removal from posted radiological areas. Workers whose job assignment involves working with radioactive materials receive documented training as radiological workers. Sealed radioactive sources below BNL accountable-activity-limits are treated as radioactive material. Accountable sealed radioactive sources are controlled, labeled and handled in accordance with the BNL SBMS Subject Area and the C-AD OPM. Accountable sealed radioactive sources that are in regular use are inventoried and leak-tested every six months.

4.6.1.4. Portable Radiation Monitors

Portable radiation detection instruments are used by RCTs and, potentially, other trained and approved C-AD personnel, to measure the radiation fields in occupied areas during commissioning and periodically during normal operations. The measurements made by RCTs will be used to establish and confirm area radiological postings. Instruments used for this purpose will be appropriate for the type and energy of the expected radiation, and will be calibrated in accordance with BNL requirements.

Experience at the C-AD accelerators and experiments have shown that contamination is not a significant problem at our facilities. Prototype ERL contamination is not expected, however, routine contamination surveys are conducted to verify that contamination is not a problem. Instruments used to frisk personnel who are exiting posted areas that might contain removable contamination are used as appropriate.

4.6.1.5. Personnel Dosimetry

All radiation workers wear appropriate TLDs and self-reading dosimeters as required by the BNL Radiation Control Manual while working in areas posted for radiation hazards. Dosimeters are exchanged on a regular basis and processed by a DOELAP-accredited laboratory. Records of the doses recorded by these dosimeters are maintained, and these records are available to the monitored individuals.

4.6.1.6. Access Controls Systems

The radiation security system design for access controls at ERL is classified as QA level A1 according to the C-AD QA plan, but the Department allows certain components to have a lower classification because failure is to a safe state or critical parts are redundant. The Access Controls Group installs industrial grade components only. This Group labels parts that pass incoming tests as A1 or A2 and places labeled parts in controlled storage areas. The Group maintains documentation for these acceptance tests.

The basic design principles of the access control system are:

- Either the beam is disabled or the related security area is secured
- Only wires, switches, relays, PLCs and active fail-safe devices, such as chipmunks, are used in the critical circuits of the system
- The de-energized state of the relay is the interlock status; that is, the system is fail-safe
- Areas where radiation levels can be greater than 50 rem/h require redundancy in disabling the beam and in securing the radiation area
- If a beam fails to be disabled as required by the state of its related security area, the system has backup or reach-back

Very High Radiation Areas are those areas that enclose primary beam. Very High Radiation Area hardware requirements comply with the BNL Radiation Control Manual. The C-AD RSC requires:

- Locked gates with two independent interlock systems
- Fail safe and redundant radiation monitors or other sensing devices
- Indicators of status at the facility in the Prototype ERL control room
- Warning of status change
- Emergency stop devices within potential Very High Radiation Areas

The C-AD RSC reviews interlock systems for compliance with requirements in the BNL Radiation Control Manual, SBMS requirements and C-AD OPM procedures. A Representative of the BNL Radiological Controls Division is a member of the C-AD RSC. The C-AD RSC defines the design objectives of the security system and approves the logic diagrams for relay-based circuits and state tables for PLC-based circuits. Cognizant engineers sign-off on wiring diagrams and the C-AD Chief Electrical Engineer approves each diagram. The C-AD Access Controls Group maintains design documentation.

The Access Controls Group conducts a complete functional check of all security system components at an interval required by the BNL Radiological Control Manual. In the checkout, the Access Controls Group checks the status of each door-switch on a gate, and each crash switch in the circuit. They check the interlocks and the off conditions for all security-related power-supplies to magnets and magnets that may act as beam switches. They check every component in a security circuit. As they test, they fill-out, initial and date the security system test-sheets obtained from the C-AD OPM. Test records are maintained as required by the C-AD OPM.

4.6.2. Control and Use of Hazardous Materials

The BNL Subject Area on Working with Chemicals is designed to ensure that workers are informed about the chemical hazards in their workplace. The Subject Area is maintained to comply with OSHA and EPA regulations concerning hazardous chemical communications. The BNL Subject Area on Working with Chemicals includes provisions for policy, training, monitoring exposure limits, handling, storing, and labeling and equipment design, as they apply to hazardous materials. Inclusive in the hazardous material protection program will be: procurement, usage, storing, inventory, access to the hazardous materials, use of appropriate Personal Protective Equipment (PPE), as well as housekeeping and chemical hygiene inspections of C-AD facilities. All BNL general employees receive appropriate general Hazard Communication training. Standards for general hazardous materials communication are specified by the BNL SBMS. Training to these standards is provided, and the training program records are maintained on the Brookhaven Training Management System (BTMS). C-AD staff working in ERL areas with a potential for exposure to hazardous chemicals receive appropriate job-specific training at the time of initial assignment and whenever a new hazard is introduced into the work area. A comprehensive listing of all Materials Safety Data Sheets for the chemicals used at the BNL site is available on the BNL web;[36] a goal is to have all chemicals accounted for in the BNL Chemical Management System (CMS). The system of work controls, which is part of the BNL ISMS, requires enhanced work planning for work with certain hazardous materials. The enhanced work planning ensures that adequate hazard controls and completion of required training are in place before work with hazardous materials begins.

[36] http://intranet.bnl.gov/esh/cms/

The use of flammable liquids is minimal. Light industrial chemicals may be in use such as acetone, ethyl alcohol that is used as general cleaning solvent, glass cleaner, PVC cement that is used for insulation work, and spray paint. Any use of flammable liquids follows BNL SBMS requirements.

4.6.3. Electrical Safety

The requirements for electrical safety are given in detail in the BNL SBMS and the C-AD OPM. Electrical bus work is covered to reduce/prevent electrical hazards in the power supply areas. In the Prototype ERL cave, exposed conductors will not be present and magnet buss is covered. In Controlled Access mode, even though the magnets will not be powered, the power supplies will not be locked out. Workers are trained to assume that magnets are powered in all cases and to treat them accordingly. In cases where workers are required to work on or near a specific magnet during Controlled Access or Restricted Access, the magnet power supply will be locked out and tagged out by the worker.

In some cases, it will be necessary to work near magnetic elements while powered. Appropriate control over access during this mode is maintained by the Prototype ERL Operations Supervisor. Work planning, Working on or Near Energized Conductor Permits and training requirements for entrants under these circumstances address concerns for inadvertent contact with powered conductors and exposure to magnetic fields.

4.6.4. Lockout/Tagout Program

Lockout/tagout procedures are specified in the C-AD OPM. All workers will be required to train in lockout/tagout procedures at a level consistent with their position. Where electrical hazards could be present to C-AD personnel working in an area, lockout/tagout procedures are implemented only by trained and LOTO authorized personnel.

Breaker/disconnect operations as part of the LOTO follows the electrical PPE requirements of the BNL SBMS subject area, Electrical Safety, which is equal to or more restrictive than NFPA 70E in order to prevent injury from arc flash accidents.

4.6.5. Safety Reviews and Committees

Standing safety committees are utilized throughout design, construction, commissioning and operation to focus expertise on safety, environmental protection, pollution prevention and to help maintain configuration control. See Chapter 3 for details of each committee's authority and responsibility.

4.6.6. Training

Worker training and qualification is an important part of the overall ESH plan for he C-AD. Training and qualification of workers is described in the Operations Procedures Manual

and the required training for individuals is defined in the BTMS. All staff personnel and experimenters require an appropriate level of training to ensure their familiarity with possible hazards and emergency conditions.

Workers are trained in radiation and conventional safety procedures at a level consistent with their positions. The number and type of training sessions/modules is assigned using a graded approach commensurate with the staff members' responsibilities, work areas, level of access, etc. An up-to-date record of worker training is kept in the BTMS database. Radiation worker access will only be allowed if adequate training is documented, except in cases of emergency. Training procedures and course documentation will be reviewed and updated periodically.

4.6.7. Personal Protective Equipment

Special clothing is used to protect workers who are exposed to the various electrical hazards and hazardous materials, including chemicals and radiation. The clothing for a particular application is selected considering the expected hazards; a variety of types of clothing is needed to meet all hazards. There are no predicted hazards that are unique to C-AD facilities; experience and compliance with DOE 10CFR851 ensure the adequacy of protective clothing in a particular application.

Respiratory protection is provided for workers who might otherwise be exposed to unacceptable levels of airborne hazardous materials, including chemicals, oxygen deficient atmospheres and radioactive materials. Respiratory protection is selected, used and maintained per OSHA 29CFR1910.134 and BNL Respiratory Protection Procedures.

4.6.8. Significant Environmental Aspects and Impacts

In support of BNL's broad mission of providing excellent science and advanced technology in a safe, environmentally responsible manner, the C-AD is committed to excellence in environmental responsibility and safety in all C-AD activities, including Prototype ERL operations and maintenance.

To provide excellent science and advanced technology in a safe and environmentally responsible manner the C-AD has, over the past 20 years, continuously reviewed the aspects of its operations in an effort to identify and accomplish waste minimization and pollution prevention opportunities. This process began in 1988 with the development of formal environmental design guides and a design review process. More recently, this effort has resulted in a further formalization of its processes under the guidelines of ISO 14001, the BNL ISO 14001 "Plus" Environmental Management System Manual, and SBMS subject areas governing ISO 14001 implementation. The BNL EMS program emphasizes compliance, pollution prevention and community outreach. Based on the aspect identification and analysis process in

the Subject Area, Identification of Significant Environmental Aspects and Impacts, the following aspects are examples of significant aspects at the Prototype ERL:

- Regulated industrial waste
- Hazardous waste
- Radioactive waste
- Atmospheric discharge
- Liquid effluents (not expected to be radioactive)
- Storage/use of chemicals or radioactive material
- Soil activation (not expected to be significant)

The environmental policy as set forth by BNL in the Environmental, Safety, Security and Health Policy is the foundation on which the C-AD manages significant environmental aspects and impacts. The formal management program is called the C-AD Environmental Management System. The Environmental Management System details may be found in the C-AD OPM.[37]

The process evaluations are documented in C-AD OPM Chapter 14. Waste streams are reviewed by the C-AD Environmental Compliance Representative (ECR) and a process evaluation denoting all material inputs and outputs for the each process of Prototype ERL is on file for existing processes. While waste streams at Prototype ERL will be the same as for other accelerators in the C-AD complex, although in much less quantity, a new process evaluation is performed for each new, significant process at Prototype ERL before use.

[37] http://www.rhichome.bnl.gov/AGS/Accel/SND/OPM/Ch01/01-10-02.PDF Environmental Management Program Description Collider-Accelerator Department and Superconducting Magnet Division

4.6.9. Hazard Reduction Associated with Waste Generation and Handling

Hazards associated with handling, packaging, treating and disposing of wastes generated during operation and modification of the facility are reduced when the generation of these wastes is minimized via pollution prevention (P2) techniques. The BNL approach to P2 associated with the operation and modification of accelerators and experiments is to address it during the design and construction phase. The objective is to minimize or eliminate the anticipated costs associated with hazardous and mixed waste generation as well as the treatment and disposal of wastes and the consumption of resources in all ERL life cycle phases: construction, operation, closure and decommissioning. Dollars spent during the design phases will provide for significantly reduced total costs over the life of the facility thus making more funds available for science. The following are the main objectives of the BNL P2 program:

- Minimize the amount of hazardous, radioactive and mixed wastes that are generated
- Minimize the cost of waste management
- Comply with federal, state and local laws, executive orders and DOE orders

The C-AD has implemented a P2 program as part of its commitment to comply with the Environmental Management System and ISO 14001. C-AD facilities have been registered to the ISO standard by a third party registrar since CY 2000. Modifications to C-AD operations have helped minimize hazards and costs associated with the generation of waste streams.

4.6.10. Fire Detection, Egress, Suppression and Response

The basis of design for fire detection, egress, suppression and response has been determined by coordination with the BNL Fire Protection Engineer (FPE) and an outside consulting group. FHAs are on the C-AD website. C-AD facilities comply with DOE fire protection guidelines as well as NFPA standards, or else have approved exemptions from the local Authority Having Jurisdiction (AHJ), which is the BNL Fire Safety Committee. The system is integrated with the site-wide system and is comprised of an automatic fire detection and suppression system that includes automatic fire suppression and rapid response capability coverage by the BNL Fire Department. Sprinklers are not provided at the Building 912 ceiling or roof levels, but rather at intermediate levels and at or within enclosures, as required. Because of the low flammability of the magnets, power cables, control cables and beam diagnostic equipment, they do not have automatic fire suppression systems, except for certain areas where significant risk of programmatic disruption exists. Manual and automatic fire detection and alarm initiation devices are installed throughout the facility. Where needed, smoke and/or heat detection devices are supplemented with pressure sensitive sensors, flammable gas detectors or other advanced detection devices such as high sensitivity smoke detection (HSSD). The appropriate portable fire extinguishers are provided for manual fire fighting efforts by trained staff. Fire alarms are alarmed at the BNL Fire Department, Building 599, and at BNL Police Headquarters, Building 50, thus providing continuous coverage for rapid fire response. This will put additional professional fire fighting resources into action within a short period. Roadways around the facility help protect it from surrounding wildfires. The buildings' roofs are non-combustible metal and do not ignite from burning ash from brush fires.

The means of egress for occupants is in accordance with NFPA 101. Enclosure exhaust fans are located within the ERL ring enclosure and may be used for rapid smoke removal.

4.6.11. Routine Credible Failures

Routine credible challenges to controls associated with worker and experimenter protection and with environmental protection are further detailed in Appendix 6, Qualitative Risk Assessments.

Beam losses at Prototype ERL are sufficiently attenuated by the bulk shielding for expected routine operation. Adequate shielding is provided to meet requirements established by the Laboratory for permissible exposure to radiation workers, non-radiation trained workers and members of the public during normal machine operations. Present Prototype ERL shielding designs reduce all normal radiation levels to well below the DOE ALARA guidelines.

Exposure to nearby facilities from Prototype ERL operations is less than 25 mrem per year and only a small fraction of the permitted 5 mrem per year at the site boundary, which are the Laboratory guidelines for radiation exposure for nearby facilities and the site boundary, respectively. Radiation exposure to maintenance workers is reduced through the design of equipment to simplify maintenance and the selection of materials to minimize failures. Through such reviews, maintenance activities will be controlled to maintain radiation exposures well

within the DOE annual limits, limits that are 5 to 20 times higher than the Department's ALARA guidelines.

There are no significant quantities of dispersible gaseous or liquid radioactive materials produced at Prototype ERL. Operations personnel are trained to confine, clean up and report all water spills to management. Experience indicates that periodic leaks may occur onto the concrete floor. Spilled water is sampled before release to the appropriate waste stream or is allowed to safely evaporate in place. No offsite threats to the public are present.

4.7. Evaluation of Potential Impacts to Workers, Public and Environment

The routine radiation dose to workers is well below the regulatory limits. Worker exposure to other industrial hazards such as oxygen deficiency hazard is controlled such that potential injury is improbable. Due to the short range of the radiations, the risks to the public are zero.

Worker radiation doses, even including the maximum credible beam fault dose on a frequent basis, would not cause deterministic effects such as burns or tissue damage unless an individual were in the beam enclosure during operations. The ACS, which is categorized as Safety-Significant, assures that such irradiations are not credible.

Cooling water spills are unlikely due to adherence to ASME codes and consensus design standards. Due to the lack of chemicals and dispersible radioactivity, operation of the Prototype ERL facility is anticipated to have virtually no impact on the environment.

4.8. Selection of Control Measures that Reduce Risks to Acceptable Levels

Credited controls have been selected to favor reliance on passive over active design features and to favor engineered controls over administrative controls. Mitigation of risks associated with the Prototype ERL facility is largely achieved with passive design features. The configuration of the Prototype ERL facility meets the C-AD mission of producing an intense source of pulsed electrons while satisfying safety requirements, foremost of which is the attenuation of prompt and secondary radiation. The passive shielding built into the Klystron, ring enclosure, and certain Prototype ERL structures (e.g., beam stop) was designed to passively reduce penetrating radiation to levels that are ALARA and to allow unencumbered access by users and staff in areas routinely occupied by personnel.

Active credited engineered controls are employed as needed to protect workers and users from radiation exposure, ODH and the equipment from extensive fire damage. For example, the ACS provides beam trips in response to access violations into hazardous areas or detection of elevated radiation levels in certain potentially occupied areas. Another example of an active engineered control is the ring enclosure ventilation system that activates upon ODH alarms. An example of engineered equipment protection is the sprinkler system. Proper function of active controls is ensured by required surveillance/maintenance requirements specified in the ASE.

Certain credited administrative controls have also been identified. To a large extent, required administrative controls are addressed by ISM programs already well established and maintained at BNL (e.g., radiation protection, electrical safety, etc.). Administrative controls specific to Prototype ERL are addressed by ASE requirements to ensure their safety function is maintained.

4.9. Listing of All Credited Engineered and Administrative Controls

Table 4.9.a Summary of Credited Engineered Controls

	Credited Engineered Control	Applicable Events
1	Chipmunk-interlocked beam cutoff on abnormal radiation levels	Table A.6-4 Qualitative Risk Assessment – Radiation External to Enclosure
2	Access-controlled gates	Table A.6-4 Qualitative Risk Assessment – Radiation External to Enclosure
3	Ionizing radiation shielding	Table A.6-4 Qualitative Risk Assessment – Radiation External to Enclosure
4	Fire detection and suppression systems	Table A.6-11 Qualitative Risk Assessment – Fire
5	ODH monitoring system	Table A.6-12 Qualitative Risk Assessment – Oxygen Deficiency Hazards (ODH)
6	ASME rated pressure relief valves and burst disks, ASME compliant pressure vessels and piping or equivalent	Table A.6-7 Qualitative Risk Assessment – Conventional/Industrial Hazards
7	Remote sub-station ground-fault monitoring system	Table A.6-3 Qualitative Risk Assessment – Electric Shock/Arc Flash

Table 4.9.b Summary of Credited Administrative Controls

	Credited Administrative Control	Applicable Events
1	Review of radiation safety by C-AD RSC	Table A.6-4 Qualitative Risk Assessment – Radiation External to Enclosure
2	Configuration controlled ACS drawings and computer codes; annual ACS testing	Table A.6-4 Qualitative Risk Assessment – Radiation External to Enclosure
3	Configuration controlled shield drawings and calculation codes	Table A.6-4 Qualitative Risk Assessment – Radiation External to Enclosure
4	Annual fire detection and suppression system tests	Table A.6-11 Qualitative Risk Assessment – Fire
5	ODH monitor calibrations	Table A.6-12 Qualitative Risk Assessment – Oxygen Deficiency Hazards (ODH)
6	Relief valve and burst disk maintenance according to ASME standards	Table A.6-7 Qualitative Risk Assessment – Conventional/Industrial Hazards
7	Ground-fault alarm testing	Table A.6-3 Qualitative Risk Assessment – Electric Shock/Arc Flash

4.10. Description of the Maximum Credible Incident

The maximum credible incident is the incident in terms of property loss or injury to personnel that would result assuming all installed safety systems functioned as designed.

4.10.1. Maximum Credible Fire Incident

The objectives of presenting no threats to the public health and welfare or undue hazards to life from fire are satisfied. The designs of all C-AD facilities comply with the "Life Safety Code" (NFPA 101) and NYS Building Code and with the specific requirements of the

Occupational Safety and Health Standards (CFR29, Part 1910) applicable to exits and fire protection.

Welding gases and flammable/explosive gases are used and stored according to NFPA codes and standards applicable to experimental installations. Gases are stored in compressed gas cylinders that meet Department of Transportation (DOT) specifications. Large quantities of gas are forbidden in accelerator areas. There are no off-site threats to the public should a cylinder fail.

The facility is designed with an "improved risk" level of fire protection. The design requirements that were used are found in: 1) DOE Order 420.1, Facility Safety and 2) DOE Order 6430.1A, General Design Criteria. Prototype ERL is fitted with fire detectors and fire protection systems where appropriate. Fires are expected to be extinguished by these protective systems. Combustible loading in the Prototype ERL beam cave and other power supply areas consists of magnets, power cables, control boards, control cables and beam diagnostic equipment. None of the materials are highly flammable, and with the possible exception of small amounts of control cable and circuit boards, all are expected to self extinguish upon de-energizing of electric power. Induced radioactivity is deeply entrapped in concrete shielding and is not dispersible in a fire. There are no offsite threats to the public from a fire.

The personnel risks associated with the fire hazard are acceptable considering the type of building construction, the available exits, the fire detection systems, the fire alarm systems and

the relative fire-safety of the components and wiring. Emergency power and lighting is available in accordance with fire industry standards.

Travel distances to exits at Prototype ERL do not present a problem. In structures of low or ordinary hazard and in structures used for general or special industrial occupancy, NFPA 101 permits travel distances up to 120 m to the nearest exit if the following provisions are provided in full:

- Application is limited to one-story buildings only
- Interior finish is limited to Class A or B materials per NFPA definitions
- Emergency lighting is provided
- Automatic sprinklers are provided in accordance with NFPA 101 or exempted by the local AHJ
- Extinguishing system is supervised

Smoke and heat venting by engineered means or by building configuration are provided to ensure that personnel are not overtaken by spread of fire or smoke within 1.8 m of floor level before they have time to reach exits.

DOE has established limits of $1,000,000 for a Maximum Possible Loss and $250,000 for a Maximum Credible Loss mandating the installation of automatic suppression systems in locations where those limits are exceeded. Prototype ERL design meets these criteria. It is noted

that Prototype ERL is an experimental facility with a limited life time that allows judgment by the AHJ in determining the fire protection requirements.

Based on previous experiences at C-AD, the predominant sources of fire initiation have come either from electrical malfunctions or overheating in beam-line components such as magnets, which have caused a break down of the electrical insulation and subsequent arcing. The maximum credible fire incident was determined by the AHJ to be a fire in one magnet and damage to the two adjacent magnets. While the klystron's 100 kV transformers have 800 gallons of oil, it was felt that smoke detectors, interlocks to turn off power to the 100 kV transformers, fire sprinklers, low-flammability oil in the transformers, secondary containment and onsite fire responders would result in a less credible fire incident.

4.10.2. Maximum Credible Electrical Accident

The electrical systems and equipment in use at Prototype ERL is the same as that in use at C-AD facilities for many years. This statement does not minimize the inherent dangers; rather, it indicates that the technical personnel are experienced on accelerator circuits and devices. Additionally, they are qualified to work on these systems. Every engineer, technician and electrician that is expected to work on the facility equipment is adequately trained. The training includes an awareness of potential hazards and knowledge of appropriate safety procedures and emergency response plans. Training is documented and a list of authorized personnel is kept on a network electronic database (BTMS) and is available to supervisors.

The C-AD staff is familiar with the types of electrical hazards that relate to the accelerators and experimental areas. All required safety features are installed in and on the electrical equipment. The groups that maintain, repair, test and operate the equipment have the knowledge, tools and experience to perform safely. Work planning, which includes electrical safety procedures, working on or near energized conductor permits and, when required for high hazard work, job safety analyses is done to adhere to the safe practices mandated by OSHA and the BNL SBMS Subject Area on Electrical Safety. Periodic retraining improves the safety margin. Thus, the potential risk for a serious electrical shock is minimized to levels currently accepted throughout the industry.

4.10.3. Risk Assessment to Workers, the Public and the Environment

4.10.3.1. Radiation Risks

The routine radiation dose to workers is well below the DOE regulatory limits of 10CFR835. The range of doses received by C-AD radiation workers in FY2007, which was a typical recent year with the RHIC nuclear physics program, was from zero to ~60 mrem. Experience shows the average exposure of C-AD radiation workers is close to zero mrem during the RHIC nuclear physics program. The dose to an average C-AD radiation worker is only a small fraction of the regulatory limit, and the increase in fatal cancer risk after a lifetime of radiation work, 50 years, is insignificant, <<0.06%[38] compared to the naturally occurring fatal cancer rate of nearly 20%. Additionally, data shows the radiation burden for the C-AD worker

[38] This assumes a risk coefficient of 4×10^{-4} per rem for workers from NCRP Report No. 115, Risk Estimates for Radiation Protection (p. 112) and a 50-year career at 30 mrem per year.

has been declining for the past four decades. The risks to the public are an extremely small fraction of worker risk.

Worker doses at Prototype ERL, even including the maximum credible beam fault dose on a frequent basis, would not cause deterministic effects such as burns or tissue damage unless an individual were in the Prototype ERL accelerator cave during operations. The ACS, which is categorized as Safety-Significant, assures that such irradiations are not credible.

4.10.3.2. Environmental Risks from Radiation

There are no credible risks to the environment from groundwater contamination caused by Prototype ERL operations. Any spill of the insignificant levels of radioactive cooling water from a failed pipe or hose would have no environmental impact.

4.10.3.3. Fire Risks

Based on the extensive use of fire protection as determined by the BNL Fire Protection Engineer, the appropriate location of exits and the use of emergency ventilation exhaust systems, high or medium consequence levels are extremely unlikely. Thus, the fire risk is acceptable.

4.10.3.4. Electrical Risks

Based on the use of formal C-AD electrical safety procedures, working on or near energized conductor permits and, for high hazard work, job safety analyses, high or medium consequence levels are extremely unlikely. Thus, the risk is acceptable.

4.10.4. Professional Judgment Issues

The initial screening of Prototype ERL hazards was performed using qualitative engineering judgment. The C-AD engineering, operating and safety staff has many years of experience with BNL accelerators and experiments. This experience influenced the analyses of Appendix 2.

Experience has also influenced the choice of conservative maximum hourly routine and faulted beam power limits which have been used as the bases for the shielding and ALARA analyses. These judgment issues have always been and will continue to be verified by beam fault studies.

4.10.5. Methods Used in Evaluation of Radiological Hazards

Techniques employed in the evaluation of radiological hazards include the use of empirical formulae and graphs[39] and the Monte Carlo Program MCNPX[40]. MCNPX is probably the most widely used transport Monte Carlo code.

Past radiation dose rate measurements at C-AD accelerators have been made which show that dose equivalent and activation calculations are overestimates and should be regarded as upper limits.[41]

[39] NCRP Report No. 144, Radiation Protection for Particle Accelerator Facilities
[40] L. S. Waters, Ed., "MCNPX USER'S MANUAL," LANL Report TPO-E83-UG-X-0001, (1999). See also H.G. Hughes, R.E. Prael, R.C. Little, "MCNPX – The LAHET/MCNP Code Merger," X-Division Research Note, 4/22/97. The version number of the code used in this note is 2.1.5.
[41] A.J. Stevens, "Summary of Fault Studies at RHIC." BNL C-A Dept ES&F Note 156 (2000). http://server.c-ad.bnl.gov/esfd/epstechnote.html

5.Basis for Accelerator Safety Envelope

Limits for safe operations are captured in the Accelerator Safety Envelop (ASE). The ASE summarizes specific limits for hazards not routinely encountered in an industrial operation, which in this case is ionizing radiation. In addition, the ASE summarizes limitations, in a general way, derived from federal regulations or acts, DOE Orders and consensus standards (e.g., DOE Order 420.2B, OSHA, NEPA, 10CFR851, 10CFR835 and NFPA codes).

Two documents were used as references to guide the format of the ASE and they were: BNL's template[42] and DOE's Accelerator Facility Safety Implementation Guide.[43] Page 28 in the DOE Guide, item vii, discusses alternative requirements that may be specified in an ASE, and the need for procedures to implement these alternatives if used. The suitability of alternatives applicable to the Prototype ERL ASE was determined by LESHC and by the BNL Fire Protection Engineer for accelerators at C-AD.[44] With regard to the use of 12 to 15-month intervals in the ASE, this issue was reviewed by the Radiation Protection Working Group,[45] and later documented in the BNL RadCon Manual to be at the discretion of the BNL Radiation Safety Officer.

The ASE formally establishes the set of bounding conditions on engineered and administrative systems, within which the C-AD proposes to operate the Prototype ERL. These bounding conditions are based on the safety analysis documented in Chapter 4 of the SAD. The

[42] https://sbms.bnl.gov/sbmsearch/subjarea/40/40_Exh3.cfm?ExhibitID=6366
[43] http://www.rhichome.bnl.gov/AGS/Accel/SND/420Guide/Accelerator%20Safety%20Order%20Guide%20FY05.pdf
[44] See Meeting 03-01 at http://www.rhichome.bnl.gov/AGS/Accel/SND/past_leshc_business.htm
[45] http://www.rhichome.bnl.gov/AGS/Accel/SND/RSC/AnnualInterlockTestingIssue.pdf

ASE assures the validity of the basis set of assumptions used in the safety analysis and helps ensure the physical and administrative controls used to mitigate potential hazards are in place.

DOE requires adherence to the approved bounding conditions of the ASE because it is the authorization basis for all commissioning and operations activities at the Prototype ERL.

The ASE is divided into 5 Sections, and the first and second Sections address ASE administration and the limits for ionizing radiation exposure at the BNL site as a whole. Section 3 addresses specific limits for ionizing radiation and other unique industrial hazards at the Prototype ERL. Specific ASE limits in terms of particle energy and beam power are normally used to address the ionizing radiation hazard. Other specific limits such as protection against loss from fire during periods of beam operation may be found in this section. Finally, ASE limitations in Sections 4 and 5 summarize the practices to be used to limit operational, environmental, safety and health events routinely encountered in an industrial operation.

Strict adherence to the approved bounding conditions in Section 2, 3 and 4 of the ASE is expected during all commissioning and operations activities.

The highest-level information, "Safety Envelope Limits," is documented in Section 2 of the ASE. These are site-wide BNL requirements and they are:

- Less than 25 mrem in one year to individuals in other BNL Departments or Divisions adjacent to an accelerator facility
- Less than 5 mrem in one year to a person located at the site boundary
- Off-site drinking water concentration and on-site potable well water concentration must not result in 4 mrem or greater to an individual in one year

- Less than 1250 mrem in one year to an accelerator facility staff member
- Tritium concentrations in the sanitary sewer effluent less than 10,000 pCi/L
- Radioactive liquid effluent from soil activation is to be prevented
- Airborne effluents must result in emissions less than 0.1 mrem in one year to a person at the site boundary

- Based on the BNL requirements in Section 2, "Corresponding Safety Envelope Parameters" for the Prototype ERL are documented in Section 3. These are critical operating parameters that ensure the Prototype ERL will not exceed the BNL Safety Envelope Limits. These specific parameters are derived from the safety analysis of the SAD.

Authorized alternatives are also defined in Section 3. Authorized Alternatives may be used whenever the Corresponding Safety Envelope Parameter cannot be met. For example, during periods when a fire protection system becomes temporarily inoperable due to a failed smoke detector, one may allow up to 80 hours where compensatory actions may be used. Compensatory actions are prescribed in operating procedures and must have accelerator management approval in order to be implemented.

Section 4 of the ASE specifies the limits applicable to Prototype ERL engineered safety systems requiring calibration, testing, maintenance, and inspection. The frequency of functional testing and calibration of these systems is specified in Section 4.

Section 5 is reserved for administrative controls and is termed “Operations Envelope.” As allowed for in the DOE ASO Guide G420.2-1, July 1, 2005, BNL may establish an

"Operations Envelope" within the ASE, and this is done via Section 5. According to the DOE Guide, an "Operations Envelope" serves to prevent the ASE from being exceeded. Variations of operating parameters within the "Operations Envelope" of the Prototype ERL are considered normal operations. Variation outside the "Operations Envelope" but within the ASE Sections 2, 3 and 4 merits appropriate attention; however, it does not require termination of Prototype ERL activities or notification of DOE.

5.1. Connection between Engineered and Administrative Bounding Conditions and ASE

Radiation shields for the electron gun, beam dump and accelerator ring are adequate to attenuate ionizing radiation from these sources to less than BNL Safety Envelope Limits in the ERL ASE.

Radiation safety interlocks have to be tested and maintained as part of the Access Control System. Interlocks shut down beam and maintain personnel exposures with the BNL Safety Envelope Limits in the Prototype ERL ASE.

Unauthorized accesses through interlocked doors that lead into the accelerator enclosure shut down beam and maintain personnel exposures within the BNL Safety Envelope Limits in the Prototype ERL ASE.

The engineered method to prevent fault levels of radiation outside the shielded enclosure is accomplished by an appropriate distribution of area radiation monitors. Interlocks shut down beam and maintain personnel exposures with the BNL Safety Envelope Limits in the Prototype ERL ASE.

The engineered fire protection system limits in the ASE limit Prototype ERL programmatic loss to a level consistent with the highly protected risk status in private industry, as required in DOE Order 420.1B, Facility Safety.

The calibration, testing, maintenance and inspection limitations in the ASE for the engineered ODH monitoring system, radiation monitoring system, access control system, fire protection system, pressure relief devices and ODH-related ventilation system meet consensus standards and regulatory requirements in 10CFR851 and 10CFR835.

The operations envelop / administrative limits in the Prototype ERL ASE for control room staffing, training and qualification, work planning, configuration control, environmental management and worker safety and health meet requirements in DOE Orders 5480.19, 420.2B, 5400.5, 450.1, 435.1, 420.1B, 414.1C, 243.1 and in 10CFR851 and 10CFR835 and requirements in BNL SBMS Subject Areas.

5.2. ASE Consideration for Routine and Non-Routine Operating Conditions

The ASE has bounding parameters to control beam loss, classify radiological areas, and control access to radiological areas. Beam faults are terminated by radiation monitors. The ASE requires interlocking radiation monitors and routine radiation surveys in occupied areas in order to minimize radiation exposures where practicable. Routine radiological areas, radiological barriers, ALARA and radiological work are further bounded in the ASE by requiring Prototype ERL to meet requirements in the BNL Radiological Control Manual.

6.Quality Assurance

6.1. The Ten Management, Performance and Assessment Criteria of DOE O 414.1C

The criteria below are followed and are further explained in the referenced sections:

- Criterion 1- Quality Assurance Program (see Section 6.2)
- Criterion 2 - Personnel Training and Qualification (see Section 6.3.1)
- Criterion 3 - Quality Improvement (see Section 6.3.2)
- Criterion 4 - Documents and Records (see Section 6.3.3)
- Criterion 5 - Work Processes (see Section 6.3.4)
- Criterion 6 – Design (see Section 6.4.1)
- Criterion 7 – Procurement (see Section 6.4.2)
- Criterion 8 - Inspection and Acceptance Testing (see Section 6.4.3)
- Criterion 9 - Management Assessment (see Section 6.5)
- Criterion 10 - Independent Assessment (see Section 6.6)

6.2. Quality Assurance (QA) Program at Prototype ERL

The C-AD and the Prototype ERL project have adopted, in its entirety, the BNL Quality Assurance Program. This QA Program describes how the various BNL management system processes and functions provide a management approach that conforms to basic requirements defined in DOE Order 414.1C, Quality Assurance.

The quality program embodies the concept of the "graded approach," i.e., the selection and application of appropriate technical and administrative controls to work activities, equipment and items commensurate with the associated environment, safety, security and health risks and programmatic impact. The graded approach does not allow internal or external requirements to be ignored or waived, but does allow the degree of controls, verification, and documentation to be varied in meeting requirements based on risk. Any variation from external safety requirements and consensus standards must be done in accordance with the processes allowed in 10CFR851, Worker Safety and Health Program. The BNL QA Program is implemented within the Prototype ERL project using C-AD QA implementing procedures. These procedures supplement the BNL SBMS documents for those QA processes that are unique to the C-AD. C-AD procedures are maintained in the C-AD Operations Procedures Manual. These procedures establish an organizational structure, functional responsibilities, levels of authority, and interfaces for those managing, performing, and assessing work. They also establish management processes, including planning, scheduling, and providing resources for work.

The C-AD QA philosophy of adopting the BNL Quality Program and developing departmental procedures for the implementation of quality processes within C-AD ensures that complying with requirements is an integral part of the design, procurement, fabrication, construction and operation of the Prototype ERL.

A Quality Representative serves as a focal point to assist C-AD management in implementing QA program requirements. The Quality Representative has the authority,

unlimited access, both organizationally and facility-wise, as personnel safety and training allows, and the organizational freedom to:

- assist line managers in identifying potential and actual problems that could degrade the quality of a process/item or work performance
- Recommend corrective actions
- Verify implementation of approved solutions

All ERL personnel have access to the C-AD Quality Representative for consultation and guidance in matters related to quality.

6.3. QA Activities That Impact Protection of Worker, Public or Environment

6.3.1. Personnel Training and Qualifications

The BNL Training and Qualification Management System within the SBMS supports C-AD management's efforts to ensure personnel working at the Prototype ERL are trained and qualified to carry out their assigned responsibilities. The BNL Training and Qualification Management System is implemented within the C-AD with the C-AD Training and Qualification Plan of Agreement. C-AD provides continuing training to personnel to maintain job proficiency.

6.3.2. Quality Improvement

C-AD has established and implemented processes to detect and prevent problems with the quality of the work and vendor purchases. The Department identifies, controls, and corrects items, services, and processes that do not meet established requirements. ERL staff identifies the causes of problems, and includes prevention of recurrence as a part of corrective action planning. The Department has programs to periodically review item characteristics, process implementation, and other quality-related information to identify items, services, and processes needing improvement.

The BNL Quality Management System, supplemented by C-AD procedures, provides the requirements to identify, document and disposition nonconformance and to establish appropriate corrective and preventive actions that are based on identified causes. The BNL Quality Management System provides guidance for trending nonconformance to recognize recurring, generic or long-term problems.

The decision to initiate quality improvement is based upon an evaluation of the seriousness, and the adverse cost, schedule, safety and environmental impact of the nonconformance relative to the cost and difficulty of its correction. In some cases, corrective action of a nonconformance may not be feasible in the near term, and equivalent protections are used.

The C-AD Self Assessment Program provides information on scientific, business and operational performance for management, staff, customers, stakeholders and regulators associated with Prototype ERL. Self-assessment also provides a mechanism for improving the rules that govern training and qualifications, documents and records, work process, design, procurement, inspection and testing, and the assessment process itself. The Self-Assessment program evaluates performance relative to critical outcomes and internal performance objectives in order to identify strengths and opportunities for improvements.

6.3.3. Documents and Records

The C-AD prepares, reviews, approves, issues, uses, and revises documents to prescribe processes, specify requirements, or establish design for the Prototype ERL. Additionally, the C-AD specifies, prepares, reviews, approves and maintains Prototype ERL records.

The BNL Records Management System and controlled document Subject Areas within SBMS, supplemented by C-AD procedures, provide the requirements and guidance for the development, review, approval, control and maintenance of documents and records.

Prototype ERL documents encompass technical information or instructions that address important work tasks, and describe complex or hazardous operations. They include plans, procedures, instructions, drawings, specifications, standards and reports.

Records are information of any kind and in any form, created, received and maintained as evidence of functions, policies, decisions, procedures, operations, or other activities performed within the Department. Records are retrievable for use in the evaluation of acceptability, and verification of compliance with requirements. Department records are protected against damage, deterioration or loss.

6.3.4. Work Process

Work is performed employing processes deployed through the BNL SBMS. SBMS Subject Areas are used to implement BNL-wide practices for work performed. Subject Areas are developed in a manner that provides sufficient operating instructions for most activities. However, C-AD management via the DOE Conduct of Operations Agreement is required to operate the accelerator complex using facility specific procedures and a Departmental chain of command. Procedures provide C-AD and prototype ERL managers with a critical management tool to communicate detailed expectations for how individual workers are to perform specific tasks. Internal technical procedures are bounded by the requirements established by the BNL Subject Areas. Technical procedures and checklists tend to follow the DOE Standard 1029-92, Writer's Guide for Technical Procedures. Departmental policy and goal-setting documents are also written in the form of procedures, and they follow this same Writer's Guide where applicable; however, they are more narrative in style.

Group leaders and technical supervisors are responsible for ensuring that employees under their supervision have appropriate job knowledge, skills, equipment and resources

necessary to accomplish their tasks. C-AD and Prototype ERL subcontractors and vendors are held accountable to implement this same practice.

The BNL Quality Management System, supplemented by C-AD procedures, provides processes for identifying and controlling items and materials to ensure their proper use and maintenance to prevent damage, loss or deterioration.

C-AD management has identified those processes requiring calibrated measuring and testing equipment. Item identification and control requirements are specified, when necessary, in appropriate documents, e.g., drawings, specifications and instructions. Materials undergoing tests or inspections are controlled to avoid mixing acceptable items with items of unknown origin or history, thus avoiding inadvertent use.

C-AD management delegates authority to all C-AD personnel to "Stop Work" to avoid unsafe work practices.

6.4. QA Activities That Impact Accelerator Maintenance and Operations

6.4.1. Design

The C-AD staff plans, develops, defines and controls the design of the Prototype ERL in a manner that assures the consistent achievement of objectives for productivity, performance, safety and health, environmental protection, reliability, maintainability and availability. Design

planning establishes the milestones at which design criteria, standards, specifications, drawings and other design documents are prepared, reviewed, approved and released.

The design criteria define the performance objectives, operating conditions, and requirements for safety and health, reliability, maintainability and availability, as well as the requirements for materials, fabrication, construction, and testing. Appropriate codes, standards and practices for materials, fabrication, construction, testing, and processes are defined in the design documentation. As indicated in 10CFR851, nationally recognized codes and consensus standards are used. If national consensus codes are not applicable because of experimental restrictions, then C-AD implements appropriate approved processes to provide equivalent protection. In this way, C-AD and Prototype ERL ensure a level of safety greater than or equal to the level of protection afforded by the national codes and standards.

Specifications, drawings and other design documents are used to represent verifiable engineering delineations, in pictorial and/or descriptive language, of parts, components or assemblies in the Prototype ERL. These documents are prepared, reviewed, approved and released in accordance with C-AD procedures. Changes to these documents are processed in accordance with the C-AD configuration management procedures.

6.4.2. Procurement

Personnel responsible for the design or performance of items or services to be purchased ensure that the procurement requirements of a purchase request are clear and complete. Using

the graded approach, potential suppliers of critical, complex, or costly items or services are evaluated in accordance with predetermined criteria to ascertain that they have the capability to provide items or services that conform to the technical and quality requirements of the procurement. The evaluation includes a review of the supplier's history with BNL or other DOE facilities, or a pre-award survey of the supplier's facility. C-AD personnel ensure that the goods or services provided by the suppliers are acceptable for their intended use.

6.4.3. Inspection and Acceptance Testing

The BNL Quality Management System within the SBMS, supplemented by C-AD procedures, provides processes for the inspection and acceptance testing of an item, service or process against established criteria and provides a means of determining acceptability. Based on the graded approach, the need and/or degree of inspection and acceptance testing are determined during the activity/item design stage. Inspection/test planning has as an objective the prompt detection of nonconformance that could adversely affect performance, safety, reliability, schedule or cost.

When required, acceptance and performance criteria are developed and documented for key, complex or critical inspection/test activities. If an item is nonconforming, it is identified to avoid its inadvertent use. These processes specify how inspection and test status are indicated either on the item itself, or on documentation traceable to the item.

The BNL Calibration Subject Area, supplemented by C-AD procedures, describes the calibration process for measuring and test equipment. Prototype ERL management identifies appropriate equipment requiring calibration. The calibration status is readily discernible and associated calibration procedures, documentation, and records are prepared and maintained. Calibrated equipment is properly protected, handled and maintained to preclude damage that could invalidate its accuracy. Measuring and test equipment found out of calibration is identified and its impact evaluated.

6.5. Management Assessment

The managers of the four C-AD Divisions periodically evaluate or "self-assess" the effectiveness of the C-AD organization and present their report to senior management. Through the C-AD Self-Assessment Program, a regular, systematic evaluation process has been established wherein C-AD assesses internal management systems and processes used to make fact-based decisions. For example, see the C-AD Assessment Web Page. The C-AD Self-Assessment Program extends to the operation of the Prototype ERL and includes such items as: performance measures; compliance checks; effectiveness evaluations; job assessments; surveys; and environment, safety and health walk-throughs. Strengths and opportunities for improvement are identified. Assessment results are documented and fed back to managers, and provide valuable input into the business-planning process.

C-AD's Environment Management System and Occupational Safety and Health (OSH) Management System and associated activities also undergo management review each year. In

addition, these management systems are reviewed by third-party registrars, and federal, New York State and County agencies. Together these reviews provide comprehensive and objective information used by C-AD management in establishing strategic direction and improving environmental and OSH performance.

6.6. Independent Assessment

Using the graded approach, C-AD management periodically evaluates the implementation of the BNL Management Systems, SBMS Subject Areas and Department-level procedures. This is done through reviews, assessments and/or other formal means. The C-AD QA Group performs these assessments. They include an evaluation of the safety and quality cultures in terms of the adequacy and effectiveness of the management structure, which includes, but is not limited to, environment, safety and health, security, quality, conduct of operations, and training requirements.

Individuals verifying these activities have sufficient authority to access work area, and organizational freedom to accomplish the following: identify problems, initiate, recommend, or provide solutions to problems through designated channels, and verify implementation of solutions.

All assessments are planned and conducted using established criteria. The type and frequency of these assessments are based on the status, complexity and importance of the work or process being assessed. The results are documented, non-conformances and recommendations

identified and presented to C-AD management. The Department develops corrective actions to promote improvement. Actions are tracked to closure by C-AD QA in the Family version of the BNL Assessment Tracking System (ATS). Those conducting independent assessments are technically qualified and knowledgeable in the areas assessed and are independent from the activities assessed. Where necessary, subject matter experts are involved in the assessments to give insight into a particular area.

In addition, peer review is a process used at C-AD by which the quality, productivity and relevance of science and technology programs is monitored and evaluated. In operational and ESH arenas, peer review is used to evaluate and independently verify engineering design and procedure implementation.

7.Post-Operations Planning

7.1. Structural and Internal Features that Facilitate Future Decommissioning/Dismantling

Concrete block was used to create the walls and labyrinths for the Prototype ERL. See the figure below. This concrete is re-usable and when not in use, it is stacked inside Building 912.

Additionally, significant portions of the following items are likely to be recycled or reused:

- Superconducting RF Cavity - The 5-cell SRF cavity may be used in RHIC. If C-AD does not use it in RHIC, the cryostat will still be useable.
- RF Systems for Superconducting Injector and Superconducting Cavity will be re-used.
- The laser system used for the Prototype ERL will be reused. Slight modifications may be needed if there are changes in the operating parameters. The same would be true for the

optical components. Neither the laser nor the optical components produce radioactive or hazardous waste.

- Cryogenic, vacuum, magnet and electrical hardware outside the accelerator enclosure will be re-used.
- The Prototype ERL electron beam dump system will be used as a spare for the RHIC electron beam cooler. The dump is made of Cu and 304L stainless steel; it has an Al support structure with G-10 insulators. Low levels of activation are expected.
- Beam instrumentation will be re-used.
- Conventional facilities (e.g., cables, electrical distribution panels, cable tray) will be reused.

7.2. Operations Considerations to Minimize the Generation of Radiological and/or Hazardous Materials

The C-AD participates in ISO 14001 registrations each year for environmental management and conducts a review of all existing process assessments and performs an initial assessment for each new process introduced in that year. Each assessment consists of the following topics:

- Detailed process descriptions and waste determination
- Regulatory determination of process outputs
- Waste minimization, opportunities for pollution prevention
- Assessment prevention and control for hazardous and radioactive materials

For example, the Prototype ERL closed-loop cooling water system transfers heat from the Prototype ERL magnets and cryogenic compressors to cooling water and then indirectly rejects the heat utilizing a heat exchanger to cooling tower #3 (see Figure 7.2). Cooling water from tower #3 directly rejects heat to air utilizing the cooling tower. Based on the process assessment, the following practices were implemented at Prototype ERL in order minimize the generation of and on-site storage of radioactive and hazardous materials:

- Water drained or otherwise collected from the Prototype ERL primary loop is collected in tanker trailers where it is stored for reuse/recycle, or evaporated or disposed of as radioactive waste
- No biocide or corrosion inhibitors are added to the Prototype ERL water system
- Spent filters are sent offsite for disposal as low-level radioactive waste every 1 to 2 years
- Spent deionizer resin is exchanged onsite approximately every two years and the resins are drummed, sampled and disposed based on sample analysis results

Figure 7.2 Prototype ERL Cooling Water Process Flow Diagram

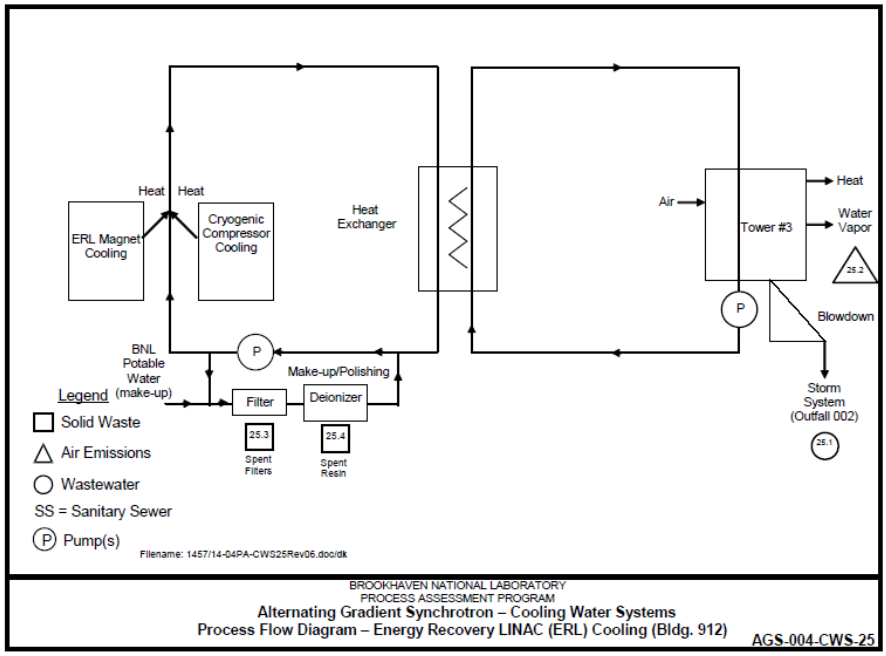

In addition to cooling water, this type of process evaluation is done for all Prototype ERL related operations that use or generate hazardous and radioactive materials including:

- Beam line construction and disassembly
- Magnet cleaning
- Electronic assembly
- Beam stops and collimators
- Materials storage
- Mechanical assembly
- Plating and tinning
- Cryogenic systems
- Vacuum systems
- Tech shop activities

7.3. Long-Term Records Management to Facilitate Post-Operations Activities

The following line-organization records are maintained to facilitate post operation activities:

ERL Records to Facilitate Post-Operations Activities

Topic
Occupational Health & Safety Management System Description
Occupational Health & Safety Management Plans
Risk Assessments Files
OSH Management Reviews And OSH Records Of Decision Documents
OSH Internal Assessments and Audits
WOSH Committee Records (Worker Safety Committee)
Training Records
Safety Committee Records
Local Emergency Planning Documents
Emergency Contingency Plans
Tier 1 Facility Safety Inspections
Safety Assessment Documents and Safety Analysis Reports
Work Planning And Control Documentation
Environmental Permits
Experimental Safety Reviews
Occurrence Reports
Operating Manuals
Safety Equipment Records
Records of Roles, Responsibilities, Authorities and Accountabilities for Employees
Process Assessments
Environmental Assessments
Cooling Water System Records
Maintenance Records

7.4. Waste Management of Radiological and Hazardous Material Generation During Post Operations Period

Waste management post Prototype ERL operations will be based on radiological conditions at the time of final shutdown of the Prototype ERL. The approach will factor in the effectiveness of the methods to achieve the desired end-point of the remaining facility. Much of the Prototype ERL facility, such as support buildings and control areas, do not have radioactive or hazardous materials and will require only standard waste management techniques. Based on the

projected low-levels of activation of beam line components, they will be able to be contact handled. A post operations waste management plan will be developed at the end of the Prototype ERL facility's life. The plan will address the conditions and hazards in detail and will have the benefit of additional information and waste management technologies not yet available.

8.References/Glossary/Acronyms

8.1. List of Documents that Provided Supporting Information for the SAD

8.1.1. Accelerator Safety Implementation Guide for DOE O 420.2, Safety Of Accelerator Facilities, Office of Science, Department of Energy, May 1999.

8.1.2. Accelerator Safety Subject Area

8.1.3.C-AD Conduct of Operations Matrix

8.1.4.C-AD Fire Hazards Analyses

8.1.5.OPM for C-AD

8.1.6. Radiological Control Manual

8.2. List of Acronyms

AC – Alternating Current

ACGIH – American Conference of Governmental Industrial Hygienists

ACS – Access Control System

AHJ – Authority Having Jurisdiction

AISC - American Institute of Steel Construction

ALARA – As Low As Reasonably Achievable

ANSI – American National Standards Institute

ASE – Accelerator Safety Envelope

ASME - American Society of Mechanical Engineers

ASSRC – Accelerator Systems Safety Review Committee

ASTM - American Society for Testing and Materials

ATS – Assessment Tracking System

AVS – American Vacuum Society

AWS – American Welding Society

BHSO – Brookhaven Site Office

BNL – Brookhaven National Laboratory

BSA – Brookhaven Science Associates

BTMS – Brookhaven Training Management System

C-AD – Collider-Accelerator

CA – Controlled Access

CAS – Collider-Accelerator Systems Watch

CEE – Chief Electrical Engineer

CFR – Code of Federal Regulations

CGA – Compressed Gas Association

CME – Chief Mechanical Engineer

CW – Continuous Wave

DC – Direct Current

DI – De-ionizer

DOE – Department of Energy

DOELAP – DOE Laboratory Accreditation Program

DOT – Department of Transportation

ECR – Environmental Compliance Representative

EMS – Environmental Management System

EPA – Environmental Protection Agency

ERL – Energy Recovery Linac

ES&F – Experimental Support and Facilities Division

ESH – Environment, Safety and Health

ESHQ – Environment, Safety, Health and Quality

ESRC – Experimental Safety Review Committee

ESSHQ – Environment, Safety, Security, Health and Quality

FHA – Fire Hazards Analysis

FPE – Fire Protection Engineer

FUA – Facility Use Agreement

HOM – Higher Order Mode

HSSD – High Sensitivity Smoke Detector

HV – High Voltage

HVAC – Heating, Venting and Air Conditioning

IOC – Input Output Controller

ISM – Integrated Safety Management

ISO – International Standards Organization

LE – Liaison Engineer

LEC – Local Emergency Coordinator

LOTO – Lock Out / Tag Out

LP – Liaison Physicist

MCNPX – Monte Carlo Neutron Photon Transport Computer Codes

MCR – Main Control Room

MLI – Multi-Layer Insulation

MPFL - Maximum Possible Fire Loss

MS – Management System

NEBA - Northeast Building Addition

NEPA – National Environmental Policy Act

NESHAP - National Air Emission Standards for Hazardous Air Pollutants

NFPA – National Fire Protection Association

NRTL – Nationally Recognized Testing Laboratory

NYS – New York State

ODH – Oxygen Deficiency Hazard

OPM – Operations Procedure Manual

ORPS – Occurrence Reporting and Processing System

OSH – Occupational Safety and Health

OSHA – Occupational Safety and Health Administration

P2 – Pollution Prevention

PCSS – Pressure and Cryogenic Safety Subcommittee

PE – Plant Engineering

PLC – Programmable Logic Controller

PPE – Personal Protective Equipment

QA – Quality Assurance

R2A2 – Roles, Responsibilities, Accountabilities and Authorities

RadCon – Radiological Control

RCT – Radiological Control Technician

RF – Radio Frequency

RFQ – Radio Frequency Quadrupole

RHIC – Relativistic Heavy Ion Collider

RSC – Radiation Safety Committee

RWP – Radiation Work Permit

S&T – Science and Technology

SAD – Safety Assessment Document

SBC – Standard Building Code

SBMS – Standards Based Management System

SCDHS – Suffolk County Department of Health Services

SCFM – Standard Cubic Feet per Minute

SFPC – Standard Fire Prevention Code

SPDES – State Pollution Discharge Elimination System

SRF – Superconducting RF

TLD – Thermo-Luminescent Dosimeter

UL- Underwriters Laboratories

UPS – Uninterruptible Power Supply

WOSH – Worker Occupational Safety and Health

APPENDIX 1

Shielding Analyses

Simple Estimate of ERL Radiation
D. Beavis
August 1, 2006
Updated August 9, 2006

Simple estimates are made for the potential radiation sources in the ERL R&D test setup. The dose rates are based on thick target formulas for high Z targets. The dose rates should be a conservative estimate of the dose rates that could occur due to beam losses. The goal is to obtain an overall view of the shielding issues at an order of magnitude level.

3.5 MeV Electron Beam

Recently the maximum electron gun energy has been lowered from 5 MeV to 3.5 MeV. The potential radiation from beam losses can be estimated from thick target curves given in various references (see ref. 1). The numbers are given at 1 meter from a localized source.

3.5 MeV e- losses rad/(hr-kW)

0 degrees	$4*10^4$
90 degrees	$8*10^3$

The 3.5 MeV beam has a maximum power of 1000 kW. The beam will be transported to the beam dump. The dump must have local shielding to reduce this to levels that are appropriate for the shielding enclosure. The energy of this beam is too low to generate neutrons.

25 MeV Electron Beam

Recently the electron beam energy for the ERL ring has been lowered from 54 MeV to 25 MeV. Using the same reference and assumptions the dose rates at 1 meter are:

25 MeV e- losses rad/(hr-kW)

0 degrees	$8*10^5$
90 degrees	$8*10^3$

The beam energy is sufficiently high in energy to generate neutrons via giant dipole resonance. It will be assumed that the target material is iron. The neutrons are essentially isotropic. The dose rate at 1 meter is (see ref 2):

Neutrons rem/(hr-kW)
430

Non-Beam Sources

The electron gun and the 5-cell accelerating cavity will generate x-rays. The level of x-rays is uncertain but it is assumed that they will be capable of generating dose rates similar to the RF cavities at RHIC. The RHIC observed dose rate of **100 rad/hr at 1 meter** will be assumed.

Beam Losses

The 3.5 and 25 MeV beams are expected to operate with low routine losses. The 5 MeV beam will have a collimator, which will most likely require local shielding. The beam dump will be designed for absorbing the entire 1000 kW of 3.5 MeV beam. The routine loss is expected to be low after the collimator. The power supply system is capable of generating sufficient power to sustain a 1 MW accidental loss. However, large accidental losses may cause damage, which terminates the operation. It is not clear what limits on the beam losses will cause self-termination. Until a self-limiting mechanism is understood we will assume 1 MW can be sustained. Routine losses at unshielded locations are expected to be less than 1 W. The maximum sustainable loss of the 25 MeV beam has been established as 50 kW, which is the limit of the RF power supply. The 25 MeV beam is expected to have routine losses at least a 1000 times lower than the max. sustainable loss, i.e. 50 W.

It is proposed that two beam current transformers be used in differential mode to limit the level of routine losses for both the 3.5 MeV and 25 MeV beams. The first transformer will be located after the collimator in the 3.5 MeV transport. The second will be located in the 3.5 MeV transport to the beam dump. Comparing the difference will establish a net loss of beam in both the 3.5 and 25 MeV transports between the transformers. The plan is to have the configuration of this transformer system under the control of the access control group similar to the B20 transformers in the AGS. A specification will be prepared and presented to a vendor to see if it is achievable. It will be assumed that the system will be accurate for differences of 10^{-3} (conservative) and it is hoped that it will be capable of measuring differences of 10^{-6}. The table below summarizes (crudely) the present sustainable losses for the beams:

Beam (MeV)	Beam Power (kW)	Max. Sustainable loss (kW)	Max. Sustainable loss with transformer at10^{-3}
3.5	1 MW	1 MW	1 kW
25	10MW	50 KW	10 kW

We can use this table to generate the maximum sustainable radiation dose rates from beam losses. These numbers are summarized in the table below:

Dose rates at 1 meter in rad/hr (rem/hr for neutrons)

condition	Max. Loss	Max. Loss with transformer (10^{-3})	Routine
3.5MeV@ 0 deg.-ph	$4*10^{7}$	$4*10^{4}$	40
3.5MeV@ 90 deg.-ph	$8*10^{6}$	$8*10^{3}$	8
25 MeV@ 0 deg.-ph	$4*10^{7}$	$8.*10^{6}$	$4*10^{4}$
25 MeV @ 90 deg-ph	$4*10^{5}$	$8.*10^{4}$	$4*10^{2}$
25 MeV- neutrons	$2.1*10^{4}$	$4.3*10^{3}$	$2.1*10^{1}$

Radiation Through Shield Walls

The radiation levels outside the shield walls can be estimated using "tenth-value layers" (TVL) given for broad beams of electrons and neutrons on shielding material. For the photon shielding the values used for forward (zero-degree) shielding are (see ref. 3):

Energy-material	First TVL (gm/cm^2)	Equilibrium TVL (gm/cm^2)
3.5 MeV- Concrete	60	60
3.5 MeV- Fe	67	67
3.5 MeV- Pb	55	55
25 MeV- Concrete	120	110
25 MeV- Fe	85	85
25 MeV- Pb	60	60

For 25 MeV electrons the TVLs for concrete at 90 degrees are substantially smaller than above and are 85 gm/cm^2 for the first TVL and 80 gm/cm^2 for the following layers (see ref. 4).

The neutron TVLs for concrete (see ref. 5) that are used are 100 gm/cm^2 for the first TVL and 80 gm/cm^2 for all other layers.

The source terms need to be scaled to the expected dose rate at the shielding wall. A distance of 3 meters will be used for this purpose, which is an appropriate distance for the beam line close to the shield wall. This gives a reduction of 1/9. It is then assumed that the dose rate is constant across the portion of wall and the attenuation of the shielding is calculated using the TVLs. The concrete walls are 48 inches thick (287 gm/cm^2).

Dose rates outside 48 inch Concrete Shield (3 meters from source)

condition	Max. Loss	Max. Loss with transformer (10^{-3})	Routine
3.5MeV@ 0 deg.-ph	73 rad/hr	73 mrad/hr	0.07 mrad/hr
3.5MeV@ 90 deg.-ph	15 rad/hr	15 mrad/hr	0.01 mrad/hr
25 MeV@ 0 deg.-ph	13,000 rad/hr	2600 rad/hr	13 rad/hr
25 MeV @ 90 deg-ph	13 rad/hr	2.7 rad/hr	13 mrad/hr
25 MeV- neutrons	1.2 rem/hr	240 mrem/hr	1.2 mrem/hr

The present shielding coupled with the loss assumptions is not sufficient for the photons generated by the 25 MeV electron beam. The beam current transformer interlock and chipmunks outside the shielding probably provide acceptable protection for the other operating conditions. 2-4 orders of magnitude more attenuation for the high-energy photons is required. 10^{-2} attenuation in the forward direction requires 37 inches of concrete, or 8.7 inches of steel, or 4.3 inches of Pb. This would require a thicker shield wall or shielding placed close to the beam line to shield the forward losses.

The present shielding for 90-degree losses of the 25 MeV electron has an attenuation of $3*10^{-4}$. This will be useful for comparison with the attenuation through penetrations in the shielding.

Straight Penetrations Through the Shielding

A simple discussion of the attenuation of straight holes in shielding can be found in Sullivan (see ref. 6). For directional radiation the attenuation depends on the angle between the direction of the radiation and the axis of the hole. For the 90-degree losses most of the penetrations at the ERL R&D test area are at about 45 degrees (close loss) and 24 degrees (far loss). The attenuation for the smaller angle is less but the increased distance to the source also reduces the radiation. For the present discussion the data at 45 degrees will be used with the source evaluated at 3 meters. As can be seen from ref. 6 figures 2.25 and 2.26 the attenuation of neutrons and photons is similar for these angles and the attenuation given for hadrons in ref. 6 figure 2.27 will be used. In addition a formula for neutrons given by Goebel (see ref 7) is used. The attenuation for penetrations through the 48 inch shield wall are listed by the diameter area below:

Diameter (in)	Area (in^2)	Attenuation via Sullivan	Attenuation via Goebel
2	3	$1.2*10^{-3}$	$5.6*10^{-5}$
4	12	$7*10^{-3}$	$5*10^{-4}$
8	49	$4*10^{-2}$	$3.7*10^{-3}$
12	108	$1.1*10^{-1}$	$1.1*10^{-2}$

The Goebel formulation gives attenuations about a factor of 10 smaller than Sullivan. The Goebel formula appears to agree with the values of Sullivan at larger angles, about 75 degrees. For now we will use the more conservative number of Sullivan. The two-inch diameter penetration would have a dose rate about 4 times higher than the shield wall for 25 MeV electron large angle losses. This would probably be acceptable but is not a useful size. The larger holes could be acceptable provided personnel cannot occupy the area near the penetration exit. This simple treatment does not include contributions from reflections from surfaces. Many of the penetrations are near the ceiling and can obtain contributions from radiation reflecting off the ceiling.

Several of the straight penetrations are substantial in size and personnel can approach the exit of the penetration while the machine is operating. These are of special concern and are listed below:

Penetration	Area (in^2)
Cable tray into second floor	288
Wave guide for 5-cell cavity	90
Wave guide for RF-Gun	288

These penetrations are sufficiently large in area and short that they provide essentially no attenuation and require reconsideration. The cable tray port could be divided into distributed smaller ports. The wave-guides must remain the same dimension and therefore the only option to improve the attenuation is to make these penetrations as multi-legged penetrations. Where possible all penetrations should be multi-legged.

Multi-legged Penetrations

The attenuation of neutrons in a multi-legged labyrinth can be calculated using the formulation of Goebel. A penetration for the wave-guide with dimensions 8 inches high by 12 inches wide and with two 18-inch long legs and one 48-inch long leg has an attenuation for neutrons of $1.1*10^{-5}$. The attenuation of photons through the labyrinth should be smaller since the reflection coefficients are smaller for photons than neutrons (see ref. 8). The design of the bends must take into account the potential for neutrons or photons to penetrate through the walls of the bends and "short-circuit" the labyrinth ("punch-through").

There are 4 existing multi-legged labyrinths at present in the shielding. Personnel and equipment access ways are located at the north and south ends of the test area. A utility trench exits under the east and west walls at the south end of the area. The two access ways have been crudely estimated assuming they are 3-legged labyrinths with a factor of 4 to account for the increased size of the openings. The attenuation for each access way is a few 10^{-3} attenuation with a large error. When treated as a two-legged labyrinths the access ways have attenuations of a few 10^{-2} . The attenuations for photons should be lower as noted above. These should be evaluated more carefully in the future. The two trench exits are not calculated here since the geometry does not lend easily to a labyrinth formula. They need to be evaluated in the future or since they are not be used blocked with shielding.

Conclusions

Simple techniques have been used to make simplistic estimates of the dose rates due to beam losses in the ERL R&D test area. Most of these estimates can be considered conservative and offer a general guide for resolving the open issues in the shielding design. These estimates are not intended to replace detailed Monte Carlo calculations where needed. The main unresolved issues at present are the shielding of the photons in the forward direction, the straight penetrations, and the cracks (not discussed here).

References

1) NCRP Report No. 144, Figure 3.5.
2) NCRP Report No. 144, Figure 3.12, and a flux to dose conversion factor.
3) NCRP Report No. 144, Figure 4.1.
4) NCRP Report No. 144, Table 4.2.
5) W.P. Swanson, Radiological Safety Aspects of the Operation of Electron Linear Accelerators, 1979, Figure 52.
6) A.H. Sullivan, A Guide to Radiation and Radioactivity Levels Near High Energy Particle Accelerators, 1992.
7) K. Goebel et. al., "Evaluating Dose Rates Due to Neutron Leakage Through the Access Tunnels of the SPS", CERN LABII-RANote/75-10(1975).
8) NCRP Report No. 144, Figures 4.12 and 4.13.

The effectiveness of a Two-Foot Thick Inner Heavy Concrete Wall

D. Beavis
Dec. 11, 2006

The outside shield wall of the ERL test area is four feet of light concrete. This shield does not provide sufficient (ref. 1) attenuation for the potential radiation from forward faults of the 25 MeV electron beam. Various schemes have been suggested for introducing shielding close to the beamline for additional radiation reduction. In this note the effectiveness of using two feet of heavy concrete as an inner shield wall will be examined. It will be concluded that this should provide sufficient reduction of the radiation.

MCNPX (Ref. 2) can be used to estimate the dose due to photons. Azimuthal symmetry will be used for the problem. The front face of the target is placed 300 cm in front of the four feet thick light concrete shield wall. The 25 MeV beam strikes the front of the target with a direction perpendicular to the shield wall. Initial calculations are done with the existing light concrete wall and then a two feet thick layer of heavy concrete is added 1 meter from the target. The photon doses are tallied on the inner and outer surface of the light concrete wall.

The composition of heavy concrete was obtained by supplementing the composition of the light concrete with iron to achieve a density of 3.5gm/cc. The density for light concrete is 2.35 gm/cc. The compositions by atomic fractions are given in Table I.

Table I. Atomic Fractions

atom	Light concrete	Heavy concrete
H	0.135	0.107
O	0.6529	0.515
Si	0.1185	0.094
Al	0.0182	0.014
Ca	0.0754	0.060
Fe	0.0	0.21

The target used for the calculations was a steel cylinder with a radius of 2 cm and a length of 5 cm. Most materials close to the beam are similar in atomic number to iron so steel was a natural choice for the target material. The forward losses of electrons and photons typically have several inches of steel equivalent in their path due to the beampipe, quadrupoles, and dipoles. The sensitivity to the target geometry was examined and some results for the forward position (radius<15cm) on the inner surface of the light concrete shield wall are shown in Table 2. The dose at large distances can decrease as the target becomes thin and more of the electron energy is lost in the initial part of the concrete wall rather than the target. Although smaller targets can give higher radiation doses on the shield wall it was decided that the target parameters above were a reasonable approximation for the target mass.

Table 2. Photon Dose at R<15cm

Target Length (cm)	Target Radius (cm)	Rem per Incident electron
10	2	1.2E-14
5	2	4.4E-14
2.5	2	8.1E-14
1.5	2	1.1E-13
1.5	1	1.1E-13
1.5	0.5	1.1E-13
0.75	0.5	1.3E-13

The dose as a function of distance from the beam axis is shown in Figure 1. The data are averaged over radial bins ranging from 15cm to 50 cm in width. The red circles display the photon dose on the inner surface of the concrete wall. The green squares show the dose on the outside of the four feet of light concrete. The radial bin with R<15cm has the dose decrease by 0.0015 after 4 feet of light concrete. The blue triangles display the dose on the inner surface with the heavy concrete wall present. The dose for R<15 is reduced by 0.005. The application of concrete and steel TVLs would have given a reduction of 0.007 (see Ref. 1). The statistics in the simulation are not sufficient to extract the dose at the outer surface. The factor of 0.0015 from the light concrete can be used to estimate the dose for R<15cm on the outer surface to be 3.3E-19 rem/e.

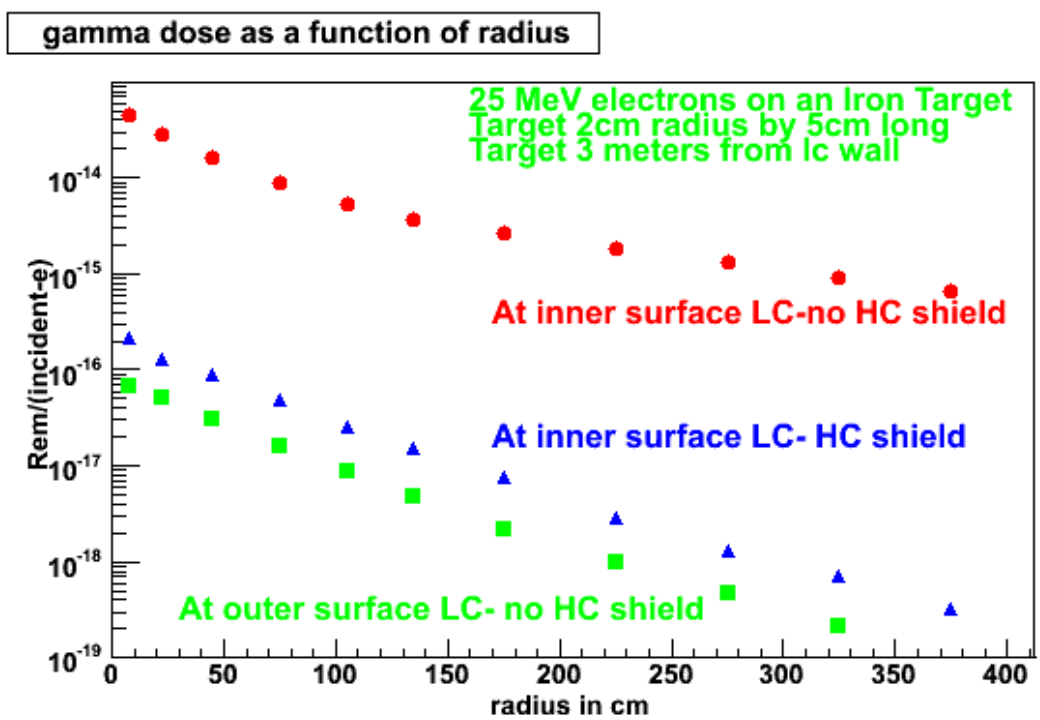

The dose rate can be estimated assuming a rate of beam loss. A 50kW beam loss (0.926 mA) has an estimated dose rate of 3000 rem/hr (R<15cm) for the configuration without the inner heavy concrete wall. This result compares well with a thick target formula with concrete TVL's, which would estimate 6600 rem/hr (Ref. 1 with geometry differences taken into account). The addition of the two feet of heavy concrete reduces the maximum dose to 15 rem/hr for a 50 kW beam loss. Most situations have the source of forward radiation at greater distance from the shield wall and have a non-zero angles to the shielding. The routine losses are expected to be at least 1000 times lower than a 50 kW loss.

9.Conclusions

A simple estimate of the dose rate outside the ERL test area sidewall shielding is made incorporating a proposed two-foot thick inner heavy concrete wall. The estimate of 15 rem/hr for a 50 kW beam loss would be within guidelines with chipmunks distributed to detect large beam losses. Actual beam loss configurations are expected to have reduced radiation due to increased distance and angles relative to the shielding. In addition, a 50 kW localized beam loss is not expected to be possible.

References

D. Beavis Memorandum, "Simple Estimate of ERL Radiation", August 9, 2006.
D. B. Pelowitz,Ed. "MCNPX User's Manual, Version 2.5.0", April 2005; version 2.5f was used for these calculations

Dose Rate Estimates for ERL Penetrations

March 26, 2008
D. Beavis

Introduction

Dose estimates for the penetrations in the ERL facility are provided. The estimates use a combination of simple source terms and estimates of the attenuation of the radiation as it propagates through the opening. The estimates provided in this document are intended to be crude order of magnitude estimates. Conservative assumptions are usually used so that the estimates represent upper limits for the potential dose rates. The low-intensity commissioning process of the RF-gun, five-cell cavity, and transport of the low energy and high energy electron beams will be used to verify the source terms and radiation transport through the shielding and penetrations.

Figure I is a plan view of the shielded area of the facility. There are approximately 20 penetrations through the external shielding. Two of these penetrations are used for personnel and equipment access. Several of the penetrations are buss blocks containing several dozen small penetrations for access of utilities. Other penetrations are intended for electrical cables, cryogens, gas exhaust, laser beam, etc. The overall features are a superconducting RF gun, a five-cell superconducting energy recovery linac (ERL), low energy beam transport to the beam dump, and the 25 MeV electron ring. The side walls are composed of between four and eight feet of light concrete. The thin sections of wall are shadowed from the potential sources with inner shield walls located appropriately. The entire facility has a single layer of light concrete roof beams four feet thick, except for a transition region where the roof is two layers of roof beams. This transition region is where the 13 foot ceiling height in the center is reduced to 9 feet at both ends.

There are restrictions on access for the facility areas. Access into the machine area is prevented by dual interlocks when the machine is operational. This includes the operation of the electron beams, the RF-Gun and five-cell cavity. Personnel will not be allowed on the roof during operations. Personnel will not be allowed in the 1 megawatt power supply room during operations. A substantial area between the adjacent experimental building and the ERL shielding on the west side will be fenced and locked with personnel excluded during operations or with limited access.

The radiation sources are predominately x-rays and gamma rays. The 25 MeV electron beam is capable of generating neutrons. Only in conditions where substantial high-Z shielding materials have been used or where it takes many bounces for radiation to get through a penetration is it possible for the neutron dose rates to dominate the x-ray dose rates.

The shielding is evaluated for two types of exposures, chronic and fault conditions. As will be discussed below the dose rates during fault conditions are typically many orders of magnitude larger than that of the chronic (routine) conditions. The penetrations will not be considered for the chronic dose to personnel since the areas around the penetrations are typically not occupied

and they can be posted for localized elevated dose rates. The penetrations are considered as an issue for dose to personnel during a fault condition.

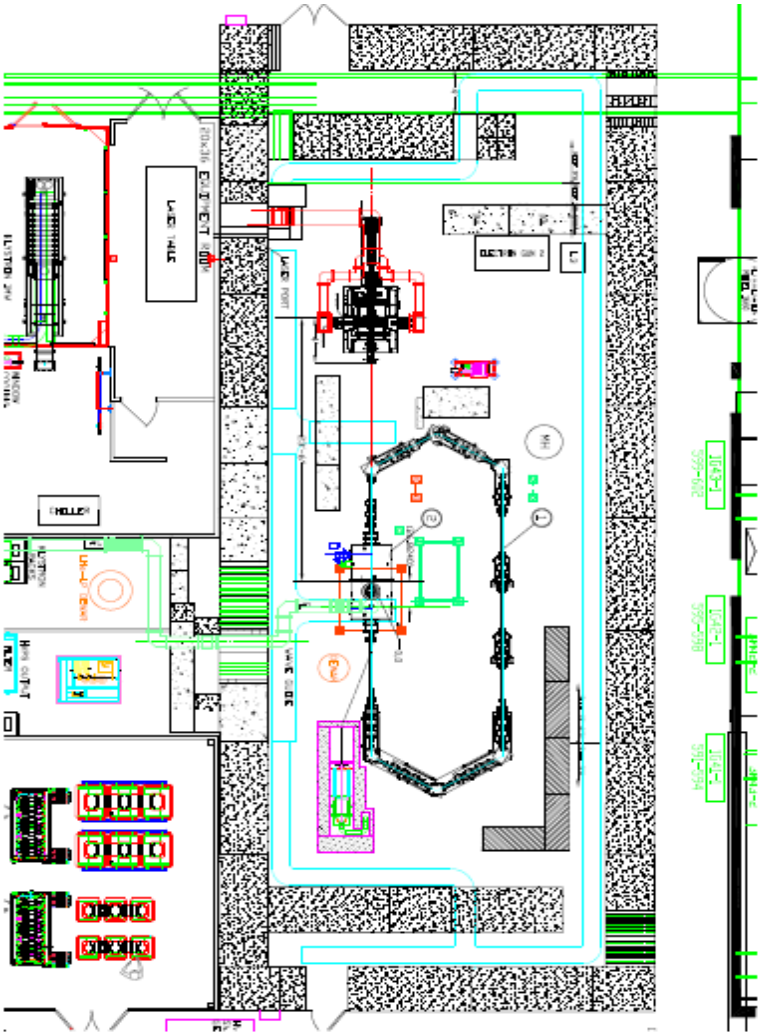

Figure I. Shielded ERL Area

All areas near the ERL shielding should be posted at least as a Radiation Area, TLD Required. Any unplanned exposure exceeding 100 mrem is a DOE reportable occurrence. This establishes an upper limit of exposure to personnel during an unexpected fault condition. Large dose rates caused by unusual operating conditions will be detected by radiation monitors (chipmunks) distributed around the area. These devices are coupled with the interlock system and will terminate the radiation in 1 to 9 seconds depending on the level of radiation at the detector. **This establishes an upper dose rate of between 40 and 360 rem/hr depending on the duration of the fault for areas that can be occupied by personnel.**

Radiation Source Terms

The four sources of radiation in the area are the RF-Gun, beam losses of the low-energy (E_k<3.5 MeV) electron beam, the five-cell cavity, and beam losses of the high-energy electron beam (E_k<25 MeV). Most of the calculations used in this note will use the source terms discussed in reference 1, which were based on formulas and figures from references sited in that note. In some cases more detailed calculations are used. The source terms used are conservative. The commissioning process will provide a check on the source terms and the effectiveness of the shielding.

The RF gun and the five-cell cavity can generate copious x-rays. No modeling has been conducted for the RF gun and the five-cell cavity in terms of the x-ray generation, but experience from other systems can be used for guidance. When these devices are commissioned, careful attention will be given to the measurement of their potential to create x-rays. The conditioning of the cavities will cause the largest x-ray generation from the cavities. The five cell cavity is expected to be able to absorb 100 to 1000 watts from electron emission before boiling too much helium and becoming normal. The voltage difference that the electrons cross will typically be less than the gradient of a single cavity, 5 MV. Only a few electrons would be accelerated across several cavities. It is assumed that **all the electrons are at 3.5 MeV with a maximum conditioning loss of 250 W**. It is expected that the **routine loss is less than 10 W** for the five cell cavities. **We will assume that the RF gun has the same limits**. The methods discussed in reference 1 can be used to estimate the 90-degree radiation, using thick target formulas. The expected dose rates for commissioning and routine operations are:

Cavity x-rays assuming 3.5 MeV

cavity	Conditioning (250W) rem/hr at 1m	Routine (10W) rem/hr at 1 m
Five-cell	2000	80
RF-gun	2000	80

The maximum kinetic energy of the x-ray gun is 3.5 MeV. It is expected that it will typically operate at a lower kinetic energy. The rule of thumb[2] for 0 degree radiation in this energy region is that it grows as the energy squared at fixed power. Therefore using 3.5 MeV represents a conservative figure.

3.5 MeV e- losses rad/(hr-kW)at 1 m

0 degrees	$4*10^4$
90 degrees	$8*10^3$

The source terms for electron losses at one meter for 25 MeV electrons are (an approximate value for 30 degrees has been added):

25 MeV e- losses rem/(hr-kW) at 1 m

angle	gamma	neutron
0 degrees	$8*10^5$	430
30	$8*10^4$	430
90 degrees	$8*10^3$	430

The dose rates for beam losses at 3.5 MeV and 25 MeV given above are based on high-Z thick target formulas or curves and are a conservative estimate. The radiation from actual losses can be up to a factor of 10 lower than the above estimates.

Reference 3 estimated the dose from a 25 MeV electron beam loss in the near zero degree direction to be 9000 rad/hr at 3 meters with 2 feet of heavy concrete between the source and the point of interest with a 50 kW loss. This will be used for locations where an inner shield wall (see Figure I) acts as a shadow for the 25 MeV beam losses.

The routine beam losses and maximum credible beam losses are needed to estimate the potential dose from chronic sources and for unusual conditions. The **maximum sustainable beam loss that the 5 cell cavity can support is 50 kW**, which is limited by the power supply. Many people believe that the **maximum local loss that can occur is between 10-100 W before the machine is damaged and shuts down**. The ERL will have machine protection devices to limit the losses to avoid equipment damage. However, no demonstrated mechanism to limit the beam loss has been demonstrated so a **50 kW limit is used for the 25 MeV electron beam**. The facility will have several chipmunks distributed at key locations to limit the duration of the beam faults. A 50 kW loss is probably appropriate to apply for short durations appropriate to the time required for the interlocks to stop the beam, which is typically 1-10 seconds depending on the dose rate at the chipmunk sensing the radiation. The 50 kW is considered conservative.
Routine losses are expected to be less than 10 W.

The **3.5 MeV beam has a power limit of 1 MW**. This power can be placed in the water cooled beam dump, which has local shielding. Again it is not expected that the machine can survive a large beam loss at any location, except the beam dump. The beam dump has a shielding criteria that it will represent less than a routine loss and is not considered for the penetration in this note. An **arbitrary maximum limit of 1 kW (10^{-3}) is assumed** without justification in this analysis. **A routine loss of 10 W (10^{-5}) or less is expected.** Any routine loss higher than this will be reviewed for the possible addition of local shielding.

Table I provides a summary of the source intensities used for fault conditions and routine operations. These are expected to be conservative and checked during the commissioning process.

Table I. Dose Rates for Routine and Maximum Losses

Condition	**Dose rate (rem/hr) at 1 meter for Max. sustainable loss**		**Dose rate (rem/hr) at 1 meter for Routine loss**	
	Gamma	Neutron	Gamma	Neutron
RF GUN	2000		80	
5-cell Cavity	2000		80	
3.5 MeV-0 deg.	$4*10^4$		$4*10^2$	
3.5 MeV-90 deg.	$8*10^3$		$8*10^1$	
25 MeV-0 deg.	$4*10^7$	$2.15*10^4$	$8*10^3$	4.3
25 MeV-30 deg.	$4*10^6$	$2.15*10^4$	$8*10^2$	4.3
25 MeV- 90 deg.	$4*10^5$	$2.15*10^4$	$8*10^1$	4.3
25 MeV-0 deg. 2ft HC at 3 meters from source	$9*10^3$		0.18	

The dose rate through a penetration is estimated by scaling the dose rate of Table I with 1/(r*r) to the entrance of the penetration and then applying an attenuation factor for the penetration. The attenuation for neutrons can be estimated using empirical formulas such as those presented in references 4 and 5. Typically the attenuation for gammas in multi-legged labyrinths is lower than neutrons, but the neutron formulas do not typically apply to gammas. For gammas, reflection coefficients are used for the surfaces of the labyrinths. This technique can also be applied for neutrons but is limited in applicability. Curves in Sullivan[4] are used for straight penetrations unless otherwise stated.

Some penetrations are shadowed by shielding. The entrance dose for the penetration has a component of radiation that arrived at the penetration by reflecting off surfaces to avoid the shadow shield. Another component of the entrance dose penetrates through the shadow shielding and then travels to the penetration. The TVLs from reference 1 and reference 8 are used[9] to calculate the attenuation of the radiation by the shield.

Laser penetration

The laser penetration is a straight hole through the shielding to allow for the transport of the laser beam to the RF gun. The penetration is 3 inches by 4 inches and is about one foot above the floor. It is located underneath the 1 MW wave guide shown in Figure 1. An enlargement of Fig I for this area is provided in Figure II. The arrows in Fig. II show potential sources for several penetrations. The 5-cell cavity is shadowed by the inner-shield wall and will not be considered as a source. Locations that represent the largest possible dose rates have been used for the analysis. The equivalent of two feet of heavy concrete will shadow the laser penetration from any radiation that could arrive directly from the potential sources. The two feet of heavy concrete provides attenuations from $1.5*10^{-2}$ to $3.2*10^{-4}$. Dose rates at the entrance to the laser port are given in the Table II below.

Table II: Laser port entrance Dose rates

Condition	**Distance (m)**	**Max. dose rate (rem/hr)**		**Routine Dose rate (rem/hr)**	
		Gamma	Neutron	gamma	Neutron
RF Gun	3.3	0.06		0.002	
3.5 MeV e	4.3	1.4		0.014	
25 MeV e-90 degree	7.3	25.5	3.9	0.005	0.0008
25 MeV e-30 degree	12	420	1.4	0.08	0.0003

The radiation can also enter the laser penetration from the side wall after one or more reflections. The details of the area are not sufficiently complete to evaluate the attenuation at this time. The design of the shielding will ensure that the exit dose rate for radiation that circumvents the shielding will be less than the dose rate for the punch through contribution.

The approximate value of the attenuation of this penetration is $5*10^{-3}$ based on figures 2.25, 2.26, and 2.27 of Sullivan. The exit dose rates are given in the table below.

Table III: Laser port exit Dose rates

Condition	**Distance (m)**	**Max. dose rate (mrem/hr)**		**Routine Dose rate (mrem/hr)**	
		Gamma	Neutron	gamma	Neutron
RF Gun	3.3	0.3		0.01	
3.5 MeV e	4.3	1.2		0.01	
25 MeV e-90 degree	7.3	128	20	0.03	0.004
25 MeV e-30 degree	12	2100	1.4	0.4	0.001

There are several comments that are worth noting. The highest gamma dose rate does not come from the same location as the highest neutron dose. These cannot be added since this would represent to beam losses at twice the maximum. Since one is looking for order of magnitude estimates it is not important to add these for a fault condition and the error will be smaller than the accuracy of the calculation. The routine dose rates are small and will not be presented throughout this note. The maximum dose rates can be scaled using Table I to obtain the routine/chronic dose rates. The chronic rates assume that the entire routine beam loss occurs at the worst possible location for the penetration being considered, which is an over estimate.

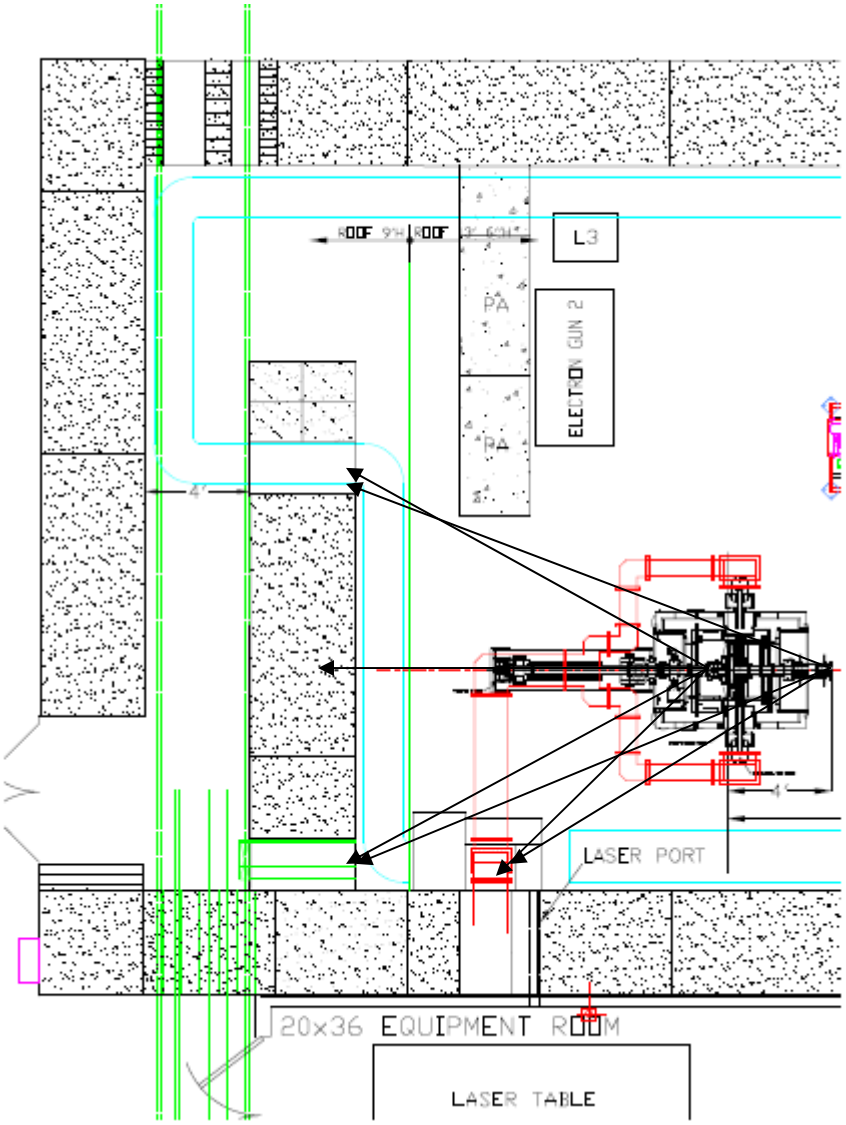

Figure II. Plan view of South section of ERL Area

I MW Waveguide Penetration

The penetration for the 1 MW waveguide is a two legged labyrinth. An elevation view is shown in Figure III. The cross sectional area of the first (second) leg is 2ftx2ft (1ftx2ft). The length of the first (second) leg is 2.9 ft (4 ft). The radiation has two pathways to get to the exit of the port.

Two-feet thick heavy concrete shadows the opening in the main concrete shield wall from the x-ray and neutron sources. The gamma radiation can penetrate the heavy concrete and shine into the second leg. The attenuation factors are the same as those used for the laser penetration. The distance to the source will be assumed to be the same as the laser port at lower elevation, which means the entrance dose rates for radiation "punching-through" the heavy concrete is the same as the laser port. An attenuation factor of 0.1 for the hole in the shielding is used from reference 4.

The exit dose rates for radiation punching through the heavy concrete are given in the Table IV below:

Table IV: 1 MW Waveguide Exit Dose Rates for punch-through

Condition	**Distance (m)**	**Max. dose rate (mrem/hr)**		**Routine Dose rate (rem/hr)**	
		Gamma	Neutron	gamma	Neutron
RF Gun	3.3	6		0.2	
3.5 MeV e	4.3	140		1.4	
25 MeV e-90 degree	7.3	2550	390	0.5	0.08
25 MeV e-30 degree	12	42,000	140	8	0.03

The contribution for the dose for neutrons propagating through the two-legged labyrinth can be estimated using the attenuation formulation of Goebel[5]. An approximate attenuation of $1.0*10^{-3}$ is obtained for the neutrons. The gamma attenuation is estimated using the reflection coefficients. An area for the first scatter of 20 ft^2 is used with a reflection coefficient of $3*10^{-3}$ and a distance of 5 feet. An area of $4ft^2$ is used for the second scatter along with a distance of 5 feet and a reflection coefficient of $3*10^{-2}$. A net attenuation of $1.2*10^{-5}$ is obtained for the gammas.

Table V: 1 MW Waveguide Exit Dose Rates –as Labyrinth

Condition	**Distance (m)**	**Max. dose rate (mrem/hr)**		**Routine Dose rate (mrem/hr)**	
		Gamma	Neutron	gamma	Neutron
RF Gun	3.3	2			
3.5 MeV e	4.3	5		0.05	
25 MeV e-90 degree	7.3	90	400	0.02	0.08
25 MeV e-30 degree	12	330	149	0.07	0.03

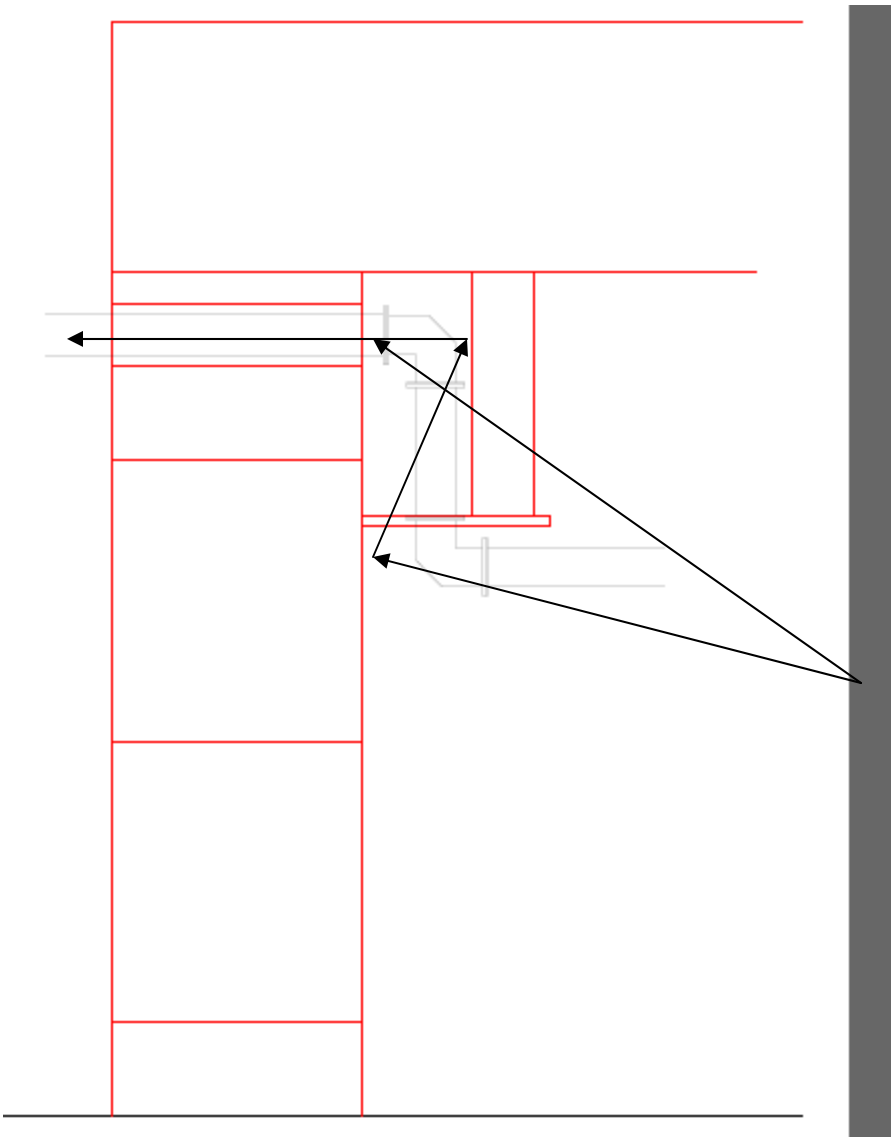

Figure III. 1 Megawatt Waveguide Penetration

Cryo Ports

Five 1ft by 1 ft penetrations exist at the top of the back wall for cryogenics. These ports are straight penetrations. The present plan is to close several of the port with packing block. They will be available in the future for use as utility ports if necessary. One port already has vacuum jacketed cryogenics piping in it. This pipe extends nearly to the adjacent building. Another port will be used for a vent, which will have an elbow immediately outside the shield wall. One port may be used for a few utility pipes and will be packed with shielding. Table VI shows the dose rates at exit of the ports assuming no packing, no shadow shields, and no credit for the shielding provided by the pipes:

Table VI: Cryo Ports Exit Dose Rates

Condition	**Distance (m)**	**Max. dose rate (mrem/hr)**		**Routine Dose rate (mrem/hr)**	
		Gamma	Neutron	gamma	Neutron
RF Gun	6.2	21,000 (470)		840 (19)	
5-cell cavity	6.2	21,000 (470)		840 (19)	
3.5 MeV e	6.2	84,000 (1900)		840 (19)	
25 MeV e-90 degree	3.2	3,800,000 (84,000)	200,000 (4400)	760 (17)	40 (0.9)
25 MeV e-30 degree	5.3	2,800,000 (63,000)	73,000 (160)	560 (12)	15 (0.3)

The worst cases were used for the estimates. The area between the shield wall and the EEBA building is intended to be a fenced area to keep personnel away from these ports. The edge of the building is seven feet away. If we assume the radiation exiting the hole is uniformly diffused over a cone of half-angle of 45 degrees then the radiation levels in the adjacent building will be a factor of 45 lower. **The numbers in parenthesis are the dose rates in the adjacent building** directly across from the port at a height of 12.5 feet.

The ports shall be modified to reduce the fault dose rates by a factor of at least 10. For a port using a steel shielding plate this requires 4 inches (10cm) of steel. For ports that are made smaller the area should be at least a factor of 9 smaller to reduce the radiation more than a factor of 10.

North Personnel Labyrinth

There are several aspects of this area that need to be considered. Figure IV shows a detail of the north labyrinth area. The north-west corner of the labyrinth has a buss block with penetrations to the outside. There is a cable port that acts as a short cut to the labyrinth about 10 feet from the gate. In addition the radiation that penetrates through the inner concrete wall then can enter the labyrinth close to the gate. In the final design the dump shielding shadows the gate entrance from the ring losses. Presently there is a two-foot thick iron shield in that location. Finally, the labyrinth can be treated as a four-legged labyrinth.

Direct radiation is shadowed from striking the buss block area. The near zero degree gamma radiation can arrive at the buss block area with two reflections. Using reflection coefficients the gamma dose would be expected to be reduced about $3*10^{-5}$ from that of the source at a meter. Using the penetration curves from Sullivan one would expect a reduction of another $3*10^{-3}$ for the radiation exiting the port. This gives a net reduction of 10^{-7}. **A beam loss of 50 kW at 25 MeV produces a gamma dose rate of 4 rem/hr**. The routine dose rate is expected to be less than 1 mrem/hr. This is not expected to be an issue. A chipmunk should limit the losses well below 50 kW anywhere in the 25 MeV ring and if desired the area outside the buss block can be part of the exclusion area needed for the cryogenics penetrations that have been discussed earlier. **The neutron dose rate exiting the buss blocks is estimated to be 100 mrem/hr for a 50 kW beam loss close to the labyrinth opening**.

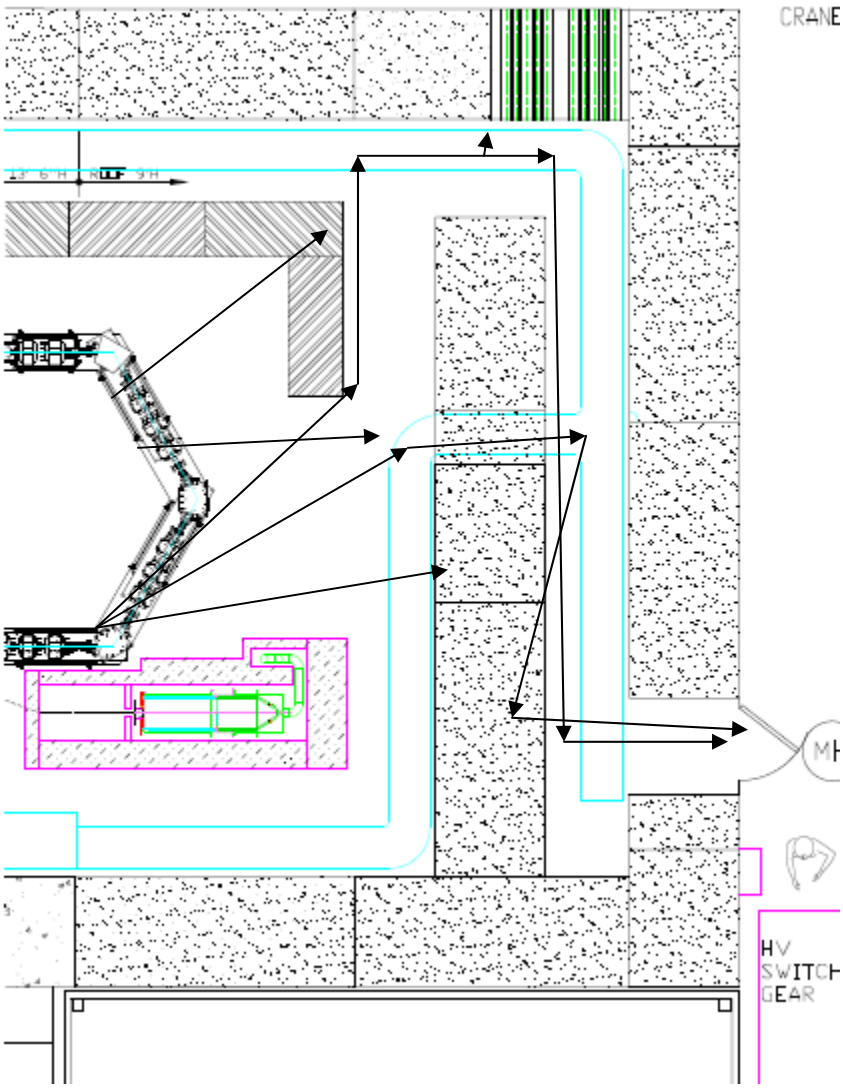

Figure IV. The Area of the North Personnel labyrinth

The radiation can also get to the ports in the buss block by penetrating the inner two-foot thick iron shield wall. The shield wall will provide an attenuation of $3*10^{-6}$ for forward gammas, ignoring the additional reduction due to the angle through the shield. The gamma dose is negligible when the port attenuation is taken into account. The reduction for neutrons, Ignoring the angle through the steel, is $9.3*10^{-3}$. **The neutron-dose rate exiting the port would be 25 mrem/hr from this contribution**. In reality, the additional distance through the steel would reduce the neutrons another factor of ten.

The north labyrinth can be treated as a four-legged labyrinth using the formulation of reference 5 to obtain the dose rate for neutrons at the gate. The attenuation for neutrons is 10^{-5}. The neutron entrance dose rate into the labyrinth is 75 rem/hr when a 50 kW beam loss occurs near the entrance. The **exit neutron dose rate at the gate is less than 1 mrem/hr for the 50 kW loss**. The routine loss is negligible.

The gamma and x-rays traveling through the labyrinth require at least 5 bounces to get to the exit gate. The maximum reflection coefficient[6] for 0.2 to 10 MeV gammas is .04. Using this fixed value for 5 bounces an attenuation of 10^{-7} is obtained without taking credit for the reduction due to distance. The zero degree gamma dose is very peaked in the forward direction. A crude estimate of $8.2*10^5$ rad/hr is used for the entrance dose averaged over the opening of the labyrinth. **The 50 kW beam loss produces an exit gamma dose of 80 mrem/hr at the gate.**

The zero-degree radiation can penetrate the shield wall to the west of the gate. The radiation would require two bounces to get to the gate. The peak dose rate penetrating the 4 feet of light concrete has about 1350 rad/hour for gammas 50 cm off axis of the zero beam[7]. Using an effective area of 28 ft^2 and the reflection coefficients a **gamma dose rate at the gate of 28 mrem/hr is obtained for a 25 MeV beam loss of 50kW.**

The neutrons penetrating the inner shield wall can be calculated using TVLs. A neutron dose rate of 2.7 rem/hr would exist at the light concrete wall. The transport to the gate can be estimated as a two legged labyrinth with an attenuation of $2*10^{-2}$. An additional factor for the source size to the width of the isle, about a factor of four, should be incorporated. This results in a **potential neutron dose rate at the gate of 250 mrem/hr neutrons for a 50 kW beam loss.**

Cable tray that penetrates the wall about 8 feet from the gate will allow neutrons and gammas to get to the gate without going through or around the inner shield. The dose is calculated at the exit the cable port and then transported using the two-legged labyrinth formula for neutrons and 2 bounces for gammas. **The dose rates at the gate are 1.8 rem/hr neutrons and 260 mrem/hr gamma for a 50 kW beam loss.**

The various paths of radiation for the same loss location to the gate are additive. The contribution of the cable tray penetration through the inner shield wall contributes the largest portion of the dose.

South Personnel Labyrinth

The south personnel and equipment labyrinth has pathways for radiation to reach the gate as well as penetrations from locations in the labyrinth to the outside. These will be examined similar to the north personnel labyrinth.

The labyrinth can be viewed as a four legged labyrinth. For neutrons the attenuation of the labyrinth is $3*10^{-5}$. The closest neutron source from a scraping loss produces a neutron-entrance dose of 342 rem. **The expected neutron-exit dose is 10 mrem/hr for a 50 kW beam loss.**

Photons can strike the shielding wall and then be reflected into the labyrinth. It takes a minimum or four bounces for the photons to reach the gates. The photon reduction is of the order of 10^{-8} and even for a 50 kW beam loss the dose rates at the gate are well less than 1 mrem/hr. The maximum loss of the 3.5 MeV beam would create a few micro-rem/hr at the gate.

Photons and neutrons can punch through the wall behind L3 and reduce the effectiveness of the labyrinth. Using the results of reference 2 the photon dose at the light concrete is 336 rem/hr for

a 50 kW beam loss. Two bounces are required to get the photons to the gate. The **photon dose rate at the gate is estimated to be 200 mrem/hr for a 50 kW beam loss.**

For neutrons the shield wall behind L3 was treated as heavy concrete with an attenuation factor of 45gm/cm^2. The neutron dose rate at the light concrete wall is 6 rem/hr. Using a labyrinth formula this will produce a few mrem/hr of neutrons at the gate for a 50kW beam loss.

Photons can travel over the shield wall near L3 and strike the roof transition. With two reflections the photons can be at the light concrete wall. The estimated dose rate via this path is **235 rem/hr at the light concrete wall**. This is similar to the number reached above and is additive. The cable tray can allow some neutrons to get to the light concrete with only one bounce. The estimated dose rate is 70 rem/hr at the light concrete wall. These contribute to the **photon-dose rate at the gate for a total of 400 mrem/hr.**

Neutrons can take a similar path and are expected to produce a few tens of mrem/hr at the gate.

Both neutrons and gammas rays can penetrate the concrete wall opposite the gate and then shine on the gate. The Table VII below lists the results of the dose rate estimates:

Table VII: Radiation Penetrating the Shield Wall Opposite the Gate

source	Dose rate mrem/hr Fault (routine)
RF-gun	1.8
Gamma-3.5 MeV e	4.5 (0.5)
Gamma-25 MeV e; 90 degree	1,900 (0.4)
Gamma-25 MeV e; 30 degree	49,000 (10)
Neutron-25 MeV e	160 (0.03)

A shield block could be placed in the center of the e-ring to shadow this wall from the forward angle radiation and substantially reduce the potential dose. Since the results are conservative, it might be desired to wait for commissions and see if this area is an issue for operations.

The cable port opposite the gate is approximately 7 inches by 24 inches. It is shadowed with 24 inches of heavy concrete used to form the labyrinth for the 1 MW waveguide. The TVLs for the various particles and energies were used to reduce the radiation at the port entrance. An attenuation factor of 0.1 was used for the penetration. The dose rates at the gate are substantially smaller than the dose rate at the exit of the penetration. A factor of 0.1 was used and expected to be conservative. The ratio of the gate area to the cable port area is more than a factor of 50. The estimated dose rates at the gate are given in Table VIII below:

Table VIII: Radiation at the Gate from Nearby Cable Port

source	Dose rate mrem/hr Fault (routine)
RF-gun	0.4
Gamma-3.5 MeV e	0.9 (0.01)
Gamma-25 MeV e; 90 degree	960 (0.2)
Gamma-25 MeV e; 30 degree	2400 (0.5)
Neutron-25 MeV e	33 (0.007)

The cable port 10 feet from the gate is shadowed from all sources except the RF-gun and perhaps the 3.5 MeV electron losses near the RF-gun. X-rays of the level 34 rem/hr and 135 rem/hr can exit the cable port for the RF-gun and electron beam losses respectively. After two reflections these can contribute 1.6 mrem/hr (RF-gun) and 2.3 mrem/hr (3.5 MeV beam loss).

The south labyrinth has several penetrations that allow radiation to escape the shielding. There are two cable way penetrations on the west end of the labyrinth (see Fig. II). The larger hole is 11 inches by 17 inches and the smaller is 6 inches by 12 inches. Dose rate estimates for photons near the adjacent light concrete wall was previously estimated to total 600 rem/hr for a 50 kW beam loss at 25 MeV. An area of the wall (approx. 1ft by 8 ft) can shine out the hole with one bounce off the concrete wall. This would give an estimated 5 rem/hr at the exit of the hole. The 600 rem/hr also shines on the opening of the hole and will produce approximately 60 rem/hr at the exit. The numbers will be smaller for the other port. **A combination of access controls and shadow shielding are required to reduce the levels to acceptable levels**.

The photons can bounce into the trench and exit the shield wall on the west side. The 600 rem/hr would produce 6 rem/hr outside the shielding wall. **It is recommended that the trench be blocked as much as possible to reduce this dose.**

The photons can also bounce off the light concrete wall and exit the trench on the east side or through the buss block on the east side. The trench is estimated to have a photon dose rate of 2 rem/hr. The buss block holes would have a lower dose rate. **Again it is recommended that the trench be blocked as much as possible.**

ODH Port on the Roof

The roof over the beam dump and ring has a ventilation port. This port represents a large opening with dimensions of 2 feet by 4 feet. The port is constructed as a 3-legged labyrinth with a block shadowing the initial opening. The ODH port labyrinth is shown in Figure V.

The dose rate exiting the penetration should be compared to what is expected to penetrate directly through the four feet thick light concrete roof. Using the TVLs for light concrete we expect:

Table IX: Radiation Through 4 foot light concrete Roof

source	**Dose rate through roof at max. fault condition (mrem/hr)**
3.5 MeV RF Gun or Five-cell cavity	5
3.5 MeV e beam-photons	22
25 MeV e beam-photons	18,000
25 MeV e beam-neutrons	1,000

The neutron and gamma radiation can penetrate the 4 foot light concrete and then shine to the end of the labyrinth. These dose rates are lower than the adjacent roof since the shielding is the same thickness but the distance is greater and therefore is less than the adjacent roof given in Table IX.

The area under the air handling unit has a shielding path that is about 80 gm/cm^2 thinner. This would make the radiation levels 10 times higher than the adjacent roof if the extra distance is ignored. The dose rates would be of the order of **10 rem/hr neutron and 180 rem/hr gamma**. This area is blocked by the air handling unit.

For neutrons the port can be treated as a three-legged labyrinth. The attenuation is approximately 10^{-3}. The **neutron dose rate for a 50 kW beam loss is 4 rem/hr**.

It requires a minimum of three bounces for gamma rays to exit the ODH port. Similar to above a fixed reflection coefficient of 0.04 for each bounce will be used. Ignoring distances and areas a **gamma dose rate of 10 rem/hr** is estimated.

Holes on Roof Created by Lifting Fixtures

There are four holes on the roof formed by the roof elevation transition and the lifting fixture for the roof beams. These holes are 4 feet long and are approximately 0.4 ft^2 in area. Personnel are excluded from the roof when the sources or machine operating.

Using the figures in Sullivan (figures 2.24-2.27) an attenuation of $5*10^{-2}$ will be used for both neutrons and photons. The exit will be blocked with the equivalent of 1 foot of light concrete.

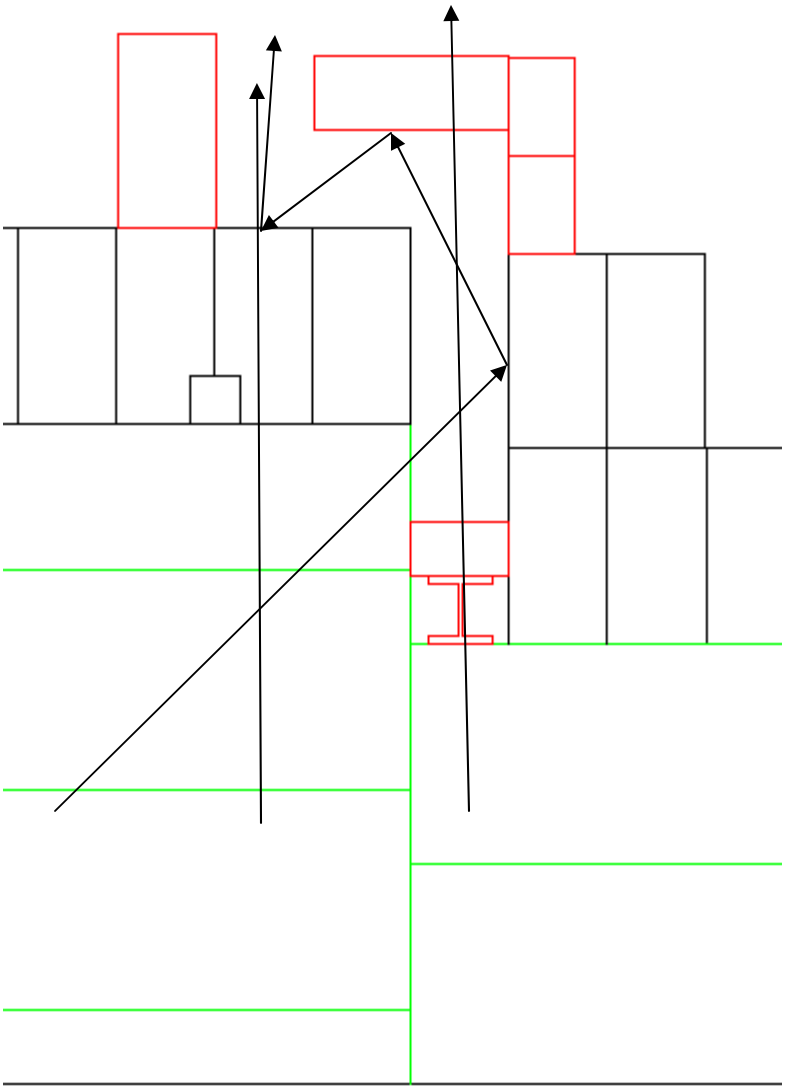

Figure V. Elevation View of ODH Port

This provides a reduction of 0.068 for low energy gammas and a reduction of 0.13 for high energy gammas and neutrons. The following results were obtained for worst case examples for the various sources and the holes:

Table X: Dose Rates at lifting Fixture Holes

Source	***Dose rate mrem/hr***	***Loss***
RF gun	520 (1)	2000 rad/hr at 1 m
3.5 MeV e	1,100 (2)	1 kW
25 MeV e; neutrons	3,800 (8)	50 kW
25 MeV e; gammas at 30 deg.	700,000 (1,400)	50 kW

The edge of the shield wall is at least eight feet away. The number in parenthesis is the expected dose rate at the shielding edge assuming that the radiation is uniformly distributed in a cone with a 45 degree opening half-angle.

Summary

Table XI provides a summary of the worst dose rates at each area for the gamma rays and neutrons. The maximum neutrons can come from a different source location than the gamma rays. In all cases, the maximum gamma dose rates are from the 25 MeV electron beam losses.

XI: Maximum Penetration Dose Rates

penetration	**Max. Gamma Dose rate (mrem/hr)**	**Max. neutron Dose Rate (mrem/hr)**
Laser port	2,100	20
1 MW Waveguide	42,000	400
Cryo Ports (5)	8,400 [1]	2000 [1]
North Gate	260	1800
North Labyrinth Buss Block	4,000 [2]	100
South Gate	49,000 [3]	160
Port in South Labyrinth (2)	60,000 [4]	600 [5]
West Trench	6,000	100 [5]
East Trench	2,000	1,600 [5]
South labyrinth buss block	100	300 [5]
ODH Vent	10,000 [6]	4,000 [6]
Lifting Fixture holes (4)	1,400 [7]	8 [7]
50 kW waveguide	28,000 [8]	1,000 [8]

Comments:

[1] Assumes that steel has been used to reduce the gamma rays by a factor of 10.
[2] This is directly outside the buss block. This may be in a fenced area.
[3] A shield block in the ring center would substantially reduce this number, if desired.
[4] At port exit which may be in a fenced area. Port may be packed in the future. This value is for the port with the highest dose rate of the two ports.
[5] Not presented in text.
[6] This is on the roof and is not allowed to have personnel.
[7] Evaluated at the edge of the shielding and not on the roof.
[8] The penetrations for the cables ports, water pipes and the 50 kW waveguide are presented in another note (see reference 10). The dose rates presented here are at a height of 12 feet above the floor.

All the dose rates in Table XI are sufficiently low that with appropriately placed radiation monitors to terminate the beam on large beam losses the exposure to personnel will be less than 100 mrem in a fault. Several of the larger dose rates can be reduced and some suggestions have been made in the text. Many of the large dose rate estimates are most likely very conservative and not expected to occur. The initial commissioning process at low currents will provide a check of the estimates.

The initial commissioning of the RF gun and five-cell cavity will provide an opportunity to examine the penetrations for x-rays at a much reduced level. One or two chipmunks are planned to be placed inside the shielded area to verify the source terms for the RF gun and five-cell cavity. The proposed test to run low intensity 25 MeV electrons into a flange at the north side before the ring is operational will also provide an early check on the shielding and penetrations.

There have been several suggested or assumptions to the shielding in this note. Table XII lists some of them for consideration:

XII: Suggestions for Penetrations

Area	**suggestion**
I MW Penetration	Check shielding meets assumptions
Laser penetration	Check shield meets assumptions
Cryo ports	Check shielding is added
Outside adjacent area to shielding	Define as radiation area
West side of shielding	Fence and lock when machine operational
South labyrinth penetrations on west side	Consider enclosing in locked area and adding shielding
Roof	Examine Roof access is properly prevented
Trench under shielding	Add some shielding to reduce dose rate and prevent access
South Gate	Consider block in center of ring to block forward radiation
Chipmunks-radiation monitors	Consider chipmunk locations to terminate large losses

References

1) D. Beavis," Simple Estimates of ERL radiation", August 9, 2008.
2) W.P. Swanson, Radiological Safety Aspects of the Operation of Electron Linear Accelerators, Technical Report Series No. 188, IAEA, Vienna, 1979.
3) D. Beavis, "The effectiveness of a two-foot Thick Inner Concrete Wall", Dec. 11, 2006. See figure 1 of the note.
4) A.H. Sullivan, A guide to radiation Protection and Radioactivity Levels Near High Energy Particle Accelerators, Nuclear technology Publishing, 1992. See figures 2.25, 2.26, and 2.27.
5) K. Goebel et. al., "Evaluating Dose Rates Due to neutron leakage Through the Access Tunnels of the SPS", CERN LABII-RA Note/75-10(1975).
6) NCRP Report No. 144, Radiation protection for Particle Accelerator Facilities, NCRP 2003. See figure 4.12
7) See reference 3 and the figure for the MCNPX calculation.
8) P.K. Job and W.R. Casey," Preliminary Radiological Considerations for the Design and Operation of NSLS II Storage Ring and Booster Synchrotron", NSLS II Technical Note No. 13, July 25, 06.

9) The attenuation lengths for ion and heavy concrete given in reference 8 have been converted to TVLs.
10) D. Beavis, "Estimate of the Radiation Exiting Penetrations for the ERL 50 kW Waveguide, Cable Buss Block, and Water Pipes", Dec. 6, 2006.

APPENDIX 2

ODH Calculations

Collider-Accelerator Department

BROOKHAVEN NATIONAL LABORATORY

Building 911-A
P.O. Box 5000
Upton, NY 11973-5000
Phone 631 344-5272
Fax 631 344-5676
rck@bnl.gov

managed by Brookhaven Science Associates
for the U.S. Department of Energy

Memo

Date: January 8, 2008 (Revised 6/16/08)

To: E. Lessard

From: R. C. Karol

Subject: ERL Oxygen Deficiency Hazard (ODH) Calculations

Purpose

To compute the appropriate ODH class for the ERL Cave in B912 and the ERL helium recovery building located just north of B912. Oxygen deficiency can be caused by a leak of cold helium or nitrogen fluid present in these buildings.

Summary and Conclusions

The goal of this calculation was to determine the Oxygen Deficiency Hazard (ODH) risk for the ERL Cave in B912 and the ERL helium recovery building located just north of B912 by computing the fatality rate for a major cryogenic fluid release. A spectrum of events may cause an oxygen deficiency. A major cryogenic system failure has been chosen to bound the consequences of all credible failures in the ERL Cave and the ERL helium recovery building as shown below. Spill rates are assumed to remain constant throughout the release. In addition, a catastrophic failure of a 500L cryogenic Dewar in the ERL Cave was examined.

Building	Free Volume	Bounding Cryogenic Leak Location	Spill Rate (SCFM) [Reference 1]	ODH Exhaust Fan Capacity (SCFM)
ERL Cave in B912	20,000 ft^3	Failure of 1-inch copper LN2 transfer line	3275	13,750
ERL Helium Recovery Building	9500 ft^3	Rupture of Kinney vacuum pump helium discharge line	1150	4,850

It is concluded that the ERL Cave and the ERL helium recovery building be classified as ODH 0 areas.

Applicable Criteria

The method and criteria in the BNL ODH Subject Area [2] was used to determine the ODH class for each ERL building.

ODH Model Description

The Fermi Model is a prescribed method to determine the necessary level of hazard control for a building having the potential for oxygen deficiency. The fatality rate in the model is the product of two numbers. One quantity is the probability per hour of an event causing an oxygen deficiency. The other quantity is found by estimating the minimum oxygen concentration during the transient, assuming instantaneous mixing of the air and inert gas in the building volume, and is represented by a factor between 0 and 1 (see Figure 1). The computed fatality rate is then used to define the ODH class necessary to protect personnel.

The Oxygen Deficiency Hazard fatality rate is defined as:

$$\Phi = PF$$

where Φ = the ODH fatality rate per hour
P = the expected rate of the event per hour, i.e. initiator frequency
F = the fatality factor for the event (Figure 1)

The value of P, the initiator frequency, is determined by using actual equipment failure rate data taken from the BNL SBMS subject area.

Figure 1. Graph of the Fatality Factor (logarithmic scale) versus the Computed Oxygen Partial Pressure.

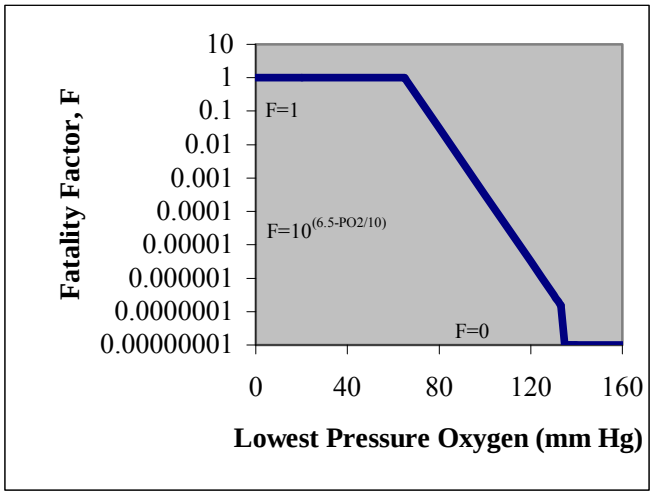

The value of the fatality factor, F, is the probability that a fatality will result if the inert gas release occurs. Figure 1 from the SBMS defines the relationship between the value of F and the computed oxygen partial pressure. The partial pressure is found by multiplying the mole fraction of oxygen in the building atmosphere by 760 mmHg. If the oxygen concentration is greater than 18% (~137 mmHg), then the value of F is defined to be zero. That is, all exposures above 18% are defined to be safe and do not contribute to fatality. If the oxygen concentration is 18%, then the value of F is defined to be 10^{-7}. At decreasing concentrations the value of F increases until, at some point, the probability of fatality becomes unity. That point is defined to be 8.8% (~67 mmHg) oxygen in the Fermi model, the concentration at which one minute of consciousness is expected.

The value of Φ, the fatality rate, is then used to determine the ODH class of the building as follows:

ODH Class	Fatality Rate (per hour)
NA	$<10^{-9}$
0	$\geq 10^{-9}$ but $<10^{-7}$
1	$\geq 10^{-7}$ but $<10^{-5}$
2	$\geq 10^{-5}$ but $<10^{-3}$
3	$\geq 10^{-3}$ but $<10^{-1}$
4	$\geq 10^{-1}$

The oxygen concentration in the building during a release of a gas is approximated by solving the following differential equations:

(a) If the exhaust fan is on and the spill rate of inert gas (R) is less than the exhaust fan capacity (Q):

$$V\frac{dC}{dt} = 0.21\,(Q - R) - QC$$

Where

V = building volume (ft^3)
C = oxygen concentration (mole fraction)
t = time (minutes)
Q = exhaust fan(s) flow rate (CFM)
R = inert gas spill rate into building (CFM)

Solving results in the following equation:

$$C(t) = 0.21\ [1 - R/Q(1-\exp(-Qt/R)]$$

(b) If the exhaust fan is off or if the inert gas spill rate (R) is greater than the exhaust fan capacity (Q):

$$V\frac{dC}{dt} = -RC$$

Solving results in the following equation:

$$C(t) = 0.21\ \exp(-Rt/V)$$

Assumptions

1. Building volumes were measured with appropriate corrections made for determining the free volume.

2. The ERL Cave exhaust fan starts 30 seconds after the cave oxygen concentration sensors fall to 18% and has a capacity of 13,750 CFM. This exhaust fan capacity is chosen to ensure that the oxygen concentration in the cave never falls below 16%.

3. The ERL helium recovery building currently has no exhaust fan but has oxygen sensors which alarm at 18% oxygen concentration. An alternative is examined with an exhaust fan capacity of 4,850 CFM to ensure that the oxygen concentration never falls below 16%. The fan is assumed to start 30 seconds after the oxygen sensor trips at 18%.

4. The helium and nitrogen spill rates, assumed to remain constant, were obtained from Reference 1.

5. Outside air drawn into the ERL Cave has a 21% oxygen concentration.

6. As per the SBMS model, the oxygen concentration in the building is found by assuming instantaneous mixing of the air and cryogenic gas in the building volume.

Detailed Calculation and Analyses

1. **ERL Cave ODH Calculation:**

In order to simplify the calculation for the ERL Cave by avoiding a detailed analysis of the cryogenic system failure rates, the following was done:

1) Using the worst case cryogenic fluid spill rate [1], the time for the cave oxygen concentration to fall from 21% to 18% was determined using:

$$t = -\ln (0.18/0.21)\ V/R$$

where:
V = the ERL cave free volume, 20,000 ft^3
R = the maximum spill rate of nitrogen into the ERL cave, 3275 CFM

This results in a time of 0.94 minutes.

2) Assuming that it takes 30 seconds from the time of oxygen sensor trip until the ODH exhaust fan is at full capacity, the fan will be exhausting 1.44 minutes after spill initiation.

3) With t = 1.44 minutes, the oxygen concentration drops to a 16.6% just as the exhaust fan reaches full capacity of 13,750 CFM. This fan capacity ensures that the oxygen never falls below the steady state value of 16%.

4) Using this minimum oxygen concentration results in a partial pressure of 122 mmHg and a Fatality Factor, F, of 2.2×10^{-6}.

5) Next the initiator frequency, P, which results in a Fatality Rate, Φ of $<10^{-7}$ is found. A Fatality Rate of $<10^{-7}$ corresponds to an ODH 0 classification.

$$P = \Phi/F$$

Solving yields an allowable initiator frequency of P = 0.045 per hr to maintain an ODH 0 classification. This means that this major LN2 leak into the ERL cave, other pressure boundary failures with lower spill rates and human error resulting in a release of inert gas in the ERL cave could occur every 22 hours and still allow the cave to be classified as an ODH 0 area.

6) This initiator frequency is obviously unrealistically high compared to a credible frequency. Thus, controlling the ERL Cave as an ODH 0 area is acceptable and appropriate.

Finally, a catastrophic failure of a 500L He Dewar in the ERL Cave is examined to verify that ODH 0 is appropriate for this failure. The expansion ratio for helium from liquid helium

at atmospheric pressure to room temperature helium gas at 70F is 754 [3]. Thus the released helium is 13,312 ft^3. Assuming perfect mixing of this release into the 20,000 ft^3 cave volume and ignoring any beneficial effects of the ODH exhaust fan, results in an oxygen concentration of 10.8%. The fatality factor at 10.8% oxygen is 1.96×10^{-2}. The probability of a Dewar rupture is 10^{-6} per hour [2], thus the Fatality Rate is 1.96×10^{-8} per hour. This is $<10^{-7}$ per hour so the designation of ODH 0 for the cave remains acceptable.

2. ERL Helium Recovery Building ODH Calculation:

The ERL helium recovery building ODH classification is first examined by finding the time for the oxygen concentration to fall to a level that would cause the room to exceed an ODH 0 classification without ant ODH exhaust fan. It is conservatively assumed that the initiating frequency for this event is once a year or 1.14×10^{-4} per hour. The assumed failure rate is very conservative since SBMS lists pipe-section rupture frequencies as ranging from 10^{-8} to 10^{-10} per hour. The once per year failure rate accounts for a burn-in period when ERL is first started up and prevents having to do a detailed failure rate study of the systems in the helium recover building.

1) Using the worst case cryogenic fluid spill rate [1], the time for the helium recovery building oxygen concentration to fall from 21% to 18% was determined using:

$$t = -\ln (0.18/0.21)\ V/R$$

Where:
V = the ERL helium recovery building volume, 9500 ft^3
R = the maximum spill rate of helium into the ERL recovery building, 1150 CFM

This results in a time of 1.3 minutes.

2) Conservatively assuming that the initiator frequency, $P = 1.14 \times 10^{-4}$ per hour means that F must equal 8.77×10^{-4} to have an ODH 1 classification.

3) If $F = 8.77 \times 10^{-4}$, then the corresponding oxygen concentration is found using:

$$F = 10^{(6.5-PO2/10)}$$
$$C = PO2/760\ (100)\ \%\ \text{oxygen}$$

Solving yields PO2 = 95.6 mmHg and C = 12.6% oxygen.

4) The time from the start of the accident to reach 12.6% oxygen is found to be 4.2 minutes.

5) Thus with the restraint to maintain the room posted as ODH 0, there is only 2.9 minutes to evacuate the building after the ODH alarm sounds. This may be

insufficient time to evacuate. The building has 2 doors and a footprint of 41' x 24' with three large equipment skids in the room.

As an alternative, an ODH exhaust fan having a capacity of 4,850 CFM is assumed. This alternative is necessary because the above scenario results in a low oxygen concentration and depends on a fairly rapid response time for the building occupants to escape. An exhaust fan capacity of 4,850 CFM was chosen to ensure that the oxygen concentration never falls below 16%.

1) From step 1 above it takes 1.3 minutes to trip the oxygen senor when the oxygen concentration falls to 18%.

2) Assuming that it takes 30 seconds from the time of oxygen sensor trip until the ODH exhaust fan is at full capacity, the fan will be exhausting 1.8 minutes after spill initiation.

3) With t = 1.8 minutes, the oxygen concentration drops to a 16.9% just as the exhaust fan reaches full capacity of 4,850 CFM. The oxygen concentration then slowly falls to a steady state value of 16%.

4) Using this minimum oxygen concentration results in a partial pressure of 122 mmHg and a Fatality Factor, F, of 2.2×10^{-6}.

5) Next the initiator frequency, P, which results in a Fatality Rate, Φ of $<10^{-7}$ is found. A fatality Rate of $<10^{-7}$ corresponds to an ODH 0 classification.

$$P = \Phi/F$$

6) Solving yields an allowable initiator frequency of P = 0.045 per hr to maintain an ODH 0 classification. This means that this major helium leak into the ERL helium recovery building, other pressure boundary failures with lower spill rates and human error resulting in a release of inert gas in the helium recovery building could occur every 22 hours and still allow the building to be classified as an ODH 0 area.

7) This initiator frequency is obviously unrealistically high compared to a credible frequency. Thus, controlling the ERL helium recovery building as an ODH 0 area is acceptable and appropriate.

This calculation was checked by Peter Cirnigliaro.

References

1. Email from Y. Than to R. Karol dated 1/8/08, ERL ODH Data
2. BNL Standards Based Management System Subject Area, ODH Classification/Controls
3. R.F. Barron, *Cryogenic Systems*, 2nd Edition, 1985, Oxford University Press, NY. Appendices B and D.

APPENDIX 3

C-AD Shielding Policy

From the C-AD SAD:

C-AD SAD Appendix 3 C-AD SAD Revision 2 8/2/04

Collider-Accelerator Department Shielding Policy

The main features of the shielding policy for C-AD facilities are currently delineated in the Collider-Accelerator Department Operations Procedure Manual.[1, 2] The principal components of this policy are reviewed here for completeness. The primary purpose of the shielding policy is to assure that all radiation related requirements and administrative control levels are satisfied. Specifically, the Collider-Accelerator Department's Radiation Safety Committee reviews facility-shielding configurations to assure:

1. Annual site-boundary dose equivalent is less than 5 mrem.
2. Annual on-site dose equivalent to inadvertently exposed people in non-Collider-Accelerator Department facilities is less than 25 mrem.
3. Maximum dose equivalent to any area where access is not controlled is limited to less than 20 mrem during a fault condition.
4. For continuously occupied locations, the dose equivalent rate is ALARA but in no case greater than 0.5 mrem in one hour or 20 mrem in one week.
5. Dose equivalent rates where occupancy is not continuous is ALARA, but in no case exceeds 1 rem in one year for whole body radiation, or 3 rem in one year for the lens of the eye, or 10 rem in one year for any organ.

In addition to review and approval by the Radiation Safety Committee, final shield drawings must be approved by the Radiation Safety Committee Chair or the ESHQ Associate Chair. Shield drawings are verified by comparing the drawing to the actual configuration. Radiation surveys and fault studies are conducted to verify the adequacy of any new or modified shield configuration. The fault study methodology that is used to verify the adequacy of shielding is proscribed by additional Collider-Accelerator Department procedures, which are not elaborated here.[3] Any modifications to shielding configurations are likewise closely proscribed. Each facility and experiment is assigned a Liaison Physicist and Liaison Engineer. The Liaison Physicist is responsible, in consultation with the Radiation Safety Committee where appropriate, for determining safe conditions for any shielding modifications. The Liaison Engineer is responsible for ensuring that the safe conditions are met, for effecting any modification, and for notifying other responsible Collider-Accelerator Department personnel, including the Operations Coordinator, as well as experimenters both prior to and on completion of the modifications. Additional procedures exist to ensure that policy with respect to control of radioactive shielding is implemented, which are not elaborated here.

---

[1] http://www.agsrhichome.bnl.gov/AGS/Accel/SND/OPM/Ch09/09-01-12.PDF Procedure for Review of Collider-Accelerator Department Shielding Design

[2] http://www.rhichome.bnl.gov/AGS/Accel/SND/OPM/Ch08/08-13.PDF Collider-Accelerator Department Procedure for Shielding/Barrier Removal, Removal of Primary Area Beam Line Components, or Modifications

[3] http://www.rhichome.bnl.gov/AGS/Accel/SND/OPM/Ch09/09-01-09.PDF Fault Study Procedure for Primary and Secondary Areas

APPENDIX 4

Accelerator Safety Envelope

Accelerator Safety Envelope

Title of Facility: Prototype Energy Recovery Linac (ERL)

Date of Initial ASE: June 30, 2008

Subsequent Revision Dates:

Version of the SAD that the ASE applies to: Prototype ERL SAD 6-30-08

Signature of Preparer:

_____

Signature of Collider-Accelerator Associate Chair for Superconducting Accelerator R&D:

_____

Signature of Collider-Accelerator Department Chair:

_____

Signature of Nuclear and Particle Physics Associate Laboratory Director:

_____

Signature of Deputy Director for Operations:

_____

ASE Contents:

Section 1. Introduction 2
Section 2: BNL Safety Envelope Limits 2
Section 3: Corresponding Prototype ERL Safety Envelope Parameters 3
Prototype ERL Beam Limits in Terms of Electron Energy and Beam Power 3
Control of Beam Loss 4
Access Controls 4
Fire Protection 4

Section 4: Engineered Safety Systems Requiring Calibration, Testing, Maintenance, and Inspection 5
Section 5: Operations Envelop - Administrative Controls 5

Section 1. Introduction

The ASE Requirements herein define the conditions, safe boundaries, and the administrative controls necessary to ensure safe Prototype ERL operations and to reduce the potential risk to the public, workers and environment.

1.1 The reference to the method used by the Collider-Accelerator Department for change control of the ASE is the BNL Subject Area on Accelerator Safety.

1.2 A variation beyond the boundaries described in Sections 2, 3, and 4 of this ASE shall be treated as a violation of the ASE and shall be a reportable occurrence, as defined by the BNL SBMS Subject Area on Occurrence Reporting. A violation is defined as not satisfying a Requirement or its specific Authorized Alternative. C-A Department staff shall make notifications of occurrences according to the requirements in the C-A Operations Procedure Manual.

1.2.1 If a Requirement is not satisfied and it has a specific Authorized Alternative, implement the Authorized Alternate or stop the activity that uses the affected equipment within one hour.

1.3 Emergency actions may be taken that depart from these approved ASE Requirements when no actions consistent with the Requirements are immediately apparent and when these actions are needed to protect the public, worker and environmental safety. These actions shall be approved by the person in charge of facility safety, as defined in the operating procedures, when the emergency occurs and shall be reported to C-AD management within 2-hours.

Section 2: BNL Safety Envelope Limits

This section contains the absolute limits that BNL places on Prototype ERL operations to ensure that BNL meets regulatory limits established to protect our environment, public and staff/visitors and that those operations are conducted within the assumptions of the Prototype ERL safety analyses documented in the **Prototype ERL SAD, 6-30-08**. BNL Safety Envelope Limits for Prototype ERL operations are:

2.1. Less than 25 mrem in one year to individuals in other BNL Departments or Divisions adjacent to this Collider-Accelerator Department accelerator facility.

2.2. Less than 5 mrem in one year to a person located at the site boundary.

2.3. Offsite drinking water concentration and on-site potable well water concentration must not result in 4 mrem or greater to an individual in one year.

2.4. Less than 1250 mrem in one year to a Collider-Accelerator Department staff member.

2.5. Less than 10,000 pCi/L in the BNL sanitary sewer effluent due to liquid discharges from Prototype ERL facilities.

2.6. In order to protect groundwater, if the annual activity concentration of sodium-22 or tritium in leachate is calculated to exceed 5% of the Drinking Water Standard, then a cap shall be used unless BNL Management is convinced otherwise.[1]

2.7. All emissions from Prototype ERL facilities are managed in accordance with the Air Emissions subject area.[2] If emissions are anticipated to exceed 0.1 mrem per year to the Maximally Exposed Individual, actions will be taken to ensure operations comply with NESHAP requirements including continuous emissions monitoring and permitting.

Section 3: Corresponding Prototype ERL Safety Envelope Parameters

This section identifies the measurable limitations on critical operating parameters that, in conjunction with the specifically identified hazard control considerations established by the facility design and construction, ensure that Prototype ERL operations will not exceed the corresponding Safety Envelope Limits discussed in Section 2. These parameters are derived from the safety analyses described in the **Prototype ERL SAD, 6-30-08**. Prototype ERL safety envelope parameters are:

Prototype ERL Beam Limits in Terms of Electron Energy and Beam Power

3.1 Electron energy limit of 3.5 MeV for the super-conducting RF gun.

3.2 The power source of the superconducting gun is limited to delivering 1.2 MW of power to the gun.

3.3 Electron energy limit of 25 MeV for the Prototype ERL ring.

3.4 Electron beam power shall not exceed the equivalent of 10 MW of instantaneous power for the electron beam in the Prototype ERL ring.

3.5 The power source for the five-cell cavity will be limited to delivering a maximum of 60 kW of power to the cavity.

3.6 A beam power of 1.2 MW for a 3.5 MeV electron beam striking the beam dump.

---

[1] BNL SBMS Accelerator Safety Subject Area, Design Practice for Known Beam Loss Locations.
[2] BNL SBMS Subject Area, Radioactive Airborne Emissions.

Control of Beam Loss

3.7 Beam-loss-monitors, area-radiation monitors and area-radiation survey results shall be used in order to maintain beam loss "As Low as Reasonably Achievable" as defined in the BNL Radiological Manual.

Access Controls

3.8 The Access Controls System shall be functional during operations with beam.

3.9 During the running period, area radiation monitors that are interfaced with the Access Controls System shall be within their calibration date.

3.10 During the running period, the locations of area radiation monitors interfaced with the Access Control System are to be configuration controlled.

Fire Protection

3.11 During periods of beam operation, when access to the primary beam areas is prohibited the installed fire detection and protection systems shall be operable.

Authorized Alternative: Within 2 hours of discovery, the Department Chair or designee may allow partial or full inoperability of any fire detection or protection system for up to 80 hours with beam operations if the benefit of continuing Prototype ERL operations is judged to outweigh the potential risk of fire damage. Operating procedures shall specify the compensatory actions to be taken during inoperability.

3.12 Prototype ERL magnets and power supplies may be energized if the smoke detection system for the energized area can transmit an alarm to summon the BNL Fire/Rescue Group.

Authorized Alternative: The Operations Coordinator, ESH Coordinator or designee may allow partial or full inoperability of any fire detection system or manual alarm station in occupied areas as long as a Fire Watch is posted who can verbally communicate with the BNL Fire/Rescue Group by radio or phone.

Section 4: Engineered Safety Systems Requiring Calibration, Testing, Maintenance, and Inspection

The systems and requirements for calibration, testing, maintenance, accuracy or inspections necessary to ensure the integrity of the Prototype ERL safety envelope parameters during operations are given in this section:

4.1. The Access Control System shall be functionally tested in accordance with requirements in the BNL Radiation Control Manual.

4.2. Prototype ERL ventilation exhaust fans used to prevent an oxygen deficiency event shall undergo annual testing (not to exceed 15 months).

4.3. Prototype ERL fire protection shall undergo annual testing (not to exceed 15 months).

4.4. Area radiation monitors shall undergo annual testing (not to exceed 15 months).

4.5. Radiological barriers shall undergo annual visual inspection (not to exceed 15 months).

Section 5: Operations Envelop - Administrative Controls

Administrative controls necessary to ensure the integrity of the Prototype ERL safety envelope parameters during operations are:

5.1. Minimum Prototype ERL Control Room Staffing

5.1.1. Prototype ERL Control Room: one Trained Operator and one other person shall be on duty when Prototype ERL beam is in operation. During beam operations, one of the two must remain in the Prototype ERL Control Room at all times.

Authorized Alternative: If extra person is incapacitated, the remaining operator may continue operations as long as manning requirements are restored within two hours.

5.2. On-shift operations staff shall be trained and qualified on their safety, operational and emergency responsibilities. Records of training and qualification shall be maintained on the Brookhaven Training Management System (BTMS).

5.3. Work planning and control systems shall comply with the requirements in the C-A Operations Procedure Manual.

5.4. Environmental management shall comply with the requirements in the C-A Operations Procedure Manual.

5.5. Experiment modification and review shall comply with the requirements in the C-A Operations Procedure Manual.

5.5.1. Each upgrade in the Prototype ERL beam parameters or change of Prototype ERL configuration shall be reviewed before running with beam.

5.6. Annually, the C-AD Accelerator Systems Safety Review Committee shall review Prototype ERL's routine operations and facility for safety.

5.6.1. Prototype ERL may lie dormant for a period greater than one year between runs and does not require a review during the dormancy period.

5.7. Industrial hazards shall be controlled in accordance with the applicable portions of the BNL SBMS Subject Area.

5.8. Radiological area classifications during operations shall be in accord with requirements in the BNL Radiation Control Manual.

APPENDIX 5

Fault Study Results (Fault studies to be added following Commissioning)

Beam fault studies are conducted using the minimum beam intensity necessary to complete the study efficiently and consistent with ALARA practices. The beam is "ON" in the fault condition only as long as necessary for adequate survey measurements to be taken. Data for the fault study is kept on record and is used to verify that shielding is adequate for anticipated operations.

Fault studies will be performed after the Prototype ERL accelerator commissioners have control of the beam. Post-commissioning fault-study data will be recorded into this Appendix to the Prototype ERL SAD after the commissioning process is complete. Any changes to the shield design, as a result of a fault study finding, will be addressed in a USI to the SAD. Since fault studies are a post-SAD activity, dose rate calculations in Chapter 4 of the SAD are used to make initial estimates of radiation levels in order to implement appropriate radiological controls for commissioning. These controls, once proven effective by the fault study, verify the long-term radiological controls to be used during Prototype ERL operations.

APPENDIX 6

Qualitative Risk Assessments

Table A6-1 Vacuum
Table A6-2 External Events
Table A6-3 Electric Shock/Arc Flash
Table A6-4 Radiation External to Enclosure
Table A6-5 Radiation Inside Enclosure
Table A6-6 Activation of Components
Table A6-7 Conventional/Industrial Hazards
Table A6-8 Airborne Releases
Table A6-9 Environmental – Cooling Water Spill
Table A6-10 Loss of Electrical Power
Table A6-11 Fire
Table A6-12 Oxygen Deficiency Hazards (ODH)

Table A6-1 Qualitative Risk Assessment for Prototype ERL - Vacuum

FACILITY NAME: Prototype ERL
SYSTEM: Vacuum Beam Line
SUB-SYSTEM: Vacuum System, Beam Window
HAZARD: Vacuum

Event	Structural failure of vacuum boundary
Possible Consequences, Hazards	Implosion of any vacuum component could pose a potential health risk from flying objects or high noise.
Potential Initiators	Failure caused by worker mistake or inadvertent striking contact with vacuum boundary.

Risk Assessment Prior to Mitigation

Consequence	() High	() Medium	(X) Low	() Extremely Low
Frequency	() Anticipated High	(X) Anticipated Medium	() Unlikely	() Extremely Unlikely
Risk Category	() High Risk	() Medium	(X) Low Risk	() Extremely Low
Hazard Mitigation	1. Beam line vacuum components designed to meet consensus standards for compressive stress 2. Vacuum and pressure systems reviewed by the C-AD Chief Mechanical Engineer or his designate and BNL LESHC Pressure Safety Committee 3. Vacuum components, except for windows, are constructed of heavy-walled material, per ASME Boiler and Pressure Vessel Code, Section VIII or equivalent to minimize the threat of implosion when evacuated 4. Many windows are covered 5. Training of Users and Staff			

Risk Assessment Following Mitigation

Consequence	() High	() Medium	(X) Low	() Extremely Low
Frequency	() Anticipated High	() Anticipated Medium	(X) Unlikely	() Extremely Unlikely
Risk Category	() High Risk	() Medium	() Low Risk	(X) Extremely Low

Is the mitigated hazard adequately controlled by existing BNL policies? Y/N Yes If No, roll up into ASE.
Is the hazard mitigation system needed for hazard control? Y/N No If Yes, need ASE requirement.

Table A6-2 Qualitative Risk Assessment for Prototype ERL – External Events

FACILITY NAME: Prototype ERL
SYSTEM: Entire Facility
SUB-SYSTEM: N/A
HAZARD: External Event (Earthquake, Tornado, Hurricane, Flood, Aircraft Impact, Forest Fire, near ERL facility)

Event	External event impacts ERL
Possible Consequences, Hazards	Personnel injuries, equipment/building damage or programmatic impact
Potential Initiators	Earthquake, severe weather, flooding, fire, aircraft impact

Risk Assessment Prior to Mitigation

Consequence	(X) High	() Medium	() Low	() Extremely Low
Frequency	() Anticipated High	() Anticipated Medium	() Unlikely	(X) Extremely Unlikely
Risk Category	() High Risk	() Medium	(X) Low Risk	() Extremely Low
Hazard Mitigation	1. Building designed to Uniform Building Code and designed to meet DOE O 420.1B, Facility Safety 2. Small radioactive inventory cannot cause offsite impacts 3. BNL Fire Group can respond quickly to forest fire; BNL has firebreaks 4. BNL Fire Group can respond quickly to fire near ERL 5. No active systems needed to protect personnel from adverse health effects after ERL off 6. Severe weather and flooding potential is extremely low; warning of these impending hazards will allow for ERL shutdown and for personnel safety 7. BNL Wildfire Prevention Program			

Risk Assessment Following Mitigation

Consequence	() High	() Medium	(X) Low	() Extremely Low
Frequency	() Anticipated High	() Anticipated Medium	() Unlikely	(X) Extremely Unlikely
Risk Category	() High Risk	() Medium	() Low Risk	(X) Extremely Low

Is the mitigated hazard adequately controlled by existing BNL policies? Y/N Yes If No, roll up into ASE.
Is the hazard mitigation system needed for hazard control? Y/N No If Yes, need ASE requirement.

Table A6-3 Qualitative Risk Assessment for Prototype ERL – Electric Shock/Arc Flash

FACILITY NAME: Prototype ERL
SYSTEM: Facility
SUB-SYSTEM: Magnets, Power Supplies, Instrumentation
HAZARD: Electric Shock/Arc Flash from Exposed Conductors and Operating Breakers/Disconnects

Event	Worker contacts energized conductor and receives electrical shock or experiences arc flash while operating breakers/disconnects
Possible Consequences, Hazards	Shock, impact injury, arc flash burns
Potential Initiators	Worker falls, fails to control position of limbs or tools, equipment failure, improper work controls, improper PPE use

Risk Assessment Prior to Mitigation

Consequence	(X) High	() Medium	() Low	() Extremely Low
Frequency	(X) Anticipated High	() Anticipated Medium	() Unlikely	() Extremely Unlikely
Risk Category	(X) High Risk	() Medium	() Low Risk	() Extremely Low
Hazard Mitigation	1. Exposed conductors and terminals are covered or barriered for protection of personnel 2. Training for workers 3. Use of work planning, LOTO and Permits 4. Use of proper PPE and compliance with NFPA 70E 5. Magnets de-energized when routine work is done 6. Electrical equipment is NRTL, or review is performed for electrical safety on all non-NRTL and 'in-house' built equipment by a qualified Electrical Equipment Inspector			

Risk Assessment Following Mitigation

Consequence	() High	() Medium	() Low	(X) Extremely Low
Frequency	() Anticipated High	() Anticipated Medium	(X) Unlikely	() Extremely Unlikely
Risk Category	() High Risk	() Medium	() Low Risk	(X) Extremely Low

Is the mitigated hazard adequately controlled by existing BNL policies? Y/N Yes If No, roll up into ASE.
Is the hazard mitigation system needed for hazard control? Y/N No If Yes, need ASE requirement.

Table A6-4 Qualitative Risk Assessment for Prototype ERL – Radiation External to Enclosure

Facility Name: Prototype ERL
System: Areas External to Shielded Components
Sub-System: Prototype ERL shielding and shield penetrations
Hazard: Prompt Beam Radiation

Event	Credible beam control fault
Possible Consequences, Hazards	Unwarranted radiation exposure due to abnormal radiation levels outside beam line components, penetrations and chicanes
Potential Initiators	Failure of magnet or magnet power supply, ineffective or inefficient beam tuning

Risk Assessment Prior to Mitigation

Consequence	() High	() Medium	() Low	(X) Extremely Low
Frequency	(X) Anticipated High	() Anticipated Medium	() Unlikely	() Extremely Unlikely
Risk Category	() High Risk	() Medium	(X) Low Risk	() Extremely Low
Hazard Mitigation	1. Primary beam will not penetrate shield materials 2. Beam tuned at low intensity and beam intensity limits 3. Operator and physicist training 4. Review of design of shields and penetrations by C-AD RSC; review of fault studies 5. Radiological area postings 6. Klystron Room locked 7. Routine area radiation surveys 8. Periodic inspection of shielding to verify integrity 9. Interlocking radiation monitors			

Risk Assessment Following Mitigation

Consequence	() High	() Medium	() Low	(X) Extremely Low
Frequency	() Anticipated High	() Anticipated Medium	(X) Unlikely	() Extremely Unlikely
Risk Category	() High Risk	() Medium	() Low Risk	(X) Extremely Low

Is the mitigated hazard adequately controlled by existing BNL policies? Y/N Yes If No, roll up into ASE.
Is the hazard mitigation system needed for hazard control? Y/N No If Yes, need ASE requirement.

Table A6-5 Qualitative Risk Assessment for Prototype ERL – Radiation Inside Enclosure

FACILITY NAME: Prototype ERL
SYSTEM: Shielded Enclosures
SUB-SYSTEM: Prototype ERL Enclosure, Klystron Room
HAZARD: Prompt Beam Radiation inside Shielded Enclosures

Event	Person inside enclosure during operation
Possible Consequences, Hazards	Personal injury or death due to external prompt radiation associated with beam
Potential Initiators	Person inadvertently enters enclosure; person fails to leave before beam initiated

Risk Assessment Prior to Mitigation

Consequence	(X) High	() Medium	() Low	() Extremely Low
Frequency	() Anticipated High	(X) Anticipated Medium	() Unlikely	() Extremely Unlikely
Risk Category	() High Risk	(X) Medium	() Low Risk	() Extremely Low
Hazard Mitigation	1. Operating procedures 2. Worker / User training 3. Review of facility design by C-AD RSC 4. ERL Enclosure and Klystron Room sweep procedures 5. ACS door locks and other access controls 6. Audible/visual alarms initiated by ACS inside enclosures before beam initiation, allowing sufficient time for un-swept individuals to manually stop beam initiation or exit enclosure to stop beam initiation 7. ACS automatic interlock to stop beam if access violation 8. ACS controls critical devices to automatically confine beam to enclosure, thus keeping beam out of downstream section with personnel inside			

Risk Assessment Following Mitigation

Consequence	() High	() Medium	(X) Low	() Extremely Low
Frequency	() Anticipated High	() Anticipated Medium	() Unlikely	(X) Extremely Unlikely
Risk Category	() High Risk	() Medium	() Low Risk	(X) Extremely Low

Is the mitigated hazard adequately controlled by existing BNL policies? Y/N Yes If No, roll up into ASE.
Is the hazard mitigation system needed for hazard control? Y/N Yes If Yes, need ASE requirement.

Table A6-6 Qualitative Risk Assessment for Prototype ERL – Activation of Components

FACILITY NAME: Prototype ERL
SYSTEM: Beam Dump, Other Activated Components
SUB-SYSTEM: N/A
HAZARD: External Radiation from Activated Beam Dump, Activated Magnets and Other Components

Event	Worker / Physicist inside ERL Cave during beam off periods
Possible Consequences, Hazards	Excessive external dose
Potential Initiators	Improper work planning, procedure violation

Risk Assessment Prior to Mitigation

Consequence	() High	() Medium	() Low	(X) Extremely Low
Frequency	(X) Anticipated High	() Anticipated Medium	() Unlikely	() Extremely Unlikely
Risk Category	() High Risk	() Medium	(X) Low Risk	() Extremely Low
Hazard Mitigation	1. Beam tuning keeps activation of magnets and beam–line components to a minimum 2. Work planning prior to authorizing start of work 3. Radiological surveys of work areas 4. RWP issued prior to start of work 5. ALARA design and administrative controls 6. C-AD ALARA Committee reviews jobs and designs 7. Worker and operator training 8. Radiological postings warn personnel of high dose rates 9. Personnel entering High Radiation Areas wear alarming self-reading dosimeters			

Risk Assessment Following Mitigation

Consequence	() High	() Medium	() Low	(X) Extremely Low
Frequency	() Anticipated High	(X) Anticipated Medium	() Unlikely	() Extremely Unlikely
Risk Category	() High Risk	() Medium	() Low Risk	(X) Extremely Low

Is the mitigated hazard adequately controlled by existing BNL policies? Y/N Yes If No, roll up into ASE.
Is the hazard mitigation system needed for hazard control? Y/N No If Yes, need ASE requirement.

Table A6-7 Qualitative Risk Assessment for Prototype ERL – Conventional/Industrial Hazards

FACILITY NAME: Prototype ERL
SYSTEM: Entire Facility
SUB-SYSTEM: All Sub-systems
HAZARD: Noise, Pressure, Hazardous Atmospheres, Magnetic and RF Fields, Hoisting and Rigging Hazards, Heights, Cryogenic Fluids, Chemicals, Flammable / Explosive Gases, Falling Objects, Hot Surfaces, Trip Hazards, Welding/Cutting

Event	Injury resulting from industrial hazard
Possible Consequences, Hazards	Worker/physicist injury or death
Potential Initiators	Improper work planning, procedure violation

Risk Assessment Prior to Mitigation

Consequence	(X) High	() Medium	() Low	() Extremely Low
Frequency	(X) Anticipated High	() Anticipated Medium	() Unlikely	() Extremely Unlikely
Risk Category	(X) High Risk	() Medium	() Low Risk	() Extremely Low
Hazard Mitigation	1. Work planning prior to authorizing start of work 2. Worker operator training 3. Review and audit of conventional safety issues by C-AD staff and ESH experts during Tier 1, work planning and/or ESH appraisals 4. Design review of accelerator modifications by ASSRC and qualified engineers 5. Meeting safety requirements defined by BNL SBMS 6. Meeting requirements in 10CFR851 7. Environmental reviews 8. Manager work observations			

Risk Assessment Following Mitigation

Consequence	() High	() Medium	(X) Low	() Extremely Low
Frequency	() Anticipated High	(X) Anticipated Medium	() Unlikely	() Extremely Unlikely
Risk Category	() High Risk	() Medium	(X) Low Risk	() Extremely Low

Is the mitigated hazard adequately controlled by existing BNL policies? Y/N Yes If No, roll up into ASE.
Is the hazard mitigation system needed for hazard control? Y/N No If Yes, need ASE requirement.

Table A6-8 Qualitative Risk Assessment for Prototype ERL – Airborne Releases

FACILITY NAME: Prototype ERL
SYSTEM: Ventilation System and Vacuum Pump Emissions
SUB-SYSTEM: Exhaust Systems
HAZARD: Radioactive or Hazardous Materials

Event	Uncontrolled release of airborne radioactive or hazardous materials
Possible Consequences, Hazards	Adverse health effects to workers (public health effects not possible)
Potential Initiators	Improper work planning, violation of procedures, human error

Risk Assessment Prior to Mitigation

Consequence	() High	() Medium	() Low	(X) Extremely Low
Frequency	(X) Anticipated High	() Anticipated Medium	() Unlikely	() Extremely Unlikely
Risk Category	() High Risk	() Medium	(X) Low Risk	() Extremely Low
Hazard Mitigation	1. Radioactive airborne concentrations are insignificant 2. Work planning prior to authorizing start of work 3. Worker and operator training 4. Conduct of Operations system 5. Review of accelerator modifications by C-AD ASSRC 6. Review and monitoring of IH airborne hazards by C-AD ESSHQ Division 7. Meeting requirements defined by BNL SBMS 8. Environmental Management System 9. OSH Management System 10. Chemical Management System			

Risk Assessment Following Mitigation

Consequence	() High	() Medium	() Low	(X) Extremely Low
Frequency	() Anticipated High	(X) Anticipated Medium	() Unlikely	() Extremely Unlikely
Risk Category	() High Risk	() Medium	() Low Risk	(X) Extremely Low

Is the mitigated hazard adequately controlled by existing BNL policies? Y/N Yes If No, roll up into ASE.
Is the hazard mitigation system needed for hazard control? Y/N No If Yes, need ASE requirement.

Table A6-9 Qualitative Risk Assessment for Prototype ERL – Environmental

FACILITY NAME: Prototype ERL
SYSTEM: Cooling Water System
SUB-SYSTEM: Radioactive Water
HAZARD: Soil and Groundwater Contamination

Event	Spill of activated cooling water to soil
Possible Consequences, Hazards	Groundwater contamination, internal dose to BNL personnel or public
Potential Initiators	Water pressure boundary failure, procedure violation, improper work planning

Risk Assessment Prior to Mitigation

Consequence	() High	() Medium	() Low	(X) Extremely Low
Frequency	() Anticipated High	(X) Anticipated Medium	() Unlikely	() Extremely Unlikely
Risk Category	() High Risk	() Medium	(X) Low Risk	() Extremely Low
Hazard Mitigation	1. Radioactive liquid concentrations are insignificant 2. Work planning prior to authorizing start of work 3. Worker and operator training 4. Conduct of Operations system 5. Review of accelerator modifications by C-AD ASSRC 6. Meeting requirements defined by BNL SBMS 7. Environmental Management System 8. Chemical Management System 9. Extensive groundwater monitoring well system and groundwater-sampling program 10. Suffolk County Article 12 Code is followed in the design of cooling water systems and piping that contain significant amounts of tritium			

Risk Assessment Following Mitigation

Consequence	() High	() Medium	() Low	(X) Extremely Low
Frequency	() Anticipated High	() Anticipated Medium	(X) Unlikely	() Extremely Unlikely
Risk Category	() High Risk	() Medium	() Low Risk	(X) Extremely Low

Is the mitigated hazard adequately controlled by existing BNL policies? Y/N Yes If No, roll up into ASE.
Is the hazard mitigation system needed for hazard control? Y/N No If Yes, need ASE requirement.

Table A6-10 Qualitative Risk Assessment for Prototype ERL – Loss of Electrical Power

FACILITY NAME: Prototype ERL
SYSTEM: Entire Facility
SUB-SYSTEM: N/A
HAZARD: Hazards Produced As Power Is Lost To Equipment

Event	Loss of offsite power, local loss of power
Possible Consequences, Hazards	Personal safety hazards, programmatic loss
Potential Initiators	Equipment failure or operator error

Risk Assessment Prior to Mitigation

Consequence	() High	() Medium	() Low	(X) Extremely Low
Frequency	(X) Anticipated High	() Anticipated Medium	() Unlikely	() Extremely Unlikely
Risk Category	() High Risk	() Medium	(X) Low Risk	() Extremely Low
Hazard Mitigation	1. Integrated Safety Management program assures proper work planning prior to authorizing start of work 2. Worker and operator training 3. Review of conventional safety by C-AD ASSRC and BNL ESH Committees 4. Backup power supplied to required systems to reduce programmatic impact 5. ERL automatically shuts down upon loss of electrical power 6. Emergency lighting 7. BNL and ERL emergency procedures			

Risk Assessment Following Mitigation

Consequence	() High	() Medium	() Low	(X) Extremely Low
Frequency	() Anticipated High	(X) Anticipated Medium	() Unlikely	() Extremely Unlikely
Risk Category	() High Risk	() Medium	() Low Risk	(X) Extremely Low

Is the mitigated hazard adequately controlled by existing BNL policies? Y/N Yes If No, roll up into ASE.
Is the hazard mitigation system needed for hazard control? Y/N No If Yes, need ASE requirement.

Table A6-11 Qualitative Risk Assessment for Prototype ERL – Fire

FACILITY NAME: Prototype ERL
SYSTEM: Entire Facility
SUB-SYSTEM: N/A
HAZARD: Personal Injury or Equipment Damage

Event	Magnets, power and control cables, laboratory equipment combustion
Possible Consequences, Hazards	Injury/death, programmatic impact
Potential Initiators	Loss of cooling to magnets or power supplies, transient combustibles start fire which spreads, electrical component overheating, flammable/combustible gas ignition, human error

Risk Assessment Prior to Mitigation

Consequence	(X) High	() Medium	() Low	() Extremely Low
Frequency	() Anticipated High	(X) Anticipated Medium	() Unlikely	() Extremely Unlikely
Risk Category	() High Risk	(X) Medium	() Low Risk	() Extremely Low
Hazard Mitigation	1. Combustible loading is minimized 2. Periodic safety inspections 3. Safety training 4. Fire detection and suppression system 5. Design reviewed by BNL Fire Protection Engineer 6. Design meets NFPA requirements 7. Ventilation system 8. Conventional safety reviewed by C-AD ESRC 9. B912 FHA and implementation of protections			

Risk Assessment Following Mitigation

Consequence	() High	() Medium	(X) Low	() Extremely Low
Frequency	() Anticipated High	(X) Anticipated Medium	() Unlikely	() Extremely Unlikely
Risk Category	() High Risk	() Medium	(X) Low Risk	() Extremely Low

Is the mitigated hazard adequately controlled by existing BNL policies? Y/N Yes If No, roll up into ASE.
Is the hazard mitigation system needed for hazard control? Y/N Yes If Yes, need ASE requirement.

Table A6-12 Qualitative Risk Assessment for Prototype ERL – Oxygen Deficiency Hazards

FACILITY NAME: Prototype ERL
SYSTEM: ERL Facilities
SUB-SYSTEM: Cryogenic liquids, inert gas use/storage
HAZARD: Oxygen Deficiency

Event	Breathing air displaced causing reduced oxygen concentration
Possible Consequences, Hazards	Illness, asphyxiation
Potential Initiators	Significant release of gases to area or room

Risk Assessment Prior to Mitigation

Consequence	(X) High	() Medium	() Low	() Extremely Low
Frequency	() Anticipated High	(X) Anticipated Medium	() Unlikely	() Extremely Unlikely
Risk Category	() High Risk	(X) Medium	() Low Risk	() Extremely Low
Hazard Mitigation	1. ODH hazards analyzed and controls in place as per BNL SBMS requirements 2. Work planning and LOTO 3. Review of ODH hazards and controls by C-AD ASSRC 4. Review of ODH hazards and controls by BNL PCSS 5. Cryogenic pressure boundary designs meet ASME Code and appropriate consensus stands designs and testing requirements			

Risk Assessment Following Mitigation

Consequence	() High	(X) Medium	() Low	(X) Extremely Low
Frequency	() Anticipated High	() Anticipated Medium	(X) Unlikely	() Extremely Unlikely
Risk Category	() High Risk	() Medium	(X) Low Risk	() Extremely Low

Is the mitigated hazard adequately controlled by existing BNL policies? Y/N Yes If No, roll up into ASE.
Is the hazard mitigation system needed for hazard control? Y/N Yes If Yes, need ASE requirement.

APPENDIX 7

Cooling Water Activation

Water Activation in ERL Test Area

D. Beavis
May 5, 2006
Amended May 8, 2006

A simple estimate is made below for the expected radioactive concentrations in water at the ERL test area for the dipole magnets.

W.P. Swanson (Ref. 1) provides a simple method to estimate the radioactive saturation concentrations in water for electron beams stopped in water. Table XXXIIa lists the activation products per kW of stopped electrons in water (numbers provided below). It is suggested that for electron energies at or below 50 MeV that the numbers for O-15 be reduced by a factor of two and the other isotopes can have a larger reduction factor. A reduction of a factor of two will be used.

The Bremsstrahlung photons only have a small fraction of their path length in the cooling water of the dipole magnets. It the water is approximated as a sheet of water from the magnet mid-plane to the top of the coil, it has dimensions 6.85cm by 0.23 cm thick. To account for the small photon path length in water the activation will be reduced by the thickness divided by 2 radiation lengths (0.23cm/72cm). Coupled with the factor of two discussed above the total reduction in activity will be 0.0016. The routine loss of 50 MeV electron beam is expected to be 0.1 kW. It will be assumed that the beam loss occurs near a dipole. The activities with the expected beam loss and the total reduction factor are shown in the third column of the table below.

The expected saturation activities are:

Nuclide	Sat. Activity (GBq/(kW))	Reduced GBq
O-15	330	0.053
O-14	3.7	0.0006
N-13	3.7	0.0006
C-11	15.	0.0024
C-10	3.7	0.0006
Be-7	1.5	0.00024
H-3	7.4	0.0012

Several factors are needed to get the concentration and expected dose rates. From the numbers above the activity and dose will be dominated by the O-15 so we will ignore the other concentrations. The water system has a volume of approximately 2300 liters (600 gallons). The saturation concentration of O-15 is 23 Bq/cc. Estimates of the potential dose rate will require information on the water geometry and the conversion factor for gamma rate to dose. Following the discussion of Sullivan (Ref 2.) we will assume that the decays of O-15 will produce two 0.51 MeV gammas. We have a conversion factor (see Ref. 2) of 2.31*10**-10 rads/(gamma-cm**2).

The dose rate will be estimated at the surface for a 30cm diameter sphere of water and a 164 cm diameter sphere (entire water volume). The surface dose rates are (ignoring any self shielding):

164 cm diameter sphere 0.5 mrad/hr
30 cm diameter sphere 0.1 mrad/hr

Based on the approximations discussed above it is expected that the actual concentrations and dose rates will be smaller.

The tritium concentration can be obtained from the numbers above. The saturation activity is equal to the production rate. The production rate is therefore 1.2*10**6 H-3 atoms/s. The beam is expected to be operated for 40 hours per month and nine months per year for a total of 1.3*10**6 seconds per years. The water system has a volume of 2300 liters. The expected concentration of tritium in the cooling water after one year of operation is 6.8*10**8 H-3 atoms/liter. The activity is the decay constant times the number of atoms. The decay constant for tritium is 1.8*10**-9/sec and 1 Ci = 3.7*10**10 decays per second. The activity concentration for tritium is 33 pCi/liter after one year of operation.

References

1. W.P. Swanson, Radiological Safety Aspects of the Operation of Electron Linear Accelerators, Tech. Rep. Series No. 188, Int. At. Energy Agency, Vienna, 1979.
2. A.H. Sullivan, A guide to Radiation and Radioactivity Levels Near High Energy Particle Accelerators, 1992

APPENDIX 8

Air Activation

Air Activation in ERL Test Area

D. Beavis
May 3, 2006

A simple estimate is made below for the upper limit on the expected radioactive air concentrations in the ERL test area.

W.P. Swanson (Ref. 1) provides for a simple method to estimate the radioactive saturation concentrations in air that are produced by electron beams. It is assumed that the electron beam is incident on a high-Z thick target. Numbers for the saturation activity are given in Table XXXa of Reference 1. It is expected that the actually targeting conditions will create less activity. In addition, the close in shielding which is expected to attenuate the forward Bremsstrahlung for ERL will further reduce the air radioactive concentrations. To utilize Table XXXa of Reference 1 a few numbers are needed for the ERL test area.

I have approximated the room dimensions as 8.5m by 20.7m by 2.74 m. I will further assume that the average distance in air from a loss point to a wall is on the average 4 meters. Finally I will assume that the routine 50MeV loss is 100 Watts.

The expected saturation concentrations are:

Nuclide	Average room saturation activity Concentration (Bq/cc)
H-3	$4.2*10^{-3}$
Be-7	$8.3*10^{-4}$
C-11	$2. *10^{-5}$
N-13	$4. *10^{-1}$
O-15	$4.6*10^{-2}$
N-16	$1.7*10^{-5}$
Cl-38	$1.8*10^{-4}$
Cl-39	$1.3*10^{-3}$

References

1. W.P. Swanson, Radiological Safety Aspects of the Operation of Electron Linear Accelerators, Tech. Rep. Series No. 188, Int. At. Energy Agency, Vienna, 1979.

Approval Signatures

E. Lessard, Collider-Accelerator Department Associate Chair for ESSHQ

I. Ben-Zvi, Collider-Accelerator Department Associate Chair for Superconducting Accelerator R&D

D. Lowenstein, Collider-Accelerator Department Chair

S. Vigdor, BNL Associate Laboratory Director, Nuclear and Particle Physics

M. Bebon, Deputy Laboratory Director for Operations

C-A Unreviewed Safety Issue (USI) Form

Title of USI: ERL SAD Chapter 4, Safety Analysis - ERL Gun Power Increase from 1.2 to 1.5 MW for Dose and Dose Rate Calculations

Description of USI (use attachments if necessary):
In order to conservatively estimate dose and dose rates from 3.5 MeV electrons the ERL gun power has been increased from 1.2 MW to 1.5 MW so that dose and dose rate estimates are based on a power level that exceeds the gun capabilities.
Chapter 4 of the ERL SAD is attached which includes this power change.

Title and Date of Relevant SAD: ERL SAD, June 30, 2008

Committee Chair or ESSHQ Division Head must initial all items. Leave no blanks:

ITEM	APPLIES	DOES NOT APPLY
Decision to not revise the current SAD and/or ASE at this time:	RCK	
The hazard associated with the proposed work or event is covered within an existing SAD and/or ASE.	RCK	
SAD Title and Date: Prototype ERL SAD, June 30, 2008		
This Form and attachments, if necessary, shall be used to document the USI until the next revision of the appropriate SAD.	RCK	
Decision to submit a revised SAD and/or ASE to the BNL ESH Committee:		RCK
The hazard associated with the proposed work is not appropriately included in an SAD.		RCK

Signature on File 12-26-2008
Signature of C-A Committee Chair or C-A ESSHQ Division Head Date

Signature on File 12-26-2008
Signature of C-A Associate Chair for ESSHQ Date

4.Safety Analysis

The level of detail included was correlated with the size, complexity, hazards, potential impacts and risks associated with Prototype ERL facility operation. The hazards analysis is comprehensive, and explored the full range of consequences each hazard could have on workers, the public, and the environment. It was based on sound assumptions so that effort would be focused on analysis of credible and realistic consequences. As allowed by DOE G 420.2-1[17], this SAD references a survey of the hazards present at the accelerator facility, including prompt radiation, radioactive materials, non-ionizing radiation, hazardous materials, and sources of energy. The hazard evaluation information in the SAD includes credible initiating events, the assumptions used in estimating the consequences, and controls required to reduce hazards and associated risk to acceptable levels. Identified controls were evaluated to determine if any were credited controls.

A credited control is one determined through hazard evaluation to be essential for safe operation directly related to the protection of personnel or the environment. The credited controls are a limited subset of the total controls employed for overall facility operation. Credited controls were assigned a higher degree of operational assurance than other controls. For example if a system, equipment or practice actively or passively protects workers and/or staff from a significant hazard, then it has formal administrative controls or limits for operation. These credited controls are treated specially and considered for incorporation in the ASE, appropriate procedures and/or quality assurance.

[17] Accelerator Facility Safety Implementation Guide for DOE O 420.2B, Safety Of Accelerator Facilities

Implicit in the above discussion is that analysis of hazards, consequences, and the types and reliability of controls, involved professional judgment. This judgment was based on sound technical and/or scientific principles using accepted methods for hazard analysis suitable for the types and magnitudes of hazards present.

4.1. Identification of Potentially Hazardous Conditions from Radiation Associated With Operation

At ERL, the primary electron beam is only present when the machine is operating. Before interacting at a particular location, the accelerated beam is essentially mono-energetic, consisting of only electrons. If the electrons stop in the accelerator equipment, beam stop or shielding, then electromagnetic cascades and Bremsstrahlung radiation can occur. For lower energy electrons, 25 MeV or less, Bremsstrahlung radiation contributes substantially to the energy loss by electrons in matter. Bremsstrahlung radiation is emitted by a decelerating charged particle or by a charged particle changing direction. Bremsstrahlung is German for braking radiation, and in particular, the term is used for photon radiation emitted by electron decelerations when electrons pass through the electric field of atomic nuclei. This produces photon radiation distributed over a wide range of energies.

If electrons are accelerated in a magnetic field, they can also produce photons and this is termed synchrotron radiation. Synchrotron radiation from this accelerator is produced when the electron beam circulates in the magnetic field of the ring. This synchrotron radiation is low energy and is attenuated by the shielding used for Bremsstrahlung.

When the machine is operating, the radiation outside the shielding is dominated by indirectly ionizing radiation such as photons and neutrons that penetrate the shielding. Neutrons are produced from the higher-energy Bremsstrahlung photons that interact with nuclei that make up the concrete shield. Because these are lower-energy Bremsstrahlung photons, at least in terms of causing nuclear reactions, the dominant neutron-producing mechanism is the giant nuclear resonance. Among the best-known example is the giant electric dipole (E1) resonance, which is concentrated in the energy region of 10 to 30 MeV for most, if not all, nuclei. In the E1 resonance, all protons and all neutrons in the nucleus oscillate with opposite phase, which produces a time-varying electric dipole moment, which acts as an effective antenna for absorbing or radiating gamma rays. The E1 resonance is the best known of the nuclear giant resonances. It is the dominant feature in reactions initiated by gamma rays. The absorption of a gamma ray induces the giant E1 oscillation, which breaks up, in this case, by emitting neutrons. This resonance is also the dominant feature in the reverse process, in which gamma rays are produced by proton and neutron bombardments of nuclei.[18]

The neutron spectrum from the E1 resonance process is often compared to a fission spectrum and is well described by a Maxwellian distribution. Shielding is relatively straightforward. The neutron-dose-equivalent tenth-value-layer for ordinary and heavy concrete is about 100 g cm^{-2} for this neutron spectrum.[19]

[18] http://www.answers.com/topic/giant-nuclear-resonance?cat=technology, January 2008.
[19] NCRP 144, Radiation Protection for Particle Accelerator Facilities, December 2003.

Neutrons can induce radioactivity in the Prototype ERL machine components, cooling water and nearby equipment. This neutron activation is expected to be insignificant at ERL because the electron energies into the beam dump are well below most activation thresholds. Residual radiation from the dump will be verified by radiation surveys near the beam dump after the machine is turned off, and by cooling water sampling and analysis. Radiation controls are in place as required during entry into the Prototype ERL following machine shutdown for inspection, maintenance, modification or repair activities. Because of the insignificant activation at ERL no contamination issues are expected.

The principal radiation hazards at Prototype ERL derive from the primary electron beam flux and duty-cycle of the machine. Listed in order of relative importance to health, these hazards include:

- Potential inadvertent exposure of workers to primary electron beam or RF induced x-rays from the electron gun or 5-cell accelerating cavities

  NOTE: The access controls system and the enclosed beam pipe prevent exposure of personnel to this beam. The probability of unsafe failure of the access controls system that would allow an overexposure from primary beam or Bremsstrahlung is so low[20] that this hazard is not credible and further analysis is not performed.

- Exposure to photon and neutron radiation near labyrinths and penetrations
- Exposure to photon and neutron radiation that penetrates through the shielding
- Exposure to skyshine radiation

[20] D. Beavis, Failures in the PLC Based Radiation Safety Systems, October 31, 2000; D. Beavis, Frequency of Interlock Testing, November 6, 2000; D. Beavis, Estimation of Time to Loss of Protection-The D-Downstream Gate, November 13, 2000.

NOTE: Escaping neutrons and gammas through thin parts of the shield or roof causes skyshine radiation; that is, the escaping radiation interacts with atoms in the air column above the accelerator and some of the resulting lower-energy radiation is scattered downward from these interactions. Skyshine radiation may extend many tens of meters from this accelerator. The Prototype ERL roof shields are inaccessible, via administrative access controls, during operations. The concern here are the dose rates from skyshine in the Prototype ERL Control Room, B966 and B940 due to the expected occupancy of these areas relative to other areas surrounding ERL. However, this source is expected to be insignificant during routine beam operations. This will be confirmed during routine radiation surveys and by environmental thermo-luminescent dosimeters (TLDs) placed around the facility.

- Exposure to activated air
- Exposure to potential residual radiation induced in machine components
- Exposure to or inadvertent release of activated cooling water to the environment

The ERL is an experimental machine that may undergo changes in operations as more is learned about its operating characteristics. If any of these changes involve a potential change in the radiation hazards, appropriate work planning and safety-committee reviews will take place to ensure that the BNL Radiological Control Manual requirements are met and ASE limits continue to be satisfied. If the ASE limits need to be revised to allow more flexibility in research/operations, the proposed ASE changes will be submitted to DOE for approval before the changes occur.

Estimates of the expected dose rates from Prototype ERL operations are described below. During commissioning, radiation surveys will be conducted to validate these estimates. The expectation is that actual dose rates will be below these computed does rates. If necessary, the shielding will be appropriately modified to ensure that routine and faulted doses and dose rates will be acceptable for full power operation of Prototype ERL.

Table 4.1 Parameters of the Prototype ERL in Building 912

	High charge mode	Low charge mode
Injection energy, MeV	3.5	3.5
Maximum beam energy, MeV	25	25
Average beam current, mA	100-200	10-200
Bunch rep-rate, MHz	9.4	9.4-700
Charge per bunch, nC	10 or more	~0.3 -1
Efficiency of current recovery	>99.95%	>99.95%

The proposed ASE limitations for the Prototype ERL are summarized below. It is noted that rated power sources for Prototype ERL, 1 MW for the gun and 50 kW for the 5-cell cavity, were conservatively increased to levels beyond their capacity to estimate dose and dose rates. The gun power was assumed to be 1.5 MW and the 5-cell cavity 60 kW. Prototype ERL power sources are not designed to produce this increased power; rather, the shielding was analyzed at this increased power level. Thus, a safety margin of 1.2 to 1.5 has been included in the dose and dose rate calculations in this SAD:

Deleted: 20%

- Electron energy limit of 3.5 MeV for the superconducting RF gun
- The power source of the superconducting gun is limited to delivering 1.5 MW of power to the gun
- Electron energy limit of 25 MeV for the ERL ring

Deleted: 2

- Electron beam power shall not exceed the equivalent of 10 MW of instantaneous power for the electron beam in the Prototype ERL ring
- The power source for the five-cell cavity will be limited to delivering a maximum of 60 kW of power to the cavity
- A beam power of 1.5 MW for electron beam striking the beam dump

Deleted: 2

4.1.1. Unshielded Source Radiation Levels

Based on average continuous beam current of 200 mA, the average beam power is 0.7 MW at 3.5 MeV and 5 MW at 25 MeV. For the purpose of setting limits in the ASE, 1.5 MW at 3.5 MeV and 10 MW at 25 MeV were chosen as the maximum beam powers.

Deleted: 2

Continuous beam loss in the electron ring is limited via the physics of the Prototype ERL. If beam in the ring is totally intercepted, continuous beam loss in the ring vanishes since no energy is recovered to accelerate the next pulse in the CW train of pulses coming from the electron gun. This self-limiting effect is one of the peculiarities of an Prototype ERL ring. The maximum continuous beam loss is limited by the power that can be restored by the 5-cell cavity power supply, which is 50 kW. As noted previously, for dose and dose rates calculations, a factor of 1.2 or 60 kW is assumed to be the restoring power.

On the way to the dump, it is not expected that the entire 3.5 MeV beam at average current can be lost at any single point for an extended period of time. In radiation protection it is a conservative practice to assume that all electron beams produce thick-target Bremsstrahlung in

high-Z material, regardless of the actual thickness or type of target. Thick target curves (see figure that follows)[21] for Bremsstrahlung radiation from NCRP 144 Figure 3.5 show that a 3.5 MeV beam at 1.5 MW can produce instantaneous absorbed dose rates of 6.25x10^7 rad/h at 1 meter in the forward direction and 10^7 rad/h at 1 meter in the transverse direction. The 3.5 MeV beam has insufficient energy to cause a neutron dose contribution via the photon-giant-nuclear-resonance process. [22]

Deleted: 2
Deleted: 5
Deleted: 8x
Deleted: 6

Routine loss of a small fraction of the 3.5 MeV beam is expected. In normal operations the losses of the 3.5 MeV beam will be dominated by loss at the collimator. One micro-amp of beam is anticipated to be routinely lost on the collimator. One micro-amp continuous 3.5 MeV beam loss, which is a beam power of 0.0035 kW, equates to a forward absorbed dose rate of 140 rad/h and a transverse absorbed dose rate of 28 rad/h at 1 meter with no shielding. The collimator is located in the transport between the gun and the first chicane.

The 3.5 MeV beam is not intended to be transported into the 25 MeV transport ring after the first bend after the superconducting RF cavity. For radiation safety purposes, interlocks prevent the transport of the 3.5 MeV beam past this magnet.

The electron gun beam power will eventually be transported to the beam dump. From Table 4.1, the average beam current is 200 milliamps. Two-hundred milliamps of continuous 3.5 MeV beam loss on the dump, which is a beam power of 700 kW, equates to a forward absorbed

[21] NCRP Report No. 144, Radiation Protection for Particle Accelerator Facilities, Figure 3.5
[22] Ibid, Figure 3.12

dose rate of 2.8×10^7 rad/h and a transverse absorbed dose rate of 5.6×10^6 rad/h at 1 meter with no shielding.

The high energy electron beam, 25 MeV, is separated from the low energy 3.5 MeV beam in the chicanes before and after the SRF cavity. Conservatively assuming a 60 kW maximum sustainable loss, which is the limit of the SRF power supply, NCRP 144 Figure 3.5 shows Bremsstrahlung dose rates of 4×10^7 rad/h in the forward direction at 1 meter with no shielding, and 5×10^5 rad/h in the transverse direction. Since this energy Bremsstrahlung also produces giant resonance neutrons, the 25 MeV beam generates the highest neutron yield.

Swanson[23] (see figure that follows) has illustrated the broad features of the radiation field due to the unshielded initial interactions of electrons. The figure shows the radiation dose is heavily dominated by the Bremsstrahlung contribution. However, this figure is useful for making crude estimates of the resultant neutron radiation field. For a 60 kW continuous loss of 25 MeV electron beam, neutron dose equivalents range between 6×10^3 and 1×10^5 rem/h at 1 meter, which are several orders of magnitude less than the dose equivalent from Bremsstrahlung. At C-AD, a value of 430 rem/kW-h at 1 meter was used in the RSC Chair's analysis for electron energy of 25 MeV (i.e., 3×10^4 rem/h at 60 kW).[24]

---

[23] W. P. Swanson, Radiological Safety Aspects Of The Operation Of Electron Linear Accelerators, Technical Report No. 188, International Atomic Energy Agency (IAEA), Vienna, 1979. Adapted in Radiation Physics For Personnel And Environmental Protection, Fermilab Report Tm-1834, Revision 7, April 2004, J. Donald Cossairt, Fermi National Accelerator Laboratory.
[24] D. Beavis, Simple Estimate of ERL Radiation, August 1, 2006.

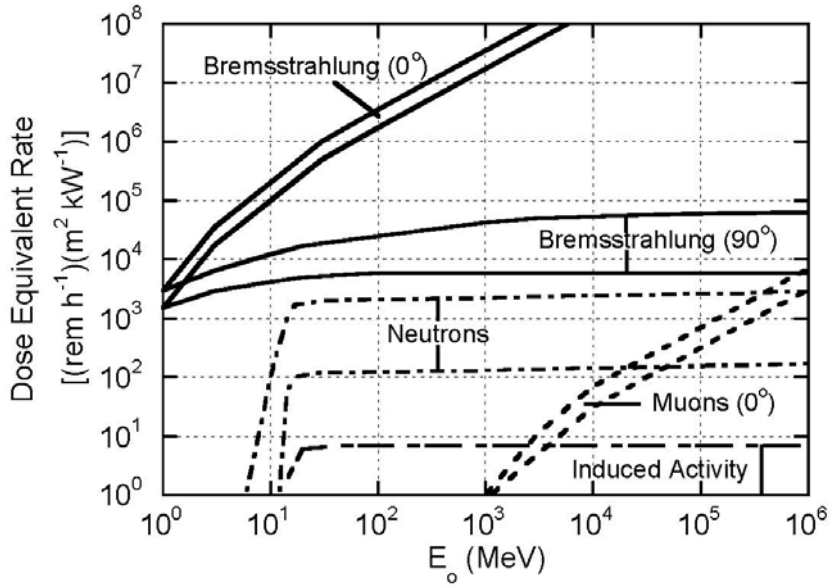

Fig. 3.10 Dose-equivalent rates per unit primary beam power at one meter produced by various types of "secondary" radiations from a high-Z target as a function of primary beam energy, if no shielding were present (qualitative). The width of the bands suggests the degree of variation found, depending on such factors as target material and thickness. The angles at which the various processes are most important are indicated. [Adapted from (Sw79a).]

The unshielded dose rate values represent a starting point for appropriately shielding the facility in order to adhere to the C-AD Shielding Policy. Section 4.1.2, which is the next section, contains detailed results of calculations that were performed for the shielded facility.

4.1.2. Maximum Credible Dose Rates on Outside Surface of 48-Inch Concrete Shield

Beam loss in the ring is limited for machine protection by beam current transformers used in a differential mode, and is anticipated being low because high loss would cause major equipment damage, quickly terminating operation of the accelerator. On the other hand, for this analysis the machine protection system is not credited in reducing dose from a beam loss event.

Deleted: 2

The maximum sustained beam loss is 1.5 MW for 3.5 MeV injection electrons and 60 kW in the 25 MeV ring. Credible routine losses are expected to be 1 W at beam injection and 50 W for the 25 MeV beam. Additional heavy concrete or iron shielding for the electron ring in the cave is present to reduce the Bremsstrahlung dose rate in the forward direction. This added shielding reduces the 0-degree Bremsstrahlung dose rates by a factor of at least 0.005. Including this added shielding, the following estimates for gamma and neutron dose rates at the outside surface of the Prototype ERL cave shielding are shown in Table 4.1.2.a.[25,26] Details of the calculations are given in Appendix 1.

[25] D. Beavis, Simple Estimate of ERL Radiation, August 1, 2006
[26] D. Beavis, The Effectiveness of a Two-Foot Thick Inner Heavy Concrete Wall, December 11, 2006

Table 4.1.2.a Dose Outside of Prototype ERL Cave for 3.5 and 25 MeV Electrons

Condition	Instantaneous dose rate from maximum beam loss[a]	Dose rate from sustainable loss[b]	Dose from sustainable loss assuming interlock occurs[d]
3.5MeV@ 0 degrees, γ	110,000 mrad/h	0.073 mrad/h	0.0002 mrad
3.5MeV@ 90 degrees, γ	22,400 mrad/h	0.015 mrad/h	0.00004 mrad
25 MeV@ 0 degrees, γ	65,000 mrad/h[c]	4000 mrad/h[c]	10 mrad[c]
25 MeV @ 90 degrees, γ	13,000 mrad/h	800 mrad/h	2.0 mrad
25 MeV neutrons	120 mrem/h	6.0 mrem/h	0.015 mrem

Deleted: 88

Deleted: 18

Deleted: 0

[a] The maximum instantaneous beam loss is 1.5 MW at 3.5 MeV and 10 MW at 25 MeV, a loss which would terminate after a small fraction of a second.

Deleted: 2

[b] The sustainable loss is 1 W for 3.5 MeV and 60 kW for 25 MeV electrons is assumed.

[c] The forward direction gamma dose rates have been reduced by a factor of 0.005 by the addition of 2-feet of heavy concrete in the electron ring.

[d] As with all C-AD interlocking area-dose-rate monitors (named 'Chipmunks'), a 9-second delay from sensing the trip point dose rate to stopping of beam is conservatively assumed in SAD analyses.

Routine surveys during commissioning will ensure that radiation area postings reflect the actual dose rates during operations.

The electron gun and the 5-cell accelerating cavity will generate x-rays from field emission of wall-surface electrons. They are assumed to generate x-ray dose rates similar to the RHIC RF cavities. A conservative dose rate of 2000 rad/h at 1 meter is assumed for the maximum sustainable loss during conditioning of the cavity and 80 rad/h at 1 meter is assumed for routine losses. Comparison of this source with the dose rates from the routine electron beam loss shows that the x-ray dose rates at the outside surface of the Prototype ERL cave shielding are insignificant.

The Monte Carlo Neutron Photon Transport Computer Code (MCNPX) was run to estimate the dose rates from skyshine in normally occupied areas during ERL operations. The results are summarized below for the assumed maximum sustainable loss of 60 kW, and for a more realistic but conservative loss of 50 W assuming that Chipmunks interlock the beam at a set point determined by the RSC. It is noted that Prototype ERL will be run only about 25% of a year. Using this occupancy with the expected sustainable loss of 50 W, the annual dose to an individual in the Prototype ERL control room will be 41 mrem.

Table 4.1.2.b Skyshine Dose Rate Estimates From 25 MeV Beam Loss[27]

Occupied Location	Maximum sustainable loss (60 kW of 25 MeV electron beam)	Conservative sustainable loss (50 W of 25 MeV electron beam)	Maximum dose with 60 kW loss assuming Chipmunk Trips Beam
ERL Control Room	98 mrem/h	0.082 mrem/h	0.25 mrem
Building 966	26 mrem/h	0.022 mrem/h	0.07 mrem
Building 940	4.0 mrem/h	0.0033 mrem/h	0.01 mrem

The Klystron room shielding was based on the operation of a similar Klystron at Los Alamos, which had a 1/8 inch lead "garage" over it. The Prototype ERL Klystron operates at an upper voltage of ~92 kV. For the ~200 kV upper energy limit of the x-rays, the 1/8 inch of lead was computed[28] to be equivalent to 1-inch of steel at operating voltage and ~2.1 inches of steel at 150 kV. Based on this calculation and radiation measurements made at the manufacturer's facility, the Klystron room is a steel box with a wall thickness of 2 inches of steel. There are penetrations in the back wall for utilities and the wave guide. These penetrations are shadowed by steel and lead to prevent x-rays from directly shining out.

Dose estimates for the penetrations use a combination of simple source terms and estimates of the attenuation of the radiation as it propagates through the opening.[29] The estimates are intended to be order of magnitude estimates. Conservative assumptions are usually used so that the estimates represent upper limits for the potential dose rates. The low-intensity fault studies for the RF-gun, five-cell cavity, and transport of the low energy and high energy

[27] Email from K. Yip to R. Karol dated January 29, 2008, Skyshine
[28] MicroShield Version 7.02, Grove Software Incorporated
[29] D. Beavis, Dose Rate Estimates for ERL Penetrations, March 26, 2008.

electron beams will be used to verify the source terms and radiation transport through the shielding and penetrations.

There are approximately 20 penetrations through the Prototype ERL external shielding. Two of the major penetrations are used for personnel and equipment access. Several of the penetrations are buss blocks containing several dozen small penetrations for access of utilities. Other penetrations are intended for electrical cables, cryogens, gas exhaust, laser beam, etc.

The ERL enclosure has side walls composed of between four and eight feet of light concrete. The thin sections of wall are shadowed from the potential sources with inner shield walls located appropriately. The entire facility has a single layer of light concrete roof beams four feet thick, except for a transition region where the roof is two layers of roof beams. This transition region is where the 13 foot ceiling height in the center is reduced to 9 feet at both ends.

The radiation sources are predominately x-rays and gamma rays. The 25 MeV electron beam is capable of generating neutrons. Only in conditions where substantial high-Z shielding materials have been used or where it takes many bounces for radiation to get through a penetration is it possible for the neutron dose rates to dominate the x-ray dose rates.

The shielding was evaluated for two types of exposures, normal and fault conditions. Dose rates during fault conditions are typically many orders of magnitude larger than that of normal operating conditions. The areas around the penetrations are typically not occupied and they are posted for localized elevated dose rates. The main focus of the penetration analysis is

the issue of dose to personnel during a faulted beam condition, as opposed to dose from normal operations.

During operations, all areas near the Prototype ERL shielding are posted at least as a Radiation Area. Large dose rates caused by fault conditions are detected and controlled by area radiation monitors (Chipmunks) distributed around the area as defined by the RSC. These devices are coupled with the interlock system and terminate the radiation in 1 to 9 seconds depending on the level of radiation at the detector. A delay of 9 seconds was assumed for the estimate of dose from fault conditions.

The four sources of radiation in the area are the injector, beam losses of the 3.5 MeV electron beam, the five-cell cavity, and beam losses of the 25 MeV electron beam. The source terms used are conservative. As already noted, the fault studies at low intensity will provide a check on the source terms and the effectiveness of the installed shielding.

The injector and the five-cell cavity can generate copious x-rays. No modeling has been conducted for the injector and the five-cell cavity in terms of the x-ray generation, but experience from other similar systems at C-AD can be used for guidance. The conditioning of these RF cavities will cause the largest x-ray generation. The superconducting five-cell cavity is expected to be able to absorb 100 to 1000 watts from field emission electrons crashing into the walls of the cavity before boiling too much helium and becoming normal. The voltage difference that field emission electrons cross is typically less than the gradient of a single cavity, 5 MV. Only a few electrons accelerate across several cavities. It is assumed that all the electrons are at 3.5 MeV with a maximum conditioning loss of 250 W. It is expected that the routine loss is less than 10

W for the five cell cavities. It was assumed that the injector has this same characteristic. Previous methods[30] are used to estimate the 90-degree radiation, using thick target formulas. The calculated unshielded dose rates for conditioning are 2000 rem/h at 1 meter, and for normal operations, 80 rem/h at 1 meter. Thus, the shielding used to protect against normal electron beam losses is adequate to protect against this source too.

The dose from a 25 MeV electron beam loss in the near zero degree direction has been estimated to be 10,800 rad/hr at 3 meters with 2 feet of heavy concrete between the source and the point of interest with a 60 kW loss[31]. This value was used in the calculations for locations where an inner shield wall acts as a shadow for the 25 MeV beam losses in the ring.

The maximum sustainable beam loss that the 5 cell cavity can support is 60 kW, which is limited by the RF power supply. According to the machine designers, the realistic maximum local loss that can occur is between 10 and 100 W before the machine is damaged and shuts down. The ERL has machine protection devices to limit losses in order to avoid equipment damage. Thus, the 60 kW loss assumed for shielding calculations (Appendix 1) is considered conservative. Routine losses are expected to be less than 10 W.

The 3.5 MeV beam has a power limit of 1.5 MW. This power can be deposited in the water cooled beam dump, which has local shielding. Again it is not expected that the machine can survive a large beam loss at any location, except at the beam dump. The beam dump is shielded sufficiently and was not considered for the penetration evaluations.

Deleted: 2

[30] D. Beavis, "Simple Estimates of ERL Radiation", August 9, 2008.
[31] D. Beavis, "The Effectiveness of a Two-Foot Thick Inner Concrete Wall", December 11, 2006, Figure 1.

An arbitrary 1 kW of a 3.5 MeV electron beam was assumed for the penetration analysis. A routine loss of 10 W or less is expected. Any routine loss higher than this, as observed during daily radiation surveys, will be reviewed by the RSC for the possible addition of local shielding.

The following table (Table 4.1.2.c) summarizes the calculations in Appendix 1 for each penetration for gamma rays and neutrons. The maximum neutrons can come from a different source location than the gamma rays. In all cases the maximum gamma dose rates are from the 25 MeV electron beam losses.

Table 4.1.2.c Estimated Maximum Dose Rates and Fault Dose to Worker Near Penetrations

Penetration	Maximum Gamma Dose Rate (rem/h)	Maximum Neutron Dose Rate (rem/h)	Maximum Dose with Interlock (mrem)[8]
Laser port	3.1	0.025	7.8
1 MW Waveguide	63	0.6	158
Cryo Ports (5)	12.6 [1]	3 [1]	39
North Gate	0.39	2.7	7.7
North Labyrinth Buss Block	6 [2]	0.15	15.4
South Gate	73.5[3]	0.24	184
Port in South Labyrinth (2)	90 [4]	0.9	227
West Trench	9	0.15	22.9
East Trench	3	2.4	13.5
South labyrinth buss block	0.15	0.45	1.5
ODH Vent	15 [5]	6 [5]	52.5
Lifting Fixture holes (4)	2.1 [6]	0.012 [6]	5.3
50 kW waveguide	42 [7]	1.5 [7]	109

[1] Assumes that steel has been used to reduce the gamma rays by a factor of 10.
[2] This is directly outside the buss block. This may be in a fenced area.
[3] A shield block in the ring center would substantially reduce this dose rate, if desired.
[4] At port exit which may be in a fenced area. Port may be packed in the future. This value is for the port with the highest dose rate of the two ports.
[5] This is on the roof and is not allowed to have personnel access during operations.
[6] Evaluated at the edge of the shielding and not on the roof.
[7] The penetrations for the cables ports, water pipes and the 50 kW waveguide are computed in a separate note[32]. The dose rates presented here are at a height of 12 feet above the floor.
[8] Barriers are used to prevent access to penetrations greater than 20 mrem fault dose. Shielding will be added and barriers removed based on fault studies in order to reduce the fault dose below 20 mrem.

All the dose rates in the Table 4.1.2.c are sufficiently low such that with appropriately placed Chipmunk monitors to terminate the beam on large beam losses, the exposure to personnel is less than 10 mrem from a fault. Where fault dose rate exceeds 50 rem/h at a penetration opening, dual failsafe Chipmunks must be used. However, several of the larger dose rates can be further reduced and fault studies will allow evaluation of the need for added shielding by the RSC.

[32] D. Beavis, "Estimate of the Radiation Exiting Penetrations for the ERL 50 kW Waveguide, Cable Buss Block, and Water Pipes", Dec. 6, 2006.

Deleted: 2.5
Deleted: 0.024
Deleted: 6.3
Deleted: 50
Deleted: 0.48
Deleted: 130
Deleted: 10
Deleted: 2.4
Deleted: 31
Deleted: 1
Deleted: 2.2
Deleted: 6.3
Deleted: 4.8
Deleted: 0.12
Deleted: 12
Deleted: 59
Deleted: 0.19
Deleted: 150
Deleted: 72
Deleted: 0.72
Deleted: 180
Deleted: 7.2
Deleted: 0.12
Deleted: 18
Deleted: 2.4
Deleted: 1.9
Deleted: 11
Deleted: 0.12
Deleted: 0.36
Deleted: 1.2
Deleted: 12
Deleted: 4.8
Deleted: 4.2
Deleted: 1.7
Deleted: 0.010
Deleted: 4.3
Deleted: 34
Deleted: 1.2
Deleted: 88
Deleted: 1

4.1.3. Maximum Credible Ozone Concentrations in the Prototype ERL Cave

Toxic gasses produced by ionizing radiation shows that ozone is among the most toxic and could be produced in quantities that cause the room to exceed the ACGIH Threshold Limit Value (TLV) level of 0.1 ppm. The TLV is the concentration that most workers could be safely exposed to 8 hours per day, 5 days a week. The highest radiation doses to air are where the highest local concentration will be located. There are no locations in the Prototype ERL beam line where electrons traverse air so only the radiation energy imparted by the Bremsstrahlung is considered in this analysis. The calculation model for ozone production in Swanson was used.[33]

The highest power level in the Prototype ERL is the energy deposited in the beam dump. This is 1.5 MW of 3.5 MeV electrons. For an uncollimated Bremsstrahlung beam from an optimum high-Z target, the production rate of ozone, P in liters per minute, is:

Deleted: 2

$$P = 1.7 \times 10^{-4}\ L\Omega$$

Where: L = meters of air

Ω = kW of electron beam power, 1500 kW for the beam dump

Deleted: 2

The beam dump is to be enclosed in a 1-foot lead shield with at most ~6" of air that the Bremsstrahlung beam passes through before encountering shielding. The actual air passage is much less. Using these conservative assumptions yields an ozone production rate of 0.0375 L/m.

[33] W. P. Swanson, Toxic Gas Production at Electron Linear Accelerators, SLAC-PUB-2470, February 1980.

As indicated by Swanson, the mean life of ozone in air at room temperature, T, is 50 minutes for a radiation environment. Any natural ventilation of the cave is conservatively ignored. The calculated saturated concentration of ozone, C_{sat}, is:

$$C_{sat} = PT/V$$

The 6 inch air volume around the dump is 12,400 in^3 (200 L) since the dump is 60 inches long x 19 inches diameter. C_{sat} for that air-gap between the dump and lead shield is 9.4×10^3 ppm. Assuming exchange of the air in the gap occurs with cave air (V of 20,000 ft^3 or 570,000 L), then saturation concentration is reduced by a factor of 200/570000 or to a level of 3.3 ppm, well above the TLV limit.

Deleted: 7.5

Based upon this calculated result, the beam dump is to be enclosed in a tight structure maintained free of air by using an inert gas such as helium, or the air space between the dump and the lead shield will be ventilated outside the cave into B912 where the ozone will significantly dilute to safe levels. Ozone measurements will be made during ERL commissioning to determine the actual magnitude of the ozone problem and to optimize the solution.

The credible sustainable losses of the electron beam are 1 W for the 3.5 MeV electrons and 50 W for the 25 MeV electrons. The length of air until the uncollimated Bremsstrahlung beam reaches shielding is no greater than 4 meters. Assuming that the ozone produced by these losses are continuous and reach saturation in the ERL cave, the ozone concentration is 0.0003

ppm for the 3.5 MeV beam loss and 0.01 ppm for the 25 MeV beam loss. Thus there are no unsafe ozone hazards from routine electron beam losses.

4.2. Identification of Potentially Hazardous Conditions from Oxygen Deficiency

OSHA defines an oxygen deficient atmosphere in 29CFR1910.146 as atmospheres containing less than 19.5% oxygen by volume. Normal atmospheres contain ~21% oxygen. Clinically observed effects from oxygen deficient atmospheres do not begin until the concentration falls to ~17%. If a small number of workers are exposed to potential oxygen deficient atmospheres, it is cost effective to use conservative controls for protection. However, with large exposed populations it is necessary to better establish controls at an appropriate level. With too little control, the injury rate may be unacceptably high. With too much control, the ability to operate efficiently is diminished.

Controls address two types of exposures: one where a known oxygen deficiency exists, the other in which an oxygen deficiency does not exist but there is a potential for its occurrence. The latter type exposure in particular applies to Prototype ERL, although a known oxygen deficiency could exist, for example, in a confined space such as a trench in which sample results show <19.5% oxygen. Work planning would determine the controls needed to safely work in this space. Controls would include periodic atmospheric monitoring, self-contained breathing apparatus, ventilation and confined space permits. The premise for controlling a potential oxygen deficiency is that the risk to workers should be no greater than risks in a general industry setting.

If exposure to reduced oxygen from an accidental event is stopped early enough, effects are reversible or avoided altogether. If not, permanent central nervous system damage or death can result. Major effects hindering escape from the vicinity of an oxygen deficiency are disorientation and unconsciousness. For personnel actively working, unconsciousness occurs at ~13% oxygen. A person in the general area of a catastrophic release of an inert gas and not hurt by a pressure wave would be alerted to the escaping gas by the noise and, if a cryogenic gas, the cold and resulting vapor cloud. ODH training is used to alert personnel to leave the area. In this case, personnel are trained to know that they can out-walk the expanding inert-gas cloud and safely walk out the nearest ERL cave exit.

The controls for potential oxygen deficiency are focused on the workers in the general area of the potential release. The survival of individuals in the general area is highly probable because of the engineering and administrative controls, monitoring systems, and training.

For the highly unlikely scenario in which an individual is in contact or very near failed equipment at the time of failure, the affected individual would be exposed to several hazards. These would include the powerful mechanical forces that resulted in a release of gas or cryogenic liquid, a pressure vessel failure for example, and the oxygen deficiency condition. In those extreme conditions, a person would lose consciousness in seconds and probably not survive.

Training for workers includes the methods to become aware that a release of inert gas has occurred, escape methods and use of appropriate oxygen monitoring devices and escape packs.

In addition to training on use of oxygen monitors and escape packs, ODH information is given in the facility specific courses required of all employees and users.

The C-AD SAD has a detailed description of the graded approach used to determine the controls necessary for areas having a potential for oxygen deficiency. It is recognized that these simplified methods cannot directly and quantitatively address the effects of the inert gas concentration gradients during transient release of the gas. The approach is to use a prescribed, simplified analysis to determine how an individual can have reasonable assurance that they are protected from a gas release. It treats the problem in a global way, by assuming uniform instantaneous mixing of the gas in all available volume within the enclosure. For nitrogen, helium and lighter gases, used at ERL this is reasonable. As already noted, individuals near the location of any release have higher likelihoods of injury or death. Thus a combination of the BNL SBMS ODH methods coupled with engineering judgment, assumptions on worker training, evacuation procedures and monitoring equipment are utilized in determining the controls needed to ensure an acceptably safe workplace.

The BNL SBMS models are used to determine the ODH classification of a building. The SBMS is based on the Fermi ODH model. The Fermi Model is a prescribed method to determine the necessary level of hazard control for a building having the potential for oxygen deficiency. A graded approach is used to implement hazard controls as a function of the computed ODH fatality rate. The fatality rate is selected as the hazard index since death is the most important, non-reversible effect of exposure to oxygen deficiency. The average US industrial fatality rate at the time the method was developed (1984), $\sim 10^{-7}$/hr, was defined to be the fatality rate at which

protective measures, other than training and postings are required.[34] Today, that rate is about $2x10^{-8}$/hr.

Areas of ERL which have potential ODH hazards have been evaluated as described above. A low oxygen concentration set point/alarm is 18%. Alarm set points below 19.5% are acceptable because these alarms warn of accidents and not of planned, routine working conditions. ODH sensors and alarms will be located on the walls within the accelerator enclosure at eye level, and within the helium recovery building. These areas are small enough such that alarms are visible and audible from any location within the rooms. The results of the ODH analyses for the affected areas of ERL are summarized in Table 4.2.[35]

Table 4.2 Potential ODH Areas at ERL

Building	Free Volume	Bounding Cryogenic Leak Location	Spill Rate (SCFM)	ODH Exhaust Fan Capacity (SCFM)
ERL Cave in B912	20,000 ft^3	Failure of 1-inch copper LN2 transfer line	3275	13,750
ERL Helium Recovery Building	9500 ft^3	Rupture of Kinney vacuum pump helium discharge line	1150	4850

The Prototype ERL Cave volume assumed for ODH analyses conservatively excludes the labyrinth volumes and accounts for the equipment in the cave. The Prototype ERL helium recovery building volume also accounts for the equipment in the room. The results of the ODH calculations show that both the cave and the helium recovery building are ODH 0 areas.

[34] T. Miller and P. Mazur, Oxygen Deficiency Hazards Associated with Liquefied Gas Systems: Derivation of a program of Controls, Am. Ind. Hyg. Assoc. J. 45(5):293-298(1984).
[35] BNL LESHC Meeting Minutes 06-06, May 18, 2006, Energy Recovery Linac in Building 912R. Karol, ERL ODH Calculations, January 8, 2008.

4.3. Identification of Potentially Hazardous Conditions from Electrical Energy

Chapter 3 describes the numerous electrical devices, magnets, power supplies, vacuum system, Klystron, RF systems, beam instrumentation and controls that are employed at Prototype ERL.

The sheer number of electrical devices and their conductors installed at accelerator and experimental facilities justifies recognizing electrical hazards as a major personnel hazard which requires detailed hazard controls. C-AD adheres to BNL SBMS subject area on Electrical Safety supplemented by the C-A-OPM 1.5 procedure series, order to mitigate electrical hazards. The hazards are described as follows:

AC Distribution

1. The primary AC distribution is at 13.8 kV. The feeds are underground to substations located at various sites. Transformers convert the 13.8 kV to 480 volts AC for subsequent distribution. Because of the very high hazard, the substations are fenced in with controlled access by the BNL Plant Engineering personnel. C-AD personnel do not normally have access to these areas.
2. Secondary distribution is 480 V, 3 phase, 60 Hertz, high resistance ground delta with remote sub-station ground-fault monitoring system. This is used directly in many pieces of equipment, motors, pumps, power supplies, etc. It is further transformed to 220/120 V, 3 phase for lights, utility outlets and all general needs. The hazard at 480 V is not only from a 480 V shock, but also from the possible arc formation at a short circuit. The short circuit currents are extremely high and an arc can create a shock wave and spray molten

copper and other materials. The procedures followed on 480 V circuits include training, LOTO or key lockout, circuit voltage testing, and the use of proper personnel protective equipment, the use of which is based on arc flash calculation.

High Voltage, Direct Current

1. Low Current - In many pieces of electronic equipment there are high voltage, low current, power supplies. While the current in some cases may present a direct shock hazard, in others it will be too low to cause a direct injury, but may lead to indirect injuries, such as, falls, bumps or other physical or electrical mishaps. ERL components are prominently marked for a high voltage hazard and may also be interlocked if a direct shock hazard exists. ERL equipment uses high voltage power supplies and each set-up is reviewed by the ASSRC before being energized.
2. High Current - In the range of 10-50 mA passing through the body significant physical harm may occur. The RF systems, as well as various pulsed magnets, kickers, and other devices, use potentially lethal power supplies. All such power supplies are properly marked; interlocks actuated on entry to the supply are hard wired to the power source; panel indicator lights show the power supply status; local-remote lockout switches are provided where more than one turn-on location is used. Shorting devices are provided, manual or automatic, especially on capacitor storage devices.

High Current, Low Voltage

Many devices use high currents, up to several thousand amperes, at relatively low voltages. In most cases the shock hazards are low but a short circuit on the lines, just as in the 480 V AC case, can lead to excessively high temperatures. Training, proper warnings, enclosing of conductors and interlock devices are used.

RF Voltages

RF voltages in the many kilovolt level are present in the accelerating system. Contact can result in shock and deep RF burns. The procedures as in the high voltage DC case are used.

4.4. Fire Hazards

The primary combustible loading at Prototype ERL consists of magnets, power and control cables, and beam diagnostic equipment. None of the materials is highly flammable, and with the possible exception of small amounts of control cable, all are expected to self-extinguish upon the de-energizing of electric power. Small amounts of flammable materials such as cleaning fluids may be routinely used in support of Prototype ERL maintenance. These materials will be purchased and controlled in accord with BNL's Chemical Management System, and stored in accord with SBMS Subject Area requirements.

Due to a system for diversion of radioactive liquid effluent to a hold-up pond, there are no environmental impacts due to release of contaminated water from the fire protection water

system. Water sprayed on potentially radioactive equipment may become slightly contaminated but would enter the sanitary system and be monitored before release. There are no significant amounts of combustible activated materials in the Prototype ERL and no significant radioactive particles would be present in smoke. Thus, there is no significant environmental hazard from a fire at the Prototype ERL.

To mitigate Prototype ERL fire hazards the systems are designed to industry codes and standards, there is fusing, limits exist on flammable gas volumes, there is fire detection, smoke detection alarms, sprinklers, control of combustible loading, ventilation systems, safety committee reviews, training for emergencies, control of ignition sources, and enhanced work planning.

4.5. Industrial Hazards

Standard industrial hazards such as lasers, vacuum and pressure, magnetic fields, cryogens, chemicals, and mechanical hazards are controlled by following the appropriate requirements in the BNL SBMS Subject Area.

4.6. Hazard Controls

The purpose of this section is to briefly summarize the various system features and administrative programs that help to control hazards or minimize risk of various hazards. It is noted that there are no credible offsite consequences from any Prototype ERL operations. Only workers or the environment are exposed to potential hazards.

4.6.1. Radiation Hazard Controls

The significant hazard at Prototype ERL is ionizing radiation, and operations are planned to be within DOE dose guidelines. The Department uses a graded system of controls such as shields, fences or barriers, locked gates, interlocks and procedures to match access restrictions with potential radiation hazards that satisfies both the BNL and DOE requirements.

Although the Laboratory site is a limited access site, service personnel from off-site or BNL non-radiation workers may work near ERL or may traverse the complex. The BNL policy is to administratively restrict the dose to 25 mrem per year to such personnel. The C-AD adheres to this policy by using shielding, postings, radiation monitoring devices that prevent radiation levels from exceeding set points, radiation work permits, work planning and RS LOTO.

Shielding for Prototype ERL is also designed to permit access by appropriately trained personnel to areas adjacent to the accelerator cave even with credible inadvertent beam loss.

There are restrictions on access for specific Prototype ERL facility areas. Access into the machine area is prevented by dual interlocks when the machine is operational. This includes the operation of the electron beams, the RF-Gun and 5-cell cavity. Personnel access to the roof is administratively prohibited during operations. Personnel are not allowed in the 1 MW Klystron power supply room during operations. A substantial area between the adjacent experimental

building and the Prototype ERL shielding on the west side is fenced and locked with personnel excluded during operations or with limited access.

4.6.1.1. Permanent Shielding and ALARA Dose

Shielding is used to reduce radiation levels in occupied areas to acceptable levels. The C-AD's shielding policy is given in Appendix 3, Shielding Policy. Potential access points to the Prototype ERL cave where personnel are prohibited during operations will be controlled by the Access Control System and the use of chicanes.

Shielding design analyses were performed for Prototype ERL, and ALARA was integrated into the overall facility design. Soon after beam is available, studies will be conducted at low power in order to verify the design and to optimize shielding, as needed, to help achieve an ALARA dose to personnel. Extensive radiation surveys of normal operations, as well as low-intensity simulated, credible beam faults, are conducted as required during commissioning, initial operations and for future, approved modifications. These surveys provide assurance and verification of the adequacy of the shielding and access controls. It is noted that the permanent shielding and access controls are configured to support the BNL Radiation Control Manual dose limit requirements, and are further enhanced to support the BNL Radiation Control Manual ALARA considerations.

The shield was planned with ALARA in mind such that, during normal operations, the dose rate on accessible outside surfaces of the shield is planned to be less than 0.25 mrem/h in

areas under access control. Areas under access control are all designated Controlled Areas or radiological areas as defined in the BNL Radiation Control Manual. The design of 0.25 mrem/hr is a guideline based on the actual ALARA design objective of less than 500 mrem per year. That is, assuming 100% occupancy at the shield face, a 2000-hour per year residence time yields an acceptable ALARA design objective of 500 mrem. The 500 mrem per year ALARA design objective is one half the design objective stated in 10CFR835 § 835.1002 (b).

Since there are many ways to control access and residence time by area designation, training, signage and work planning and since there is a decrease of dose rate with distance from the shield face, significantly higher shield face dose rates are acceptable. Therefore, shields are evaluated in terms of the guideline of 0.25 mrem/h, and instances where higher values may be acceptable have barriers and postings to indicate where area designations play a major role in minimizing radiation exposures.

The permanent bulk shielding materials used at Prototype ERL are primarily materials used at all existing accelerator facilities. For example, concrete and iron provide protection for personnel outside the accelerator cave and Klystron room. In addition to the materials mentioned above, paraffin, borated paraffin, polyethylene, borated polyethylene and Pb may be used for local shielding and in special circumstances, along with appropriate fire safety and industrial hygiene controls. Shielding configuration is closely controlled and may not be changed without review and approval of the C-AD RSC.

4.6.1.2. Radiation Detection and Radiation Interlocks

At locations external and/or adjacent to the Prototype ERL cave where unlikely but possible beam loss may occur, the use of hard-wired, fail-safe interlocking radiation monitors are used. This technique is standard practice at DOE accelerator facilities to maintain radiological-area classification compliance by providing a robust and rapid beam inhibit if any monitor exceeds a preset interlock limit. These radiation monitors are part of the QA level A1 safety-significant access-control-system for personnel protection.

Interlocking radiation monitors at C-AD are calibrated annually. These radiation monitors have been dubbed Chipmunks. They are tissue-equivalent ionization chambers that measure dose equivalent rate, in mrem per hour, from pulsed, mixed-field neutron and gamma radiation. In the ionization chamber, total ionization from a single radiation interaction event is collected. From this ionization, the Chipmunk circuitry produces one pulse for every pico-Coulomb of charge. If the circuit is overdriven, then the circuit produces a continuous train of pulses. This feature prevents the Chipmunk from jamming at very high dose rates. The range of the Chipmunk is about 1 mrem/h to 100,000 mrem/h. Chipmunks that are used as area-radiation monitors for personnel protection are located in accessible areas of the Prototype ERL facility as determined by the C-AD RSC. Chipmunks interlock the electron beam should radiation levels exceed limits defined by the C-AD RSC. The operation of Chipmunks with interlocking capability is fail-safe. Loss of power results in beam off for interlocked Chipmunks, and/or an alarm in the Prototype ERL Control Room adjacent to Building 912, a control room that is continually manned during routine operations. Additionally, the Chipmunk uses a built-in keep-

alive radiation source to monitor for failures. Such a failure will trigger an alarm in the Prototype ERL Control Room and/or an interlock when appropriate.

The interlock system is hard-wired and uses relay logic or PLCs to activate or deactivate a device or a magnet power supply to prevent beam from entering the fault area when a fault condition is detected. These systems are monitored by an independent computer, and the fault condition is logged.

Fixed-location area-radiation monitors such as Chipmunks also provide real-time dose information in B912. This dose rate data is logged every few minutes and stored on computers. General locations are initially selected for the real-time monitors; exact locations are determined based on beam-loss tests conducted during the Prototype ERL commissioning phase and on subsequent radiation surveys during operation. Final area radiation monitoring instrument locations are approved by the C-AD RSC.

Additional area monitors may be used to assess the long-term integrated dose in areas accessible to the public and other individuals not wearing personnel dosimeters. TLDs identical to those worn by radiation workers are mounted in locations in accordance with the BNL Radiological Controls Division procedures for this purpose. The dose recorded by these TLDs is indicative of the exposure of a person spending full time at that location. Neutron dosimeters, if their use is indicated for this purpose, will be attached to phantoms to simulate use by personnel.

4.6.1.3. Control of Radioactive Materials and Sources

When the electron beam is turned off, the remaining radiation hazard comes from activated material and sources. Activation of materials is expected to be either non-existent or insignificant at Prototype ERL. Activated material may be a direct radiation hazard, and may have removable contamination. All known or potentially activated items will be treated as radioactive material and handled in accordance with BNL Radiation Control Manual requirements. Unlabeled radioactive material that is accessible to personnel is placed in appropriately posted radiological area. Unless permitted by procedure, suspect radioactive material is surveyed by a qualified Radiological Control Technician (RCT) before release and then controlled in accordance with the survey results. Known radioactive materials are appropriately labeled before removal from an area that is posted and controlled. Radioactive items with removable contamination on accessible surfaces are packaged before removal from posted radiological areas. Workers whose job assignment involves working with radioactive materials receive documented training as radiological workers. Sealed radioactive sources below BNL accountable-activity-limits are treated as radioactive material. Accountable sealed radioactive sources are controlled, labeled and handled in accordance with the BNL SBMS Subject Area and the C-AD OPM. Accountable sealed radioactive sources that are in regular use are inventoried and leak-tested every six months.

4.6.1.4. Portable Radiation Monitors

Portable radiation detection instruments are used by RCTs and, potentially, other trained and approved C-AD personnel, to measure the radiation fields in occupied areas during commissioning and periodically during normal operations. The measurements made by RCTs will be used to establish and confirm area radiological postings. Instruments used for this purpose will be appropriate for the type and energy of the expected radiation, and will be calibrated in accordance with BNL requirements.

Experience at the C-AD accelerators and experiments have shown that contamination is not a significant problem at our facilities. Prototype ERL contamination is not expected, however, routine contamination surveys are conducted to verify that contamination is not a problem. Instruments used to frisk personnel who are exiting posted areas that might contain removable contamination are used as appropriate.

4.6.1.5. Personnel Dosimetry

All radiation workers wear appropriate TLDs and self-reading dosimeters as required by the BNL Radiation Control Manual while working in areas posted for radiation hazards. Dosimeters are exchanged on a regular basis and processed by a DOELAP-accredited laboratory. Records of the doses recorded by these dosimeters are maintained, and these records are available to the monitored individuals.

4.6.1.6. Access Controls Systems

The radiation security system design for access controls at ERL is classified as QA level A1 according to the C-AD QA plan, but the Department allows certain components to have a lower classification because failure is to a safe state or critical parts are redundant. The Access Controls Group installs industrial grade components only. This Group labels parts that pass incoming tests as A1 or A2 and places labeled parts in controlled storage areas. The Group maintains documentation for these acceptance tests.

The basic design principles of the access control system are:

- Either the beam is disabled or the related security area is secured
- Only wires, switches, relays, PLCs and active fail-safe devices, such as chipmunks, are used in the critical circuits of the system
- The de-energized state of the relay is the interlock status; that is, the system is fail-safe
- Areas where radiation levels can be greater than 50 rem/h require redundancy in disabling the beam and in securing the radiation area
- If a beam fails to be disabled as required by the state of its related security area, the system has backup or reach-back

Very High Radiation Areas are those areas that enclose primary beam. Very High Radiation Area hardware requirements comply with the BNL Radiation Control Manual. The C-AD RSC requires:

- Locked gates with two independent interlock systems
- Fail safe and redundant radiation monitors or other sensing devices
- Indicators of status at the facility in the Prototype ERL control room
- Warning of status change
- Emergency stop devices within potential Very High Radiation Areas

The C-AD RSC reviews interlock systems for compliance with requirements in the BNL Radiation Control Manual, SBMS requirements and C-AD OPM procedures. A Representative of the BNL Radiological Controls Division is a member of the C-AD RSC. The C-AD RSC defines the design objectives of the security system and approves the logic diagrams for relay-based circuits and state tables for PLC-based circuits. Cognizant engineers sign-off on wiring diagrams and the C-AD Chief Electrical Engineer approves each diagram. The C-AD Access Controls Group maintains design documentation.

The Access Controls Group conducts a complete functional check of all security system components at an interval required by the BNL Radiological Control Manual. In the checkout, the Access Controls Group checks the status of each door-switch on a gate, and each crash switch in the circuit. They check the interlocks and the off conditions for all security-related power-supplies to magnets and magnets that may act as beam switches. They check every component in a security circuit. As they test, they fill-out, initial and date the security system test-sheets obtained from the C-AD OPM. Test records are maintained as required by the C-AD OPM.

4.6.2. Control and Use of Hazardous Materials

The BNL Subject Area on Working with Chemicals is designed to ensure that workers are informed about the chemical hazards in their workplace. The Subject Area is maintained to comply with OSHA and EPA regulations concerning hazardous chemical communications. The BNL Subject Area on Working with Chemicals includes provisions for policy, training, monitoring exposure limits, handling, storing, and labeling and equipment design, as they apply to hazardous materials. Inclusive in the hazardous material protection program will be: procurement, usage, storing, inventory, access to the hazardous materials, use of appropriate Personal Protective Equipment (PPE), as well as housekeeping and chemical hygiene inspections of C-AD facilities. All BNL general employees receive appropriate general Hazard Communication training. Standards for general hazardous materials communication are specified by the BNL SBMS. Training to these standards is provided, and the training program records are maintained on the Brookhaven Training Management System (BTMS). C-AD staff working in ERL areas with a potential for exposure to hazardous chemicals receive appropriate job-specific training at the time of initial assignment and whenever a new hazard is introduced into the work area. A comprehensive listing of all Materials Safety Data Sheets for the chemicals used at the BNL site is available on the BNL web;[36] a goal is to have all chemicals accounted for in the BNL Chemical Management System (CMS). The system of work controls, which is part of the BNL ISMS, requires enhanced work planning for work with certain hazardous materials. The enhanced work planning ensures that adequate hazard controls and completion of required training are in place before work with hazardous materials begins.

[36] http://intranet.bnl.gov/esh/cms/

The use of flammable liquids is minimal. Light industrial chemicals may be in use such as acetone, ethyl alcohol that is used as general cleaning solvent, glass cleaner, PVC cement that is used for insulation work, and spray paint. Any use of flammable liquids follows BNL SBMS requirements.

4.6.3. Electrical Safety

The requirements for electrical safety are given in detail in the BNL SBMS and the C-AD OPM. Electrical bus work is covered to reduce/prevent electrical hazards in the power supply areas. In the Prototype ERL cave, exposed conductors will not be present and magnet buss is covered. In Controlled Access mode, even though the magnets will not be powered, the power supplies will not be locked out. Workers are trained to assume that magnets are powered in all cases and to treat them accordingly. In cases where workers are required to work on or near a specific magnet during Controlled Access or Restricted Access, the magnet power supply will be locked out and tagged out by the worker.

In some cases, it will be necessary to work near magnetic elements while powered. Appropriate control over access during this mode is maintained by the Prototype ERL Operations Supervisor. Work planning, Working on or Near Energized Conductor Permits and training requirements for entrants under these circumstances address concerns for inadvertent contact with powered conductors and exposure to magnetic fields.

4.6.4. Lockout/Tagout Program

Lockout/tagout procedures are specified in the C-AD OPM. All workers will be required to train in lockout/tagout procedures at a level consistent with their position. Where electrical hazards could be present to C-AD personnel working in an area, lockout/tagout procedures are implemented only by trained and LOTO authorized personnel.

Breaker/disconnect operations as part of the LOTO follows the electrical PPE requirements of the BNL SBMS subject area, Electrical Safety, which is equal to or more restrictive than NFPA 70E in order to prevent injury from arc flash accidents.

4.6.5. Safety Reviews and Committees

Standing safety committees are utilized throughout design, construction, commissioning and operation to focus expertise on safety, environmental protection, pollution prevention and to help maintain configuration control. See Chapter 3 for details of each committee's authority and responsibility.

4.6.6. Training

Worker training and qualification is an important part of the overall ESH plan for he C-AD. Training and qualification of workers is described in the Operations Procedures Manual

and the required training for individuals is defined in the BTMS. All staff personnel and experimenters require an appropriate level of training to ensure their familiarity with possible hazards and emergency conditions.

Workers are trained in radiation and conventional safety procedures at a level consistent with their positions. The number and type of training sessions/modules is assigned using a graded approach commensurate with the staff members' responsibilities, work areas, level of access, etc. An up-to-date record of worker training is kept in the BTMS database. Radiation worker access will only be allowed if adequate training is documented, except in cases of emergency. Training procedures and course documentation will be reviewed and updated periodically.

4.6.7. Personal Protective Equipment

Special clothing is used to protect workers who are exposed to the various electrical hazards and hazardous materials, including chemicals and radiation. The clothing for a particular application is selected considering the expected hazards; a variety of types of clothing is needed to meet all hazards. There are no predicted hazards that are unique to C-AD facilities; experience and compliance with DOE 10CFR851 ensure the adequacy of protective clothing in a particular application.

Respiratory protection is provided for workers who might otherwise be exposed to unacceptable levels of airborne hazardous materials, including chemicals, oxygen deficient atmospheres and radioactive materials. Respiratory protection is selected, used and maintained per OSHA 29CFR1910.134 and BNL Respiratory Protection Procedures.

4.6.8. Significant Environmental Aspects and Impacts

In support of BNL's broad mission of providing excellent science and advanced technology in a safe, environmentally responsible manner, the C-AD is committed to excellence in environmental responsibility and safety in all C-AD activities, including Prototype ERL operations and maintenance.

To provide excellent science and advanced technology in a safe and environmentally responsible manner the C-AD has, over the past 20 years, continuously reviewed the aspects of its operations in an effort to identify and accomplish waste minimization and pollution prevention opportunities. This process began in 1988 with the development of formal environmental design guides and a design review process. More recently, this effort has resulted in a further formalization of its processes under the guidelines of ISO 14001, the BNL ISO 14001 "Plus" Environmental Management System Manual, and SBMS subject areas governing ISO 14001 implementation. The BNL EMS program emphasizes compliance, pollution prevention and community outreach. Based on the aspect identification and analysis process in

the Subject Area, Identification of Significant Environmental Aspects and Impacts, the following aspects are examples of significant aspects at the Prototype ERL:

- Regulated industrial waste
- Hazardous waste
- Radioactive waste
- Atmospheric discharge
- Liquid effluents (not expected to be radioactive)
- Storage/use of chemicals or radioactive material
- Soil activation (not expected to be significant)

The environmental policy as set forth by BNL in the Environmental, Safety, Security and Health Policy is the foundation on which the C-AD manages significant environmental aspects and impacts. The formal management program is called the C-AD Environmental Management System. The Environmental Management System details may be found in the C-AD OPM.[37]

The process evaluations are documented in C-AD OPM Chapter 14. Waste streams are reviewed by the C-AD Environmental Compliance Representative (ECR) and a process evaluation denoting all material inputs and outputs for the each process of Prototype ERL is on file for existing processes. While waste streams at Prototype ERL will be the same as for other accelerators in the C-AD complex, although in much less quantity, a new process evaluation is performed for each new, significant process at Prototype ERL before use.

[37] http://www.rhichome.bnl.gov/AGS/Accel/SND/OPM/Ch01/01-10-02.PDF Environmental Management Program Description Collider-Accelerator Department and Superconducting Magnet Division

4.6.9. Hazard Reduction Associated with Waste Generation and Handling

Hazards associated with handling, packaging, treating and disposing of wastes generated during operation and modification of the facility are reduced when the generation of these wastes is minimized via pollution prevention (P2) techniques. The BNL approach to P2 associated with the operation and modification of accelerators and experiments is to address it during the design and construction phase. The objective is to minimize or eliminate the anticipated costs associated with hazardous and mixed waste generation as well as the treatment and disposal of wastes and the consumption of resources in all ERL life cycle phases: construction, operation, closure and decommissioning. Dollars spent during the design phases will provide for significantly reduced total costs over the life of the facility thus making more funds available for science. The following are the main objectives of the BNL P2 program:

- Minimize the amount of hazardous, radioactive and mixed wastes that are generated
- Minimize the cost of waste management
- Comply with federal, state and local laws, executive orders and DOE orders

The C-AD has implemented a P2 program as part of its commitment to comply with the Environmental Management System and ISO 14001. C-AD facilities have been registered to the ISO standard by a third party registrar since CY 2000. Modifications to C-AD operations have helped minimize hazards and costs associated with the generation of waste streams.

4.6.10. Fire Detection, Egress, Suppression and Response

The basis of design for fire detection, egress, suppression and response has been determined by coordination with the BNL Fire Protection Engineer (FPE) and an outside consulting group. FHAs are on the C-AD website. C-AD facilities comply with DOE fire protection guidelines as well as NFPA standards, or else have approved exemptions from the local Authority Having Jurisdiction (AHJ), which is the BNL Fire Safety Committee. The system is integrated with the site-wide system and is comprised of an automatic fire detection and suppression system that includes automatic fire suppression and rapid response capability coverage by the BNL Fire Department. Sprinklers are not provided at the Building 912 ceiling or roof levels, but rather at intermediate levels and at or within enclosures, as required. Because of the low flammability of the magnets, power cables, control cables and beam diagnostic equipment, they do not have automatic fire suppression systems, except for certain areas where significant risk of programmatic disruption exists. Manual and automatic fire detection and alarm initiation devices are installed throughout the facility. Where needed, smoke and/or heat detection devices are supplemented with pressure sensitive sensors, flammable gas detectors or other advanced detection devices such as high sensitivity smoke detection (HSSD). The appropriate portable fire extinguishers are provided for manual fire fighting efforts by trained staff. Fire alarms are alarmed at the BNL Fire Department, Building 599, and at BNL Police Headquarters, Building 50, thus providing continuous coverage for rapid fire response. This will put additional professional fire fighting resources into action within a short period. Roadways around the facility help protect it from surrounding wildfires. The buildings' roofs are non-combustible metal and do not ignite from burning ash from brush fires.

The means of egress for occupants is in accordance with NFPA 101. Enclosure exhaust fans are located within the ERL ring enclosure and may be used for rapid smoke removal.

4.6.11. Routine Credible Failures

Routine credible challenges to controls associated with worker and experimenter protection and with environmental protection are further detailed in Appendix 6, Qualitative Risk Assessments.

Beam losses at Prototype ERL are sufficiently attenuated by the bulk shielding for expected routine operation. Adequate shielding is provided to meet requirements established by the Laboratory for permissible exposure to radiation workers, non-radiation trained workers and members of the public during normal machine operations. Present Prototype ERL shielding designs reduce all normal radiation levels to well below the DOE ALARA guidelines.

Exposure to nearby facilities from Prototype ERL operations is less than 25 mrem per year and only a small fraction of the permitted 5 mrem per year at the site boundary, which are the Laboratory guidelines for radiation exposure for nearby facilities and the site boundary, respectively. Radiation exposure to maintenance workers is reduced through the design of equipment to simplify maintenance and the selection of materials to minimize failures. Through such reviews, maintenance activities will be controlled to maintain radiation exposures well

within the DOE annual limits, limits that are 5 to 20 times higher than the Department's ALARA guidelines.

There are no significant quantities of dispersible gaseous or liquid radioactive materials produced at Prototype ERL. Operations personnel are trained to confine, clean up and report all water spills to management. Experience indicates that periodic leaks may occur onto the concrete floor. Spilled water is sampled before release to the appropriate waste stream or is allowed to safely evaporate in place. No offsite threats to the public are present.

4.7. Evaluation of Potential Impacts to Workers, Public and Environment

The routine radiation dose to workers is well below the regulatory limits. Worker exposure to other industrial hazards such as oxygen deficiency hazard is controlled such that potential injury is improbable. Due to the short range of the radiations, the risks to the public are zero.

Worker radiation doses, even including the maximum credible beam fault dose on a frequent basis, would not cause deterministic effects such as burns or tissue damage unless an individual were in the beam enclosure during operations. The ACS, which is categorized as Safety-Significant, assures that such irradiations are not credible.

Cooling water spills are unlikely due to adherence to ASME codes and consensus design standards. Due to the lack of chemicals and dispersible radioactivity, operation of the Prototype ERL facility is anticipated to have virtually no impact on the environment.

4.8. Selection of Control Measures that Reduce Risks to Acceptable Levels

Credited controls have been selected to favor reliance on passive over active design features and to favor engineered controls over administrative controls. Mitigation of risks associated with the Prototype ERL facility is largely achieved with passive design features. The configuration of the Prototype ERL facility meets the C-AD mission of producing an intense source of pulsed electrons while satisfying safety requirements, foremost of which is the attenuation of prompt and secondary radiation. The passive shielding built into the Klystron, ring enclosure, and certain Prototype ERL structures (e.g., beam stop) was designed to passively reduce penetrating radiation to levels that are ALARA and to allow unencumbered access by users and staff in areas routinely occupied by personnel.

Active credited engineered controls are employed as needed to protect workers and users from radiation exposure, ODH and the equipment from extensive fire damage. For example, the ACS provides beam trips in response to access violations into hazardous areas or detection of elevated radiation levels in certain potentially occupied areas. Another example of an active engineered control is the ring enclosure ventilation system that activates upon ODH alarms. An example of engineered equipment protection is the sprinkler system. Proper function of active controls is ensured by required surveillance/maintenance requirements specified in the ASE.

Certain credited administrative controls have also been identified. To a large extent, required administrative controls are addressed by ISM programs already well established and maintained at BNL (e.g., radiation protection, electrical safety, etc.). Administrative controls specific to Prototype ERL are addressed by ASE requirements to ensure their safety function is maintained.

4.9. Listing of All Credited Engineered and Administrative Controls

Table 4.9.a Summary of Credited Engineered Controls

	Credited Engineered Control	Applicable Events
1	Chipmunk-interlocked beam cutoff on abnormal radiation levels	Table A.6-4 Qualitative Risk Assessment – Radiation External to Enclosure
2	Access-controlled gates	Table A.6-4 Qualitative Risk Assessment – Radiation External to Enclosure
3	Ionizing radiation shielding	Table A.6-4 Qualitative Risk Assessment – Radiation External to Enclosure
4	Fire detection and suppression systems	Table A.6-11 Qualitative Risk Assessment – Fire
5	ODH monitoring system	Table A.6-12 Qualitative Risk Assessment – Oxygen Deficiency Hazards (ODH)
6	ASME rated pressure relief valves and burst disks, ASME compliant pressure vessels and piping or equivalent	Table A.6-7 Qualitative Risk Assessment – Conventional/Industrial Hazards
7	Remote sub-station ground-fault monitoring system	Table A.6-3 Qualitative Risk Assessment – Electric Shock/Arc Flash

Table 4.9.b Summary of Credited Administrative Controls

	Credited Administrative Control	Applicable Events
1	Review of radiation safety by C-AD RSC	Table A.6-4 Qualitative Risk Assessment – Radiation External to Enclosure
2	Configuration controlled ACS drawings and computer codes; annual ACS testing	Table A.6-4 Qualitative Risk Assessment – Radiation External to Enclosure
3	Configuration controlled shield drawings and calculation codes	Table A.6-4 Qualitative Risk Assessment – Radiation External to Enclosure
4	Annual fire detection and suppression system tests	Table A.6-11 Qualitative Risk Assessment – Fire
5	ODH monitor calibrations	Table A.6-12 Qualitative Risk Assessment – Oxygen Deficiency Hazards (ODH)
6	Relief valve and burst disk maintenance according to ASME standards	Table A.6-7 Qualitative Risk Assessment – Conventional/Industrial Hazards
7	Ground-fault alarm testing	Table A.6-3 Qualitative Risk Assessment – Electric Shock/Arc Flash

4.10. Description of the Maximum Credible Incident

The maximum credible incident is the incident in terms of property loss or injury to personnel that would result assuming all installed safety systems functioned as designed.

4.10.1. Maximum Credible Fire Incident

The objectives of presenting no threats to the public health and welfare or undue hazards to life from fire are satisfied. The designs of all C-AD facilities comply with the "Life Safety Code" (NFPA 101) and NYS Building Code and with the specific requirements of the

Occupational Safety and Health Standards (CFR29, Part 1910) applicable to exits and fire protection.

Welding gases and flammable/explosive gases are used and stored according to NFPA codes and standards applicable to experimental installations. Gases are stored in compressed gas cylinders that meet Department of Transportation (DOT) specifications. Large quantities of gas are forbidden in accelerator areas. There are no off-site threats to the public should a cylinder fail.

The facility is designed with an "improved risk" level of fire protection. The design requirements that were used are found in: 1) DOE Order 420.1, Facility Safety and 2) DOE Order 6430.1A, General Design Criteria. Prototype ERL is fitted with fire detectors and fire protection systems where appropriate. Fires are expected to be extinguished by these protective systems. Combustible loading in the Prototype ERL beam cave and other power supply areas consists of magnets, power cables, control boards, control cables and beam diagnostic equipment. None of the materials are highly flammable, and with the possible exception of small amounts of control cable and circuit boards, all are expected to self extinguish upon de-energizing of electric power. Induced radioactivity is deeply entrapped in concrete shielding and is not dispersible in a fire. There are no offsite threats to the public from a fire.

The personnel risks associated with the fire hazard are acceptable considering the type of building construction, the available exits, the fire detection systems, the fire alarm systems and

the relative fire-safety of the components and wiring. Emergency power and lighting is available in accordance with fire industry standards.

Travel distances to exits at Prototype ERL do not present a problem. In structures of low or ordinary hazard and in structures used for general or special industrial occupancy, NFPA 101 permits travel distances up to 120 m to the nearest exit if the following provisions are provided in full:

- Application is limited to one-story buildings only
- Interior finish is limited to Class A or B materials per NFPA definitions
- Emergency lighting is provided
- Automatic sprinklers are provided in accordance with NFPA 101 or exempted by the local AHJ
- Extinguishing system is supervised

Smoke and heat venting by engineered means or by building configuration are provided to ensure that personnel are not overtaken by spread of fire or smoke within 1.8 m of floor level before they have time to reach exits.

DOE has established limits of $1,000,000 for a Maximum Possible Loss and $250,000 for a Maximum Credible Loss mandating the installation of automatic suppression systems in locations where those limits are exceeded. Prototype ERL design meets these criteria. It is noted

that Prototype ERL is an experimental facility with a limited life time that allows judgment by the AHJ in determining the fire protection requirements.

Based on previous experiences at C-AD, the predominant sources of fire initiation have come either from electrical malfunctions or overheating in beam-line components such as magnets, which have caused a break down of the electrical insulation and subsequent arcing. The maximum credible fire incident was determined by the AHJ to be a fire in one magnet and damage to the two adjacent magnets. While the klystron's 100 kV transformers have 800 gallons of oil, it was felt that smoke detectors, interlocks to turn off power to the 100 kV transformers, fire sprinklers, low-flammability oil in the transformers, secondary containment and onsite fire responders would result in a less credible fire incident.

4.10.2. Maximum Credible Electrical Accident

The electrical systems and equipment in use at Prototype ERL is the same as that in use at C-AD facilities for many years. This statement does not minimize the inherent dangers; rather, it indicates that the technical personnel are experienced on accelerator circuits and devices. Additionally, they are qualified to work on these systems. Every engineer, technician and electrician that is expected to work on the facility equipment is adequately trained. The training includes an awareness of potential hazards and knowledge of appropriate safety procedures and emergency response plans. Training is documented and a list of authorized personnel is kept on a network electronic database (BTMS) and is available to supervisors.

The C-AD staff is familiar with the types of electrical hazards that relate to the accelerators and experimental areas. All required safety features are installed in and on the electrical equipment. The groups that maintain, repair, test and operate the equipment have the knowledge, tools and experience to perform safely. Work planning, which includes electrical safety procedures, working on or near energized conductor permits and, when required for high hazard work, job safety analyses is done to adhere to the safe practices mandated by OSHA and the BNL SBMS Subject Area on Electrical Safety. Periodic retraining improves the safety margin. Thus, the potential risk for a serious electrical shock is minimized to levels currently accepted throughout the industry.

4.10.3. Risk Assessment to Workers, the Public and the Environment

4.10.3.1. Radiation Risks

The routine radiation dose to workers is well below the DOE regulatory limits of 10CFR835. The range of doses received by C-AD radiation workers in FY2007, which was a typical recent year with the RHIC nuclear physics program, was from zero to ~60 mrem. Experience shows the average exposure of C-AD radiation workers is close to zero mrem during the RHIC nuclear physics program. The dose to an average C-AD radiation worker is only a small fraction of the regulatory limit, and the increase in fatal cancer risk after a lifetime of radiation work, 50 years, is insignificant, <<0.06%[38] compared to the naturally occurring fatal cancer rate of nearly 20%. Additionally, data shows the radiation burden for the C-AD worker

[38] This assumes a risk coefficient of $4x10^{-4}$ per rem for workers from NCRP Report No. 115, Risk Estimates for Radiation Protection (p. 112) and a 50-year career at 30 mrem per year.

has been declining for the past four decades. The risks to the public are an extremely small fraction of worker risk.

Worker doses at Prototype ERL, even including the maximum credible beam fault dose on a frequent basis, would not cause deterministic effects such as burns or tissue damage unless an individual were in the Prototype ERL accelerator cave during operations. The ACS, which is categorized as Safety-Significant, assures that such irradiations are not credible.

4.10.3.2. Environmental Risks from Radiation

There are no credible risks to the environment from groundwater contamination caused by Prototype ERL operations. Any spill of the insignificant levels of radioactive cooling water from a failed pipe or hose would have no environmental impact.

4.10.3.3. Fire Risks

Based on the extensive use of fire protection as determined by the BNL Fire Protection Engineer, the appropriate location of exits and the use of emergency ventilation exhaust systems, high or medium consequence levels are extremely unlikely. Thus, the fire risk is acceptable.

4.10.3.4. Electrical Risks

Based on the use of formal C-AD electrical safety procedures, working on or near energized conductor permits and, for high hazard work, job safety analyses, high or medium consequence levels are extremely unlikely. Thus, the risk is acceptable.

4.10.4. Professional Judgment Issues

The initial screening of Prototype ERL hazards was performed using qualitative engineering judgment. The C-AD engineering, operating and safety staff has many years of experience with BNL accelerators and experiments. This experience influenced the analyses of Appendix 2.

Experience has also influenced the choice of conservative maximum hourly routine and faulted beam power limits which have been used as the bases for the shielding and ALARA analyses. These judgment issues have always been and will continue to be verified by beam fault studies.

4.10.5. Methods Used in Evaluation of Radiological Hazards

Techniques employed in the evaluation of radiological hazards include the use of empirical formulae and graphs[39] and the Monte Carlo Program MCNPX[40]. MCNPX is probably the most widely used transport Monte Carlo code.

Past radiation dose rate measurements at C-AD accelerators have been made which show that dose equivalent and activation calculations are overestimates and should be regarded as upper limits.[41]

[39] NCRP Report No. 144, Radiation Protection for Particle Accelerator Facilities
[40] L. S. Waters, Ed., "MCNPX USER'S MANUAL," LANL Report TPO-E83-UG-X-0001, (1999). See also H.G. Hughes, R.E. Prael, R.C. Little, "MCNPX – The LAHET/MCNP Code Merger," X-Division Research Note, 4/22/97. The version number of the code used in this note is 2.1.5.
[41] A.J. Stevens, "Summary of Fault Studies at RHIC." BNL C-A Dept ES&F Note 156 (2000). http://server.c-ad.bnl.gov/esfd/epstechnote.html

Accelerator Safety Envelope

Title of Facility: Prototype Energy Recovery Linac (ERL)

Date of Initial ASE: December 30, 2008

Subsequent Revision Dates:

Version of the SAD that the ASE applies to: Prototype ERL SAD 6-30-08

Signature of Preparer:

_____

Signature of Collider-Accelerator Associate Chair for Superconducting Accelerator R&D:

_____

Signature of Collider-Accelerator Department Chair:

_____

Signature of Nuclear and Particle Physics Associate Laboratory Director:

_____

Signature of Deputy Director for Operations:

_____

ASE Contents:

Section 1. Introduction 2
Section 2: BNL Safety Envelope Limits 3
Section 3: Corresponding Prototype ERL Safety Envelope Parameters 3
Prototype ERL Beam Limits in Terms of Electron Energy and Beam Power 4
Control of Beam Loss 4
Access Controls 4
Fire Protection 5
Section 4: Engineered Safety Systems Requiring Calibration, Testing, Maintenance, and Inspection 5
Section 5: Operations Envelope - Administrative Controls 6

Section 1. Introduction

The bases for the ASE and the connections between the engineered and administrative bounding conditions are given in Chapter 5 of the Prototype ERL SAD 6-30-08.

The ASE is divided into 5 Sections. **Section 1** identifies the ASE change control method, the accountability policy for violations and the emergency action policy. Section 1 is followed by a hierarchy of boundaries that support safe operation. The top level limits are listed in **Section 2**. Section 2 defines the absolute limits for hazards not routinely encountered in an industrial operation such as ionizing radiation beams. **Section 3** limits are critical operating parameters that help ensure the Prototype ERL will not exceed the absolute limits in Section 2. **Section 4** of the ASE specifies the limits applicable to engineered safety systems used to maintain operations within the limits in Sections 2 and 3. Engineered safety systems require calibration, testing, maintenance, and inspection. The frequency of testing and calibration is specified in Section 4.

Section 5 is an Operations Envelope that helps ensure the ASE will not be exceeded. Section 5 defines practices that help limit both not-routinely and routinely encountered hazards in an industrial operation (e.g., Work Planning). Variations of operating parameters within the Operations Envelope are considered normal operations. Variation outside the Operations Envelope but within the ASE Sections 2, 3 and 4 limits merits appropriate attention; however, it does not require termination of Prototype ERL activities or notification of DOE.

1.1 The reference to the method used by the Collider-Accelerator Department for change control of the ASE is the BNL Subject Area on Accelerator Safety.

1.2 A variation beyond the boundaries described in Sections 2, 3, and 4 of this ASE shall be treated as a violation of the ASE and shall be a reportable occurrence, as defined by the BNL SBMS Subject Area on Occurrence Reporting. A violation is defined as not satisfying a Requirement or its specific Authorized Alternative. C-A Department staff shall make notifications of occurrences according to the requirements in the C-A Operations Procedure Manual.

1.2.1 If a Requirement is not satisfied and it has a specific Authorized Alternative, implement the Authorized Alternate or stop the activity that uses the affected equipment within one hour.

1.3 Emergency actions may be taken that depart from these approved ASE Requirements when no actions consistent with the Requirements are immediately apparent and when these actions are needed to protect the public, worker and environmental safety. These actions shall be approved by the person in charge of facility safety, as defined in the operating procedures, when the emergency occurs and shall be reported to C-AD management within 2-hours.

Section 2: BNL Safety Envelope Limits

This section contains the absolute limits that BNL places on Prototype ERL operations to ensure that BNL meets regulatory limits established to protect our environment, public and staff/visitors and that those operations are conducted within the assumptions of the Prototype ERL safety analyses documented in the Prototype ERL SAD, 6-30-08. BNL Safety Envelope Limits for Prototype ERL operations are:

2.1. Less than 25 mrem in one year to individuals in other BNL Departments or Divisions adjacent to this Collider-Accelerator Department accelerator facility.

2.2. Less than 5 mrem in one year to a person located at the site boundary.

2.3. Offsite drinking water concentration and on-site potable well water concentration must not result in 4 mrem or greater to an individual in one year.

2.4. Less than 1250 mrem in one year to a Collider-Accelerator Department staff member.

2.5. Less than 10,000 pCi/L in the BNL sanitary sewer effluent due to liquid discharges from Prototype ERL facilities.

2.6. In order to protect groundwater, if the annual activity concentration of sodium-22 or tritium in leachate is calculated to exceed 5% of the Drinking Water Standard, then a cap shall be used unless BNL Management is convinced otherwise.[1]

2.7. All emissions from Prototype ERL facilities are managed in accordance with the Air Emissions subject area.[2] If emissions are anticipated to exceed 0.1 mrem per year to the Maximally Exposed Individual, actions will be taken to ensure operations comply with NESHAP requirements including continuous emissions monitoring and permitting.

In order to assist C-AD in verifying and auditing ASE bounding conditions in Section 2, a Compliance Implementation Matrix identifying the ASE requirement, the implementing

[1] BNL SBMS Accelerator Safety Subject Area, Design Practice for Known Beam Loss Locations.
[2] BNL SBMS Subject Area, Radioactive Airborne Emissions.

procedure(s) and the responsible persons is maintained by C-AD management along with the bases for each ASE requirement.

Section 3: Corresponding Prototype ERL Safety Envelope Parameters

This section identifies the measurable limitations on critical operating parameters that, in conjunction with the specifically identified hazard control considerations established by the facility design and construction, ensure that Prototype ERL operations will not exceed the corresponding Safety Envelope Limits discussed in Section 2. These parameters are derived from the safety analyses described in the Prototype ERL SAD, 6-30-08. Prototype ERL safety envelope parameters are:

Prototype ERL Beam Limits in Terms of Electron Energy and Beam Power

3.1 Electron energy limit of 3.5 MeV for the super-conducting RF gun.

3.2 The power source of the superconducting gun is limited to delivering 1.5 MW of power to the gun.

3.3 Electron energy limit of 25 MeV for the Prototype ERL ring.

3.4 Electron beam power shall not exceed the equivalent of 10 MW of instantaneous power for the electron beam in the Prototype ERL ring.

3.5 The power source for the five-cell cavity will be limited to delivering a maximum of 60 kW of power to the cavity.

3.6 A beam power of 1.5 MW for a 3.5 MeV electron beam striking the beam dump.

The above limits are the maximum beam energy or beam power the Prototype ERL is capable of and cannot be exceeded without changing the structures, systems and components (SSC). Changing ERL prototype SSC requires authorization by C-AD management.

Control of Beam Loss

3.7 Beam-loss-monitors, area-radiation monitors and area-radiation survey results shall be used in order to maintain beam loss “As Low as Reasonably Achievable” as defined in the BNL Radiological Manual. The objective for controlling personnel exposure is to maintain exposure levels below an average of 0.5 mrem per hour, which is to be averaged over one work-month (80 mrem), and be as far below this average as is reasonably achievable.

Access Controls

3.8 The Access Controls System shall be functional during operations with beam. That is, locked gates to the accelerator enclosure shall turn the beam off if unlocked, unfastened or opened when beam is on.

3.9 During the running period, area radiation monitors that are interfaced with the Access Controls System shall be within their calibration date.

3.10 During the running period, the locations of area radiation monitors interfaced with the Access Control System are to be configuration controlled.

Fire Protection

3.11 During periods of beam operation, when access to the primary beam areas is prohibited the installed fire detection and protection systems shall be operable.

Authorized Alternative: Within 2 hours of discovery, the Department Chair or designee may allow partial or full inoperability of any fire detection or protection system for up to 80 hours with beam operations if the benefit of continuing Prototype ERL operations is judged to outweigh the potential risk of fire damage. Operating procedures shall specify the compensatory actions to be taken during inoperability.

3.12 Prototype ERL magnets and power supplies may be energized if the smoke detection system for the energized area can transmit an alarm to summon the BNL Fire/Rescue Group.

Authorized Alternative: The Operations Coordinator, ESH Coordinator or designee may allow partial or full inoperability of any fire detection system or manual alarm station in occupied areas as long as a Fire Watch is posted who can verbally communicate with the BNL Fire/Rescue Group by radio or phone.

In order to assist C-AD in verifying and auditing ASE bounding conditions in Section 3, a Compliance Implementation Matrix identifying the ASE requirement, the implementing procedure(s) and the responsible persons is maintained by C-AD management along with the bases for each ASE requirement.

Section 4: Engineered Safety Systems Requiring Calibration, Testing, Maintenance, and Inspection

The systems and requirements for calibration, testing, maintenance, accuracy or inspections necessary to ensure the integrity of the Prototype ERL safety envelope parameters during operations are given in this section:

4.1. The Access Control System shall be functionally tested in accordance with requirements in the BNL Radiation Control Manual.

4.2. Prototype ERL ventilation exhaust fans used to prevent an oxygen deficiency event shall undergo annual testing (not to exceed 15 months).

4.3. Prototype ERL fire protection shall undergo annual testing (not to exceed 15 months).

4.4. Area radiation monitors shall undergo annual testing (not to exceed 15 months).

4.5. Radiological barriers shall undergo annual visual inspection (not to exceed 15 months).

In order to assist C-AD in verifying and auditing ASE bounding conditions in Section 4, a Compliance Implementation Matrix identifying the ASE requirement, the implementing procedure(s) and the responsible persons is maintained by C-AD management along with the bases for each ASE requirement.

Section 5: Operations Envelope - Administrative Controls

Administrative controls necessary to ensure the integrity of the Prototype ERL safety envelope parameters during operations are:

5.1. Minimum Prototype ERL Control Room Staffing

5.1.1. Prototype ERL Control Room: one Trained Operator and one other person (i.e., ERL operator-in-training or ERL physicist) shall be on duty when Prototype ERL beam is in operation. During beam operations, one of the two must remain in the Prototype ERL Control Room at all times.

Authorized Alternative: If extra person (i.e., ERL operator-in-training or ERL physicist) is incapacitated, the remaining operator may continue operations as long as manning requirements are restored within two hours.

5.2. On-shift operations staff shall be trained and qualified on their safety, operational and emergency responsibilities. Records of training and qualification shall be maintained on the Brookhaven Training Management System (BTMS).

5.3. Work planning and control systems shall comply with the requirements in the C-A Operations Procedure Manual.

5.4. Environmental management shall comply with the requirements in the C-A Operations Procedure Manual.

5.5. Experiment modification and review shall comply with the requirements in the C-A Operations Procedure Manual.

5.5.1. Each upgrade in the Prototype ERL beam parameters or change of Prototype ERL configuration shall be reviewed before running with beam.

5.6. Annually, the C-AD Accelerator Systems Safety Review Committee shall review Prototype ERL's routine operations and facility for safety.

5.6.1. Prototype ERL may lie dormant for a period greater than one year between runs and does not require a review during the dormancy period.

5.7. Industrial hazards shall be controlled in accordance with the applicable portions of the BNL SBMS Subject Area.

5.8. Radiological area classifications during operations shall be in accord with requirements in the BNL Radiation Control Manual.

In order to assist C-AD in verifying and auditing ASE bounding conditions in Section 5, a Compliance Implementation Matrix identifying the ASE requirement, the implementing procedure(s) and the responsible persons is maintained by C-AD management along with the bases for each ASE requirement.

Accelerator Safety Envelope

Title of Facility: Prototype Energy Recovery Linac (ERL)

Date of Initial ASE: December 30, 2008

Subsequent Revision Dates:

Version of the SAD that the ASE applies to: Prototype ERL SAD 6-30-08

Signature of Preparer:

Edward T Lessard

Signature of Collider-Accelerator Associate Chair for Superconducting Accelerator R&D:

Ilan Ben-Zvi

Signature of Collider-Accelerator Department Chair:

Signature of Nuclear and Particle Physics Associate Laboratory Director:

Steven E. Vigdor

Signature of Deputy Director for Operations:

Department of Energy
Brookhaven Site Office
P.O. Box 5000
Upton, New York 11973

Mr. Michael J. Bebon
Brookhaven Science Associates, LLC
Brookhaven National Laboratory
Upton, New York 11973

FEB - 3 2009

Dear Mr. Bebon:

SUBJECT: APPROVAL OF THE PROTOTYPE ENERGY RECOVERY LINAC (ERL) ACCELERATOR SAFETY ENVELOPE (ASE)

Reference: Letter, from M. Bebon, BSA to M. Holland, SC-BHSO, Subject: Request for Approval of Prototype Energy Recovery Linac Accelerator Safety Envelope dated December 30, 2008.

The Department of Energy (DOE) Brookhaven Site Office (BHSO) has reviewed your request for approval of the ERL ASE, including a review of all associated documents. Based on our review, the ERL ASE and the Unreviewed Safety Issue (USI) for the gun power physical limit increase are approved.

While the ASE meets the requirements of DOE O 420.2B, as continuous improvement and to help ensure satisfactory review outcomes in the future, we request that the following be considered during the next triennial review of the ERL SAD/ASE:

- Utilize a more robust and logical hazard analysis in the SAD to identify the individual credited controls that will become the bounding conditions and limitations of the ASE.

- Eliminate superfluous information from the ASE such as generic limits and industrial hazards that are not unique to the accelerator facility.

Future DOE BHSO authorizations to commission/operate ERL will be based on a review of the Authorization Package including a validation of the adequacy of the facility safety basis. If you have any questions, please contact Patrick Sullivan, of my staff at extension 4092.

Sincerely,

M. Holland

Michael D. Holland
Site Manager

cc: R. Desmarais, SC-BHSO
M. Dikeakos, SC-BHSO
P. Sullivan, SC-BHSO
R. Karol, BSA
E. Lessard, BSA
D. Lowenstein, BSA
C. Parnell, BSA

Collider-Accelerator Department

Collider-Accelerator Department(C-AD) Safety Assessment Document (SAD)

May 2011

Edward T Lessard — 8-5-11

Edward Lessard, Associate Chair for ESSHQ, C-AD — Date

Ray Karol — 8-5-11

Ray Karol, ESSHQ Division Head, C-AD — Date

8/8/11

Dana Beavis, C-AD Radiation Safety Committee Chairman — Date

8/5/11

Thomas Roser, Chairman, C-AD — Date

Steven E. Vigdor — 8/8/11

Steven Vigdor, Associate Laboratory Director, NPP — Date

8/19/11

Michael Bebon, Deputy Director Operations, BNL — Date

Accelerator Safety Envelope

Title of Facility: Prototype Energy Recovery Linac (ERL)

Date of Initial ASE: 12/2008

Subsequent Revision Dates: 5/2011, 6/2012

Signature of Preparer:

Edward T. Lessard 6-6-12

Signature of Collider-Accelerator Associate Chair for Accelerator R&D:

Ilan Ben-Zvi

Signature of Collider-Accelerator Department Chair:

Thomas Roser

Signature of Nuclear and Particle Physics Associate Laboratory Director:

P. Vigdor

Signature of Assistant Laboratory Director for Environment, Safety & Health:

M A Morris 6/21/12

This ASE is associated with the
May 2011
C-AD Safety Assessment
Document

Section 1: Introduction

This ASE defines the Prototype ERL ASE Credited Controls and their Supports that are unique to accelerators necessary to ensure safe operations and to ensure that the potential accelerator-related risks to the public, workers and environment are minimized. Other legal and DOE Order requirements not unique to accelerators are implemented via compliance with the BNL Standards Based Management System (SBMS) Subject Areas.

1.1. The method used by the Collider-Accelerator Department (C-AD) for change control of this ASE is described in the BNL Subject Area on Accelerator Safety.

1.2. A variation away from the Credited Controls and their Supports, which are described in Sections 2, 3, and 4 of this ASE, must be treated as a violation of the ASE and must be a reportable occurrence, as defined by the BNL SBMS Subject Area on Occurrence Reporting. A violation is defined as not satisfying a Credited Control, its Supports or its Authorized Alternative. C-AD staff must make notifications of occurrences according to the requirements in the C-AD Operations Procedure Manual.

1.3. Section 5, Administrative Controls, are not Credited Controls but provide defense-in-depth that supports compliance with the requirements in Sections 2 through 4. A violation of Section 5 requirements will be evaluated by management to determine if a reportable occurrence is needed.

1.4. If a Credited Control or its Supports are not satisfied and it has a specific Authorized Alternative, then take immediate actions to implement the Authorized Alternative or stop the activity that uses the affected equipment as soon as practicable.

1.5. If a Credited Control Requirement or its Supports have no specific Authorized Alternative and is not satisfied, then stop the activity that uses the affected Credited Control as soon as practicable.

1.6. Emergency actions may be taken that depart from a Credited Control or its Supports when no actions consistent with the Credited Control are immediately apparent and when these actions are needed to protect the public, worker and environmental safety. These emergency actions must be approved by the person in charge of facility safety, as defined in the operating procedures, when the emergency occurs and must be reported to C-AD management within 2-hours.

Section 2: Credited Controls

This section contains the Credited Controls that limit accelerator operations in order to protect the environment, workers, and the public by ensuring that those operations are conducted within the assumptions in the approved C-AD SAD. Credited Controls for Prototype ERL operations are:

Credited Controls for Maximum Credible Incident

The following limits are the maximum beam energy and beam power that the Prototype ERL is capable of. These Credited Controls cannot be exceeded without changing the structures, systems and components (SSC) of the Prototype ERL. Changing Prototype ERL SSC requires authorization by C-AD management.

2.1. Electron kinetic energy must be limited to 3.5 MeV for the superconducting RF gun.

2.2. The power source of the superconducting gun must be limited to delivering 1.5 MW of power to the gun.

2.3. Electron kinetic energy limit must be limited to 25 MeV for the Prototype ERL ring.

2.4. Electron beam power must not exceed the equivalent of 10 MW of instantaneous power for the electron beam in the Prototype ERL ring.

2.5. The power source for the five-cell cavity must be limited to delivering a maximum of 60 kW of power to the cavity.

2.6. Beam power must not exceed 1.5 MW for a 3.5 MeV electron beam striking the beam dump.

Credited Control for Radiation Hazard Due to Access

2.7. During beam operations, an access control system (ACS) must prevent access to beam.

Credited Control for Oxygen Deficiency Hazard (ODH)

2.8. Engineered systems (interlocks and alarms) must be in place to minimize the likelihood of injury/illness from a release of inert gas.

Section 3: Credited Control Supports

This section identifies the measurable limitations on Supports for Credited Controls that ensure that Prototype ERL operations do not exceed the Credited Controls in Section 2. These Credited Control Supports are derived from the safety analyses described in the approved C-AD SAD. They are:

Credited Control Supports to Protect against Radiation

3.1. Before beam or other radiation producing operations (e.g. electron gun or 5-cell cavity operations and testing), Prototype ERL enclosures must have all shielding properly in place and configuration controlled.

3.2. During beam or other radiation producing operations (e.g. electron gun or 5-cell cavity operations and testing), the ERL ACS must be functional. This means that the portions of the ACS that prevent exposure to beam radiation or RF generated x-rays inside enclosures and that remove beam or turn off RF when excessive beam loss or x-ray radiation occurs are functional.

3.3. During the beam or other radiation producing operations, area radiation monitors that are interfaced with the ERL ACS to remove beam when excessive beam loss is sensed must be within their calibration date.

3.4. During beam or other radiation producing operations, the locations of area radiation monitors interfaced with the ERL ACS must be configuration controlled.

Credited Control Supports to Protect against an ODH in ERL Accelerator Enclosure, Compressor/Vacuum/Water Building, and the EEBA[1] and NEBA[2] Portions of B912

3.5. When cryogens are charged in the system, exhaust fans and the ODH portion of the ERL ACS must be operable, that is, when the oxygen concentration falls below 18% (nominal) in either the ERL accelerator enclosure or the ERL Compressor/Vacuum/Water Building the associated ODH fan must turn on.

Authorized Alternative: Upon discovery that either exhaust fan is not operable or the ODH portion of the ERL ACS is out of service, entry to the affected building (i.e., ERL accelerator enclosure or ERL Compressor/Vacuum/Water building) is allowed if each entrant has their own 5-minute escape pack (or a self-contained breathing apparatus) and a portable oxygen monitor.

3.6. If the liquid nitrogen (LN) supply line inside Building 912 is charged with LN, and this line is not isolated from the 11,000-gallon LN tank, then the installed building oxygen

[1] East Experimental Building Addition
[2] Northeast Experimental Building Addition

monitors in EEBA, NEBA and the LVTF[3] must alarm locally if the oxygen concentration falls below 18% (nominal).

Authorized Alternative: Upon discovery that any installed oxygen monitor in EEBA, NEBA, ERL or the LVTF is out of service, then entry into EEBA or NEBA portions of Building 912 is allowed as long as requirement 3.7 is satisfied.

3.7. If any of the ODH monitors in NEBA, EEBA, ERL, or the LVTF sense oxygen concentration at 18% (nominal) or fail to be able to sense oxygen levels, then the air-operated valve at the 11,000 gallon LN tank located outside B912 must automatically close to isolate the LN supply to B912.

Authorized Alternative: Upon discovery that the automatic isolation valve at the LN tank is inoperable, the entire EEBA, NEBA portion of B912 including LVTFand SVTF[4] blockhouses and ERL accelerator enclosure, must be emptied of personnel as soon as practicable. Subsequent entry will only be allowed if the LN tank manual isolation valve is closed.

[3] The LVTF is not part of the ERL or its support system but it has a feature that can create an ODH in the EEBA portion of B912.

[4] Small Vertical Test Facility which is not part of the ERL or its support system but is located in EEBA and can be affected by an ODH condition in EEBA

Section 4: Calibration, Testing, Maintenance and Inspection that Supports Credited Controls

The calibration, testing, maintenance or inspections needed to support Credited Controls are:

4.1. The Access Control System must be functionally tested in accordance with requirements in the BNL Radiation Control Manual.

4.2. Area radiation monitors must undergo annual calibration (not to exceed 15 months).

4.3. If cryogens are charged in the system, the ventilation exhaust fans and associated oxygen monitors used to mitigate an oxygen deficiency event must undergo annual testing (not to exceed 15 months).

4.3.1. The ability of the air-operated valve at the 11,000 gallon LN tank outside B912 to isolate the LN tank if any ODH monitor in ERL, NEBA, EEBA or LVTF indicates less than 18% (nominal) oxygen concentration, or if any ODH sensor fails, must be functionally checked annually (not to exceed 15 months).

4.4. Radiological shielding and barriers (e.g., shield blocks, fencing, etc.) must undergo visual inspection prior to operations to ensure that they are in place and functional.

Section 5: Administrative Controls

Administrative controls provide defense-in-depth to help ensure the operational integrity of the Credited Controls during operations. These administrative controls are:

5.1. Minimum Prototype ERL Control Room Staffing

5.1.1. Prototype ERL Control Room: one qualified Operator and one other person (i.e., ERL Operator-in-Training or ERL Physicist) must be on duty when Prototype ERL beam is in operation. During beam operations, one of the two people must remain in the Prototype ERL Control Room at all times.

Authorized Alternative: If the extra person (i.e., ERL Operator-in-Training or ERL Physicist) is incapacitated, the qualified Trained Operator may continue operations as long as manning requirements are restored within two hours.

5.2. Prototype ERL Modification and Controls

5.2.1. Approved Configuration Control procedures must be used to ensure review of modifications against Credited Controls in ASE requirements.

5.2.2. Each Prototype ERL experiment or re-configuration of accelerator components, if any, must be reviewed by C-AD for Configuration Control and safety before running with beam.

5.2.3. An experiment or reconfiguration of the accelerator may lie dormant for a period greater than one year and not require a review during the dormancy period. For experiments that may run more than once in a 12-month period, review must occur as determined by C-AD management before each scheduled run.

5.2.4. Modifications to the Prototype ERL that are determined to increase the frequency or consequences of known hazards or which introduce new hazards must be documented using the Unreviewed Safety Issue Determination (USID) process. If a positive USID exists, the modification may not be implemented without DOE approval.

5.3. Beam loss induced radiation within uncontrolled areas for credible repeated losses must be less than 100 mrem in a year. C-AD shall use BNL's environmental TLD monitors to check the effectiveness of the C-AD radiation control program.

5.4. ODH area classification must comply with the requirements in the BNL SBMS Subject Area, ODH Classification/Controls.

Department of Energy
Brookhaven Site Office
P.O. Box 5000
Upton, New York 11973

JUN 26 2012

Mr. George A. Goode
Brookhaven Science Associates, LLC
Brookhaven National Laboratory
Upton, New York 11973

Dear Mr. Goode:

SUBJECT: APPROVAL OF THE PROTOTYPE ENERGY RECOVERY LINAC (ERL) ACCELERATOR SAFETY ENVELOPE (ASE)

Reference: Letter from G. Goode, BSA, to M. Holland, SC-BHSO, Subject: Request for Approval of Prototype ERL ASE, dated June 6, 2012.

The Department of Energy (DOE) Brookhaven Site Office (BHSO) has reviewed your request for approval of the revised ERL ASE, including a review of all associated documents. Based on our review, the revised ERL ASE and the Unreviewed Safety Issue (USI) pertaining to the 11,000 Gallon LN2 tank ODH Hazard are approved.

If you have any questions, please contact Patrick Sullivan, of my staff, at extension 4092.

Sincerely,

M. Holland

Michael D. Holland
Site Manager

cc: R. Desmarais, SC-BHSO
F. Crescenzo, SC-BHSO
P. Sullivan, SC-BHSO
C. Conrad, BSA
S. Kane, BSA
R. Karol, BSA
E. Lessard, BSA
E. Nowak, BSA
T. Roser, BSA
G. Shepherd, BSA
S. Vigdor, BSA

Editors:

Lessard, E.
Karol, R.
Beavis, D.

Contributors:

Ahrens, L.
Alessi, J.
Beavis, D.
Ben-Zvi, I.
Bergh, P.
Bowman, R.
Brennan, J.
Brown, K.
Carlson, C.
Cirnigliaro, P.
Fischer, W.
Glenn, J.
Ingrassia, P.
Karol, R.
Kurczak, S.
Lessard, E.
Makdisi, Y.
Mausner, L.
McIntyre, G.
Passarello, D.
Pendzick, A.
Phillips, D.
Reich, J.
Roser, T.
Sandberg, J.
Schnakenberg, H.
Scott, J.
Snydstrup, L.
Than, Y.
Thieberger, P.
Tuozzolo, J.
Woodhead, A.
Zelenski, A.

1. Chapter One, Introduction

Table of Contents

1. Chapter One, Introduction 1
1.1. Introduction to the C-AD SAD 1
1.2. The C-AD Mission 1
1.3. Slow Extraction (SEB) 4
1.4. Fast Extraction (FEB).....4
1.5. The AGS Switchyard.....5
1.6. The AGS Fast Extraction Beam Lines 5
1.7. X and Y Lines, and the RHIC 5
1.8. Basic Safety, Health, and Environmental Protections at the C-AD 6

List of Figures

Figure 1.2. Annual Collective Equivalent Dose and Annual Proton Production.....4

1.1. Introduction to the C-AD SAD

The Collider-Accelerator Department's (C-AD) Safety Analysis Document (SAD) presents a basic statement of the facility's missions, the health and safety protections that the C-AD affords the public and workers, and the protection of the environment. Chapter 2 contains an overview of the findings and the conclusions of the safety analyses. Chapter 3 describes the characteristics of the environment within which the facility was constructed, and the safety-significant methods used to operate the accelerators. In Chapter 4, the writers documented the analyses, incident scenarios, and Credited Controls used to identify and mitigate potential hazards. Chapter 5 encompasses the policies and bases for the engineered- and administrative-Credited Controls listed in the C-AD's Accelerator Safety Envelopes (ASEs). Chapter 6 describes the quality-assurance program, focusing upon activities that impact protection of the workers, the public, and the environment. Chapter 7 details the approach to facilitating the decommissioning of the accelerators and support facilities. The writers summarized acronyms, abbreviations, and references, with the hyperlinks used throughout the document, in Chapter 8.

The C-AD ESSHQ Web archives related documents, such as the previously approved SADs, ASEs, Accelerator Readiness Reviews (ARRs), Unreviewed Safety Issues (USIs) and USI determinations, the DOE's authorizations to commission and operate, NEPA documentation, and C-AD safety-committee reviews.

1.2. The C-AD Mission

The US Atomic Energy Commission founded Brookhaven National Laboratory (BNL) as a government-owned, contractor-operated nuclear-physics facility in 1947 to provide a center for research in nuclear science in the northeastern United States. From then on to the present, BNL's accelerator facilities have evolved in terms of the types of accelerator, and target, and the type, energy, and intensity of the particles; in concert, the

administering organizations and missions have undergone changes. Today's C-AD oversees 9 accelerators and 8 accelerator facilities that adhere to over one hundred Credited Controls and Credited Control Supports in 6 ASEs. The current missions of the Collider-Accelerator Department are the following:

- To develop, improve, and operate the suite of particle / heavy ion accelerators used to carry out BNL's program of accelerator-based experiments
- To support the experimental program, including the design, construction, and operation of the beam transports to the experiments while supporting the needs for detector development and experimental research
- To design and construct new accelerator facilities to support BNL's and national missions
- To excel in environmental responsibility and safety in all C-AD operations

The C-AD supports an international user community of over 2000 scientists participating in short-term (days) and long-term (years) experiments. The C-AD performs all activities in an environmentally responsible and safe manner under a rigorous Conduct of Operations approach.

The Tandem Van de Graaff (TVDG) facility, commissioned in 1970, houses two TVDG accelerators: they supply low-energy heavy-ion beams for injection to the Booster through a beam-transfer line, or light- and heavy-ion beams for technological- and industrial-applications within local target halls. The TVDG accelerators accelerate atoms via static electricity after removing some of their negatively charged electrons that form a cloud around the nucleus. An atom with a charge imbalance is termed an ion. A partial lack of electrons gives each ion a strong positive charge. The two separate Tandems produce bunches of ions (billions of them per bunch) in a boost of energy, sending them to the Booster accelerator, or directly to experiments in the TVDG's target rooms.

Completed in 1991, the Tandem-to-Booster line (TtB) extended an existing beam line, known as the Heavy Ion Transfer Line (HITL), from the TVDG to the Booster accelerator. The HITL directly injected heavy ions from TVDG into Alternating Gradient Synchrotron (AGS) accelerator from 1986 to 1991. Bunches of ions, leaving the TVDG accelerators at about 5% the speed of light, enter the TtB travelling unimpeded through a vacuum pipe. Magnets installed by the C-AD along the TtB steer the beam bunches into the Booster. Further, the C-AD strips the electrons from the ions' outer shell by passing them through a metallic foil before they enter the Booster.

Some experiments require protons as well as heavy ions. Accordingly, the C-AD supplies negatively charged hydrogen ions to the Booster and BLIP from a 200 million-electron-volt (MeV) Linac built in 1970. C-AD transfers these ions from the Linac transfer line to the Booster through a stripping foil so producing bare protons as they enter the Booster. The Linac supplies protons to the Brookhaven Linac Isotope Producer (BLIP) in Building 931. This facility generates radio-chemicals, sending them to a C-AD accelerator facility at Building 801 for processing into radiopharmaceutical ingredients for sale to drug manufacturers. Before 1991, C-AD sent protons from the Linac into the AGS directly via the High Energy Beam Transport (HEBT) tunnel. The HEBT tunnel remains; however, the C-AD removed the steering magnets and beam pipe that direct the beam to the AGS, and shielded the HEBT-to-AGS interface.

In 1991, the C-AD commissioned the Booster synchrotron, a powerful compact circular accelerator that endows positively charged ions with more energy by having

them "surf ride" on the downhill slopes of radio-frequency electromagnetic waves. The electric field gradient of the RF waves propel ions forward at higher and higher speeds, progressively approaching closer and closer to the speed of light. The Booster also feeds energetic beams into another accelerator, the Alternating Gradient Synchrotron (AGS), and into an experimental area, the NASA Space Radiation Laboratory (NSRL). Typical energies of particles at Booster extraction are 1.5 GeV for protons, 0.1- to 1.1- GeV per nucleon for Fe ions, and up to 0.35 GeV per nucleon for Au ions.

In 2003, the C-AD commissioned the NSRL, a national facility for research into the diverse biological effects of high-proton number, high-energy particles. The NSRL's design supports explorations into a variety of such effects. At the same time, the facility supports research that can answer the basic problems in this field, viz., quantifying the risk to humans in different shielding environments during space flights from exposure to the ionizing particles in galactic cosmic rays. The NSRL is an accelerator facility, consisting of a beam line and target area that extends from the Booster, and encompasses experimental support laboratories for preparing samples.

BNL began the initial design of the AGS in 1953, and commissioned it in 1960. The AGS is the heart of the accelerator complex.

As ions enter the AGS from the Booster, they travel at about 37% the speed of light; the C-AD strips them further making them more positively charged. As they accelerate using the RF energy in the AGS, the ions receive more kinetic energy until they are moving at 99.7% the speed of light.

In 1960, the AGS operated at its full energy of 33 GeV for protons. Originally developed as a proton accelerator, in 1986 the C-AD modified the AGS to accelerate heavy ions. In that same year, the AGS accelerated protons at an intensity of 15 teraprotons (TP) per AGS pulse to energies of 33 GeV. Since 1970, the injection intensity available to the AGS from direct Linac injection has been 150 TP per AGS pulse. The C-AD repeats the AGS pulses over a range of rates, from one every 1.8 seconds to one every 5 seconds. Until 1991, the AGS lacked the ability to capture and accelerate high-intensity protons from the Linac because beam loss, radiation burdens to personnel, and equipment damage prevented its operating at this intensity. Thereafter, the Booster provided additional intensity capabilities to the AGS (100 TP per AGS pulse) so allowing the AGS to achieve energies for heavy ions that permits their extraction at sufficiently high energy and intensity to inject measurable amounts of beam into the Relativistic Heavy Ion Collider (RHIC).

Due to continuous improvements in beam transport and control, routine operation and maintenance of BNL's accelerator facilities continues to reduce radiation exposures to workers despite the increasingly intense accelerated particles. Figure 1.2 plots this continuous dose reduction during the period when the AGS's intensity rose significantly. Records before 1967 are sparse; however, the AGS's intensity was about 0.1 TP. After 2003, the high intensity program at C-AD ceased; the collective dose at the C-AD comes from heavy-ion operations and research operations at Building 801 and the BLIP. After 2003 and through 2010, the collective dose fell to about 1 person-rem each year at the C-AD (see Chapter 4, Figure 4.25.1).

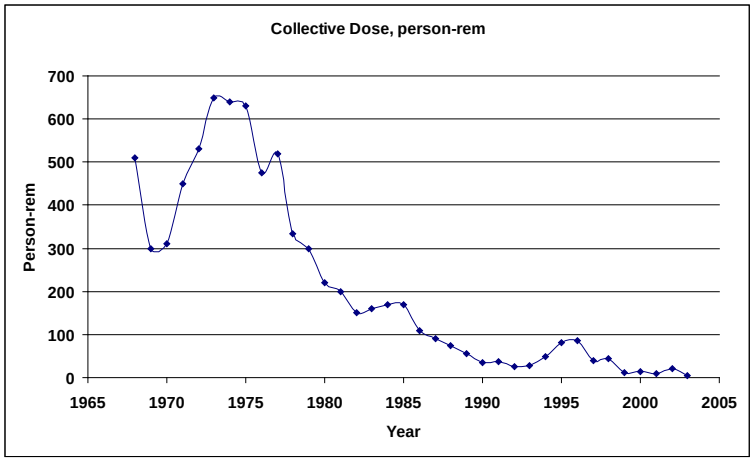

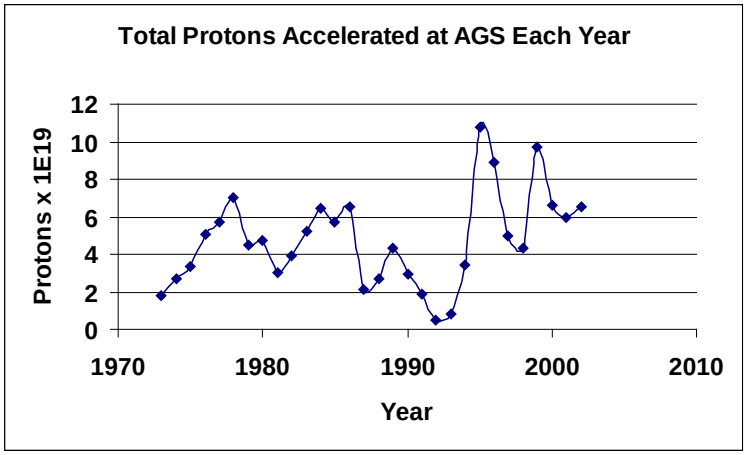

Figure 1.2. Annual Collective Equivalent Dose and Annual Proton Production
(Heavy ion operations began after 2003)

1.3.Slow Extraction (SEB)

The process of creating a slow spill from a synchrotron (Booster and AGS) involves slowly moving the beam orbiting in the accelerator. Back-leg winding bumps on magnets hold the circulating beam near an electrostatic septum, allowing the C-AD slowly to peel (within seconds) the beam out of the accelerator. The C-AD may split the extracted beam into parts while transporting it to target stations, or send it to a single station. Before moving the circulating beam in a synchrotron, the C-AD de-bunches the beam to give it a larger momentum spread.

1.4.Fast Extraction (FEB)

The FEB extraction systems in Booster and AGS perform multiple single-bunch extractions of either heavy-ion beams, proton beams, or polarized-proton beams for the RHIC. The fast beam bunches extracted traverse the AGS-to-RHIC transfer line up to 8 times per AGS cycle. The FEB can extract in each cycle a 50-nanosecond bunched beam up to its full energy and intensity. As an injector for RHIC, the AGS accelerates a variable number of bunches per cycle, such as, three, and transfers individual bunches

one by one into RHIC's waiting RF buckets. In a few minutes, each RHIC ring is filled with up to 111 bunches, one after another. The C-AD circulates beams in the RHIC in periods as short as 30 minutes for low-energy (injection-energy) particle collisions, and in 5- to 10-hours for high-energy particle collisions (500 GeV).

1.5. The AGS Switchyard

1.5.1.1.

The C-AD decommissioned the AGS Switchyard for extracting beams into Building 912 since it no longer contains usable target stations. The C-AD commissioned the Switchyard in 1979. C-AD may use the Switchyard in the future for extraction to either SEB- or FEB-type experiments. Presently, C-AD does not conduct AGS related experiments in this building.

1.6. The AGS Fast Extraction Beam Lines

The fast-extraction beam lines consist of the former V line, which the C-AD commissioned in 1995 and decommissioned in 2004, the U line, which the C-AD commissioned in 1971, and the W line to the RHIC, which C-AD commissioned in 1996. The AGS extracts full-intensity fast bunches to the RHIC and occasionally to the U line via the H-10 extraction system. The U-line targets receive only a few pulses of beam at reduced intensity.

1.7. X and Y Lines, and the RHIC

The C-AD employs the W line to transfer beams to the X and Y lines that lead into the RHIC. The AGS-to-RHIC (AtR) transfer line, commissioned in 1996, contains the U, V, and W beam-lines. After a proton beam or a heavy-ion beam has travelled at top speed in the AGS, the C-AD steers it down the W line toward RHIC. At the end of this line, there is a "fork in the road," where a switching magnet sends the ion bunches down one of two beam lines; the bunches are directed either left to travel clockwise in the RHIC blue ring, or right to travel counter-clockwise in the RHIC yellow ring. The RHIC Project in 1999 commissioned the RHIC rings during an engineering run, and then circulated and accelerated an ion bunch. The RHIC Project ended thereafter, and BNL transferred the RHIC to C-AD in October 1999. The C-AD brought the RHIC from a construction project into the C-AD Conduct of Operations, receiving the DOE's authorization to operate in 2000. To date, C-AD has operated the RHIC in eleven annual running periods from FY00 to FY11, accelerating counter-rotating beams up to 250 GeV for protons, and up to 100 GeV per nucleon for heavy ions. The two counter-rotating beams circulate in the RHIC where they can collide with each other at six interaction regions. Currently, C-AD uses three interaction regions: STAR (Solenoid Tracker at RHIC); PHENIX (Pioneering High Energy Nuclear Interaction eXperiment); and, ANDY (Analyzing Power in Drell-Yan).

Additionally, C-AD installed a polarized-hydrogen-gas target (JET) in the RHIC for elastic-scattering measurements on polarized protons. The C-AD located the JET target at the 12 o'clock intersection point, to separate the two opposing beams by ~10

mm instead of allowing them to collide. Only one beam at a time interacts with the JET target.

1.8. Basic Safety, Health, and Environmental Protections at the C-AD

The DOE classifies the C-AD accelerators and their facilities as low-hazard, subject to the requirements of the DOE Order, DOE O 420.2.B, Safety of Accelerator Facilities, or its successors. BNL folds the DOE's requirements into the Accelerator Safety Subject Area. The DOE's Accelerator Safety Order Guide defines a low-hazard facility as one with potential for no more than minor on-site impacts and negligible off-site ones to people and the environment. The possibility of any off-site impacts or major on-site ones is highly unlikely due to the physical aspects of the C-AD's accelerators and collider rings whereby

- Accelerators depend on external energy sources; that is, electric power that can be easily switched off; the primary hazard, prompt ionizing radiation, is limited to regions where the beam is maintained, and exists only when a beam is present
- Target radioactivity is enclosed in hot cells with filtered ventilation

The C-AD embraced the DOE's Integrated Safety Management System as a basic protection for workers and experimenters. The Laboratory's Standards Based Management System (SBMS) promulgates the requirements of Integrated Safety Management through Subject Areas, such as Accelerator Safety, Working with Chemicals, Engineering Design, Conduct of Operations, Hazard Analyses, Hazardous Waste Management, Lessons Learned, Work Planning and Control, and Stop Work.

To provide excellent science and advanced technology in a safe, environmentally responsible manner, the C-AD continuously reviews the hazards of its operations to identify opportunities for preventing injury and illness. This effort has further formalized the DOE's Integrated Safety Management System under the requirements of the OHSAS 18001 Standard.

The C-AD has the following hazards:

- Ionizing radiation
- Hazardous and/or toxic materials
- Radioactive materials
- Electrical energy
- Explosive gases and liquids
- Oxygen deficiency
- Kinetic energy
- Potential energy
- Thermal energy
- Cryogenic temperatures
- Noise

The C-AD identifies hazards during the planning phase of its operations using the following procedures (or their successors):

- C-A-OPM 2.28, C-A Procedure for Enhanced Work Planning
- C-A-OPM 2.29, C-A Procedure for Enhanced Work Planning for Experimenters
- C-A-OPM 9.1.12, Review of C-A Shielding Design
- C-A-OPM 9.1.15, Guideline for Review Criteria for C-A Experiments

- C-A-OPM 9.2.1, Reviewing Conventional Safety Aspects of an Experiment
- C-A-OPM 9.3.1, Reviewing Conventional Safety Aspects of an Accelerator System
- C-A-OPM 13.6.1.a, Design Review Questionnaire

The Workplace Hazard Analyses and Risk Assessments serve as the technical baseline for identified hazards. The C-AD reviews this document annually to update hazards reviews or as required by a significant change in process.

To guide the operation and maintenance of the accelerators, the C-AD staff undertakes the following:

- Define the scope of work in a Work Permit, maintenance plan, work order, or procedure
- Identify the hazards by performing a pre-job walk down
- For accelerator modifications, obtain the concurrence of the C-AD's Accelerator Systems Safety Review Committee (ASSRC), and the C-AD's Radiation Safety Committee (RSC)
- Establish hazard controls and ensure the staff/visitors required training is up to date
- Provide a pre-job briefing and undertake the work according to plan/permit
- Use feedback processes to identify ways to improve

For experiments, the C-AD's employees and users do the following:

- Determine the concept and scope of the experiment; assess all special requirements, review hazards and safety concerns
- Develop an experimental plan, and identify controls
- For a new experiment or a modification to one, obtain the concurrence of the C-AD Experimental Safety Review Committee (ESRC) and the C-AD Radiation Safety Committee (RSC)
- Approve start-up and perform the experiment according to plan
- Determine ways to improve all facets of the experiment

Workers and users at the C-AD work in or near radiological areas. The rules in 10 CFR 835 establish radiation-protection standards, limits, and program requirements for protecting individuals from ionizing radiation resulting from the conduct of the DOE activities. The C-AD adheres to the requirements in BNL's RadCon Manual. C-AD implements BNL's requirements using the following basic radiation protection systems and programs:

- Access control system for access to accelerator enclosures
- Fixed-location and interlocking area-radiation monitors
- Shielding, posting, and fencing around accelerators and accelerator facilities
- Training and qualifications for radiation workers, users, and visitors
- Personnel monitoring
- Radiation-work permits
- ALARA reviews of activities when triggered
- Periodic radiation surveys using portable radiation-monitors
- Control of radioactive materials and sources

Basic fire protection includes compliance with the DOE's fire-protection guidelines as well as those of NFPA. BNL integrates the C-AD's fire- protection systems with the site-wide system. These systems include automatic fire detection and suppression that may consist of automatic Inergen gas-suppression, fire-wire detection,

smoke detection, fire-rated walls used to separate fire-protection zones, automatic wet-pipe and dry-pipe fire-suppression, and rapid response capability coverage by the BNL Fire Department. The means of egress for occupancies in the accelerators and accelerator facilities accords with NFPA's 101 and NYS's Building Code.

The environmental policy as stated by Brookhaven National Laboratory in the Environmental Stewardship Policy is the foundation on which the C-AD manages significant environmental aspects and impacts. Based on the aspect identification and analysis process in the Subject Area, Identification of Significant Environmental Aspects and Impacts, the following aspects are significant to C-AD activities:

- Regulated industrial waste
- Hazardous waste
- Radioactive waste
- Mixed waste
- Atmospheric discharge
- Liquid effluents
- Storage and use of chemicals or radioactive materials
- Soil activation
- PCBs
- Water consumption
- Power consumption
- Environmental noise

The C-AD uses a formal management program for these aspects, its Environmental Management System (EMS) that complies with ISO 14001. C-AD's basic environmental protections address significant environmental aspects identified by the C-AD's EMS as follows:

- Concrete and iron shields to reduce soil activation and skyshine radiation to As Low As Reasonably Achievable (ALARA)
- Formal design reviews for modifications
- Drawing-configuration control
- Domestic water supply systems equipped with back-flow prevention to isolate them
- Systems to hold-up spilled liquids
- Systems for filtered- and monitored-ventilation
- Waste-handling training and qualifications for staff
- Segregation and lock-down of ordinary waste streams, hazardous-waste streams, and radioactive-waste streams
- Isolation of storm-sewer drain-lines near the accelerators and experimental areas
- Water-impermeable barriers to prevent rainwater from leaching radioactivity from activated soil locations
- Compliance with Suffolk County Article 12 code in designing cooling water systems and piping that contain tritium above the EPA's drinking water standard
- Compliance with 40 CFR 61, subpart H for airborne emissions
- Alarms on water systems to detect leaks and alert operations personnel
- Isolated closed cooling-water systems to reduce the volume of tritiated water

- Process evaluations that describe and detail processes and waste streams, regulatory requirements, waste-minimization activities, pollution-prevention activities, and opportunities for improvement

Management Reviews at the C-AD evaluate annually the management systems for environmental, occupational safety, and health (OSH), and self-assessment to determine whether these systems meet planned performance objectives. These reviews assess each management system's ability to meet the overall needs of the C-AD and its stakeholders, including its workers, users, and the regulatory authorities. The Annual Management Review also determines the need for changes to each such system, including OSH and environmental policy and objectives, and identifies what action is necessary to remedy any deficiencies in a timely manner, including adaptations of other aspects of the C-AD's management structure and performance measurement.

The Management Review encompasses the following aspects:

- The results of environmental spills, airborne releases, work-related injuries, ill health, diseases, and incident investigations
- Performance monitoring and measurement, and audits
- Additional internal- and external-inputs as well as changes, including organizational changes that could affect each management system

In addition to the annual Management Review, the C-AD performs several hundred internal assessments or audits each year. The C-AD posts information on the number of audits and assessments, and information on C-AD ESH Performance each quarter.

2. Chapter Two, Summary/Conclusions

Table of Contents

2.Chapter Two, Summary/Conclusions 1
2.1.Overview of the Results and Conclusions of the Safety Analysis 1
2.2.Summary of Controls, Including Credited Controls 2
2.3.Summary of Conduct of Operations.....3
2.4.Comprehensiveness of the Safety Analyses.....4
2.5.Appropriateness of the Accelerator Safety Envelopes (ASEs) 5

2.1. Overview of the Results and Conclusions of the Safety Analysis

The C-AD's SAD provides safety analyses for the EBIS, Linac, Tandem Van de Graaff, ERL, and RHIC accelerators and for the following accelerator facilities: The BLIP, NSRL, Tandem-to-Booster Line, AGS-to-RHIC Transfer Line, the RHIC's intersecting regions where the C-AD conducts experiments, Building 801's Radionuclide Research and Production Laboratories, and Building 912's experimental areas. The C-AD SAD details the boundaries of the accelerators and their facilities, and meets the requirements elaborated in the SBMS Accelerator Safety subject area that, in turn, conform with the requirements of the DOE Order 420.2C, Safety of Accelerator Facilities, and the DOE's G 420.2-1, Accelerator Facility Safety Implementation Guide.

The C-AD developed the accelerator and accelerator facility's ASEs in accord with the requirements stated in those three documents. The ASEs establish Credited Controls within which the C-AD personnel safely operate, based on the hazards, controls, and risks described in Chapter 4 of the C-AD's SAD; the C-AD identified the bases of these Controls in Chapter 5 of that document. The C-AD's SAD distinguishes several hazards and their controls, as well as the Maximum Credible Incidents (MCIs) based on the safety analyses in Chapter 4.

For natural hazards, a study of the BNL site's geography, seismology, meteorology, hydrology, demography, and adjacent facilities revealed the following:

- The consensus of seismologists is that no significant earthquakes are expected in the near future
- C-AD manages natural phenomena hazards (NPHs), such as high winds, snow/ice, floods, and lightning, by designing buildings conforming to the BCNYS that specifies the design criteria for wind loading, snow loading, lightning protection, and seismic events. Should an NPH cause significant damage, the impact would be mission-related, and would not threaten the public or the environment

The C-AD's safety analyses for the health and safety of workers revealed the following non-standard industrial hazards:

- Excessive beam loss and subsequent radiation exposure outside a shielded enclosure
- Ineffectively shielded enclosure or beam dump, and subsequent radiation exposure
- Access to an interlocked enclosure during the beams' operations, and subsequent radiation exposure
- Loss of the pressure boundary for inert gas, and subsequent exposure to an oxygen-deficient atmosphere

- Loss of negative pressure in hot cells, hot boxes, and radioactive fume-hoods, and subsequent radioactive contamination outside the Buffer- and Contamination- Areas
- Failure of the flammable-gas detection systems resulting in explosive gas concentrations in potentially occupied areas

For assuring the safety of the environment, the C-AD analyses identified the following non-standard industrial hazards:

- Inadvertent activation of soil, and the subsequent loss of tritium to the ground water; the Upper Glacial aquifer is a widely used public- and private-water supply; radioactivity from the accelerator facilities will not impact the offsite environment
- Failure of accelerator's insulating gas-handling systems, and the inadvertent release of SF_6
- Failure of stack monitoring, and a subsequent exposure off-site greater than 10 mrem per year to the Maximally Exposed Individual

2.2. Summary of Controls, Including Credited Controls

The C-AD considers the following to be routine industrial hazards at their facilities that are mitigated by compliance with BNL's SBMS requirements: Material handling, lasers, radiofrequency non-ionizing radiation, magnetic fields, electric shock, arc flash, stored-energy in vacuum spaces, pressures above 15 psig, temperature extremes, fire, hazardous materials, noise, confined spaces, and ozone. The C-AD complies with national- and consensus-standards to protect workers against standard industrial hazards. The C-AD did not analyze incidents in the SAD nor establish additional controls in the ASE for standard industrial hazards unless experience and calculations indicated they could be initiators of a Maximum Credible Incident.

The C-AD identified three non-standard industrial hazards: Large volumes of flammable gas; the potential for oxygen deficiency from helium, nitrogen or other inert gas; and, ionizing radiation from a beam of particles or from radioactivity. The following are the Credited Controls for these non-standard industrial hazards:

- Limits on maximum beam-power for the ion accelerators, and on power sources for the electron guns
- Limits on the maximum beam population and the energy for collider rings
- Limits on the maximum number and energy of particles extracted from the accelerator-injectors, and on maximum number and energy of the primary beam at specific beam-stops
- Access control systems for the accelerator- and collider-enclosures to prevent intrusions and to automatically remove the beam under forced entry
- Operable manually initiated exhaust fans to expel smoke from the RHIC tunnel in the event of a fire during occupancy
- Operational flammable-gas detection systems in the Intersecting Regions (IRs) for STAR and PHENIX during running periods with flammable gases in the experimental detectors
- Engineered systems to minimize the likelihood of injury/illness to personnel from a release of inert gas at the RHIC, the ERL, and the TVDG
- Installed and inspected caps over activated soil shielding to prevent contamination of the groundwater

- Operable ventilation systems for radioactive fume hoods, hot cells, and hot boxes at the RRPL- and BLIP-locations to prevent airborne radioactive materials near workers
- Continuous air monitoring for radioactive airborne emissions from the BLIP stack

In addition to these Credited Controls, the C-AD's Accelerator Safety Envelopes (ASEs) identify over a hundred Credited Control Supports. The C-AD designed the latter to ensure that operators and operations do not continue without the Credited Controls in place. The following are some examples:

- Before starting beam or other radiation-producing operations (e.g., RF testing), the Collider and beam-line enclosures must have all shielding (e.g., berms, and shield blocks) properly in place and configuration controlled, and,
- During RF-only operations, the 4 o'clock portion of the RHIC's ACS must be functional

Finally, several of the ASEs for the C-AD mention a few Authorized Alternatives for specific ASE Credited Controls. The C-AD specified these for use should the C-AD be unable to meet the Credited Control under particular conditions. C-AD pre-assessed and pre-specified all these acceptable Authorized Alternatives in an approved ASE. The prime merits of using an Authorized Alternative is that C-AD reviewed and documented them in the SAD, and the DOE's BHSO approved their usage; they do not decrease the overall level of safety. The following are some examples:

- If less than three ODH fans are operable, or the ODH portion of the RHIC's ACS is out-of-service in a sextant, the C-AD allows entry to that sextant provided that each entrant has their own 5-minute escape pack (or a self-contained breathing apparatus)
- The C-AD's Department Chair, Chief Electrical Engineer, and ESH Coordinator must give written approval allowing personnel in the RHIC tunnel should the Main Magnet's power supply currents necessitate an increase above 530 amperes; work planning must document the controls to minimize the hazard of this situation

The C-AD translates the ASE's requirements into procedures for operators and workers assigned ASE responsibilities. Additionally, the C-AD provides detailed explanatory and cautionary notes in the ASE procedures (e.g., persons entering the RHIC under the Authorized Alternative must wear self-contained breathing apparatus, not just carry it in).

2.3. Summary of Conduct of Operations

The C-AD's organization, administration, and their delineation of responsibilities for safety, health, and environmental protection, assure the safe, efficient operation of the accelerators and experimental areas. The C-AD follows the principles in the DOE O 422.1, for conducting operations. The C-AD centers routine operations and emergency-condition operations in the Main Control Room in Building 911, with its around-the-clock qualified Operators and an Operations Coordinator during operations, and a Maintenance Coordinator during shutdown or maintenance periods. C-AD updates procedures for both routine operations and emergency conditions rigorously; and employs configuration control of procedures. The principles and guidelines implemented under the C-AD's conduct of operations program address the following areas:

- Operations organization and administration
- Shift routines and operating practices

- Control area activities
- Communications
- Control of on-shift training
- Investigation of abnormal events
- Notification of abnormal events
- Control of equipment and systems status
- Lock-out tag-outs
- Independent verifications
- Log keeping
- Operations turnover
- Operations of unique processes
- Required reading to update operations personnel
- Timely orders to operators
- Operations procedures
- Operator aids
- Equipment and piping labeling

The management of the C-AD requires that all inadvertent beam losses occur at levels that are as low as reasonably achievable, while accounting for operational-, economic-, and community-factors. Therefore, several procedures address minimizing beam losses thereby reducing or eliminating unnecessary activation of a beam-line's components, unwarranted airborne radioactive emissions from stacks, and unwarranted radioactive effluents in the sanitary sewer system or groundwater.

Specific procedures are spelled-out to prevent or mitigate accidents and injuries. They include sweep procedures to remove people from beam-enclosures before operations begin, testing procedures for access-control systems, lockout tag-out procedures, design-review procedures, and configuration management procedures. Also specifically covered are soil-cap inspections, experimental safety check-off lists, radiation safety check-off lists, and work planning. To assure that operational decisions acceptably prevent injuries and protect the environment in a coordinated way, the C-AD relies upon multiple approaches; procedures, work planning, conformance to accredited management systems such as OHSAS 18001 and ISO 14001, conduct of operations, extensive training, and several assurance practices.

Based on the safety analyses in the C-AD SAD Chapter 4, the C-AD considers the consequences from all postulated Maximum Credible Incidents would occur very infrequently, such that the risk is acceptable. This outcome partly reflects the use of Credited Controls and their Supports, and partly the formalized Conduct of Operations.

2.4. Comprehensiveness of the Safety Analyses

The safety analyses evaluated all hazardous activities within the C-AD's boundaries, postulating events at associated roads, accelerators and equipment utilizing or supporting the production of accelerated particle beams, and the radioactive material they create. The C-AD based their assessments of non-standard industrial hazards on experience and professional judgment. The term "accelerators and accelerator facilities" was all-encompassing. It included injectors, targets, beam dumps, detectors, experimental

halls, non-contiguous support and analysis facilities, experimental enclosures and experimental apparatus utilizing the accelerator, regardless of where that apparatus was designed, fabricated, or constructed.

The C-AD analyzed and documented all systems, components and activities involving non-standard industrial hazards. The safety analyses document the process to identify the hazards of a given operation by describing, and analyzing the adequacy of measures taken to eliminate, control, or mitigate the hazards. Furthermore, the risks of normal operation are explained, and potential accidents and their associated risks identified and analyzed.

2.5. Appropriateness of the Accelerator Safety Envelopes (ASEs)

The C-AD considers their Credited Controls essential to safety; that is, Credited Controls deemed through analyses to be vital for the safety of operations directly related to protecting personnel and the environment from non-standard industrial hazards. The C-AD documented the Credited Controls in the C-AD ASEs, and detailed the requirements needed to support them, such as operability, testing, and surveillance in the C-AD ASEs. The following are the links to the SAD ASEs:

- ASE for AGS, Booster, Linac and EBIS
- ASE for BLIP and RRPL
- ASE for ERL
- ASE for NSRL
- ASE for RHIC
- ASE for TVDG and TTB

To set the Credited Controls, the C-AD identified the hazards at each accelerator and accelerator facility, and ascertained whether there was a need for further analysis. The C-AD identified the MCIs caused by the identified hazards, establishing their consequences and risks. From these data, the C-AD defined the Credited Controls that lower risk to acceptable levels.

The C-AD's ASEs formally establish Credited Controls and the limits on operations within which the accelerators and accelerator facilities operate. These ASEs ensure that the Credited Controls are in place. The ASEs, and their implementing procedures, ensure that the C-AD affords additional quality control, design margins, and operational attention to these essential controls.

C-AD ASEs address the DOE-approved requirements and require operators to adhere to them. The ASEs are part of the authorization bases for commissioning and routinely operating the accelerators. Following BNL's Accelerator Safety Subject Area requirements, the C-AD submits the ASEs to the Laboratory's ESH Committee for review, and recommendation for approval. BNL's senior managers also review them and request approval from the DOE's Brookhaven Site Office (BHSO), who, in turn approve the ASEs and all changes to them.

3. Chapter Three, Site, Facilities and Operations Description

Table of Contents

3. Chapter Three, Site, Facilities and Operations Description....1
3.1. Characterization of the Site....5
3.2. Characterization of Accelerator Facilities and Operations....9
3.3. Facility Characteristics and Design Criteria....10
3.3.1. General Safety Characteristics and Design Criteria....10
3.3.2. Characteristics of Sources, Pre-Injectors, Accelerators, Experiments....12
3.3.2.1. H^- High-Intensity Source....12
3.3.2.2. Optically Pumped Polarized Proton Source (OPPIS)....13
3.3.2.3. Electron Beam Ion Source (EBIS)....15
3.3.2.4. 200-MeV Linac....19
3.3.2.5. Tandem Van de Graaffs (TVDG)....21
3.3.2.6. Booster....24
3.3.2.7. Alternating Gradient Synchrotron (AGS)....27
3.3.2.8. U-Line and Retired V-Line....38
3.3.2.9. AGS to RHIC Transfer Line (AtR)....42
3.3.2.10. Collider....44
3.3.2.11. PHENIX....57
3.3.2.12. STAR....59
3.3.2.13. ANDY....61
3.3.3. NASA Space Radiation Laboratory (NSRL)....62
3.3.4. Prototype Energy Recover Linac (ERL)....68
3.3.5. Accelerator R&D Facility in Building 912....75
3.3.5.1. Gatling Gun Test Area in Building 912....79
3.3.5.2. The R&D Cathode Development Lab in Building 966....80
3.3.6. Brookhaven Linac Isotope Producer (BLIP)....81
3.3.7. Radionuclide Research Processing Laboratory (RRPL)....88
3.3.8. F&O Facilities and Accelerator Facilities....97
3.3.8.1. F&O Facilities and the Built Environment....97
3.3.8.2. Accelerator Facilities and the Research Space Environment....98
3.4. Standard Industrial Hazards as Initiators of Significant Incidents....99
3.5. List of Controls that Prevent Pollution....102
3.6. C-AD Organization....103
3.6.1. Conduct of Operations for C-AD....104
3.6.2. Conduct of Operations for Non-RHIC Accelerator Facilities....107
3.6.3. Operation Authority in the C-AD Management Line....107
3.6.4. Administration and Organization of ESSHQ....107
3.6.5. BNL's Operations Council....111
3.6.6. Third-Party Certification Programs....112
3.6.7. Calibration, Inspection, Testing Frequencies for Credited Controls....112
3.6.8. Minimum Administrative Controls for Safe Operations....113
3.6.9. Critical Operations Procedures....113
3.7. Experiment Safety Review....114

3.8. Accelerator Safety Review 114
3.9. Radiation Safety Review.....115
3.9.1. Radiation-Shielding Review 115
3.10. Configuration Management 116
3.10.1. Configuration Management - Critical Procedures 117
3.10.2. Configuration Management – Shielding, Access-Control Systems.....118
3.10.3. Configuration Management - Unreviewed Safety Issue Determinations 118
3.11. Characteristics of Systems Having Significant Safety Functions.....118
3.11.1. Interlock Systems for Accelerator Enclosures.....118
3.11.2. Fire Alarm and Fire Protection Systems.....120
3.11.3. Ionizing-Radiation Shielding.....121
3.11.3.1. Earth Berm and Concrete Shielding.....121
3.11.4. Ionizing-radiation Monitoring System.....124
3.11.5. ODH Alarm and Emergency Ventilation Systems 125
3.11.6. Design Criteria and As-Built Characteristics for Cryogenic Systems.....126
3.11.6.1. General Design Criteria 126
3.11.6.2. As-Built Characteristics for Cryogenic Helium Systems 126
3.11.7. Design Criteria and As-Built Characteristics of TVDG SF_6 System.....128
3.11.8. Design Criteria and As-Built Characteristics of Soil Caps.....130
3.11.9. Design Criteria and As-Built Characteristics of Power Distribution.....132
3.11.9.1. Design Criteria for Power Distribution.....132
3.11.10. Design Criteria for Cooling Systems 133
3.11.11. Design Criteria and As-Built Characteristics of RF Systems 134
3.11.12. Design Criteria and As-Built Characteristics of Vacuum Systems 135
3.11.13. Design Criteria and As-Built Characteristics for Radioactive Materials Storage.....136

Index of Figures and Tables

Figure 3.1 Site Overview 6
Figure 3.3.2.1.a Schematic of the Magnetron Source Put this caption under the figure 13
Figure 3.3.2.1.b Magnetron Source Without (left) and With (right) Front Anode 13
Figure 3.3.2.2.a Polarized Proton System 14
Figure 3.3.2.2.b Layout of OPPIS 15
Figure 3.3.2.3.a Major Components of the EBIS Pre-Injector 16
Figure 3.3.2.3.b EBIS Pre-Injector HEBT Beam Line 18
Figure 3.3.2.3.c Final EBIS Pre-Injector Section into Booster 19
Figure 3.3.2.4.a The 200 MeV Linac Building 20
Figure 3.3.2.4.b Linac Tunnel Enclosure Viewed from Tank 1 21
Figure 3.3.2.5.a Tandem Van de Graaff Accelerator 22
Figure 3.3.2.5.b TVDG Facility Layout 23
Figure 3.3.2.5.c Sketch of Tandem-to-Booster (TtB) Line 24
Figure 3.3.2.6 Drawing of the Booster Components 26
Figure 3.3.2.7.a AGS Magnet Enclosure 27
Figure 3.3.2.7.b AGS Component Drawing 29
Figure 3.3.2.7.c Siemens Power Supply and Rectifier/Transformer Yard 30
Figure 3.3.2.7.d AGS RF Power Supply Building and Transformer Yard 31
Figure 3.3.2.7.e Typical AGS Fan House 32
Figure 3.3.2.7.f AGS Escape Hatch 33
Figure 3.3.2.7.g Typical Section of AGS Ring Shielding After 1991 34
Figure 3.3.2.7.h Westinghouse Motor Generator Set for AGS 35
Figure 3.3.2.7.i AGS Experimental Areas 38
Figure 3.3.2.8.a Photograph of U-line Under Construction, Circa 1970 40
Figure 3.3.2.8.b V-line Area No Longer in Use (Highlighted Area) 41
Figure 3.3.2.8.c V Target Blockhouse 42
Figure 3.3.2.9 AGS to RHIC Transfer Line (AtR) 43
Table 3.3.2.10 Achieved Beam Parameters in RHIC 44
Figure 3.3.2.10.a RHIC Tunnel Enclosure 45
Figure 3.3.2.10.b RHIC Compressor and Refrigerator Layout 47
Figure 3.3.2.10.c Schematic of Piping Carrying Helium to One RHIC Ring 48
Figure 3.3.2.10.d Plan View of Collider Ring and Support Buildings 50
Figure 3.3.2.10.e Typical Cross-Sectional Views of the Collider's Berm Shield 51
Figure 3.3.2.10.f RHIC Beam Abort System for One Ring 52
Figure 3.3.2.10.g RHIC Beam Dump Details 53
Figure3.3.2.10.h Marble Shield at RHIC' Beam Dump 53
Figure 3.3.2.10.i Impermeable Cap on Berm over RHIC Beam Dump 55
Figure 3.3.2.10.j 197.05 MHz RF Cavities in RHIC 56
Figure 3.3.2.11 Magnets and Detectors at PHENIX 58
Figure 3.3.2.12 Magnets and Detectors at STAR 60
Figure 3.3.2.13. RHIC Run 11 Configuration of ANDY 62
Figure 3.3.3.a NSRL Facility off the AGS Booster 63
Figure 3.3.3.c NSRL Facility Target Room and Tunnel 64
Figure 3.3.3.d NSRL Access System to Target Room 65

Table 3.3.3 Beam Ion Species and Energies Used Previously at NSRL 66
Figure 3.3.3.e Elevation View of NSRL Target Room and Beam Dump 67
Figure 3.3.3.f NSRL Labyrinth into Target Room 68
Table 3.3.4 Prototype ERL Parameters.....69
Figure 3.3.4.a Schematic Layout of ERL 70
Figure 3.3.4.b ERL General Layout Inside Building 912.....71
Figure 3.3.4.c Superconducting Linac Cryo Module Assembly for ERL 73
Figure 3.3.5.a Layout of Accelerator R&D Facility in Building 912.....77
Figure 3.3.5.b Detailed Layout of Vertical Test Facility in Building 912.....78
Figure 3.3.5.1 Gatling Gun Test Area in Building 912 79
Figure 3.3.5.2 Photocathode Deposition System (Right Front), and Cathode Transport Cart under Vacuum Backing (Left Back) 81
Figure 3.3.6.a Location of BLIP Facility.....82
Figure 3.3.6.b Linac Beam Line to BLIP and BLIP Target Tank 82
Figure 3.3.6.c BLIP Building 931 Layout 83
Figure 3.3.6.d BLIP Target Cooling Water Tank Cross Section.....84
Figure 3.3.6.e Top of BLIP Tank Cross Section.....85
Figure 3.3.6.f Top of BLIP Tank with Hot Cell 86
Table 3.3.6 BLIP Target List 87
Figure 3.3.7.a RRPL Hot Area Portion of Building 801 90
Figure 3.3.7.b Sketch of Upgraded RRPL Ventilation System 94
Figure 3.6.1 C-AD Shift Operations Organization 106
Figure 3.6.3 Organization and Formal Programs for ESSHQ at C-AD.....110
Figure 3.11.3.1.a Earth Berm and Cap Used for Shielding, Booster Beam Dump.....122
Figure 3.11.3.1.b Earth Berm and Cap Used for Shielding, R Line (NSRL) 122
Figure 3.11.3.1.c Shield Wall Opening at the STAR Experimental Hall 123
Figure 3.11.3.1.d Shield Block Wall Enclosure at the STAR Experimental Hall 124
Figure 3.8.11.a Gunnite Cap Installed Above the VQ-12 Magnet in 12-1999.....131
Figure 3.10.11 Typical Two-Part Cooling-Water System at C-AD 133
Figure 3.11.11 Sweep Routine for Enclosure to Powered RF Cavities at RHIC.....135

3.1.Characterization of the Site

Geographically, the BNL's 5,265-acre site lies near the center of Suffolk County, Long Island, about 60 miles east of New York City. Most principal facilities are located near its center. The developed area is approximately 1,650 acres, consisting of about 500 acres originally developed by the Army, as part of Camp Upton. BNL still uses the developed area for offices and other operational buildings: large, specialized research facilities two-hundred acres; outlying facilities, such as the Sewage Treatment Plant, research agricultural fields, housing, and firebreaks occupy 550 acres; and, roads, parking lots, and connecting areas encompass 400 acres. Wooded areas occupy the balance of the site, approximately 3,600 acres, representing the native pine-barren ecology. Figure 3.1 depicts the general layout of the Collider-Accelerator Department (C-AD). The following roads and site perimeter identify the Department's boundary that is under the purview of the DOE's Order 420.2C, Safety of Accelerator Facilities or its successor document. This encompasses all the buildings, utilities, surrounding land, air, waterways, and roads within the boundary. C-AD excludes within this defined boundary the HFBR- and BGRR-facilities, as specified in their respective DOE-approved Hazard Assessment Documents, and for equipment from both facilities stored in, and moved on grounds and roads. As Figure 3.1 shows, the C-AD accelerator facility boundaries are

- East of Upton Road
- North of Cornell Avenue
- West of Railroad Street to E. Fifth Avenue
- North of E. Fifth Avenue, including the C-AD Shield Block Yard
- The North Boundary of BNL

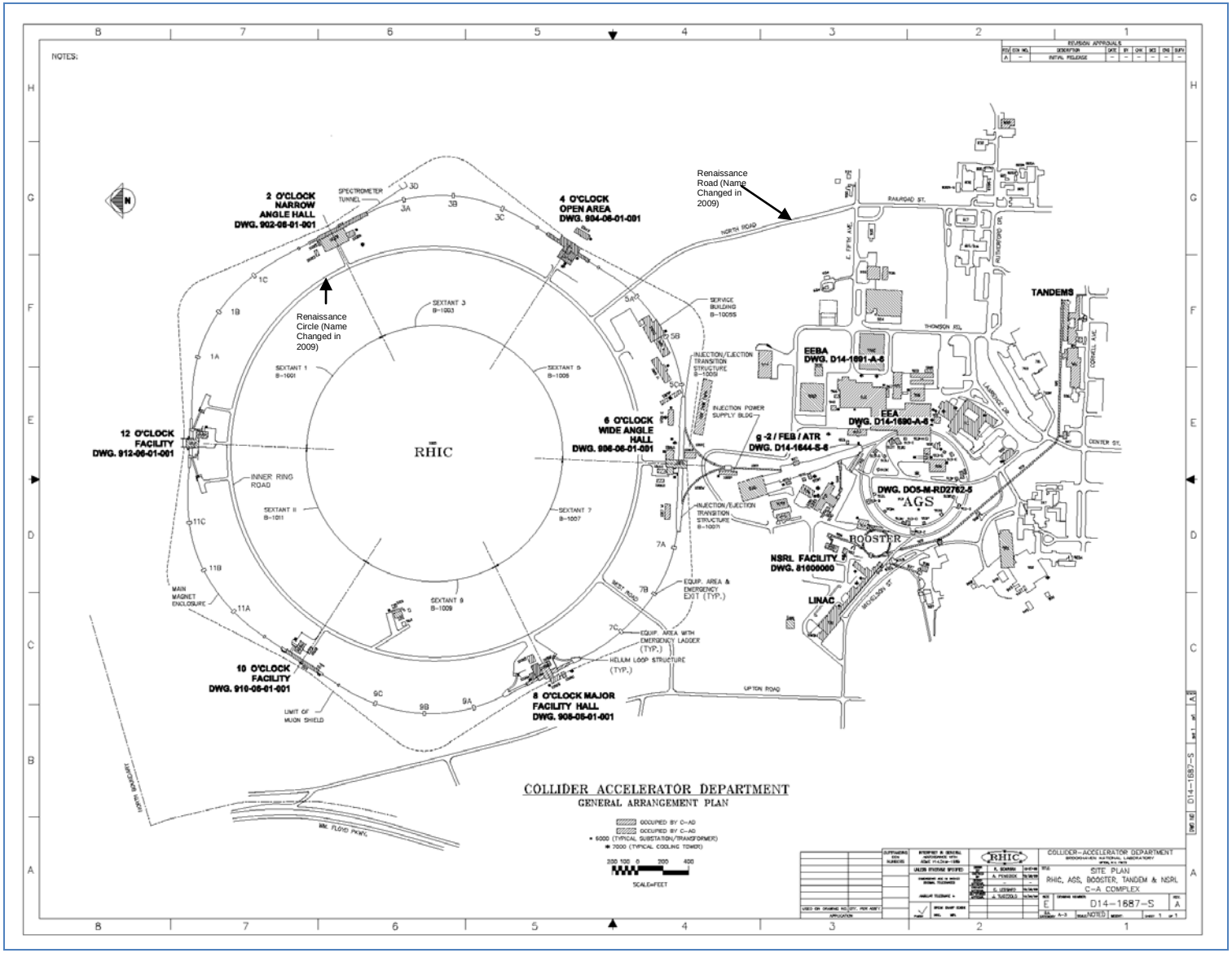

Figure 3.1 Site Overview

Determining the probable occurrence of an earthquake sufficiently intense to damage buildings and structures in the BNL area was part of the planning in constructing the Relativistic Heavy Ion Collider. Seismologists expect no significant earthquakes in the near future, and have not recorded an earthquake with intensity in excess of 8 cm/s^2 (0.01 g) ground-acceleration in the BNL area.[1]

Long Island lies in a Zone 1 seismic probability area; hence, C-AD assumed that an earthquake of Intensity VII could occur, 5.6 on the Richter scale, which causes only negligible damage to well-designed and constructed buildings [2]. Furthermore, the potential for liquefaction of BNL's existing soils is negligible in such an event considering their density and saturation parameters. Thus, C-AD assumes preservation of structural stability throughout an event of this magnitude. Seismologists do not know of any active earthquake-producing faults in the Long Island area.[2]

The C-AD reviewed the DOE's seismic hazard standards (DOE Order 1022-94 and DOE Standard 1023-95) and the Uniform Building Codes for the Long Island region, and developed guidelines for reviewing seismic hazards; C-AD adopted these guidelines in constructing and modifying accelerator facilities and experiments.

The prevailing ground-level winds at BNL are from the southwest during the summer, from the northwest during the winter, and about equally from these two directions during the spring and fall. BNL's Site Environmental Reports contain meteorological data showing the total average annual precipitation, the monthly mean temperatures, and the average surface-temperature increase over the last few decades.[3] In addition to climate change, BNL maintains data on the local population, local economy, the geology, and hydrology. Since information about hydrology contributes to BNL's understanding tritium pollution from an accelerator, the C-AD reproduces some of that information here.

BNL is on the western rim of the shallow Peconic River watershed. The marshy areas in the northern- and eastern-sections of the site are part of the headwaters of the Peconic River. Depending on the height of the water table relative to the base of the riverbed, the Peconic River both recharges to, and receives water from the underlying upper glacial aquifer. During sustained droughts, the river water recharges to the groundwater; with normal to above-normal precipitation, the river receives water from the aquifer.

In general, the terrain of the BNL site is gently rolling, with elevations varying between 44- and 120-feet above mean-sea-level. The depth to groundwater from the land's surface ranges from 1.5 m near the Peconic River to about 27 m in the higher elevations of the central- and western-portions of the site. Studies of Long Island hydrology and geology near the Laboratory indicate that the uppermost Pleistocene deposits, composed of highly permeable glacial sands and gravel, are between 40- and 80-m thick. Water penetrates these deposits readily, and there is little direct runoff into surface streams unless precipitation is intense. The sandy deposits store large quantities of water in the Upper Glacial aquifer. On average, about half of the annual

---

[1] U.S. Department of Energy, Environmental Assessment, Relativistic Heavy Ion Collider at Brookhaven National Laboratory, Upton, New York, DOE/EA# 0508, January 1992.

[2] U.S. Department of Energy, Final Environmental Impact Statement, Proton-Proton Storage Accelerator Facility (ISABELLE), DOE/EIS# 0003, August 1978.

[3] BNL Site Environmental Reports, http://www.bnl.gov/ewms/ser/

precipitation is lost to the atmosphere through evapotranspiration; the other half percolates through the soil, recharging the groundwater.

The Long Island Regional Planning Board and Suffolk County identified the Laboratory site as overlying a deep-flow recharge zone for Long Island's groundwater. Precipitation and surface water that recharge within this zone potentially can replenish the Magothy- and Lloyd-aquifer systems lying below the Upper Glacial aquifer. Up to two-fifths of the recharge from rainfall moves into the deeper aquifers, and the extent to which groundwater on site contributes to deep-flow recharge was confirmed via an extensive network of shallow- and deep-wells installed at BNL and surrounding areas. This groundwater system is the primary source of drinking water for both on- and off-site private and public supply wells; the Environmental Protection Agency designated it a sole-source aquifer system. Accordingly, regulators use Federal drinking-water standards, NYS Drinking Water Standards, and NYS Ambient Water Quality Standards to protect and remediate the groundwater. The Laboratory supplies water to an on-site population of thousands, and must comply with these regulations. In addition, BNL follows the DOE Order 458.1, Radiation Protection of the Public and Environment, for radionuclides not covered by existing federal- or state- regulations.

The BNL groundwater-surveillance program has monitoring wells designed to check C-AD facilities where there is a potential for environmental impact, or areas where previous activities degraded groundwater quality. BNL evaluates the potential impact of radiological- and non-radiological-levels of contamination by comparing analytical results to the NYS- and DOE-reference levels.

The predominant flow of groundwater is to the south-southeast. BNL's closest potable-water supply to the C-AD facilities is supply-well-10 located approximately 700 m to the east. Results from modeling supply-well capture zones indicates that under sustained pumping, it would take approximately 8- to 10-years for groundwater to travel from the closest C-AD facility to supply-well-10. BNL has placed supply-well-10 into low-use since 1999.

Funding from the U.S. Department of Energy drives the demography of the BNL site. Brookhaven National Laboratory is a multi-program scientific center that develops and operates large-scale, state-of-the-art research facilities that are beyond the capability of any single university. In carrying out the DOE's mission, BNL's staff conducts their own basic- and applied-research at the frontiers of science through long-term programs in physics, chemistry, biology, medicine, energy and environmental sciences, and nonproliferation and national security. In addition, Brookhaven's 3,000 scientists, engineers, and support staff collaborate with and/or meet the needs of the more than 4,000 researchers who visit the Laboratory each year from the United States and around the world.

Today, the Laboratory is home to five Nobel Prize-winning discoveries in physics. The Nobel Committee awarded the first Nobel Prize for research at BNL in 1957, for a theory on parity conservation. The physics Nobel Prizes in 1976, 1980, and 1988 were for discoveries made using Brookhaven's Alternating Gradient Synchrotron (AGS), which is part of C-AD. A chemist at Brookhaven National Laboratory won the 2002 Nobel Prize in Physics for detecting solar neutrinos, ghostlike particles produced in the nuclear reactions that power the sun.

The AGS is one of the world's premiere particle accelerators, and together with the AGS-Booster, are the only heavy-ion accelerators for radiation-biology research in the United States.

In addition, the AGS serves as a pre-accelerator for the Laboratory's Relativistic Heavy Ion Collider, which is the world's premier accelerator for nuclear physics research.

Since 1998, Brookhaven Science Associates (BSA), a nonprofit, limited-liability company established in 1997 by Battelle and the Research Foundation of the State University of New York (SUNY) for SUNY at Stony Brook, has operated BNL under contract with the U.S. Department of Energy. BSA's goal is to encourage internationally significant and nationally important science research at Brookhaven, while ensuring the quality of the Long Island environment, the safety of the surrounding community, and the health of the Laboratory's staff and visitors.

Founded in 1977 as the 12th cabinet-level federal department, the U.S. Department of Energy oversees much of the energy-related scientific research in the U.S., through its support of BNL and the eight other national laboratories. The U.S. Department of Energy not only provides most of Brookhaven's research dollars and direction, but also it is the government agency responsible for the Laboratory's operations and environmental stewardship.

3.2.Characterization of Accelerator Facilities and Operations

To characterize accelerators and accelerator facilities, C-AD defines the terms in this document as follows.

The C-AD accelerator facility is the accelerator and its associated roads, plant, and equipment utilizing, or supporting the production of accelerated-particle beams and the radioactive material so created, to which access is controlled to protect peoples' safety and health. It includes injectors, targets, beam dumps, detectors, experimental halls, non-contiguous support- and analysis-facilities, experimental enclosures and experimental apparatus utilizing the accelerator, and the like, regardless of where that apparatus may have been designed, fabricated, or constructed; in sum, it encompasses all systems, components, and activities that are bounded by this SAD.

Accelerator operations are those activities of an accelerator and any associated accelerator facility bounded by this SAD. Accelerator operations and post operations include the production, use, storage and movement of radioactivity, along with its processing and handling.

The C-AD operates several accelerator facilities, the main ones of which are

- Tandem Van de Graaff (TVDG)
- 200 MeV Linear Accelerator (Linac)
- Booster Synchrotron (Booster)
- Alternating Gradient Synchrotron (AGS)
- Relativistic Heavy Ion Collider (RHIC)
- STAR Experiment
- PHENIX Experiment
- NASA Space Radiation Laboratory (NSRL)
- Energy Recovery Linac (ERL)
- Accelerator Research and Development (R&D) Facility
- Brookhaven Linac Isotope Producer (BLIP)
- Target Processing Laboratory (TPL)

C-AD describes these facilities in the following sections, with links to more details in archival documents. In addition to these main facilities, C-AD has included information on several smaller facilities in this SAD (e.g., ANDY experiment at RHIC)

3.3. Facility Characteristics and Design Criteria

3.3.1. General Safety Characteristics and Design Criteria

The general safety characteristics in the bullets below are applicable to all accelerator facilities at the C-AD:

- A formal conduct of operations program using written approved procedures
- Work planning
- Authorizations for all work
- Safety features and safety markings (e.g., pressure relief, UL marks)
- Safety limits for routine operations
- Radiation shielding to control routine- and fault-levels of ionizing radiation
- Magnetic field barriers and warnings to protect workers
- Configuration controls for changes in drawings and equipment
- Formal design reviews
- Formal safety reviews
- Containment of RF radiation within enclosures
- Continuous monitoring and alarms for fire, smoke, ODH, ionizing radiation, and water level
- Sprinklers for fire protection
- Certified hoists, cranes, and rigging equipment
- Certified materials, welding inspections, and welding procedures for pressurized equipment
- Trained and qualified operators for accelerator facility operations
- Trained and qualified technicians for maintenance, installation and repair work
- Trained and qualified engineers for set-up and modification of scientific equipment
- Trained and qualified scientists for accelerator design and development
- Testing and calibration of safety-related equipment and monitors

In addition to using BNL SBMS's Subject Areas, the C-AD's employees use the following requirements documents on general design criteria to assure safety for workers and the public at or near the C-AD's accelerator facilities. Most but not all of these requirements documents, or their successors, directly applicable to C-AD are the following:

- Design Codes
  - National Fire Protection Association (NFPA) 70, ''National Electrical Code'' (2005)
  - NFPA 70E, ''Standard for Electrical Safety in the Workplace'' (2004)
  - American Society of Mechanical Engineers (ASME) Boilers and Pressure Vessel Code, sections II, V, VIII, IX, and X including applicable Code Cases (2004)
  - ASME B31 (ASME Code for Pressure Piping) as follows:
    - B31.3—2002—Process Piping (as applicable to the cryogenic system)
    - B31.9—1996—Building Services Piping (as applicable to the water-cooling system)

- Consensus Safety Standards
  - ANSI Z49.1, ‘‘Safety in Welding, Cutting and Allied Processes,’’ sections 4.3 and E4.3 (1999)
  - American Conference of Governmental Industrial Hygienists, ‘‘Threshold Limit Values for Chemical Substances and Physical Agents and Biological Exposure Indices’’ (2005)
- Federal Regulations
  - 10CFR835, Occupational Radiation Protection
  - 10CFR851, Worker Safety and Health Program
  - 40CFR61, National Emission Standards for Hazardous Air Pollutants (NESHAPS)
- DOE Orders and Standards
  - DOE Order 420.2C, Safety of Accelerator Facilities
  - DOE Order 420.1B, Facility Safety, §§ 4.2 and 4.4
  - DOE Order 414.1D, Quality Assurance
  - DOE Order 422.1, Conduct of Operations
  - DOE 450.2, Integrated Safety Management
  - DOE Order 451.1B, National Environmental Policy Act Compliance Program
  - DOE Order 458.1, Radiation Protection of the Public and the Environment
  - DOE Order 436.1, Departmental Sustainability
  - DOE Order 435.1, Radioactive Waste Management
  - DOE Order 243.1, Records Management Program
  - DOE STD-1020-2002, Natural Phenomena Hazards Design And Evaluation Criteria For Department Of Energy Facilities

The C-AD Radiation Safety Committee (RSC) reviews all C-AD accelerator facility configurations and helps ensure the implementation of the shielding policy as follows:

- Prevent contamination of the ground water
- Limit the annual site-boundary equivalent dose to an individual to less than 5 mrem from each accelerator facility, and less than 25 mrem from all facilities
- Limit the annual on-site equivalent dose to inadvertently exposed people in non-collider-accelerator departmental facilities to less than 25 mrem
- Limit the equivalent dose to any area where access is not controlled to less than 20 mrem during a beam-fault event
- Limit the equivalent dose rate to radiation-workers in continuously occupied locations to ALARA, but in no case exceed an average of 0.5 mrem in one hour, or 20 mrem in one week
- Limit the annual equivalent dose to radiation workers where occupancy is not continuous to ALARA, but, in no case, exceed 1000 mrem without the C-AD Department Chair’s approval

In addition to review and approval, the RSC Chair approves final shield drawings and verifies them by comparing the drawings to the actual configuration. The RSC Chair or his/her designates complete radiation surveys and fault studies after C-AD constructs the shield in order to verify independently the adequacy of its configuration. The C-AD controls the actions and practices of the RSC via the C-AD’s written procedures in C-AD OPM Chapter 9.

3.3.2.Characteristics of Sources, Pre-Injectors, Accelerators, Experiments

The sources include

- H^- High Intensity Source
- Optically Pumped Polarized Proton Source (OPPIS)
- Electron Beam Ion Source (EBIS)

The pre-injectors include

- 200 MeV Linac
- TVDG

The accelerators/collider include

- Booster
- AGS
- RHIC

The experiments include

- STAR
- PHENIX
- ANDY

Additional accelerator facilities include

- NSRL
- Energy Recovery Linac (ERL)
- Accelerator R&D Facility in Building 912
- BLIP
- TPL
- Support facilities, such as motor generators, cooling towers, and transformer yards

The C-AD uses the additional accelerator facilities for fixed targets experiments, preparing or handling the fixed targets, or for accelerator-development experiments.

Additionally, the pre-injectors are accelerators with fixed-target experiments. The Linac injects a proton beam into fixed targets at the BLIP, and the TVDG injects ion beams into fixed targets in the TVDG's target rooms.

3.3.2.1.H^- High-Intensity Source

The C-AD uses a magnetron surface-plasma H^- ion source to produce the high-current H^- beam for BLIP. Figure 3.3.2.1.a and Figure 3.3.2.1.b. show the 7.5 cm x 5 cm x 2.5 cm source. The source's discharge region sits in a magnetic field of 700 Gauss, produced by two small permanent magnets sitting above and below the source. Hydrogen gas is pulsed into the 3 mm gap between the anode and cathode. A very small amount of cesium vapor feeds into the discharge region, where it lowers the work function of the molybdenum cathode. A voltage of 200 V is pulsed onto the source's cathode, while the anode is at the source's platform potential. The discharge between them generates hydrogen plasma. Hydrogen ions from this discharge accelerate by a few hundred volts to the cathode, where they pick up an electron on this low-work-function surface and then re-accelerate away from the cathode, towards the source's anode. A small fraction of these ions passes through a 3-mm diameter aperture in the front side of the

anode. The magnetron source and its power supplies are pulsed to a high voltage of 35 kV that accelerates the H^- ions exiting the anode, so forming the H^- ion beam that injects into an RFQ accelerator. This source produces about 100 mA of H^- ions at 35 keV, and can operate continuously for about 6 months. After 6 months, the cathode is at the end of useful life.

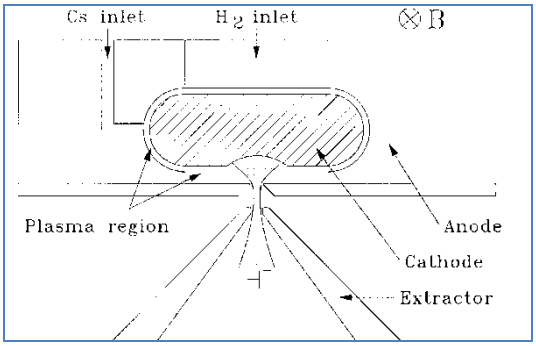

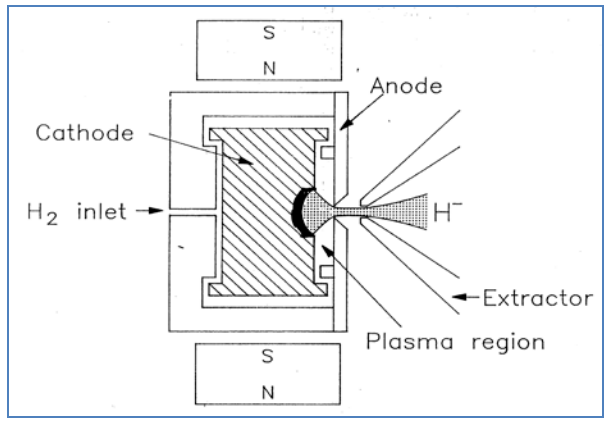

Figure 3.3.2.1.a Schematic of the Magnetron Source Put this caption under the figure

Figure 3.3.2.1.b Magnetron Source Without (left) and With (right) Front Anode

3.3.2.2.Optically Pumped Polarized Proton Source (OPPIS)

Pre-injectors accelerate polarized proton beams that eventually are stored in the RHIC to study spin effects in high-energy proton collisions. The overall system shown in Figure 3.3.2.2.a maintains the polarization and includes the following:

- OPPIS
- Four Siberian-snake magnets and eight spin-rotators in two RHIC rings
- Partial snake magnet in the AGS

- Superconducting strong AGS snake magnet
- Polarimeters and ac dipoles in the AGS and the RHIC

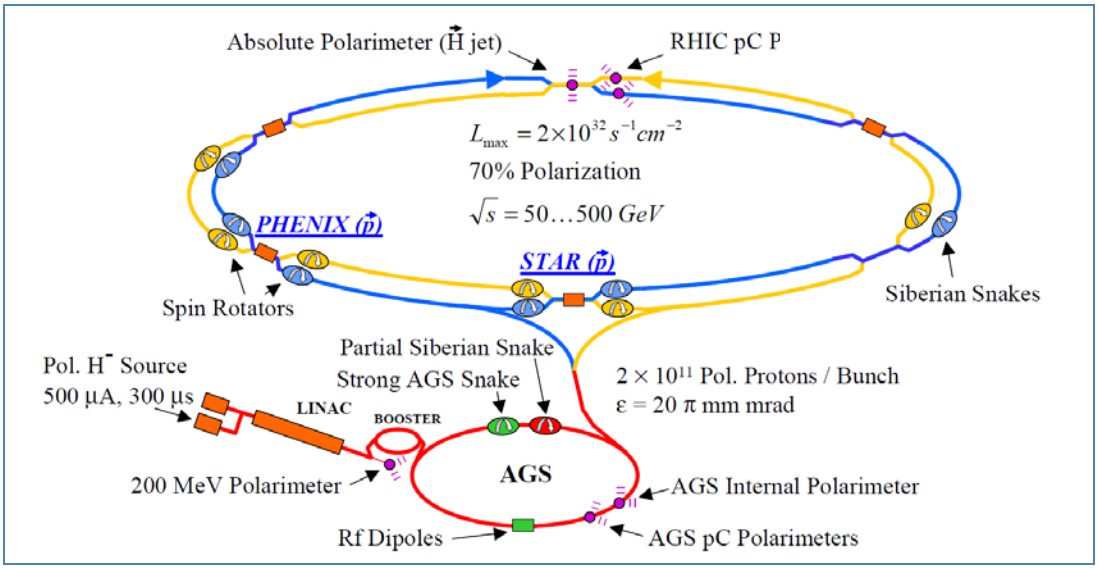

Figure 3.3.2.2.a Polarized Proton System

The OPPIS can generate polarized H^- ions with pulse duration of up to 600 μsec. The OPPIS consists of an electron-cyclotron resonance (ECR) cavity that generates 3 keV H^+ ions, followed by an optically pumped and polarized Rb vapor-cell. The ECR source produces the H^+ beam, and this vapor-cell converts the H^+ ions to electron-spin-polarized H atoms with the polarized electron pick-up. Electrostatic deflection plates sited downstream remove any surviving H^+ or other charged species. The electron-polarized H beam then passes through a magnetic-field reversal region (Sona), wherein the polarization transfers to the H atom's nucleus. Thereafter, a Na-jet vapor-cell donates electrons to the polarized H atoms to form nuclear-polarized H^- ions (Figure 3.3.2.2.b).

The Rb vapor-cell is enclosed in a 2.5 T superconducting solenoid. In its fringe field of about 10 kG lies the ECR cavity, operating with frequencies ranging from 18- to 28-GHz.

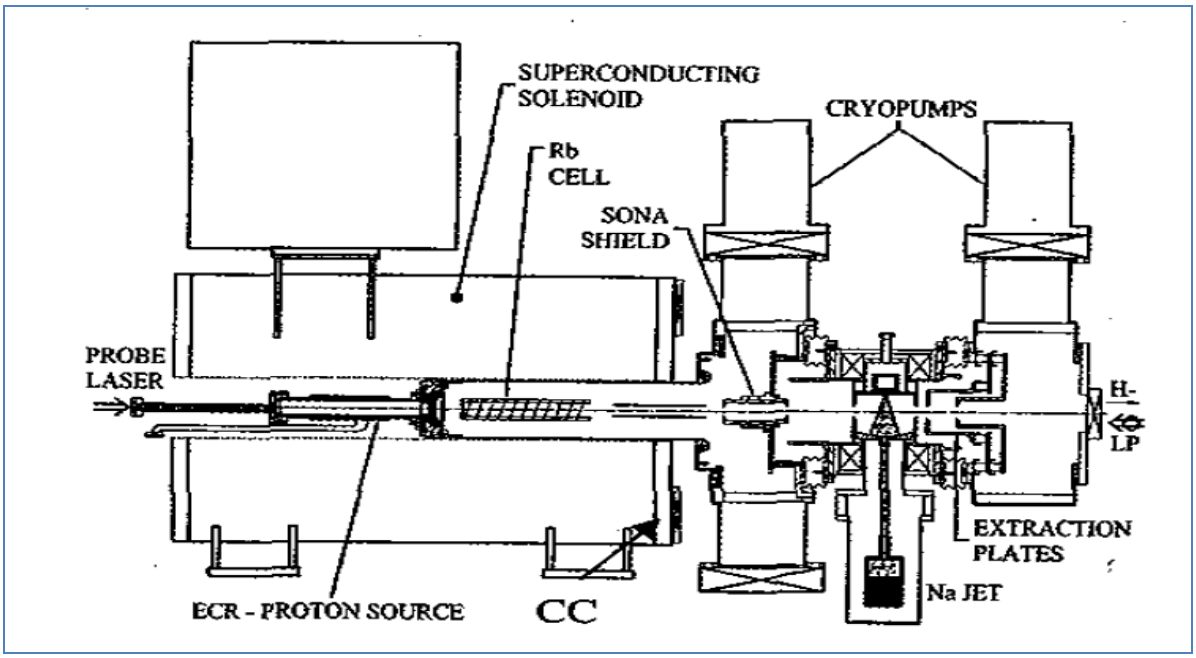

Figure 3.3.2.2.b Layout of OPPIS

The 200-MeV Linac accelerates the polarized H^- ion beam from the OPPIS source that produces 10^{12} polarized protons per pulse with 86- to 90-% polarization. A stripper foil removes the electrons from the Linac-accelerated polarized beam, and the polarized protons enter the Booster. At the end of each Booster acceleration-cycle, the polarized proton beam injects into the AGS at energy of 2.35 GeV, and then accelerates to 24.3 GeV. The polarized proton beam then injects into the RHIC where it accelerates up to 250 GeV, and in the future, up to 300 GeV.

3.3.2.3.Electron Beam Ion Source (EBIS)

The EBIS Pre-Injector that began operation in 2010 is located inside the same building that houses the 200-MeV Linac, and outside the Linac tunnel shielding (Figure 3.1).[4]

In 2008, the C-AD completed the EBIS building-addition to Building 930 to accommodate power supplies and other equipment to support the operation of the EBIS Pre-Injector. More information about structure of the EBIS building is in the archival EBIS USI.

All ions for the RHIC's programs, from deuterium to uranium, start in the EBIS. The following are examples of the ion intensities required at the Booster input:

- Au, 32+: 2.7×10^{9} ions per pulse or 7.6×10^{10} charges per pulse
- D, 1+: 2.5×10^{11} ions per pulse
- Cu, 11+: 1.0×10^{10} ions per pulse or 1.1×10^{11} charges per pulse

Similarly, for NSRL, example intensities required at Booster input are

[4] Archival EBIS Authorization Documents

- C, 5^+: $2x10^{10}$ ions per pulse or $1x10^{11}$ charges per pulse
- O, 8^+: $6.7x10^9$ ions per pulse or $5.3x10^{10}$ charges per pulse
- Si, 13^+: $5x10^9$ ions per pulse or $6.5x10^{10}$ charges per pulse
- Ti, 18^+: $1.3x10^9$ ions per pulse or $2.3x10^{10}$ charges per pulse
- Fe, 20^+: $1.7x10^9$ ions per pulse or $3.4x10^{10}$ charges per pulse

Pulse width is variable between 10- and 40-µs, which allows for few (1-4) turn injections into the Booster. This arrangement simplifies injection into the Booster, and greatly reduces the sensitivity to small beam losses that otherwise could entail a pressure bump, resulting in further beam loss at injection.

At constant 2 MeV per u (1 u =1 atomic mass unit), the beam's energy spread at the exit of the EBIS Pre Injector is ± 20 keV per u for Au^{32+}, which is lowered further by a debuncher to ± 2 keV per u. This value is crucial for keeping the Booster beam's longitudinal emittance small, and hence, minimizing beam loss. The transverse profile of the beam is Gaussian-like. Its pulse repetition rate is 5 Hz, so keeping the RHIC's overall fill times to only a few minutes.

There is a one-second switching time between two ion species at the EBIS Pre-Injector. Presently, there are several operating scenarios for the RHIC and the NSRL, depending, among other things, on whether either is running alone, or the two are running concurrently. To allow operation with the desired flexibility, the EBIS Pre-Injector switches the beam's species and the rigidity of the transport line in one second.

Figure 3.3.2.3.a shows the major structural components installed in the EBIS Pre-Injector area of Building 930.

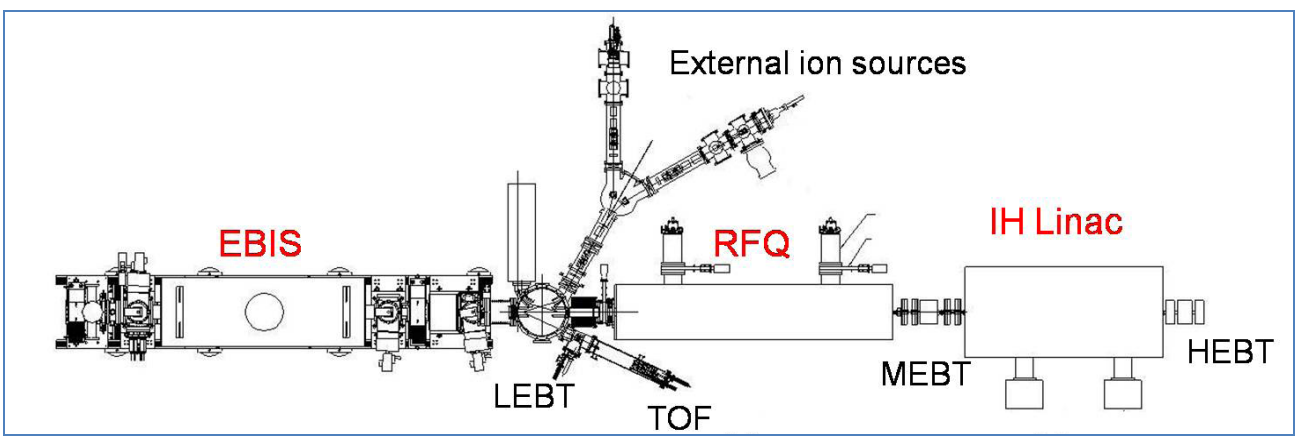

Figure 3.3.2.3.a Major Components of the EBIS Pre-Injector

The Electron Beam Ion Source's 2 m-long superconducting solenoid (EBIS in Figure 3.3.2.3.a) is a major element of EBIS Pre-Injector; its function is to focus the electron beam generated in the electron gun, and to maintain its diameter throughout the 1.5 m long of the ion trap. The solenoid requires minimum maintenance for refilling of cryogens; that is, refills occur only two or three times per year.

The superconducting solenoid for the EBIS has a 5.5 T field, uniform to within ±0.25 % over the 1.5 m length of the trap. BNL's Pressure and Cryogenic Safety Sub-Committee

reviewed the solenoid and its pressure vessel, vacuum vessel, and reliefs. They approved its equivalence to the protections stated in the ASME Pressure Vessel Code for these vessels (see LESHC 09-02 and LESHC 09-09).

The EBIS electron gun generates a 10 A, 20-keV electron beam (approximately 575 A/cm^2) used for the ionization and confinement of the ions in solenoid's trap. The cathode material (Ir-Ce) provides highly dense emission current with a lifetime of several thousand hours.

Drift tubes, installed along the EBIS's axis, control the operation of the ion trap and the propagation of the electron beam. These drift tubes are electrically isolated from the ground and connected to the external power-supplies via electrical feed-throughs in a vacuum jacket. The vacuum chambers form a vacuum envelope around the EBIS with the pressure of residual gas about $1x10^{-10}$ Torr.

The electron collector is designed to handle a nominal electron-beam of 20 A, 15 kV dc, i.e. 300 kW, but since ionization times typically are < 50 ms, the electron beam can be pulsed at a duty factor < 25%, allowing the collector to handle lower average-power.

The Low Energy Beam Transport (LEBT) in Figure 3.3.2.3.a shows where beam lines, vacuum ports, and diagnostic ports converge. At the output of EBIS, the ion beam's energy per unit mass is 17-keV/u. The LEBT is a transitional portion of the EBIS Pre-Injector that transmits and forms the ion beam for injection into the RFQ. In addition, the LEBT is where the ion beams from the external-ion injector enter into the EBIS, where operators make diagnostic measurements of the ion beams, and where operators vacuum pump the electron collector.

External ion-sources seed the EBIS with primary low-charged ions of the selected species. Several different target materials are inside the external ion-source target chamber so that operators can change the ion species on a pulse-by-pulse basis. This external source chamber encompasses the ion optics, a switching station for electronically selecting the desired ion species for ion injection, ion-current monitors, vacuum-system, and power supplies. Low-charge gas phase ions generate from a solid ion-source target material via spark ionization. Once the ions are free to move, electric fields direct them into the LEBT's vacuum chamber (Figure 3.3.2.3.a), and toward the region of the ion trap for further ionization by the electron beam.

Radiofrequency (RF) resonant cavities accelerate the ion beam, or decelerate it for bunching. When radiofrequency radiation enters into these resonant cavities, they produce the appropriate electric fields for each purpose. These RF devices include the Radio Frequency Quadrupole (RFQ), the Linac, and the buncher cavities.

The Radio Frequency Quadrupole (RFQ) is a resonant structure in which four approximately 1-m long, continuous vanes or rods, machined with precise modulations and configured in a quadrupole geometry, bunch, focus, and accelerate the injected ion beam. This type of structure affords efficient RF acceleration at the low energies the ion beams have when initially extracted from the EBIS. The RFQ accepts highly charged ions from the EBIS with energy of 17 keV/u and ion currents of up to 10 mA. The RF operational frequency is 100.625 MHz. The beam's energy per atomic-mass unit is 300 keV per amu at the output of the RFQ.

The IH Linac operates with a beam current of up to 10 mA. This resonant structure generates time-dependent axial electric fields to accelerate ions. Reversing the direction of the RF field direction shields the ion bunches from the decelerating fields by internal drift tubes. An "Interdigital H-mode" design operating at 101.28 MHz is used. The beam's energy per unit mass

is 2 MeV/u at the output. The walls of the cavity are approximately 5 cm thick to reduce x-ray levels outside the IH Linac.

There are three spiral resonator cavities for the EBIS Pre-Injector. A 20 cm long 4-gap debuncher cavity sits between the RFQ and IH Linac; it is an Al cavity since it is very low power and low duty-factor. In the High Energy Beam (HEBT) line (Figure 3.3.2.3.b), there is a 4-gap debuncher cavity approximately 12 m from the end of the IH Linac, and a 2-gap debuncher approximately 26 m from the end of the IH Linac, both reducing the energy spread of the beam going into the Booster. That Figure also shows the quadrupole magnets (Q) used to focus the beam, and a current transformer (CT) that measures the ion current.

A debuncher is a radio-frequency cavity phased so that particles at the leading edge of a bunch of beam particles (higher momentum particles) are decelerated, while the trailing particles are accelerated, thereby reducing the beam's range of momenta and energy spread. C-AD sited the debuncher between two stages of acceleration to increase the efficiency of capturing the beam in the second stage.

The RF amplifiers for the RFQ and the IH Linac were manufactured to combine power from two 175 kW amplifiers that, at their final stage, use a TH535 tetrode to produce a 350 kW peak power at 100.625 MHz. The RF amplifier's equipment and controls are located on the second level of the EBIS building addition to Building 930.

The HEBT line transports the beam from the IH Linac to Booster injection. There is a 17 m transport section after the IH Linac in Building 930. The beam line passes through an 8 m-thick shield wall before proceeding into the Booster tunnel. Inside the Booster, a 12-m transport line with two dipoles bends the beam for injection into the Booster, at the same location as beam coming from the Van de Graaffs. Figure 3.3.2.3.c shows the final section of EBIS Pre-Injector HEBT.

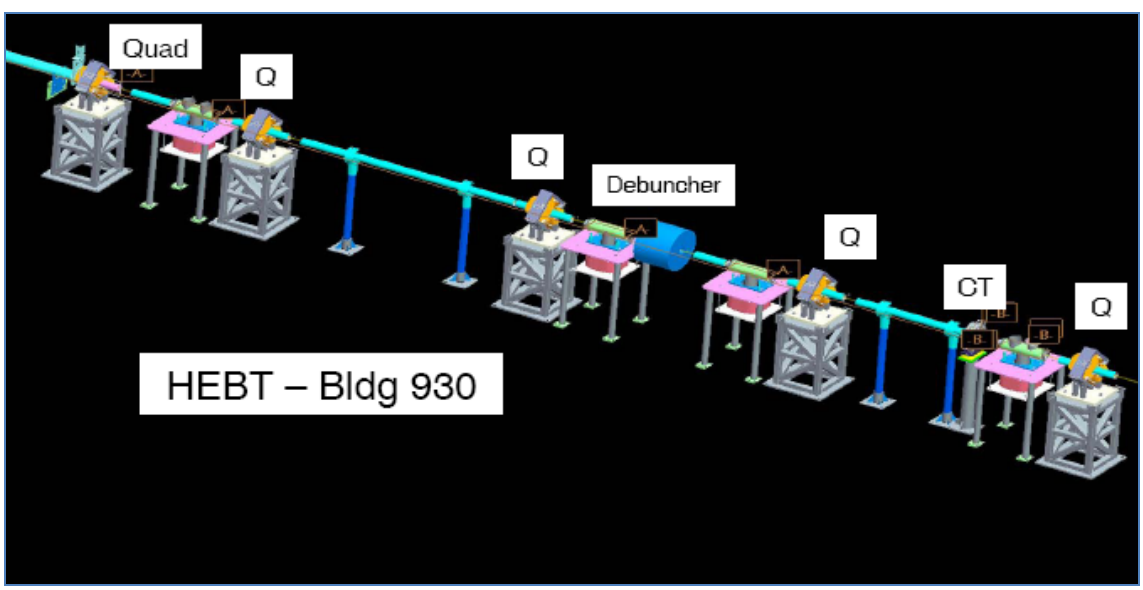

Figure 3.3.2.3.b EBIS Pre-Injector HEBT Beam Line

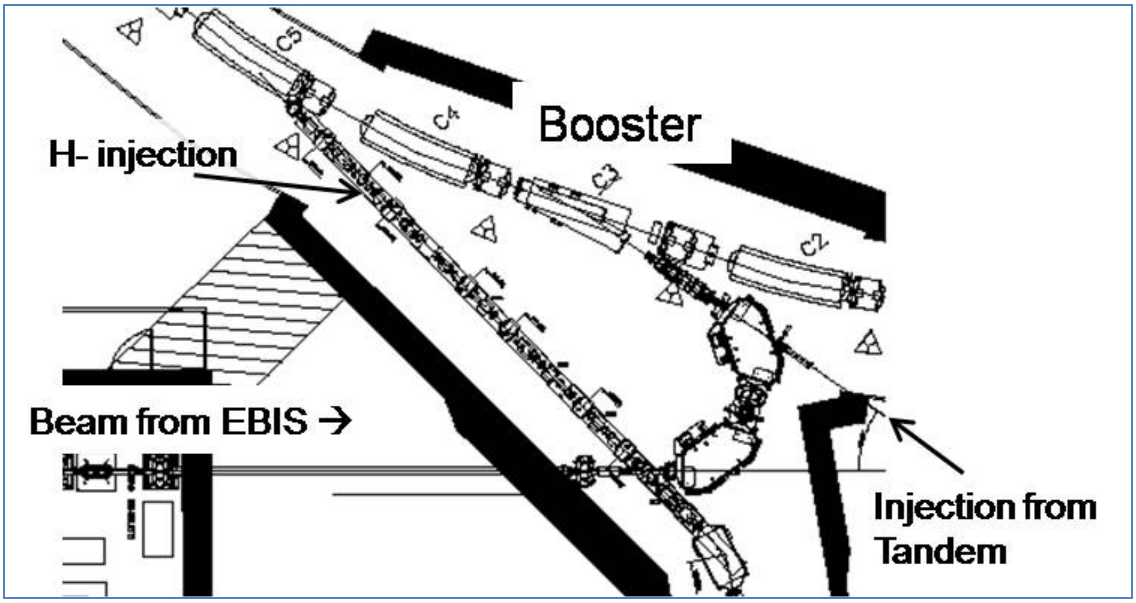

Figure 3.3.2.3.c Final EBIS Pre-Injector Section into Booster

Inside the Booster, are two identical laminated dipoles that accomplish the required one-second field-changes. The magnets each have a bend angle of 72.5 degrees, a 13.5 cm gap, a 1.3 m bend radius and a 1.0 T maximum field.

3.3.2.4. 200-MeV Linac

In the late 1960s, the 200-MeV Linac replaced a 50-MeV Linac used to inject protons into the AGS.[5] Building 914 that accommodated this former Linac now is housing a portion of the Booster. The 200-MeV Linac's purpose is to provide accelerated protons; its basic components include a high-intensity H^- ion source and the OPPIS, a radiofrequency quadrupole pre-injector, and nine RF cavities spanning the length of a 150 m tunnel.

The original design of the 200 MeV Linac building (Figure 3.3.2.4.a) balanced space requirements, radiation shielding, proximity of components, ease of construction, and cost. The original design of the pre-injector building at the start of Linac focused on two vaults, each 14 m long, 9 m wide, and 11 m high. The radiation shielding around the vaults consisted of 0.4 m of normal concrete. C-AD no longer uses these vaults for pre-injectors; rather, they contain spare parts for the Linac.

The Linac enclosure (Figure 3.3.2.4.b), which accelerates beams such that a Radiation Area might exist, is 140 m long, 4 m wide, and 5 m high. This enclosure is reinforced concrete, and additional radiation shielding consists of 1- to 4-m of earth that forms the outdoor region over the tunnel. The beam line itself is at least 1 m below grade at its shallowest. There is side shielding at elevations above grade. At its narrowest, the side shield is 4 m of earth and 0.5 m of concrete between the tunnel and the equipment bay. From the end of the Linac, a 3 m by 3 m

[5] Archival AGS and Linac Safety Analysis Report

tunnel extends 95 m to connect directly with the AGS; however, C-AD no longer uses it to inject the beam directly into the AGS. An additional Linac spur tunnel 4 m wide, 3 m high and 17 m long leads to the Brookhaven Linac Isotopes Producer (BLIP) facility that still operates using Linac beams. The spur tunnel also leads to the former Chemistry Linac Isotopes Facility (CLIF), the former Radiation Effects Facility (REF), and the former Neutral Beam Test Facility (NBTF), and are no longer in use. Another short tunnel, about 17 m long, brings the Linac beam into the Booster, and C-AD uses that beam for the RHIC- and NSRL-programs.

Although the high intensity H^- source is designed for generating a 50 mA beam, the 200 MeV Linac currently produces a beam of about 40 mA with a 0.5 ms pulse length, at a repetition rate of 6.667 Hz. BLIP uses these high-intensity pulses to produce radioactive ingredients for later manufacture into radiopharmaceuticals. The OPPIS source produces 10^{12} polarized protons per pulse that the C-AD employs in the RHIC and NSRL programs.

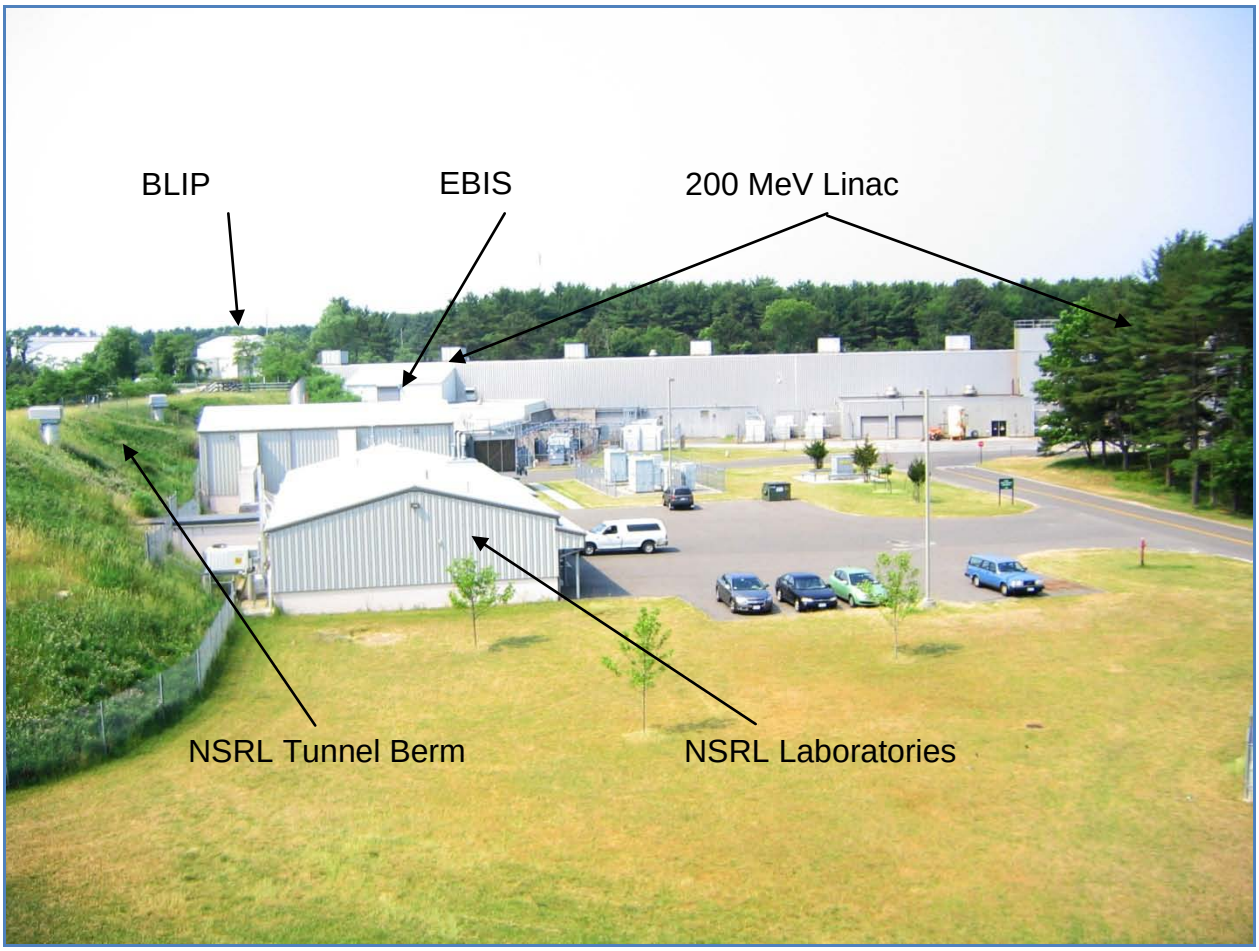

Figure 3.3.2.4.a The 200 MeV Linac Building

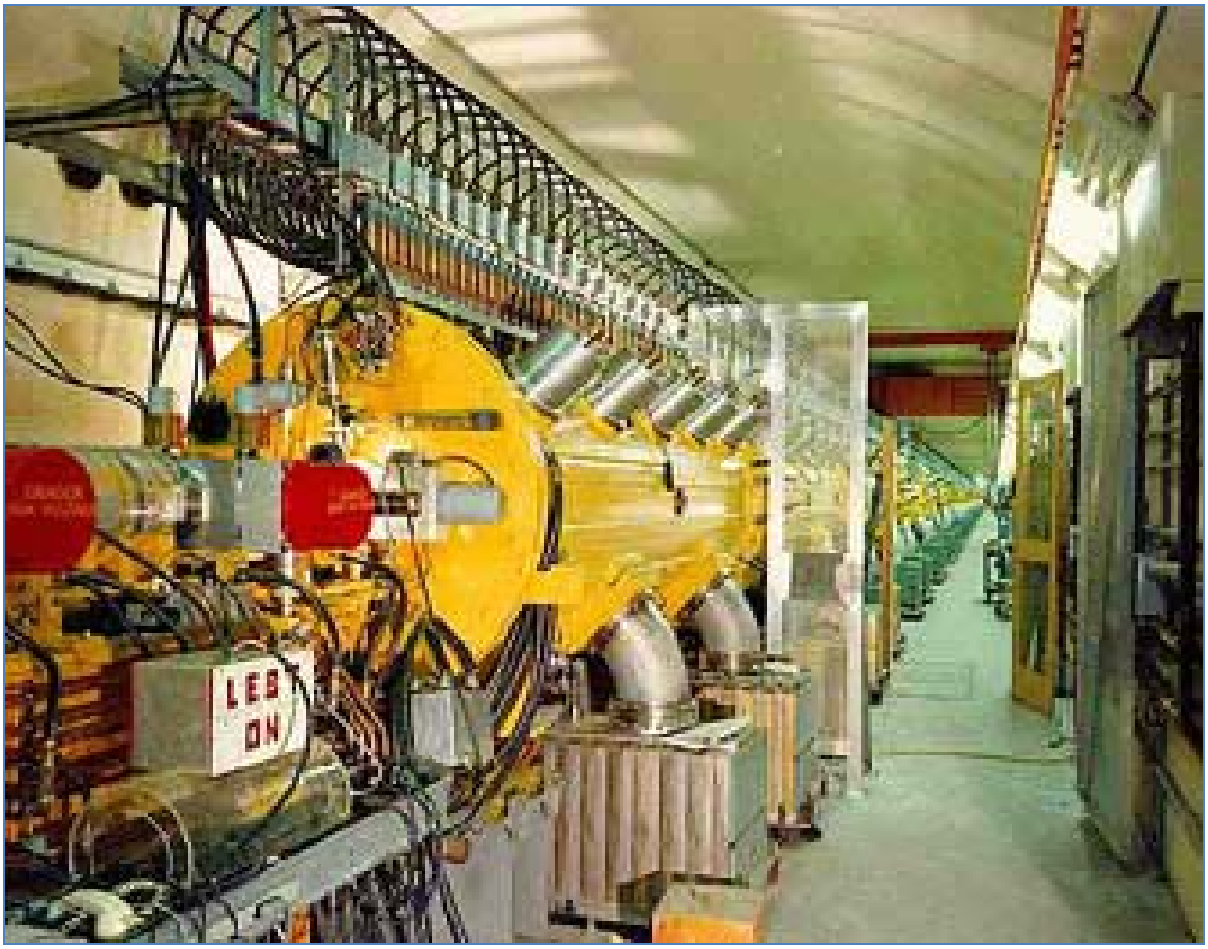

Figure 3.3.2.4.b Linac Tunnel Enclosure Viewed from Tank 1

3.3.2.5.Tandem Van de Graaffs (TVDG)

Completed in 1970, the TVDG pre-injector facility for many years was the world's largest electrostatic accelerator facility.[6] It provides researchers with beams of more than 40 different types of ions, ranging from hydrogen to uranium, stripped of their electrons. The facility consists of two 15 MeV accelerators, each about 25 m long, aligned end-to-end (Figure 3.3.2.5.a).

[6] Archival Tandem Van de Graaff Safety Assessment Document

Figure 3.3.2.5.a Tandem Van de Graaff Accelerator

The Radiation Effects Testing and Calibration facility at the TVDG is available for studying the effects of space radiation, in particular, Single Event Upset (SEU) Testing, and Spacecraft Instrument Calibration. The ion energies may range from 29 MeV protons to 385 MeV uranium ions. Ion irradiation and implantation also are available for other ion-beam related applications. The TVDG started heavy-ion research for nuclear physics in 1970, and, since 1986, at least one of the accelerators served as the heavy ion injector for the Booster or AGS. In 1999, the TVDG supplied heavy ions for RHIC. Since 2003, the TVDG supplied heavy ion beams to NSRL. At the NSRL, radiobiology research focuses on investigating the effects of exposure to

space radiation on humans, and particularly is important for planning of future long-term flights in deep space. In 2011, the C-AD will support the last TVDG run to supply beams of heavy ions to either the RHIC or NSRL. In 2012, the EBIS will fulfill that role. Figure 3.3.2.5.b shows the layout of the TVDG facilities. In the near future, TVDG may supply low-energy ions for NASA radiobiology experiments with cells in Target Room D, E or F.

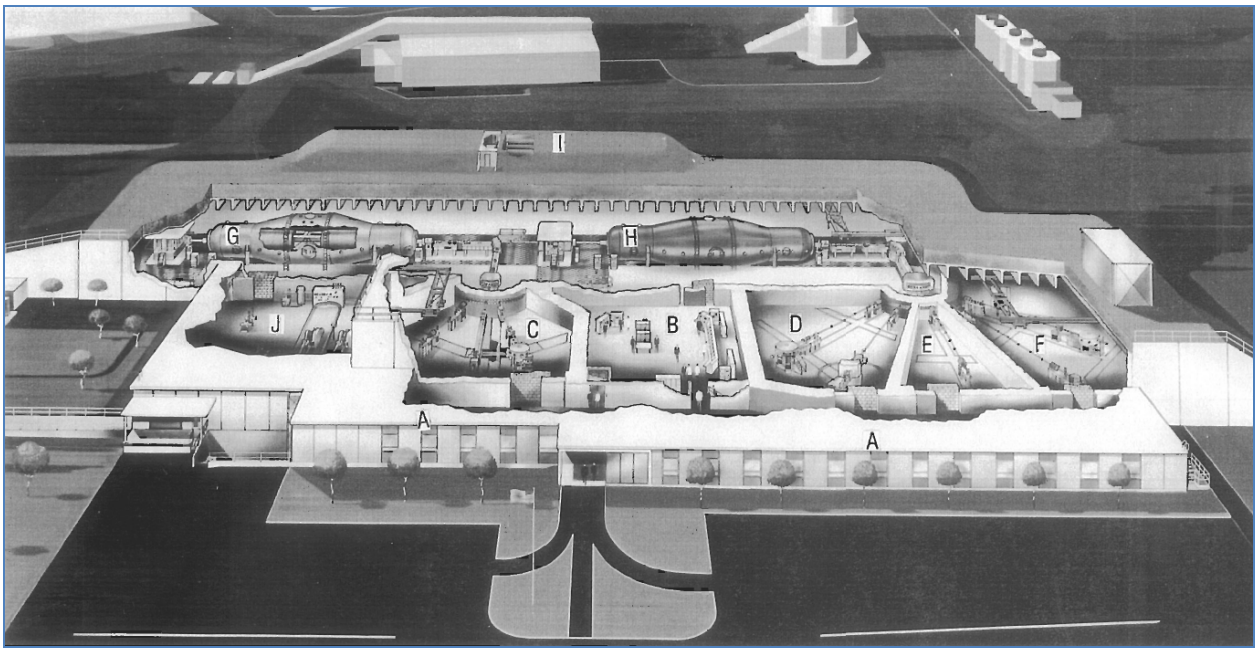

Figure 3.3.2.5.b TVDG Facility Layout
Offices/Labs (A), Control Room (B), Target Rooms (C, D, E, F), Accelerators (G, H), Insulating Gas Storage (I), and, Mechanical Equipment Room (J)

A 900 m tunnel[7] and beam transport system, called the Tandem to Booster (TtB) Line that was completed in 1991, allows the delivery of heavy ions from the TVDG to the Booster for further acceleration; this is an extension of the former Heavy Ion Transfer Line (HITL) that supported the direct injection of heavy ions from TVDG into the AGS. That transport system no longer exists; however, the spur tunnel leading directly to AGS still is present. The TtB tunnel extends the range of ions available from the Tandem to the Booster because the Booster's excellent vacuum levels allow the acceleration to intermediate energies of partially stripped ions heavier than sulfur. This invaluable feature ultimately allows heavy ions of all species to inject into RHIC in order to study the physics of colliding beams. Figure 3.3.2.5.c shows the TtB tunnel; however, after the EBIS Pre-Injector becomes operational in 2012, the use of TtB for routine transport of heavy ions to RHIC and NSRL will end.

[7] Archival Tandem to Booster Safety Analysis Report

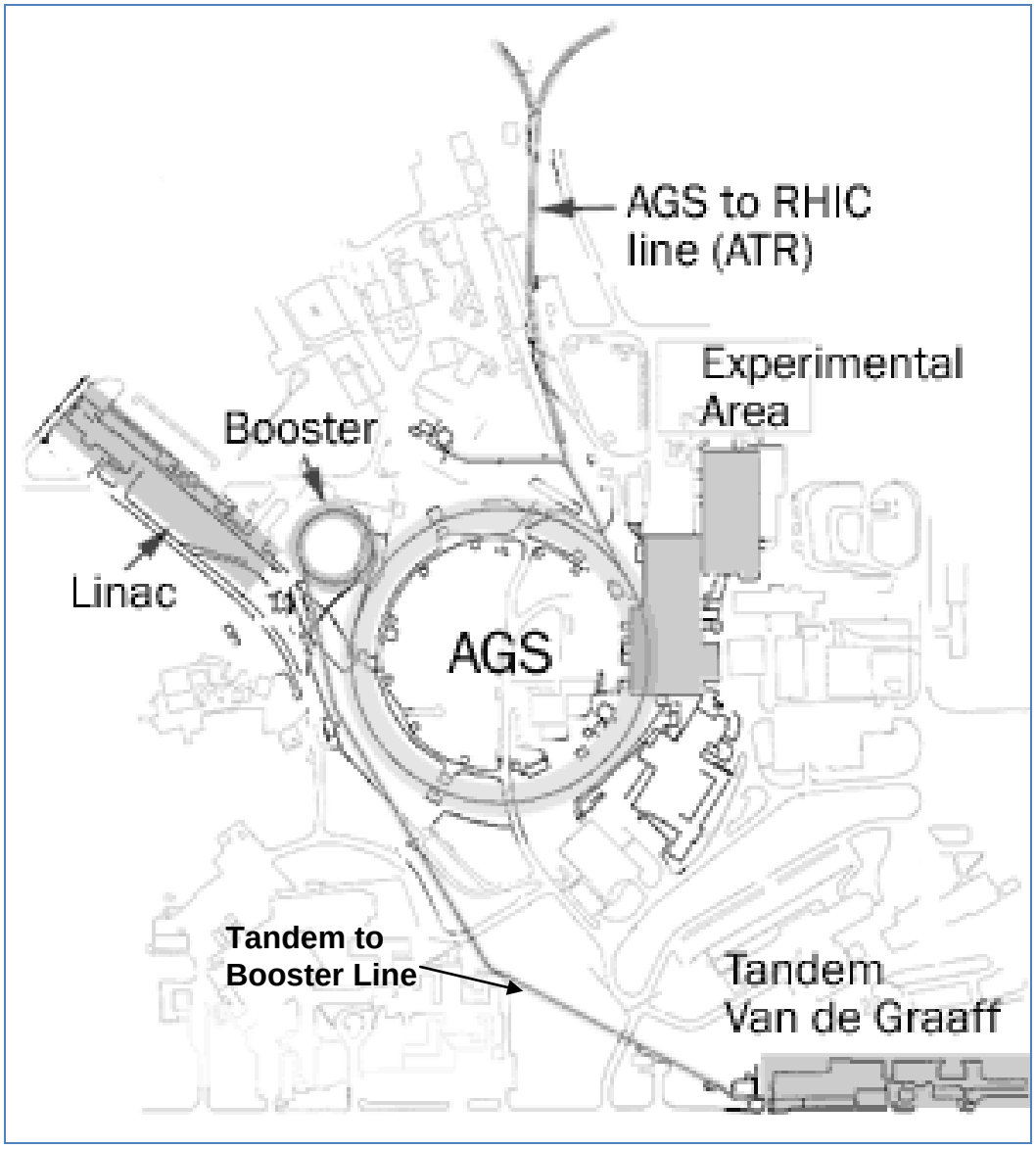

Figure 3.3.2.5.c Sketch of Tandem-to-Booster (TtB) Line

3.3.2.6.Booster

After construction finished in 1991, the Booster became an accelerator-injector for the AGS and since 2003, an accelerator for the NSRL.[8] The Booster is a circular accelerator with a circumference of 200 m, one fourth of the AGS, and it is located at the north corner of the AGS near the 200-MeV Linac. The Booster pre-accelerates particles before injecting them into the AGS, increasing the intensity of the particle beams accelerated by the AGS. Figure 3.3.2.6 is a

[8] Archival Booster Safety Analysis Report

drawing of the Booster with its accelerator components. The Booster receives proton beams from the Linac (item 31 on Figure 3.3.2.6) and heavy ion beams from the TVDG (item 33), or from the EBIS Pre-Injector (Figure 3.3.2.3.c). The Booster injects high-energy beams through a fast extraction port and beam transport line into the AGS (item 32 on Figure 3.2.2.6), and also injects high-energy beams into NSRL through a slow extraction port and beam transport line (item 34). The Booster increases the proton- and polarized-proton-flux in the AGS by a factor of four to six over that attainable by direct injection from the Linac. Additionally, it supports the injection of ions of higher mass into the AGS, a key feature leading to the successful operation of the RHIC and the NSRL.

Routine high-intensity proton operations no longer are required; however, at maximum, protons may accelerate in the Booster at a flux of $6x10^{13}$ per second, i.e., $l.5x10^{13}$ protons per pulse at 4 Hz, to energy of about 1.5 GeV. The C-AD can increase pulse frequency to 7.5 Hz, and raise the proton energy to about 2.1 GeV; the potential flux available to inject to AGS can be $1x10^{14}$ protons per second.

The Booster receives one pulse of heavy ions from the TVDG that it accelerates to energies between 0.3- and 1-GeV per nucleon with an acceleration cycle of about 1 second, before stripping the accelerated ions of most of their electrons, and injecting the beam into the AGS. The flux and the energy of the beam depend on the mass and charge of the accelerated ions. The number of ions per second extends from $3x10^{11}$ for deuterons, to $3x10^{9}$ for gold. In general, for gold ions from the TVDG, the total number of nucleons accelerated by Booster per second is about $6xl0^{11}$ at a maximum energy of about 1 GeV per nucleon.

The Booster receives all ions from EBIS Pre-Injector at energy of 2 MeV per nucleon. The number of ions per second extends from $3x10^{11}$ for helium to $1x10^{10}$ for gold. In general, for gold ions from the EBIS Pre-Injector, the total number of nucleons accelerated by Booster per second is about $2xl0^{12}$ at a maximum energy of about 1 GeV per nucleon.

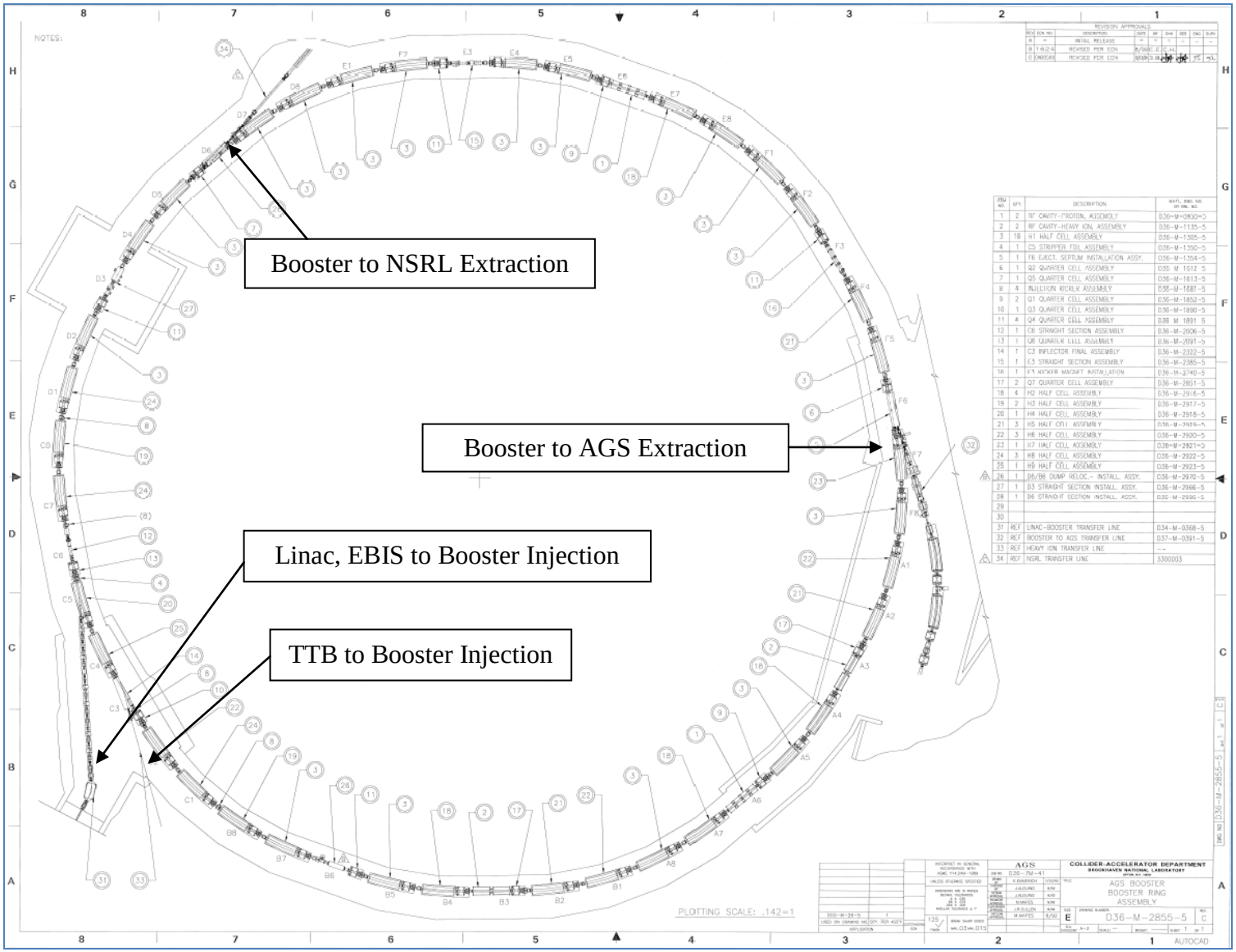

Figure 3.3.2.6 Drawing of the Booster Components

3.3.2.7.Alternating Gradient Synchrotron (AGS)

Since 1960, the Alternating Gradient Synchrotron (AGS) has been one of the world's premiere particle accelerators, well known for the three Nobel Prizes won because of research performed there with the particle beams.[9] Scientists at the AGS developed the concept of alternating gradient focusing, in which the field gradients of the accelerator's 240 magnets successively alternate beams of particles inward and outward, permitting operators to propel and focused beam simultaneously in both the horizontal- and vertical-planes. Figure 3.3.2.7.a shows the AGS's ring magnets. The AGS can accelerate $8x10^{13}$ protons with every pulse, and accelerate heavy ions, such as gold and iron. At the maximum rate, pulses extract every two- to three-seconds. The maximum energy is 30 GeV for protons, and 10 GeV/u for heavy ions. Currently, the AGS is an injector for the RHIC and accelerates low-intensity beams of polarized protons and heavy ions. Occasionally, the C-AD employs the AGS for accelerating a few pulses of high-intensity protons for a small experiment in the U line.

Figure 3.3.2.7.a AGS Magnet Enclosure

[9] Archival AGS and Linac Safety Analysis Report

Figure 3.3.2.7.b shows the AGS Ring enclosure. The 800-m circumference enclosure contains the focusing and bending electro-magnets, vacuum pumps, vacuum piping, RF devices, a superconducting snake-magnet, a warm snake electro-magnet, cooling-system piping, cryogenic-system piping, power cables, signal cables, kicker electro-magnets, a polarimeter, various radiation- and beam current-detectors, miscellaneous iron- and concrete-shield blocks, iron girder support beams, and an overhead crane. Power supplies and ventilation systems are located in external support buildings enclosed by the AGS ring. The AGS no longer requires the 200 MeV Beam Transport line directly from Linac, or the Slow Extracted Beam line from AGS into Building 912.

The main magnet power supply is the Siemens Motor Generator, Building 928, and the associated rectifier transformer yard. The RF power supplies are in Building 929. Five AGS fan houses ventilate the AGS ring, and two escape hatches meet the life-safety code. The backup power supply for the AGS ring magnets is the Westinghouse Motor Generator Set in Building 911. Figures 3.3.2.7.c, d, e, f, g, and h show these structures, along with a typical section of the AGS's shielding.

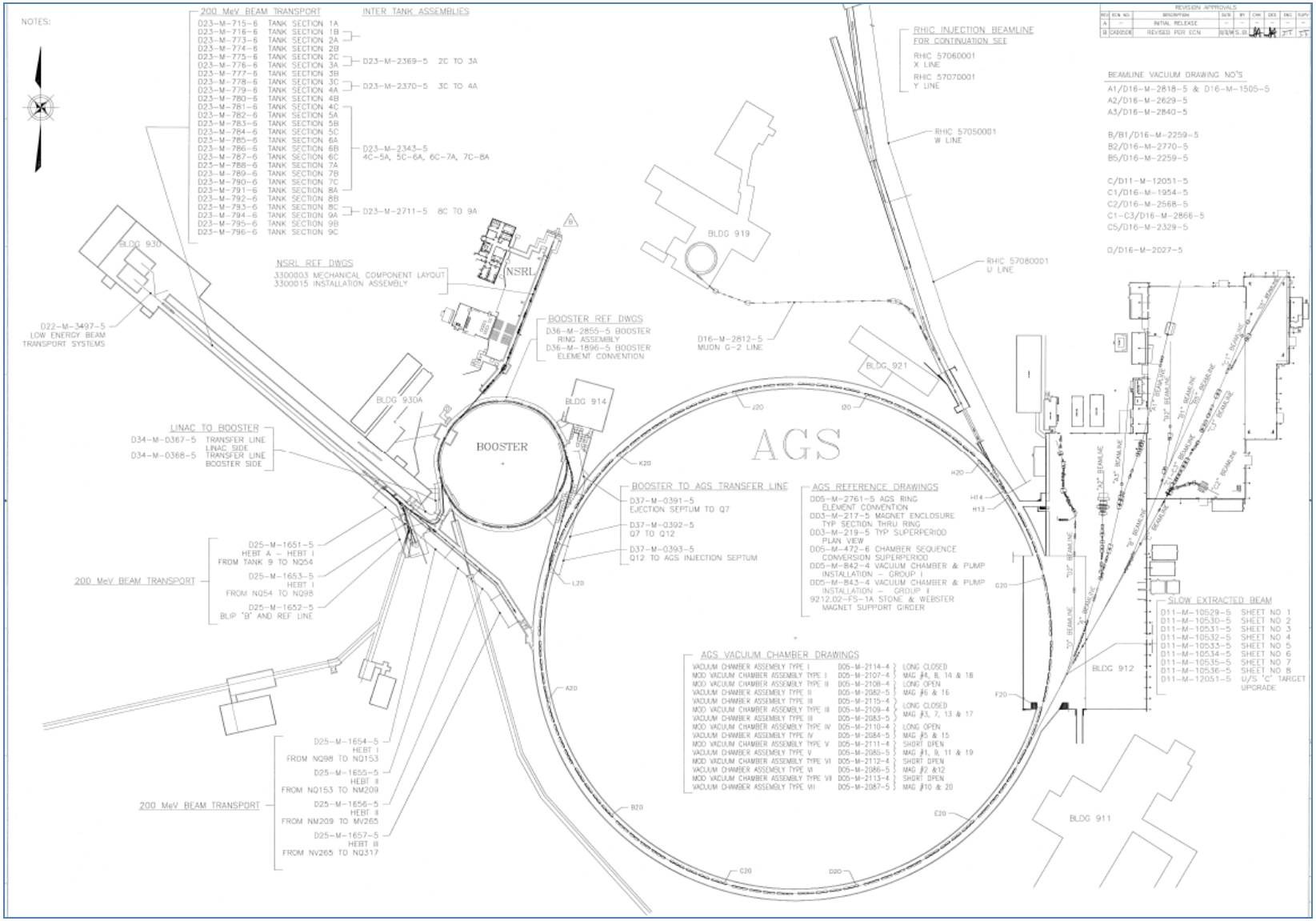

Figure 3.3.2.7.b AGS Component Drawing

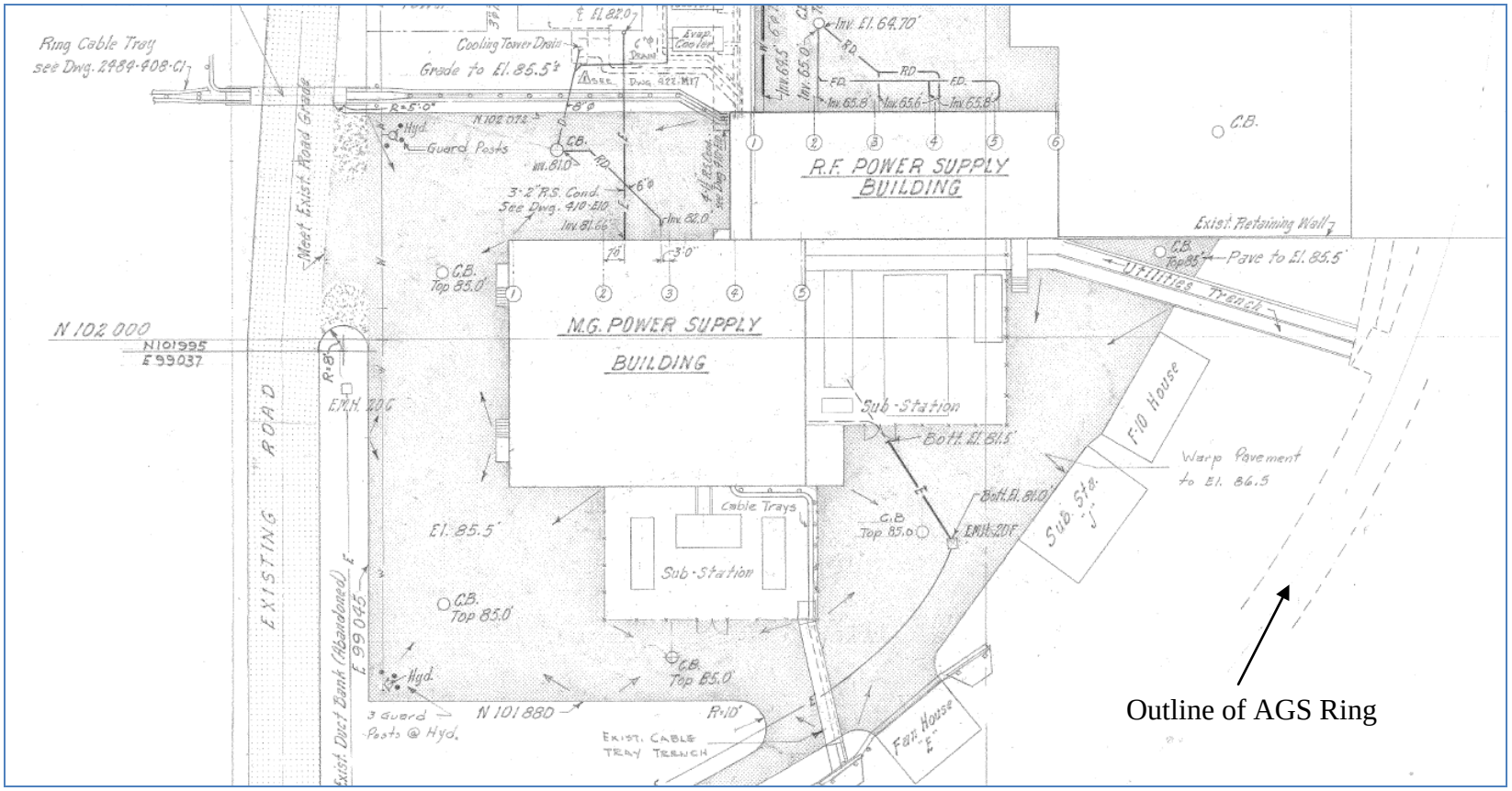

Figure 3.3.2.7.c Siemens Power Supply and Rectifier/Transformer Yard

Figure 3.3.2.7.d AGS RF Power Supply Building and Transformer Yard

Figure 3.3.2.7.e Typical AGS Fan House

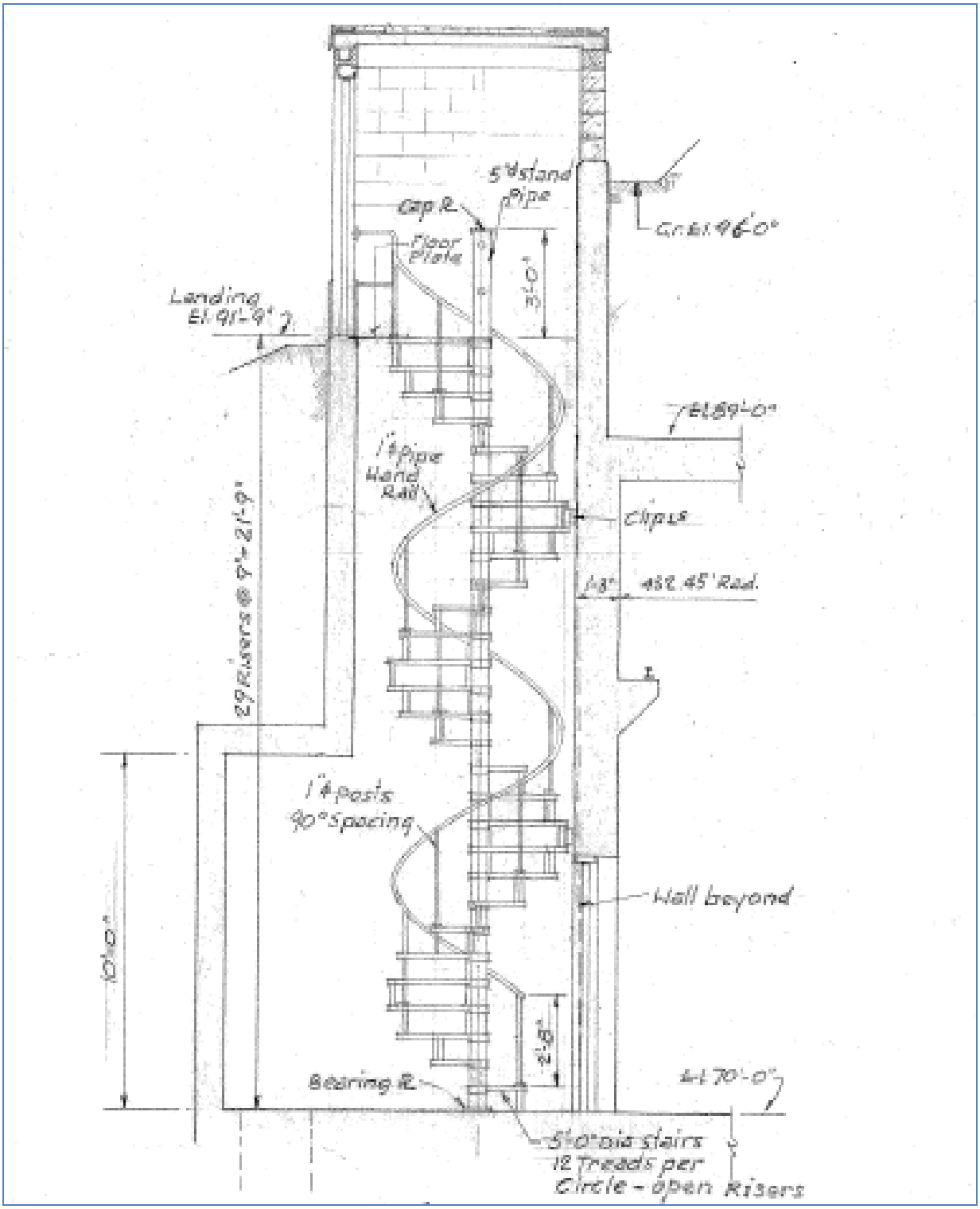

Figure 3.3.2.7.f AGS Escape Hatch

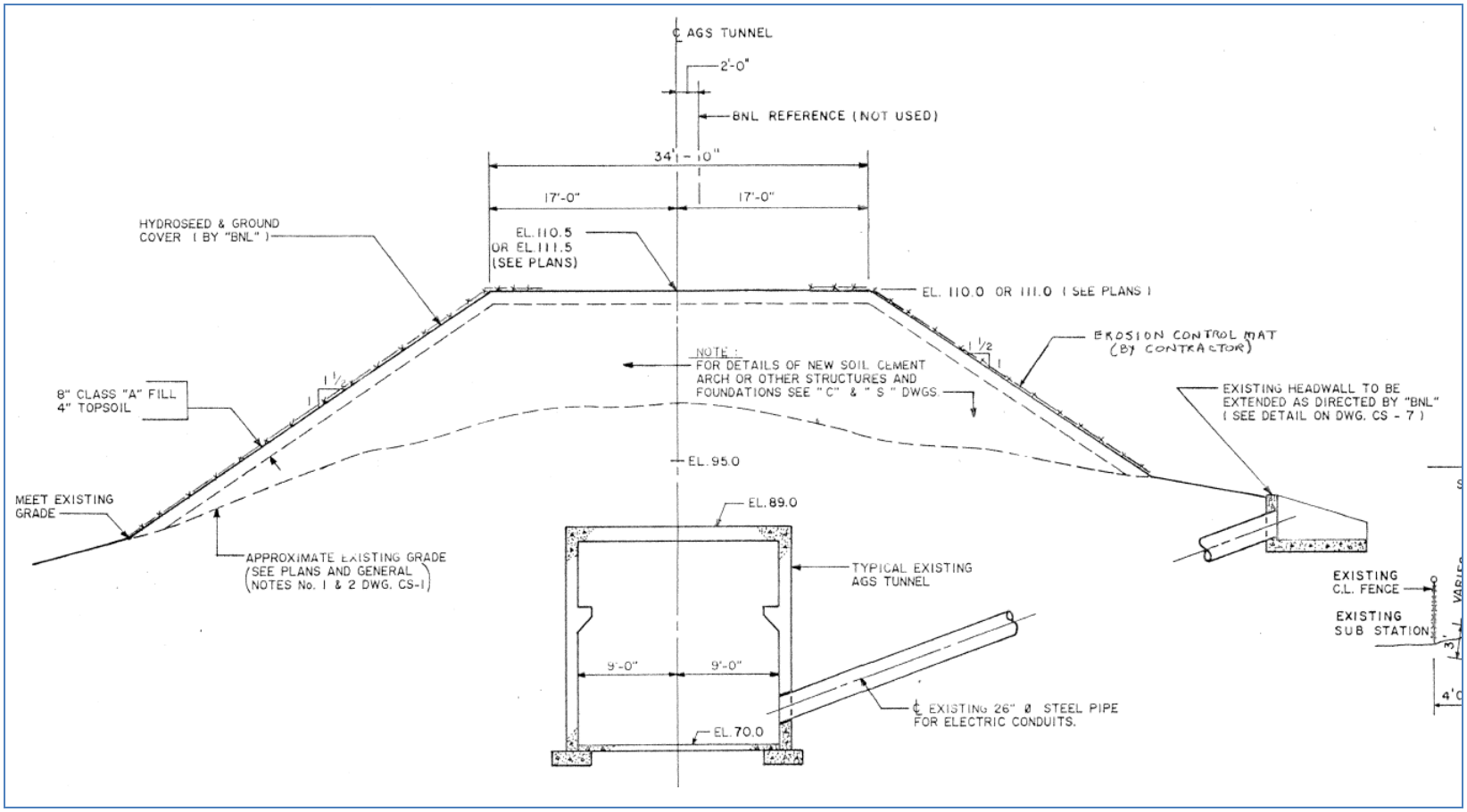

Figure 3.3.2.7.g Typical Section of AGS Ring Shielding After 1991

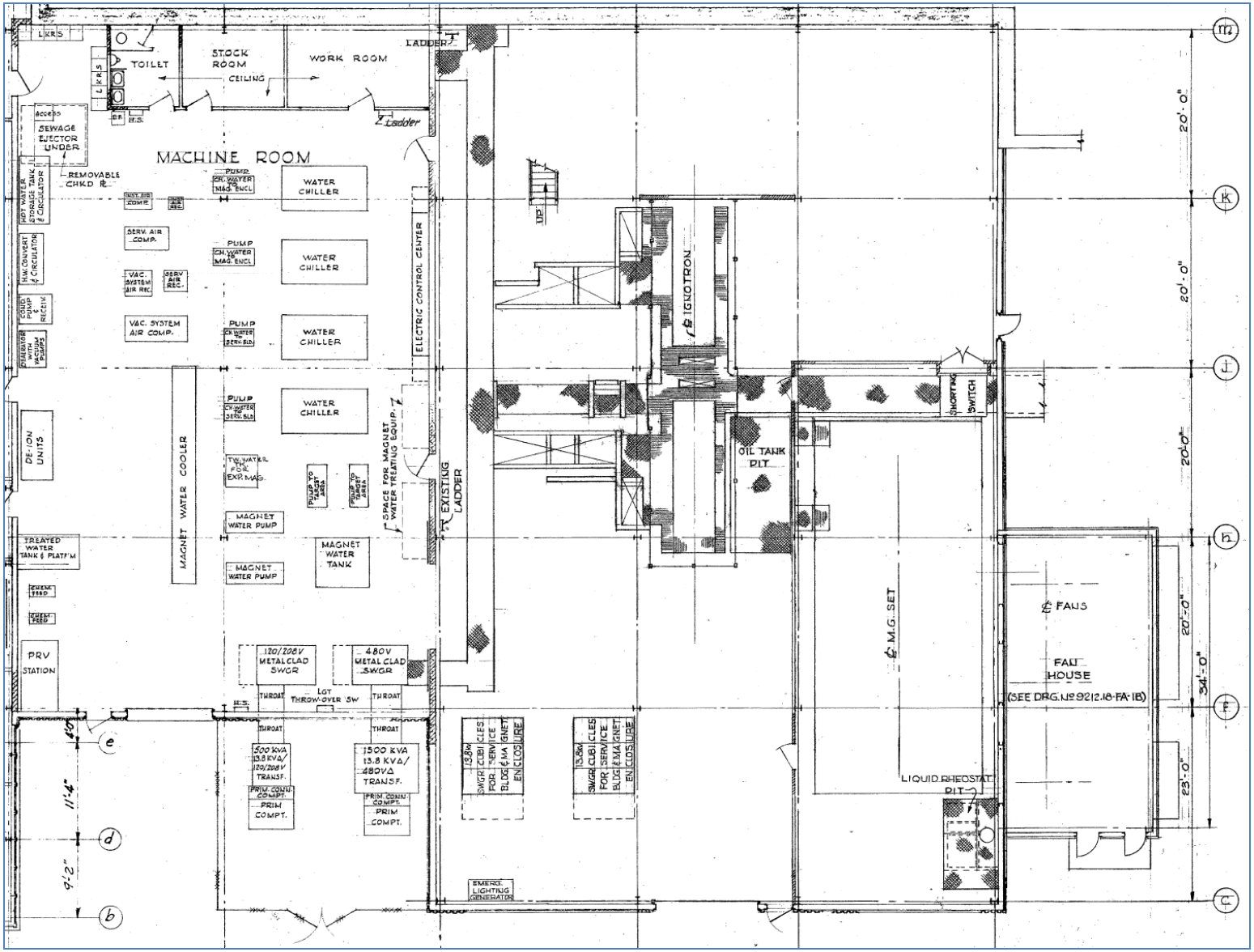

Figure 3.3.2.7.h Westinghouse Motor Generator Set for AGS

Figure 3.3.2.7.i shows a plan view of the 5-acre AGS Experimental Area (Building 912), the retired g-2 experimental area, the current ERL and Accelerator R&D Facility in Building 912, and the current AGS-to-RHIC line (AtR), which includes the U line.

During the 1960s through 2003, the concrete-block shielded beam lines in Building 912 carried the high-intensity proton-beam output of the AGS and used it for fixed-target experiments. The Slow External Beam (SEB) exited the AGS into Building 912 via the F-10 extraction magnet. C-AD disconnected this slow-beam extraction system, and it is no longer used. In the past, quadrupole magnets focused the SEB beam, which then entered the switchyard in Building 912. In the switchyard, electrostatic septa divided each pulse of high-intensity beam into four different paths, the A-line through D-line. Each new beam was some fraction of the original beam's intensity. An array of quadrupole- and dipole-magnets confined each of these beams of particles. The target, typically a few inches of platinum metal, was the source of secondary particles of various species with a wide range of energies. Following the target, a 15- to 20-m long concrete and iron beam-dump absorbed the remaining beam. Secondary beam-lines originated at the target, gathering and admitting particles of the desired mass, charge, and momentum employing beam separators, and guiding the secondary beam, via magnets, to the experimental apparatus. During high-intensity proton operations, the radiation near the A through D beam-lines, or in the A through D target caves could have been lethal. Thus, the C-AD and its predecessors shielded the sides and top of each beam line with a combination of concrete blocks and steel plates, each block or plate weighing 10- to 40-tons.

From the mid 1970s to the mid-1980s, the U-line took the high intensity beam for neutrino experiments. From 1999 to 2003, the g-2 experiment in the V line took the high-intensity beam. C-AD and its predecessor organizations used the H-10 extraction system in AGS ring and extracted the beam quickly (Fast External Beam, FEB). After 2003, all high-intensity fixed target programs ended.

Since 2003, decommissioning of high-intensity proton beam facilities reduced the ionizing radiation hazard in the AGS Ring, Building 912, U-line, and V-line. C-AD packaged hundreds of tons of radioactive magnets, radioactive lead, radioactive electrical-cables and other hazardous materials successfully, and processed via allowed waste streams. Measurable levels of 12.3-year tritium remain in the soil below the concrete floor of Building 912. C-AD computed the contour of tritium-radioactivity-concentrations in the soil and mapped the locations of former target stations and beam dumps.

In the last five years, C-AD renovated Building 912 and the AGS Ring, in particular, to meet the Department's current missions. For example, the new ERL and the new Accelerator R&D Facility reside in Building 912, and the FEB extracts low-intensity polarized-proton beams or heavy-ions beams from AGS into AtR line for use in the RHIC. Additionally, FEB can inject the Switchyard with beams if required for future fixed-target experiments in Building 912.

The cooling-water systems for those earlier high-intensity proton-beam experiments had cooling towers for primary heat rejection. The current experimental cooling-water systems associated with the experimental areas of the Booster, AGS, and Building 912 contain measurable amounts of tritiated water, and are isolated, closed-loop systems with heat

exchangers. All tritiated-water systems comply with the requirements in Suffolk County Article 12 .[10]

Building 912 covers the soil beneath the former high-intensity proton-beam target-areas and beam-dump areas. Building 912's roof and a concrete floor protect these activated soil areas. The C-AD identified and capped activated soil areas from past operations to prevent rainwater infiltration. The C-AD monitors, repairs, and reports on the integrity of caps every year.

[10] Cooling Water Radioactivity

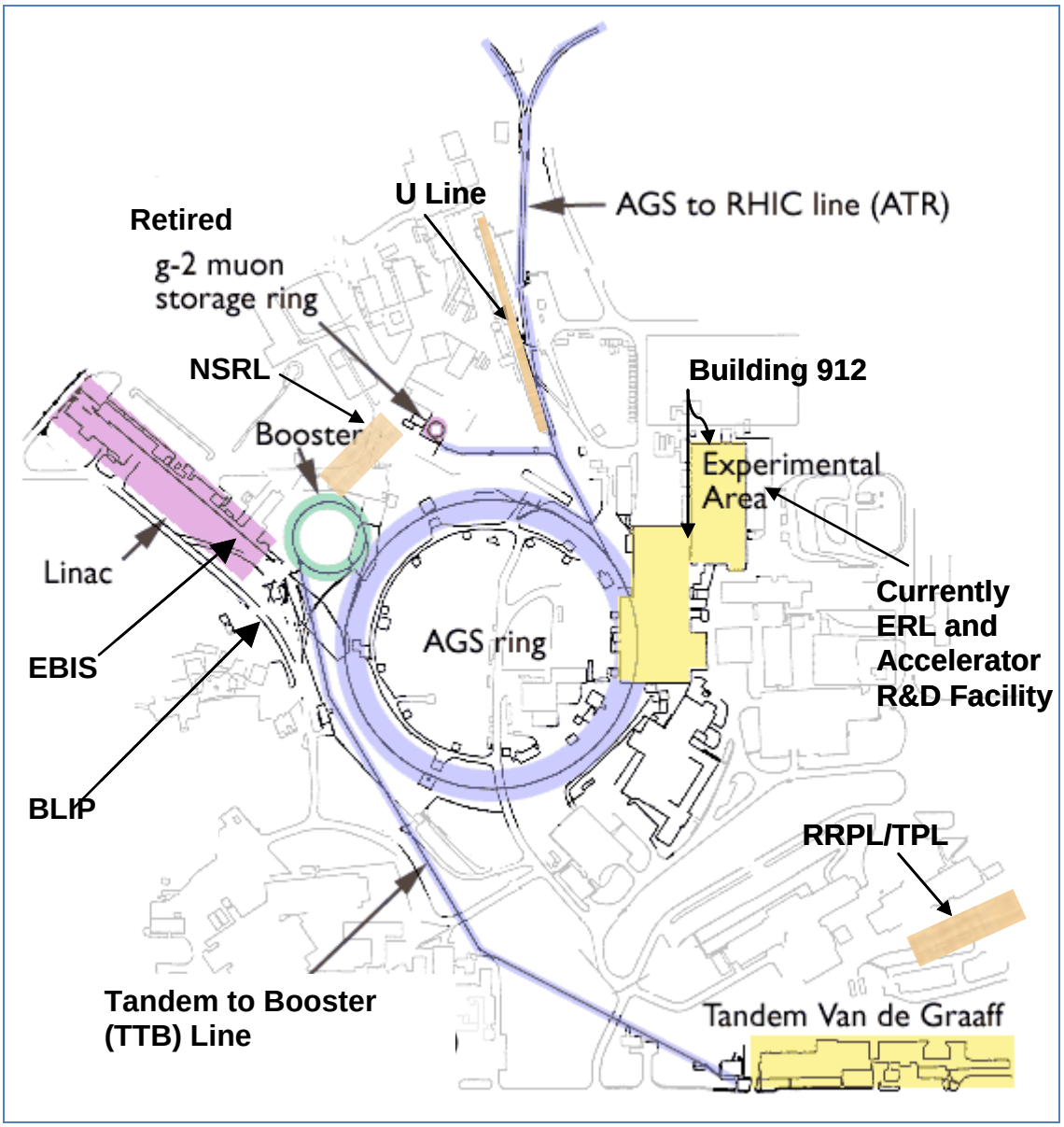

Figure 3.3.2.7.i AGS Experimental Areas

3.3.2.8.U-Line and Retired V-Line

An occasional experiment occurs in the U-line. This is a fixed-target experimental area and users normally surround the targets with radiation-dose detectors and particle detectors. While high-intensity protons may be used, these experiments are brief ones, and the integrated beam on target is a tiny fraction of the high-intensity beam limit for the U-line injector, which is

the AGS. Figure 3.3.2.8.a shows the construction of the U-line before building the connecting tunnel to the AGS; the AGS is at the forefront of the photograph, and the U-line beam stop is at the far end of the earthen berm shown in the photograph. The earth berm and the concrete pad under the U-line exist today, and protect activated soil below the U-line from rainwater infiltration. Any rainwater penetrating through the earth berm above the concrete pad gathers in orthogonal trenches (seen in the photograph) and it combines with large volumes of non-tritiated process cooling-water and storm-water runoff from the blacktopped areas. All water from these three sources in the trenches ends up in a recharge basin to the north in the present-day RHIC area. The C-AD capped the earth-covered beam dump at the end of the U-line with an impermeable liner.

Figure 3.3.2.8.a Photograph of U-line Under Construction, Circa 1970

Figure 3.3.2.8.b shows the retired g-2 experimental areas (Building 919), and the retired beam line. Figure 3.3.2.8.c depicts the concrete blockhouse at the beginning of the beam line where primary proton beam interacted with a nickel target, producing pions or muons for use in Building 919. The C-AD capped this blockhouse area with impermeable materials because there is activated soil beneath the target location in the blockhouse, and C-AD inspects and maintains the caps each year to prevent rainwater infiltration.

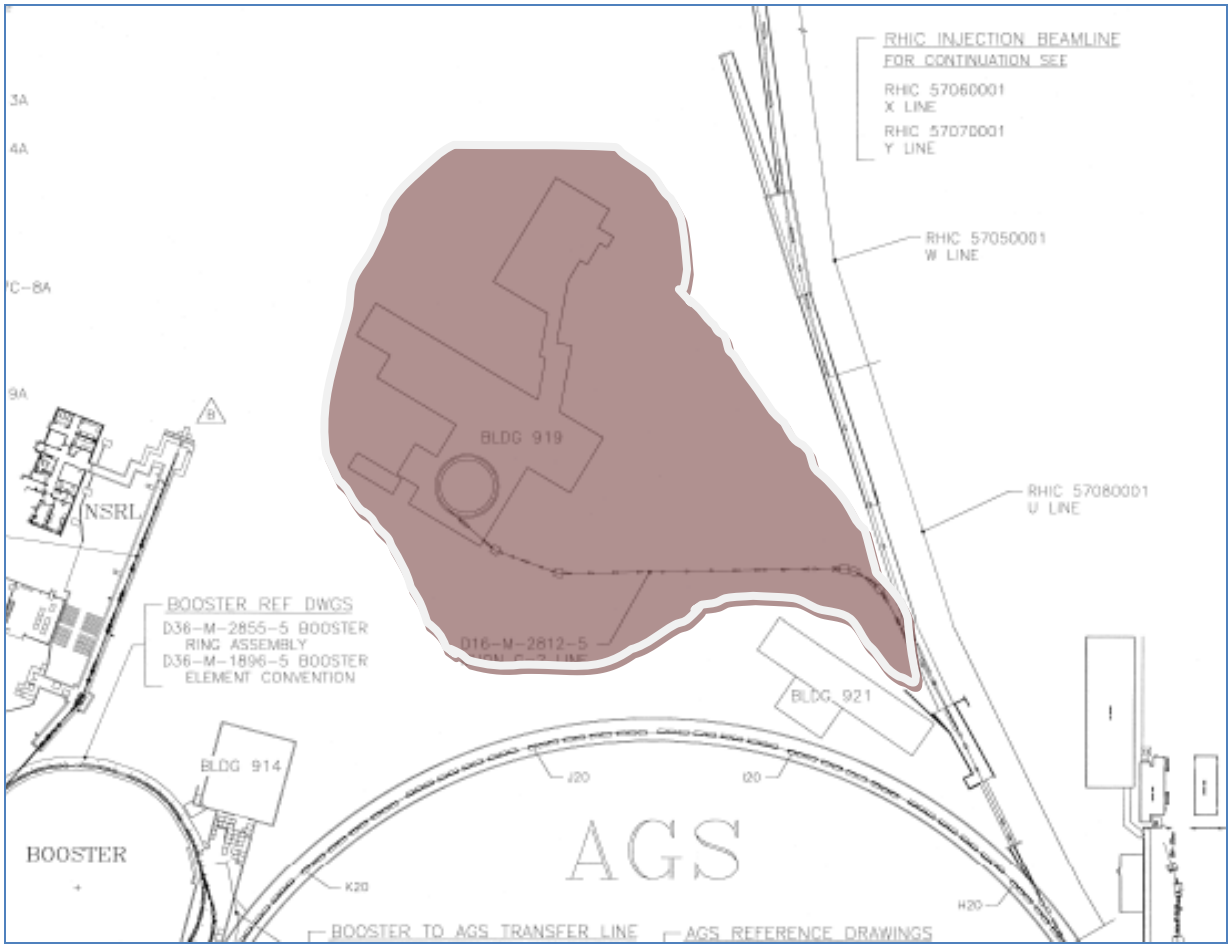

Figure 3.3.2.8.b V-line Area No Longer in Use (Highlighted Area)

Figure 3.3.2.8.c V Target Blockhouse

3.3.2.9.AGS to RHIC Transfer Line (AtR)

Beam bunches extracted from the AGS pass through AtR Transfer Line to get to the Collider. Figure 3.3.2.9 shows a schematic layout of the line. The AtR line begins downstream of AGS extraction; it comprises a G-10 Extraction Kicker, and an H-10 Extraction Septum inside the AGS ring. Before exiting the AGS, the beam undergoes a 4.25-degree bend through two dipole magnets and three focusing quadrupoles; beam-bunches then traverse the U-line to the W-line.

The U-Line contains an 8-degree bend comprised of four dipole magnets. Before this bend, a stripping station removes the last two electrons from the incompletely stripped heaviest ion species from the AGS. The stripper retracts when not needed. Six quadrupoles precede and four follow the 8-degree bend to afford tuning capability to prepare the beam bunches for acceptance into the W-Line.

The W-Line deflects the beam horizontally and vertically. The horizontal deflection is 3.5 m in an arc, and the change in vertical level is approximately 1.73 m; these deflections amount to a 20-degree bend. The horizontal deflection and the change in level work in concert; viz. a string of magnets deflects horizontally in a focusing arrangement, and a pair of vertical pitching dipoles deflects vertically. These magnets, together with the upstream quadrupoles in the U-Line, afford flexibility in choosing the focusing parameters at the switching magnet at the entrance to the RHIC ring; this ensures the symmetric behavior of the beam in the transfer branches into the two

rings. With the switching magnet de-energized, the beam stops in a marble-encased steel beam-dump at the end of the W-Line.

The term ‘beam stop’ indicates the primary beam interacts such that most of the primary beam no longer travels forward. Secondary particles created at beam stops move forward in the beam line along with one-third to one-half of the un-interacted primary beam. The term ‘beam dump’ indicates a repository for both the primary beam and any secondary particles; these dumps entrain virtually all of the primary beam’s energy, some of which is in the form of very high-energy highly penetrating muons. Beam stops are small metal objects one or two mean-free-paths in length, whereas beam dumps are massive structures of concrete, earth, and steel 50 m or more in length.

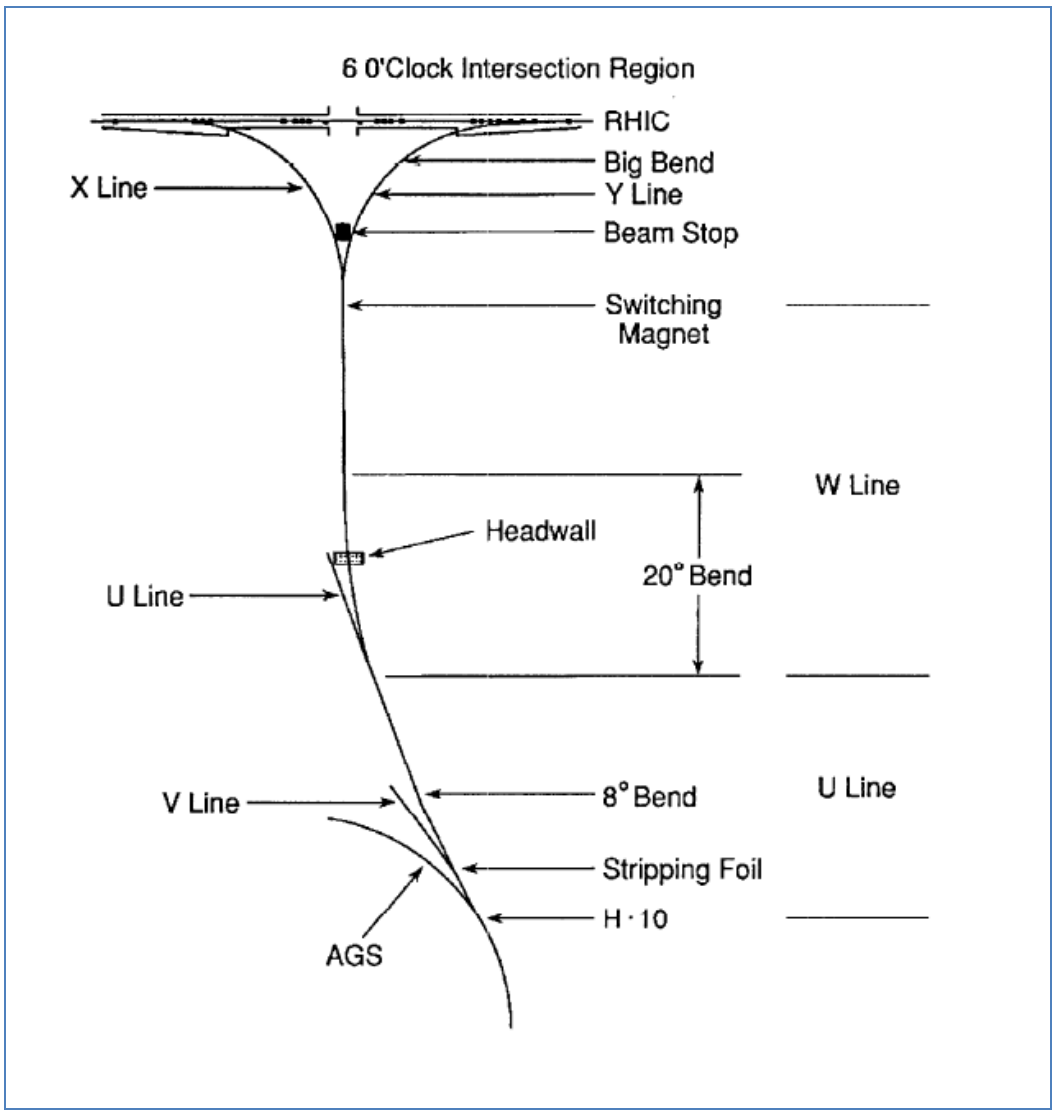

Figure 3.3.2.9 AGS to RHIC Transfer Line (AtR)

3.3.2.10.Collider

The RHIC encloses two accelerator beams in a 3833.8 m circumference tunnel, 4 m under the surface.[11, 12] The particle bunches travel in opposite directions inside two rows of cryogenic magnets, shown in Figure 3.3.2.10.a. The C-AD designates these two ion beams as the yellow- and the blue-beam. Each collider ring is made of hundreds of magnets. RHIC's magnets differ from those at the AGS because the RHIC's magnets are superconducting ones, using niobium-titanium wire to carry the electrical current at zero volts. At this time, the maximum stored electrical energy in a RHIC superconducting magnet circuit is 70 MJ at peak current, i.e., about 6000 amps. There are plans to increase stored energy by 30%. Each magnet cylinder contains the steel magnet plus the cryogenic- and electrical distribution-systems. Like the AGS, ion beams travel in a vacuum pipe in the middle. However, unlike the AGS, super-insulation wraps each magnet inside an evacuated cylinder, while beneath the insulation layers, super-cold helium circulates in piping to ensure that the nearby electrical conductor's temperature stays at 4.5 K. Unlike other accelerators, the RHIC's beam is not continuously injecting or extracting. Once operators complete the injection, beam comprises more than 100 continuously circulating bunches in each ring, each bunch containing billions of ions. During operations, thousands of ions collide each second, which very slightly reduces the ion content of each circulating beam. The force of each ion collision is the same as that when two mosquitoes collide; however, the temperature inside each collision is over 1 trillion degrees, far hotter than the sun.

Table 3.3.2.10 shows the past performance in terms of stored energy achieved at the RHIC for the Au-Au (Run-10), Cu-Cu (Run-5), D-Au (Run-8), and polarized protons (Run-9). The time in store was 53% of the total time for both the Au-Au (Run-10) and the p-p (Run-9) runs that take 20- to 30-weeks per year. This time includes all interruptions, such as ramping, set-up, maintenance, machine development, and accelerator-physics experiments. For ion-operation, the data in Table 3.2.2.10 are for beam energy of 100 GeV/u. For polarized proton operation (p↑), the beam's energy is stated. A comprehensive overview of past performance is at http://www.rhichome.bnl.gov/RHIC/Runs. Column 4 in Table 3.2.2.10 shows RHIC's performance for Au-Au has reached about half of the FY10 Accelerator Safety Envelope Limits.[13]

Table 3.3.2.10 Achieved Beam Parameters in RHIC

Mode	Number of Colliding Bunches	Ions/Bunch	Total Stored Energy of Particles in One Ring, GeV (kJ)
Au-Au	111	1.1×10^{9}	2.4×10^{15} (385)
Cu-Cu	37	4.5×10^{9}	9.8×10^{14} (157)
D-Au	95	1.0×10^{11} D 1.0×10^{9} Au	1.9×10^{15} D (304) 1.9×10^{15} Au (304)
p↑-p↑ 100 GeV	107	1.35×10^{11}	1.4×10^{15} (224)
p↑-p↑ 250 GeV	107	1.8×10^{11}	4.9×10^{15} (465)

[11] RHIC Design Manual
[12] Archival RHIC Safety Assessment Document, 1999
[13] For stored energy, FY10 RHIC ASE Limits were 6.0×10^{15} GeV p and 4.7×10^{15} GeV Au or equivalent

The magnet system of the collider consists primarily of a superconducting dipole and quadrupole magnets. These magnets guide and focus the counter-circulating ion beams into well-defined orbits in the regular arcs of the machine's lattice. A large complement of special magnets steer the beams into ionic collisions at as many as six interaction points.

The magnet system allows operation in an energy range corresponding to a magnetic rigidity from 97 to 840 T-m. Operation with either equal- or unequal-ion species in the colliding beams is required, imposing a ratio of up to 2.5 to 1 in the magnetic fields of the two rings. The superconducting magnets operate using primarily Au-197 with beam energies mainly between 30- and 100-GeV/u. Operating above 100 GeV/u for heavy ions in the arc dipoles is possible, based on magnet system's past performance.

The RHIC magnet's lattice separates into 6 arcs and 6 insertions for each of the two rings. In the arcs, the rings are 90 cm apart. In the two rings of the collider, there are 396 dipoles, 492 quadrupoles, 72 trim quadrupoles, 288 sextupoles, and 492 magnets for correcting field perturbations. The RHIC total inventory is 1740 magnets.

Like the Linac, EBIS, Booster, and AGS, the RHIC gives the circulating particles more energy via an RF system.

Figure 3.3.2.10.a RHIC Tunnel Enclosure

The RHIC's 2.4-mile ring has six intersection points where its two rings of accelerating magnets cross, and the particle beams collide. The collisions produce the fleeting signals that, when captured by one of RHIC's experimental detectors, provide physicists with information about the fundamental workings of nature. Thinking of RHIC's ring as a clock face, then the main experiments are at 6 o'clock (STAR), and 8 o'clock (PHENIX). Additionally, there is a polarized-hydrogen-gas target (JET) in the RHIC for elastic-scattering measurements when polarized proton beams are circulating. The JET target is located at the 12 o'clock intersection point, where the yellow- and blue-beams separate by about 10 mm instead of colliding. Only one beam at a time interacts with the JET target.

To maintain superconducting temperatures in the magnets, a 25 kW helium refrigerator housed in Building 1005R, and its supporting compressors housed in Building 1005H, produce the 4.5 K helium required for the RHIC.[14, 15] Figure 3.3.2.10.b is a plan view of the layout. The helium chill-down of superconducting magnets in the ring uses about 5 MW of electric power. The helium is distributed throughout the ring by vacuum-jacketed piping and valve boxes, plus ancillary warm piping and valves. The helium in the ring is at 3.5 bar. The vacuum-jacketed piping carries the helium to and from Building 1005R passing out-of-doors, into the RHIC tunnel (Figure 3.3.2.10.c), where it connects to the superconducting magnets and into the six Service Buildings located around the RHIC ring. The amount of helium in a magnet line is about 1.2 ton per sextant, and that in the supply line is about 0.35 ton per sextant.

[14] Archival Safety Analysis Report for 24.8 kW Helium Refrigerator, 1984
[15] RHIC Cryogenic System Safety Analysis Report, 1994

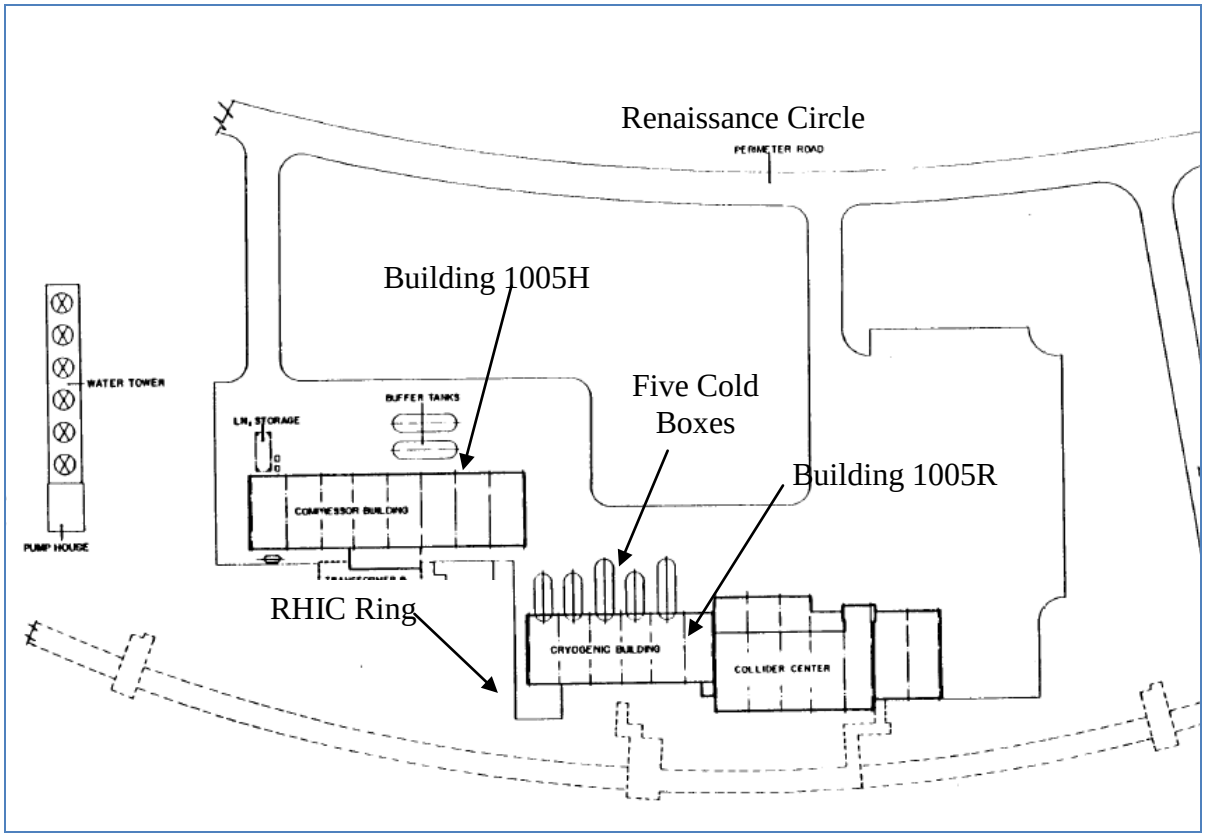

Figure 3.3.2.10.b RHIC Compressor and Refrigerator Layout

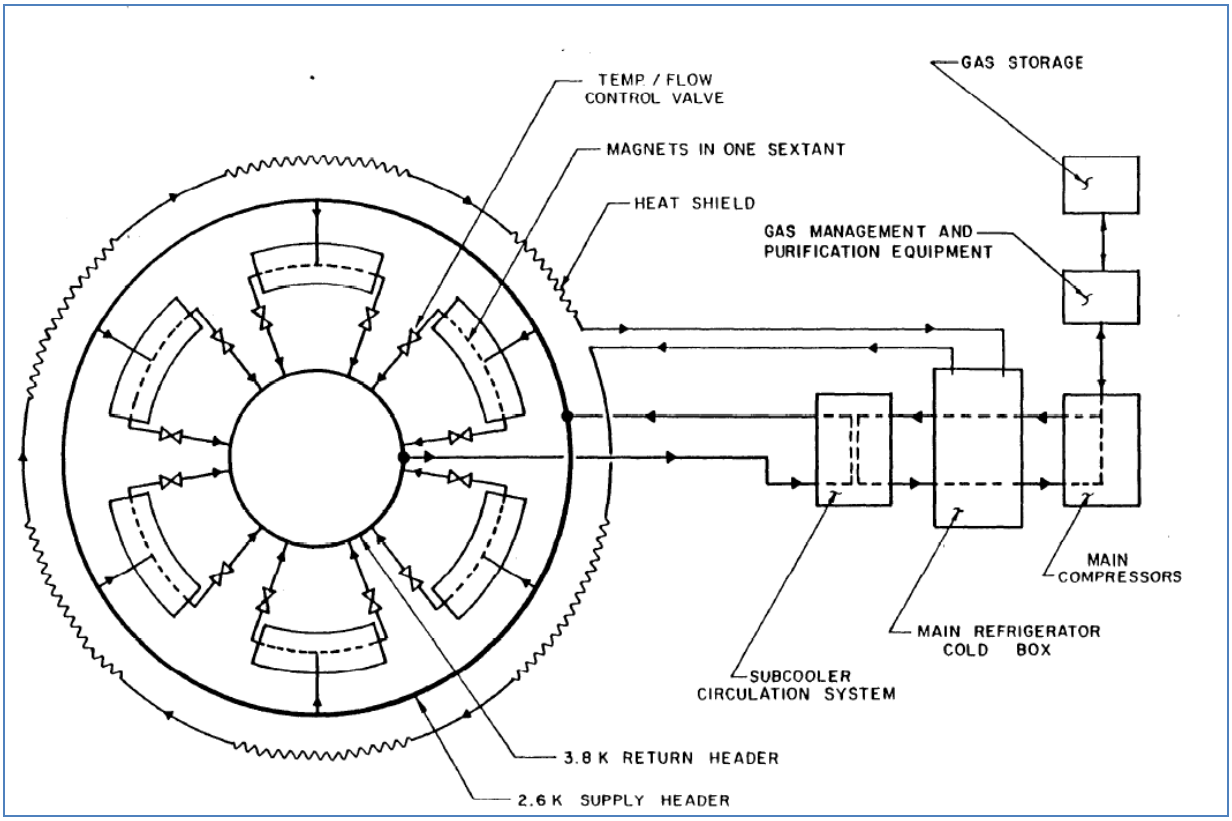

Figure 3.3.2.10.c Schematic of Piping Carrying Helium to One RHIC Ring

The main feature of RHIC's cryogenic system is the helium refrigerator in Building 1005R built in March 1986. This refrigerator, with its matching room-temperature compressor system in Building 1005H, produces the refrigeration required for the RHIC.

Building 1005R is a high bay, steel-framed, masonry construction building, located immediately west of, and contiguous to, the Collider Center (Building 1005S). Though contiguous, the two buildings are structurally separate to ensure acceptable acoustic levels in the Collider Center. The exterior of the building has five openings on the north side through which the Cold Boxes extend; these openings seal to the vacuum tanks of the Cold Boxes.

The Cold Boxes are five horizontal cylindrical vacuum tanks, four of which house and provide thermal insulation for the main refrigerator heat exchangers, valves, and piping. The fifth tank, the sub-cooler section, contains liquid helium pots and the associated heat exchangers. Each vacuum vessel meets requirements of the ASME Code for Unfired Pressure Vessels Section VIII, Division 1, for cylindrical vessels under external pressure; their design basis assures 10-psig internal- and 15-psig external-pressure at 100 ^{o}F internal- and external-temperature. These vessels are not ASME-code stamped because their maximum design operating-pressure differential does not exceed 15 psi. All vessels have a captive plate-type relief valve that opens as soon as the internal pressure becomes positive. The size of the relief valve is such that the largest contained process-fluid flow available vents off should a line rupture. These

relief valves are located on the out-of-doors section of the vacuum tanks. A cap prevents rain and snow from reaching these relief valves and causing their malfunction.

The cold-box vessels rest on two saddle-type supports. Two hatchways afford entry and for ventilation, one located on the end inside the building, the other outdoors mounted on the shell or end cap. The C-AD's OPM procedures list the safety requirements before and during access to cold boxes for repairs and maintenance.

The Compressor Building 1005H is a one-story high bay, similar in construction to 1005R. It houses the helium compressors and their equipment. One of the hazards in this building is the very high level of ambient noise when the compressors are operating Double hearing protection is required, and occupancy time is restricted to two hours per day during routine operations, and to four hours per day when only the utility compressor is energized. The noise hazard extends outside the building to near the helium- and nitrogen-vents. C-AD uses clean helium throughout the RHIC; operators purify it, removing contaminants with two parallel trains of liquid-nitrogen heat exchangers and carbon adsorbers in 1005H. When contaminants saturate one adsorber, operators isolate it and place the other on-line. From the Cryo-Control Room in Building 1005S, operators vent the high-pressure helium left inside the isolated purifier; this procedure creates a loud noise at the vent pipe on Building 1005H's exterior, about 100 m away. In 2010, the C-AD reduced the noise level at the vent using slow release valves; and before venting, operators ensure via a sweep that the outdoor area near 1005H has no personnel present. Additionally, the C-AD moved the vents from the side of the building to its roof.

Six service buildings and four support buildings are located contiguous to, and have penetrations into the RHIC Ring (Figure 3.3.2.10.d). The buildings are metal frame, pre-engineered structures with sprinkler protection, HVAC- and electrical-systems; some have overhead cranes. They contain valve boxes for the cryogenic system, power supplies for the RHIC magnets and RF systems, controls for stochastic cooling-systems, and controls for RF systems. In 2007, the C-AD added a trailer building at the 4 o'clock position of the Ring for control electronics for the RHIC's stochastic cooling-system. In 2009, C-AD added a small wooden building, and sited it on top of the RHIC berm at the 11 o'clock position, along with two penetrations for the stochastic-cooling controls.

The Collider Center (Building 1005S) is a four-story structure located just inside the RHIC ring at the 5 o'clock position. It is steel-framed with insulated metal siding and air conditioning. It contains shops, high-bays, offices, and the Cryogenic Control Room. Sprinklers and fire detectors are in-place throughout the building.

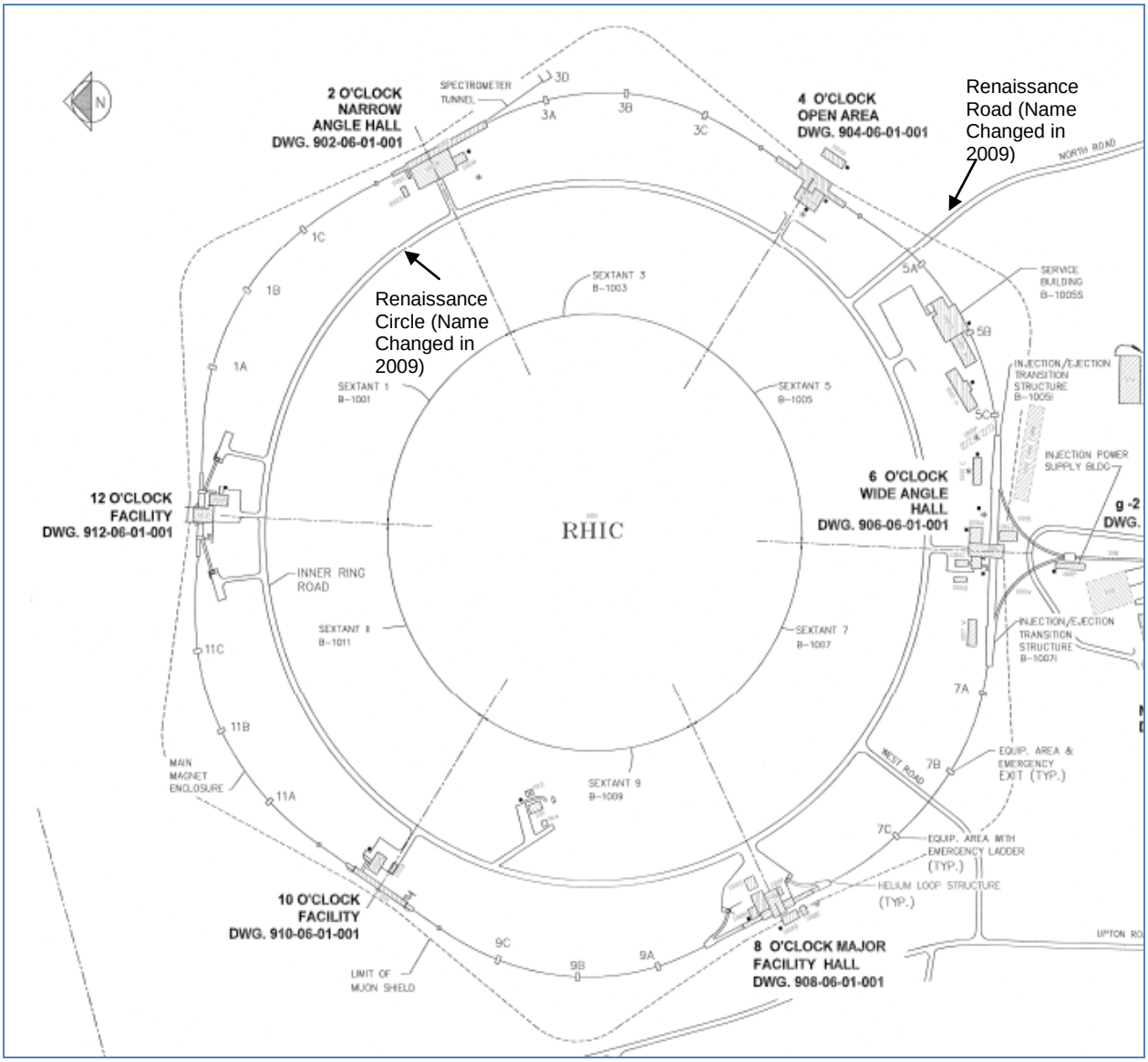

Figure 3.3.2.10.d Plan View of Collider Ring and Support Buildings

Figure 3.3.2.10.d shows the berm-shield's "wings" at each sextant outlined on the drawing of the whole ring as the "limit of the muon shield." Muons are negatively charged particles, much more massive than electrons. Muons slow down in soil by collisions with the electrons of the soil's atoms. Because muons at the RHIC have enormous kinetic energy, they penetrate deep into soil in straight lines. The strategic placement of these wings of soil absorbs muons created in the straight sections of the RHIC ring. Those generated in the turns of the ring travel at a shallower angle into the berm shield, and thus encounter more soil in their paths.

Figure 3.3.2.10.e shows typical cross-sectional views of the earth-berm shielding for the RHIC ring. At a minimum, there is 4 m of earth between the top the RHIC ring and the nearest accessible surface. At maximum, the shield is 6 m of earth over each beam dump.

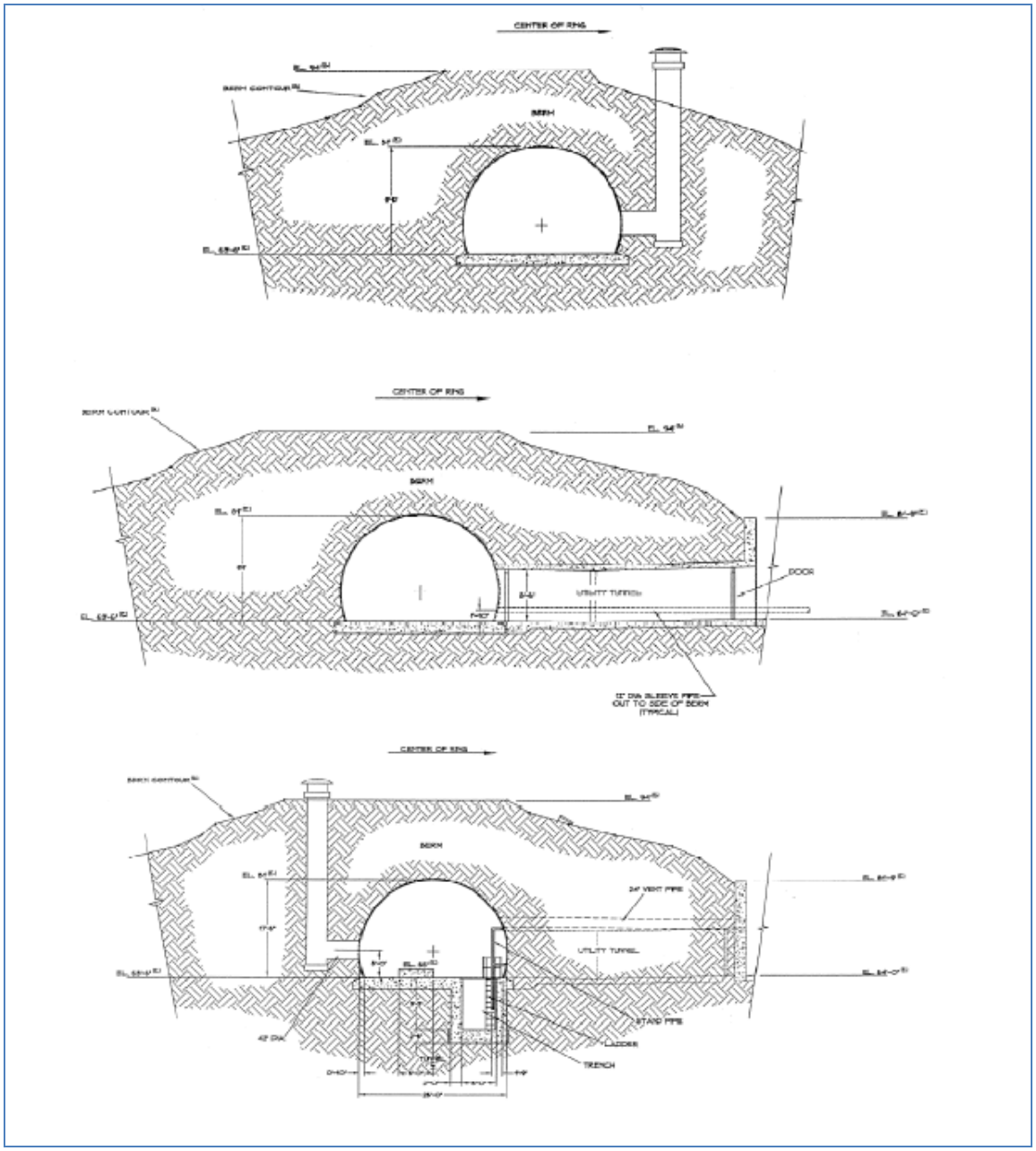

Figure 3.3.2.10.e Typical Cross-Sectional Views of the Collider's Berm Shield

An internal beam-abort system able to absorb the full-energy heavy-ion beam of the RHIC accelerator once per hour is located near the 10 o'clock IR. The yellow ring dump is on

the 11 o'clock side of IR 10, and the blue dump is on the 9 o'clock side. The system comprises three major subsystems: 1) The kicker magnets, 2) the pulse-forming networks, and, 3) the dump absorber. The beam-abort systems are located in the outer straight sections downstream of the 10 o'clock intersecting region (Figure 3.3.2.10.f). In this configuration, the beam extracts horizontally. The kickers, composed of five modules, are located downstream of the crossing point. They deflect the beam horizontally towards the ring's center, on to a 0.5 m C-C absorber whose front face is 23.5 m downstream from the midpoint of the kicker modules. Following the absorber is 2.7 m of carbon, and 2 m of steel that reduce the primary ion beam particles by a factor of 10^{10}.

Table 3.3.2.10 shows that the energy stored in the beam is 465 kJ for polarized proton-beams. This energy is large enough to damage components if lost in an uncontrolled manner; however, it is small enough to be disposed of in an internal beam-dump when the secondary-particle spray from the dump absorber in the forward direction is contained sufficiently so as not to quench the superconducting magnets directly downstream.

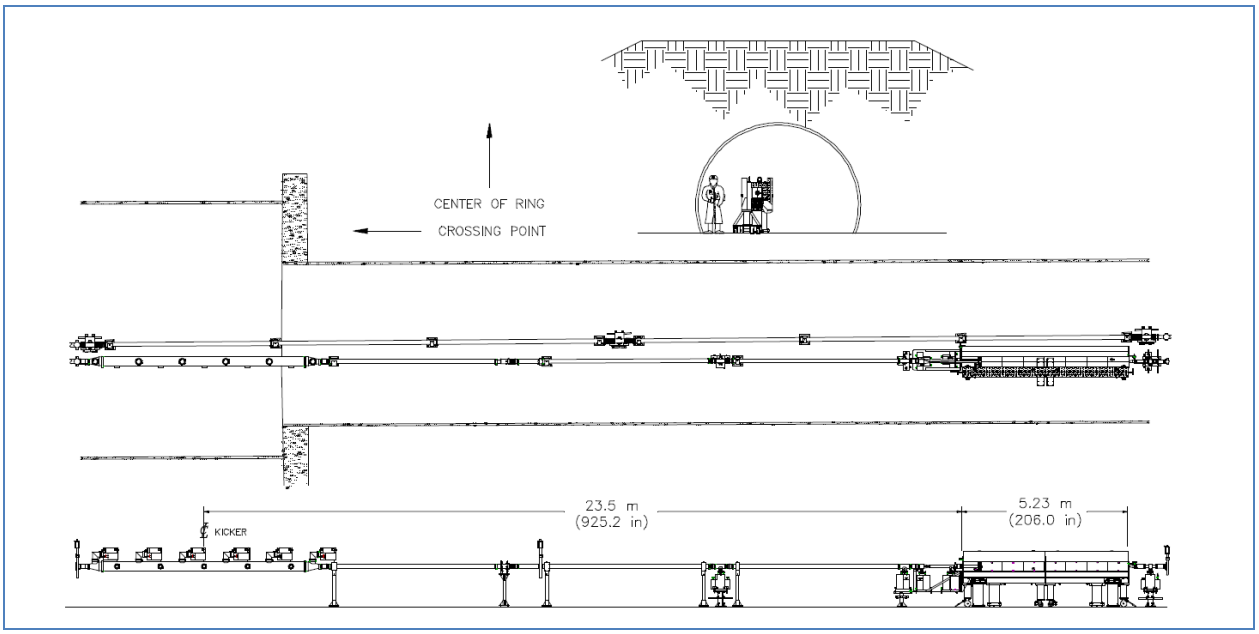

Figure 3.3.2.10.f RHIC Beam Abort System for One Ring

Several aspects of the dumps are important to safety. The first element of the dump absorber is a stress-resistant graphite composite, carbon-carbon (C-C), placed inside the vacuum chamber (Figure 3.3.2.10.g). This material essentially is impervious to thermal shock. Another safety feature is a marble shield that lowers the level of residual radiation in the walkway from the activation of the graphite absorber-blocks and the steel. The graphite, marble, and steel work together to shield the superconducting quadrupole magnets directly downstream from secondary radiation sprayed in the forward direction (Figure 3.3.2.10.h) preventing a quench.

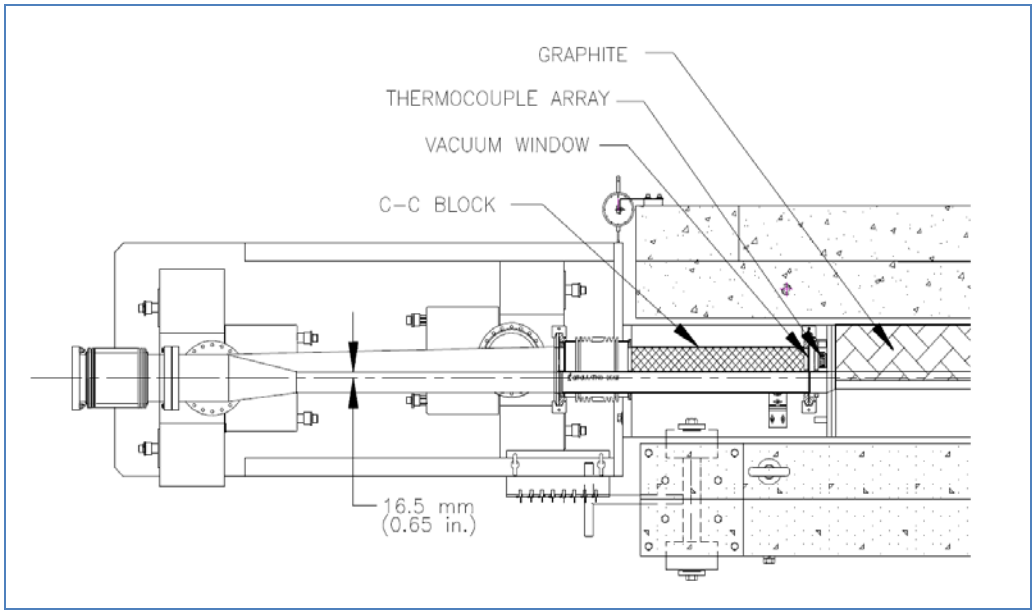

Figure 3.3.2.10.g RHIC Beam Dump Details

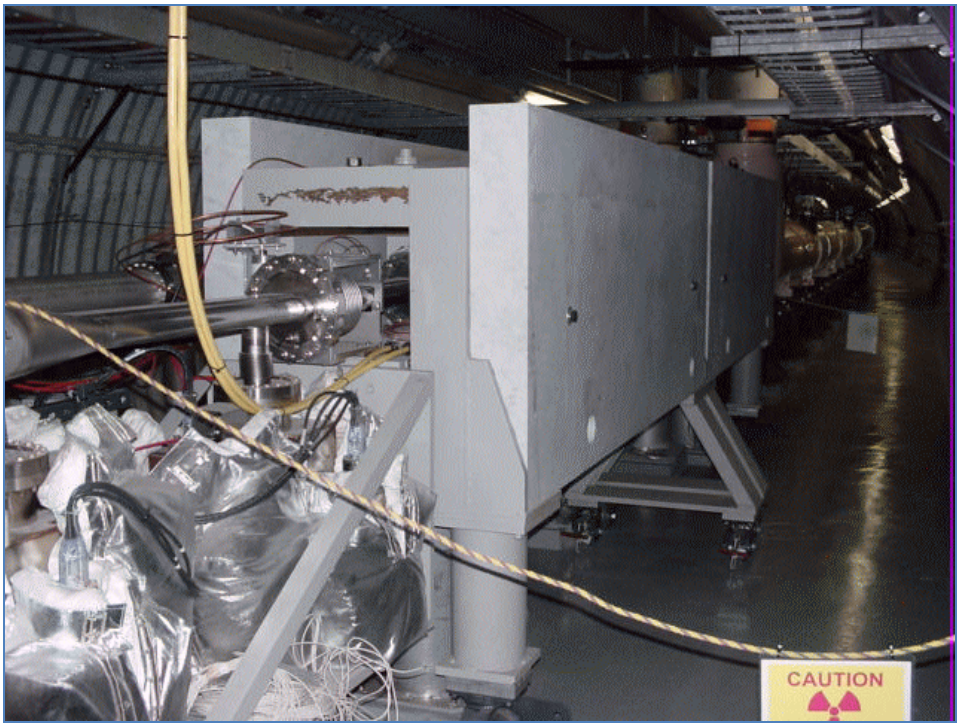

Figure3.3.2.10.h Marble Shield at RHIC' Beam Dump

During the RHIC 250 GeV proton acceleration, at highest intensities, if operators dumped the RHIC beam at near top energy, a quench originating in the superconducting magnets downstream of the dump absorber would occur. "Punch through" particles created in the dump absorber escape the dump absorber and go into the downstream superconducting magnet causing the quench. The main escape channel for these particles is the circulating beam-tube vacuum space. Quenching magnets is undesirable, and although this phenomenon does not directly limit the accelerated beam intensity, it tends to discourage the process of raising the intensity since repeated magnet quenching stresses the cryogenic piping possibly weakening it.

The correction was to thicken the wall of the circulating beam-tube within the dump-absorber section for operation in FY11 and beyond; this reduces by a factor of two the energy deposited in the first downstream magnet. For simplicity, this inner tube was short sections inserted one after another from the downstream end of the absorber. The thickness of the wall of the inner tube varies from 2- to 4-mm. The material is steel, as is the existing beam tube. This reduces the beam-tube's aperture at the absorber; however, C-AD designed this area of the RHIC to absorb all the radiation associated with dumping the beam. The reduction of the aperture is important at low energies when the circulating beam is largest. The original sizes of the beam tube are 46- and 42-mm rectangular, and the final is 38.4-mm round.

The earth berm outside the RHIC tunnel absorbs the spray from the secondary particles escaping the dump absorber during the dump's operation. To eliminate groundwater contamination from activated soil, C-AD added another safety feature, viz., installing impermeable caps on the soil berm over the dump (see Figure 3.3.2.10.i) to prevent the resultant activation products in soil, tritium and Na-22, from migrating into the groundwater.

Figure 3.3.2.10.i Impermeable Cap on Berm over RHIC Beam Dump

The RF system, located in the 4 o'clock region of RHIC tunnel, can capture, accelerate, and store for tens of hours bunches of particles corresponding to an average electric current of 70 mA (Figure 3.3.2.10.j shows one such system). The particle species vary from protons to fully stripped uranium ions. The RF system on both rings captures, accelerates and stores up to 120 bunches with an average total bunch intensity of $1x10^9$ particles/bunch for gold ions, and $2x10^{11}$ for protons.

The operation of the RHIC's acceleration and beam storage requires RF systems, each of which can function independently:

- The acceleration system captures the injected particle bunches, accelerates them through transition energy, and bunch shortening at top energy; this system operates at 28.15 MHz
- The storage system accepts the shortened bunches at top energy and assures sufficient longitudinal focusing to keep these bunches short during the multi-hour storage time; the storage system operates at 197.05 MHz
- The wideband system damps errors in the longitudinal injection of a single bunch or groups of bunches, and controls coupled-bunch instabilities; it consists of a separate, low-voltage, wide-bandwidth cavity for each ring, operating in the frequency range 23- to 33- MHz
- A 9 MHz system reduces longitudinal emittance and accelerates polarized protons

The RF system must capture the heavy-ion particles at injection, accelerate them through transition energy, and transfer bunches from a 28.15 MHz system to the 197.05 MHz system. The 28.15 MHz accelerating cavities operate with 300 kV before transition, and with 150 kV throughout the rest of the energy ramp for ions. The 197.05 MHz system operates with 4 MV total gap voltage. Proton particles inject into the RHIC above transition energy. Accordingly, the 28.15-MHz RF cavity accelerates the protons with a voltage of 300 kV, while the 197.05 MHz system stores the proton bunches at much smaller voltage of 50 kV.

The 9 MHz RF system assures longitudinal matching of long bunches of protons at injection. Matched longitudinal injection reduces the lengths of bunches at store, which, in turn, diminishes their hourglass shape. Long bunches at injection experience reduced electron-cloud effects, suspected to increase their transverse emittance.

In addition to these RF systems, stochastic-cooling systems, located throughout the RHIC's ring, use RF radiation. They operate on beams of energy greater than 100 GeV/n. A longitudinal stochastic cooling system in the 4- to 8-GHz bandwidth counteracts intra-beam scattering, preventing the escape of particles in a bunch from the RF bucket and becoming de-bunched around the ring. Horizontal- and vertical-stochastic cooling systems also counteract intra-beam scattering, preventing the beam's expansion. Horizontal- and vertical-stochastic cooling help reduce the particle bunches' size at the crossing point, thereby increasing the collision rate of ions for the experiments.

Figure 3.3.2.10.j 197.05 MHz RF Cavities in RHIC

In 2012 through to 2015, additional upgrades will reduce the size of the particle bunches at the crossing point, further increasing the collision rate of ions for the experiments. The two upgrades under construction are

- 56 MHz superconducting RF system for heavy ions and polarized protons
- Electron lenses for polarized protons

The 56 MHz superconducting RF system for heavy ions and polarized protons: In the existing RHIC RF system, each ring has two copper accelerating-cavities at 28 MHz, and five copper storage-cavities at 197 MHz. The 56 MHz cavity resides in the 4 o'clock region of RHIC and eventually may replace the copper storage-cavities. The 56 MHz cavity is a niobium superconducting quarter-wave resonator. The helium temperature is 4.2K. Superconducting operation versus room-temperature operation of the RF system saves operating money and energy. The 56 MHz cavity increases the RHIC's luminosity by affording a larger "bucket" for a particle bunch. The aim for its operations is 2014. A single cavity, with a design pressure of one

atmosphere serves both RHIC rings. A 1 kW amplifier provides make-up power for intrinsic losses, which are about 40 watts. The cavity is compliant with ASME Pressure Vessel Code.

Electron lenses for polarized protons: beam-beam interaction that causes tune shifts and spreads in the beam will limit the luminosity of polarized protons. When a proton beam collides with a low-energy electron beam (10 kV, 1 amp), the electrons partially compensate for the beam-beam-induced tune spread in the proton beam. With such compensation, operators can increase the proton-bunch intensity or the proton-beam's emittance decreases, leading to higher luminosity and increased collision rates at the RHIC experiments. The main components of the electron lens' systems are a superconducting magnet, an electron source, warm transport solenoids, warm steering magnets, drift tubes, an electron collector, and power supplies. The electron lens systems use low-loss current leads. Proton bunches in the two RHIC beams collide with low-energy electron beam bunches over a short path of several meters in each ring. The two electron-lens systems are located at RHIC's IR10. The superconducting solenoids cool with helium, supplied via a Dewar flask with a cryo-cooler, to reduce boil-off.

The C-AD addresses upgrades and amends the SAD and ASEs through the Unreviewed Safety Issue Determination program.[16] Improvements in the accelerators allow increased numbers of ions per bunch and increased ion energy at the RHIC. However, as part of this SAD, the C-AD analyzed the hazards and identified appropriate controls for increases in intensity and in energy. As a result, the C-AD upgraded the ASE for RHIC to $5x10^{13}$ polarized protons at 300 GeV in each ring.

Further upgrades under consideration are

- Transverse damper for heavy-ion transition
- Collimation upgrade for heavy ions and polarized protons
- Low-energy electron cooling for heavy ions
- Beam-position monitor upgrade
- In-situ beam-pipe coating to improve the vacuum
- Transverse feedback for heavy ions and polarized protons

3.3.2.11.PHENIX

The PHENIX particle-detector records many different particles emerging from the RHIC's ion collisions, including photons, electrons, muons, and hadrons.

This detector weighs 4,000 tons and has a dozen sub-systems. Three large steel magnets produce high magnetic fields to bend charged particles along curved paths. Tracking chambers record hits along the flight path to measure the curvature, and thus, to determine each particle's momentum. Other detectors identify the type of particle and/or measure its energy. Still others record where the collision occurred and determine whether each collision was "head-on" (central), a "near-miss" (peripheral), or something in between.

Three large magnets constitute the core of PHENIX (Figure 3.3.2.11). A central magnet provides an approximate axial field surrounding the collision point. Along the beam line, two magnets, muon north and muon south, generate radial fields for analyzing the muon tracks.

[16] OPM 1.10.1 Procedure for Documenting Unreviewed Safety Issues

These unique magnets have coils that excite a central conical steel-piston. The magnetic flux returns through a steel lampshade, providing a radial field in the interior volume.

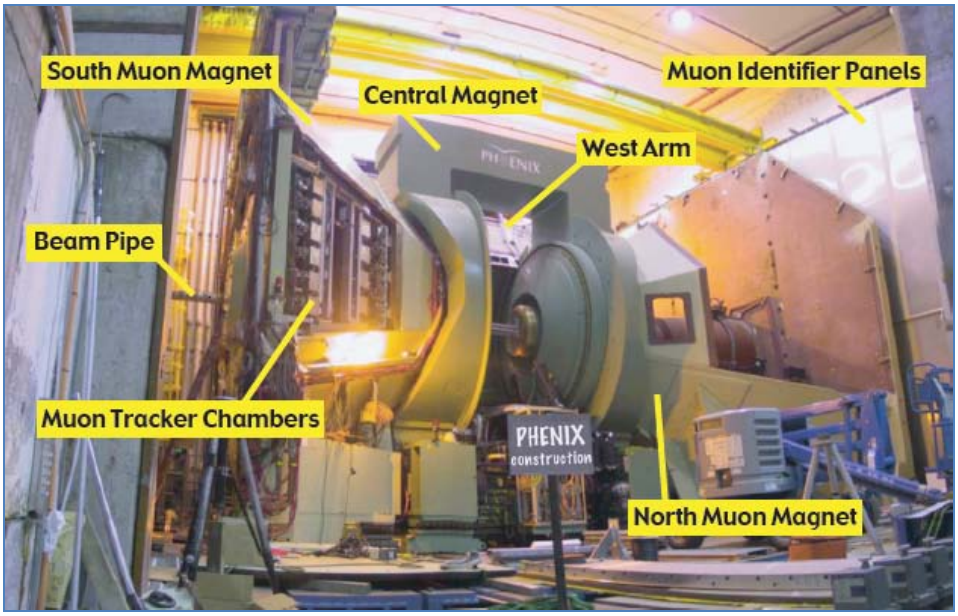

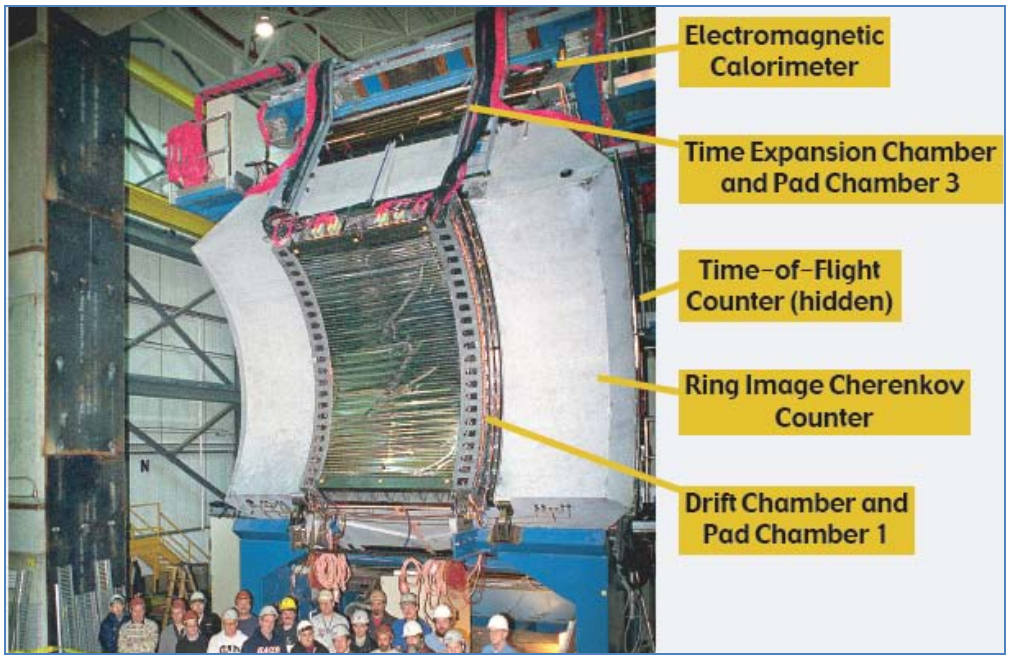

Figure 3.3.2.11 Magnets and Detectors at PHENIX

3.3.2.12.STAR

The Solenoidal Tracker at the RHIC's (STAR) detector tracks the thousands of particles produced by each ion collision there. Weighing 1,200 tons and as large as a house, STAR is a massive detector (Figure 3.3.2.12). STAR searches for signatures of the form of matter that the RHIC creates, i.e., quark-gluon plasma (QGP).

Detecting and understanding QGP allows us to understand better the universe in the moments after the Big Bang where our surroundings began their motion.

STAR consists of several types of detectors, each specializing in detecting certain types of particles or characterizing their motion. These detectors work together in an advanced data-acquisition mode, and subsequent physics analysis. STAR's main detector is the Time Projection Chamber, which tracks and identifies particles emerging from heavy-ion collisions. As each collision occurs, STAR measures many parameters simultaneously to look for signs of QGP. By using computers to reconstruct the sub-nuclear interactions that produce the particles emerging from each collision, the detector can, in a sense, run time backwards.

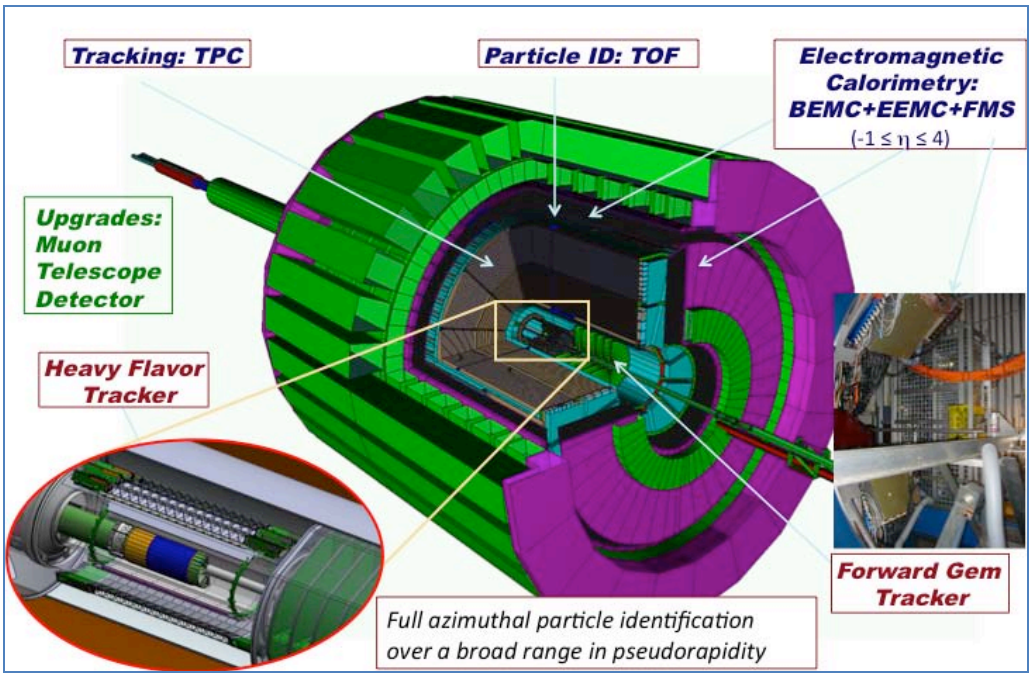

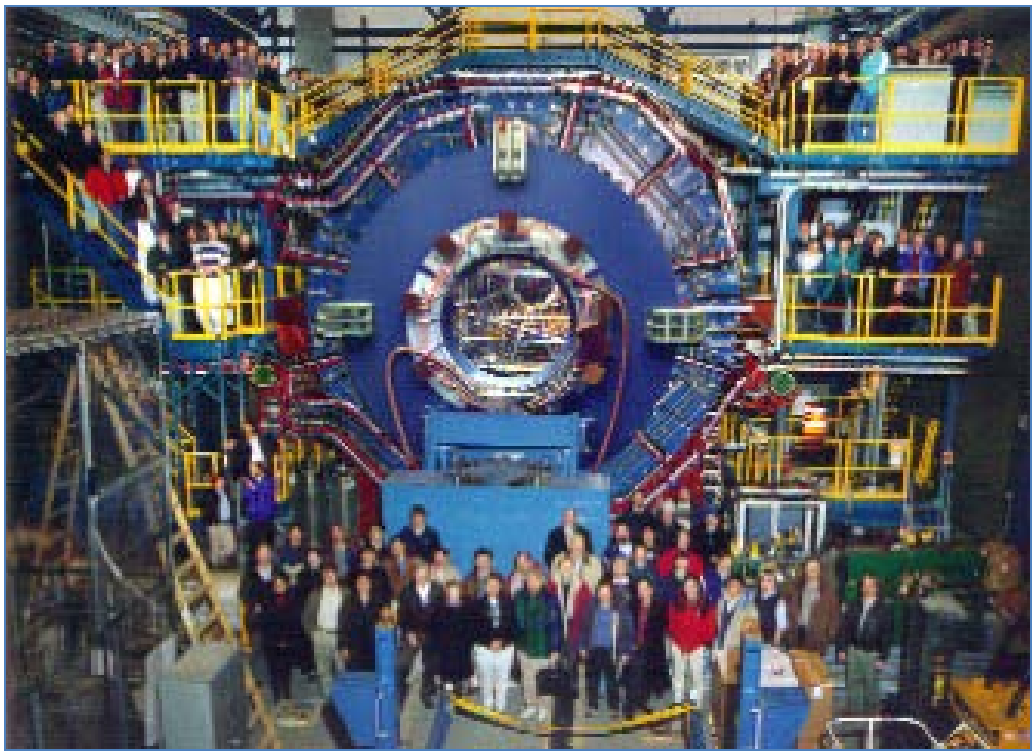

Figure 3.3.2.12 Magnets and Detectors at STAR

3.3.2.13. ANDY

ANDY is a proposed experiment at RHIC to measure the analyzing power for forward low-mass Drell-Yan production in transversely polarized proton collisions at high energy. The status of the project, and plans for completing the measurement in the next two years are as follows.

The basic measurement is to observe the electron- and positron-decays (dileptons) of a virtual photon. The energetic dileptons will be detected in a lead-glass calorimeter (ECal) mounted in the forward direction at RHIC's IP2. Experimenters will discriminate the dilepton signal from the background by vetoing hadrons via a hadron calorimeter (HCal) mounted immediately behind the ECal. Experimenters further discriminate hadrons from electrons by using segmented scintillators sandwiching a converter. The pre-shower-converter arrangement discriminates photon backgrounds from the dielectrons. Experimenters expect about 9400 dielectron events in a 150 pb^{-1} data sample with this modular arrangement.

A primary question addressed during RHIC run 11 was the impact of collisions at IP2 on the luminosity and backgrounds at IP6 (STAR) and IP8 (PHENIX). The conclusion is that operators can initiate at IP2 without significantly impacting IP6 or IP8, and that the integrated luminosity required for the first transverse-spin DY measurement is deliverable in subsequent RHIC runs. Concurrent with the development of IP2 collisions, >5 pb^{-1} of polarized proton collisions was recorded with left/right symmetric modular HCal detectors.

Plans are to stage an ECal and the final pre-shower/converter arrangement for the RHIC's run 12. Figure 3.3.2.13 illustrates the experimental configuration in Run 11 at IP2.

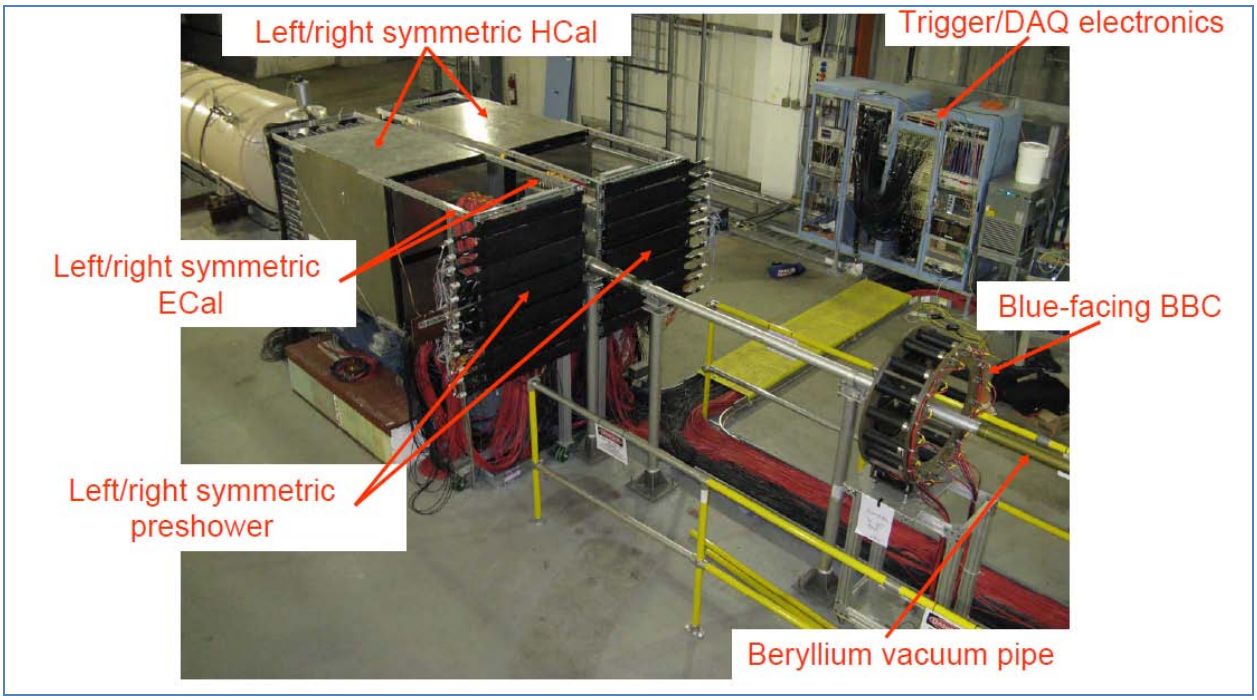

Figure 3.3.2.13. RHIC Run 11 Configuration of ANDY

3.3.3.NASA Space Radiation Laboratory (NSRL)

The NASA Space Radiation Laboratory (NSRL) is an experimental facility designed to take advantage of heavy-ion beams from the Booster accelerator.[17] The NSRL's users conduct radiation biology studies that are of great importance to the future of manned space flight. Radiations encountered in space may cause adverse health effects in humans, especially during prolonged space missions beyond the earth's protective magnetic field. Before such missions can be undertaken, NASA needs a much more detailed understanding of these effects to provide a basis to effectively protect astronauts. The TVDG, EBIS, and Booster accelerators used for these studies match well with the ions and energies encountered in space. Heavy-ions originating in the TVDG or the EBIS travel through to Booster for acceleration up to high energies. The Booster extracts energetic heavy-ion beams to the shielded NSRL target room where various specimens are exposed. Figures 3.3.3.a through 3.3.3.c show the layout of the NSRL facility.

Of particular uncertainty are the effects of long-duration radiation from the high-energy heavy-ion components of galactic cosmic rays during space flights. Here, many NSRL studies with cells, tissues, and animals provide estimates of such risks to humans in space.

[17] Archival NSRL SAD

Figure 3.3.3.a NSRL Facility off the AGS Booster

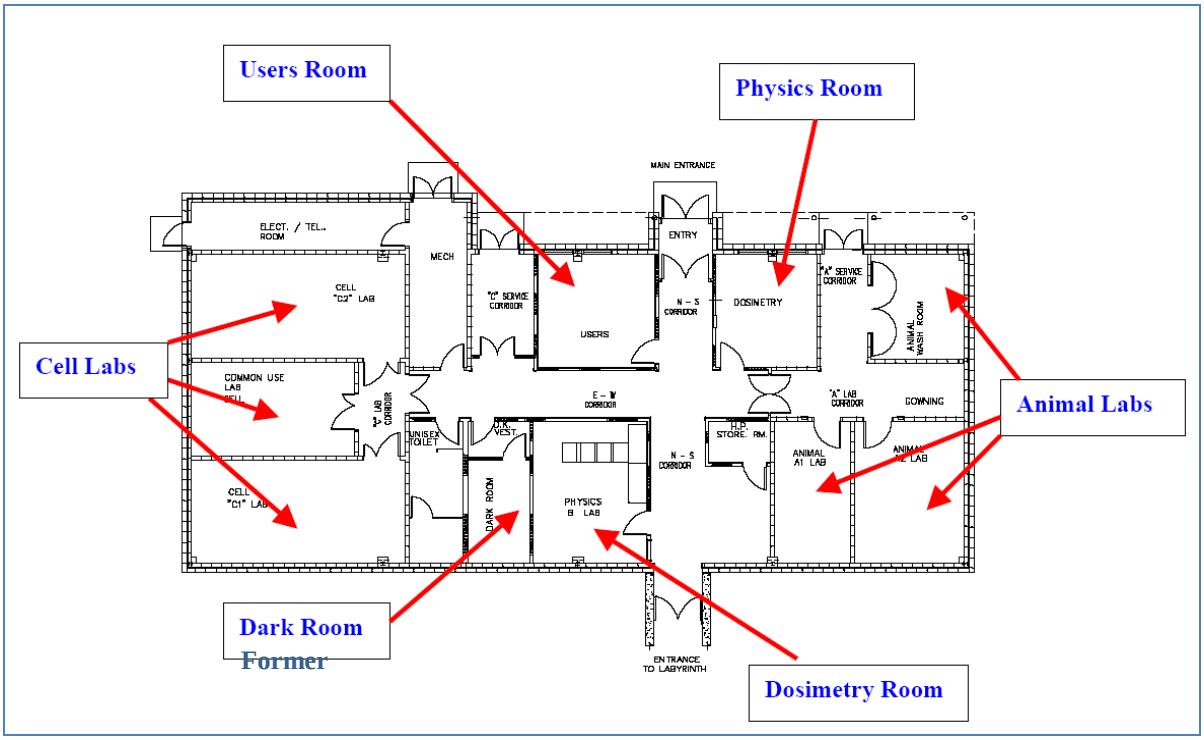

Figure 3.3.3.b NSRL Facility Plan View

Figure 3.3.3.c NSRL Facility Target Room and Tunnel

On occasion, the C-AD allows studies using fixed targets, such as accelerator components, radiation detectors, solid-state circuitry, metals, and other materials for a variety of outside users, if there is no conflict with NASA users. These studies use the ions and energies from the Booster similar to those used by NASA. The C-AD reviews all studies, including those performed by NASA, for safety and environmental protection before allowing the study with the beam.

Access to the Target Room at NSRL involves using an RFID system to track people going in and out, and optical turnstiles, two in tandem, that count each person going in and each person going out. They also track the direction of the travel, in or out. Before entry, each individual pulls an access key from a key tree using his or her iris as recognition of training (Figure 3.3.3.d). An RFID tag attached to the key ring identifies and monitors the specific access-key entering and leaving so assuring that each person entering is carrying a key, and has left the Target Room before initiating the beam for experiments. If there are failures of this entry system, C-AD has alternate systems available including a gate watch.

Figure 3.3.3.d NSRL Access System to Target Room

Table 3.3.3 shows the beam ion species and energies routinely available at NSRL. Different isotopes of some ions are also available. With the commissioning of EBIS, virtually all ion species are available. It has become routine to change beam energy, and at the request of a user, C-AD adjusts beam energy different from that listed in the Table 3.3.3. Intensity per spill refers to the number of ions delivered each spill. The spill structure during most radiobiology exposures has a 3.8-second repetition time. During the 3.8 second period, the ions extract from Booster more or less uniformly in time during a 0.3-0.4 second spill, followed by a ~3.4 second beam-off time. C-AD achieved the intensities using the TVDG as the ion source. When using EBIS, the intensities are significantly lower but continued experience and the addition of a focusing magnet for EBIS beams injecting into Booster will increase the intensity available for NSRL. The LET, or Linear Energy Transfer is for a water target and is in units of keV per micron.

Table 3.3.3 Beam Ion Species and Energies Used Previously at NSRL

Ion Species	Energy (MeV/nucleon)	Maximum Intensity (ions per spill)	LET (keV/μ in water)
H-1	50 - 2500	6.4×10^{11}	1.26 - 0.21
He-4	300	0.88×10^{10}	1.413
C-12	135 - 1000	1.2×10^{10}	21.21 - 8.01
O-16	100 - 1000	0.4×10^{10}	47 - 14
Ne-20	300	0.10×10^{10}	35.34
Si-28	94 - 1000	0.3×10^{10}	151 - 44
Cl-35	500 - 1000	0.2×10^{10}	80 - 64
Ar-40	350	0.02×10^{10}	105.8
Ti-48	150 - 1000	0.08×10^{10}	265 - 108
Fe-56	100 - 1000	0.2×10^{10}	494 - 150
Au-197	100 - 165	1×10^{7}	4123 - 3066
Sequential Field (Fe/H)	1000	Various	150/0.2
Solar Particle Event	50 - 1000	Various	1.26 - 0.21

The beam used for experimentation at the NSRL facility results in activation of material exposed to it. NSRL operators control all materials irradiated in the NSRL target room as radioactive until released by an RCT. NSRL operators treat samples as radioactive throughout the entire process if they have radioactive tracers such as ^{3}H or ^{14}C added to them as radioactive. For activated liquid samples, there exists a potential for dispersion of radioactive material through spilling during handling or manipulation. These samples have time to decay, after which they again become non-dispersible, and no special radiological handling is required.

NSRL operators determine the correct decay time for a sample to decay to non-dispersible radioactivity status based on the type of beam delivered to the sample (proton or ion) and absorbed dose delivered. All work on the samples can proceed only if workers have the appropriate training. If activated samples need on-site shipment, the NSRL Medical Liaison Scientist plans the movement using Radiological Work Permits and BNL vehicles. Human cells must have “close proximity” double containment during irradiations at NSRL unless listed as Biosafety Level One by a vendor or a cell repository. The most convenient method for this containment has been to place the entire holder in a zip-lock baggy.

Normally, the Target Room ventilates continuously to reduce odors from the biological specimens. The ventilation system maintains the radionuclide concentrations at insignificant values in the Target Room. If the ventilation is off and irradiations and entries are still made, the dose to an individual who spends an hour in the Target Room would be a small fraction of 1 mrem. Thus, there are no significant hazards from loss of Target Room ventilation.

A deeply recessed and well-shielded beam dump exists at the end of the Target Room and it prevents fragment products and backscattered particles from reaching the target during irradiations (Figure 3.3.3.e). There is the potential of significant residual activity in the beam

dump. To work near the beam dump, a movable shield may rolls into place using the remote capabilities. Other features of the Target Room to facilitate safety during the experimental work are the following:

- An entrant goes in through a maze (Figure 3.3.3.f). Therefore, entrance to the room after the completion of irradiation requires only opening of the interlocked safety doors and not heavy shielded doors
- The target holder is positioned by stepping motors controlled by the computer
- Video cameras allow monitoring of the process from outside the Target Room
- The Target Room conveniently connects to the support laboratories

The thick earth berm over the beam dump and Target Room prevents less than 25 mrem per year to an individual outside the facility. C-AD designed the dump and sloping earth berm to stop muons up to 3 GeV in energy, which is the maximum capability of Booster.

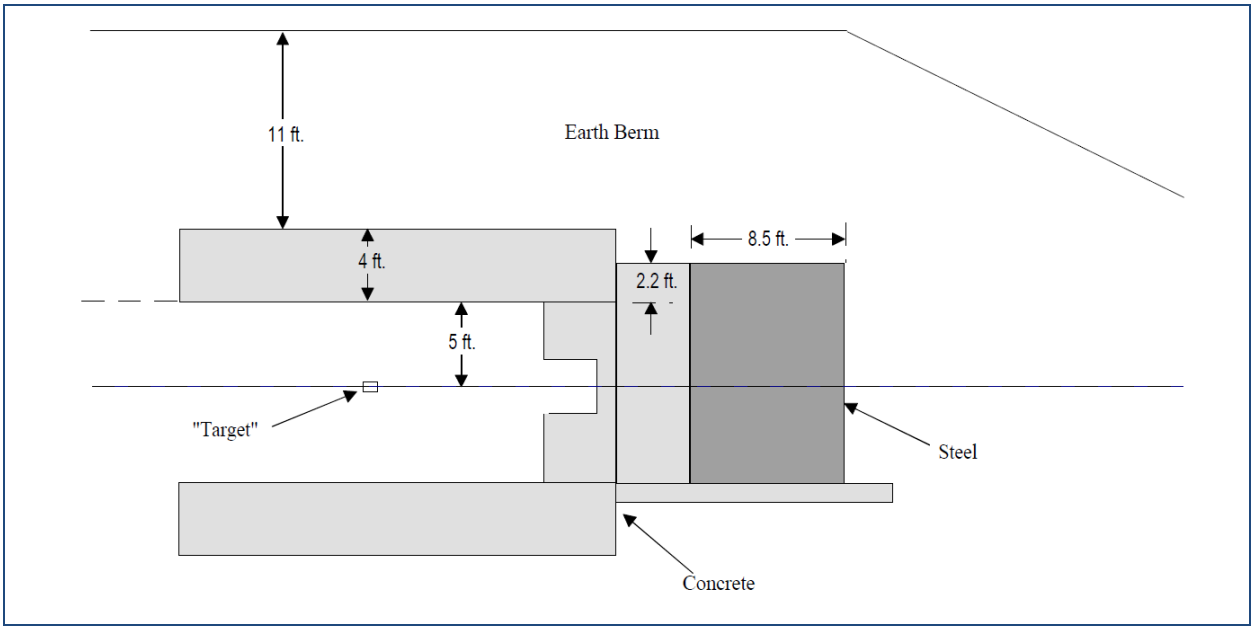

Figure 3.3.3.e Elevation View of NSRL Target Room and Beam Dump

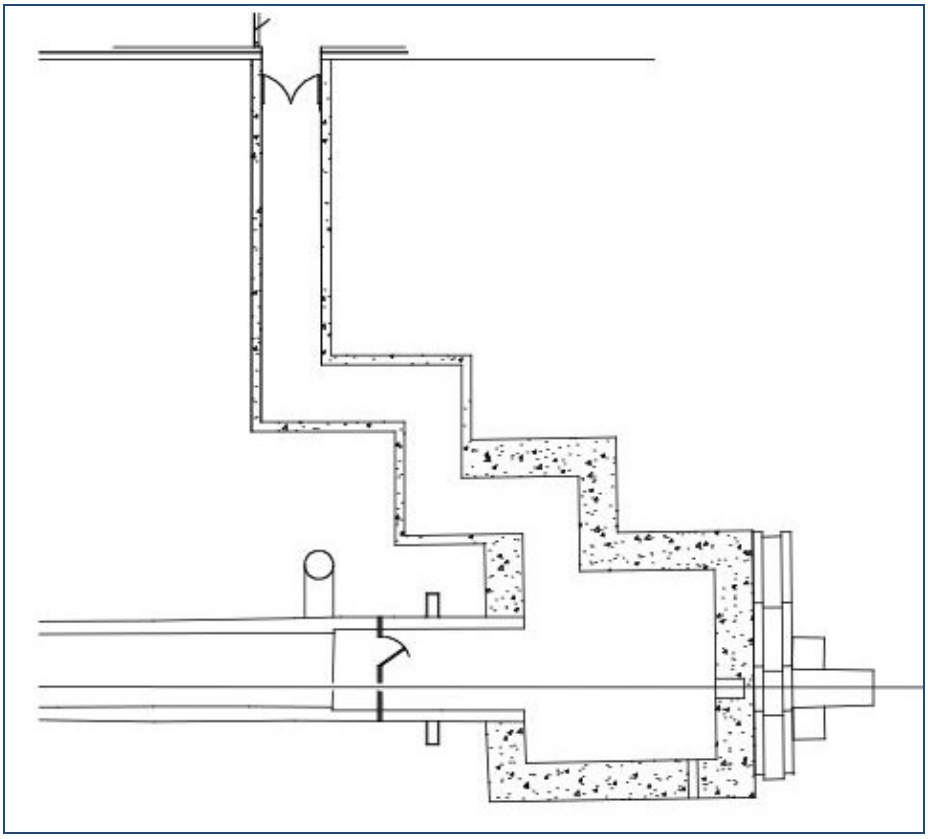

Figure 3.3.3.f NSRL Labyrinth into Target Room

3.3.4.Prototype Energy Recover Linac (ERL)

The ERL's role formerly was to provide electron cooling for present RHIC operations.[18] After stochastic cooling became viable, its role has become to serve as an R&D facility, developing the technology needed for the RHIC Electron Ion Collider (eRHIC) proposal. The eRHIC design aims at polarized 20 GeV electron collisions either with 275 GeV protons or with high-energy heavy ions. The eRHIC design uses the ERL technology for its high electron current, and high-charge electron beam. Table 3.3.4 summarizes the Prototype ERL parameters used for the R&D work.

Figure 3.3.4.a is a schematic layout, and Figure 3.3.4.b is a plan view of the functional areas at the Prototype ERL in Building 912. This Prototype ERL generates and accelerates an intense, 100 mA or greater, electron beam with energy up to about 20 MeV. Energy recovery rests on the fact that the electron beam decelerates to a few MeV before being dumped, and most of its kinetic energy is recovered in an RF field.

A brief description of the Prototype ERL process is as follows:

- A photo-cathode RF gun creates an electron beam

[18] Archival Prototype ERL SAD

- At the exit of the gun, the electron energy is about 2.5 MeV
- The beam is injected into a superconducting RF cavity, and accelerated up to 20 MeV
- The beam is then passed through a “ring” and again enters the RF cavity
- The beam passes into the RF cavity with a 180-degree phase shift relative to the accelerating phase of the cavity, and therefore, the beam is decelerated
- With the beam’s energy reduced to that for electron-gun injection (2.5 MeV), a dipole magnet deflects the circulating beam into the beam dump

Table 3.3.4 Prototype ERL Parameters

ERL Parameter	R&D ERL Design Modes	
	High Current	High Charge
Charge per bunch, nC	0.7	5
Energy maximum/injection, MeV	20/2.5	20/3.0
RMS Energy spread, dE/E	3.5×10^{-3}	1×10^{-2}
RMS Bunch length, ps	18	31
Bunch rep-rate, MHz	700	9.383
Injected/ejected average current, mA	500	50
Linac average current, mA	1000	100
Injected/ejected beam power, MW	1.0	0.150
Numbers of passes	1	1

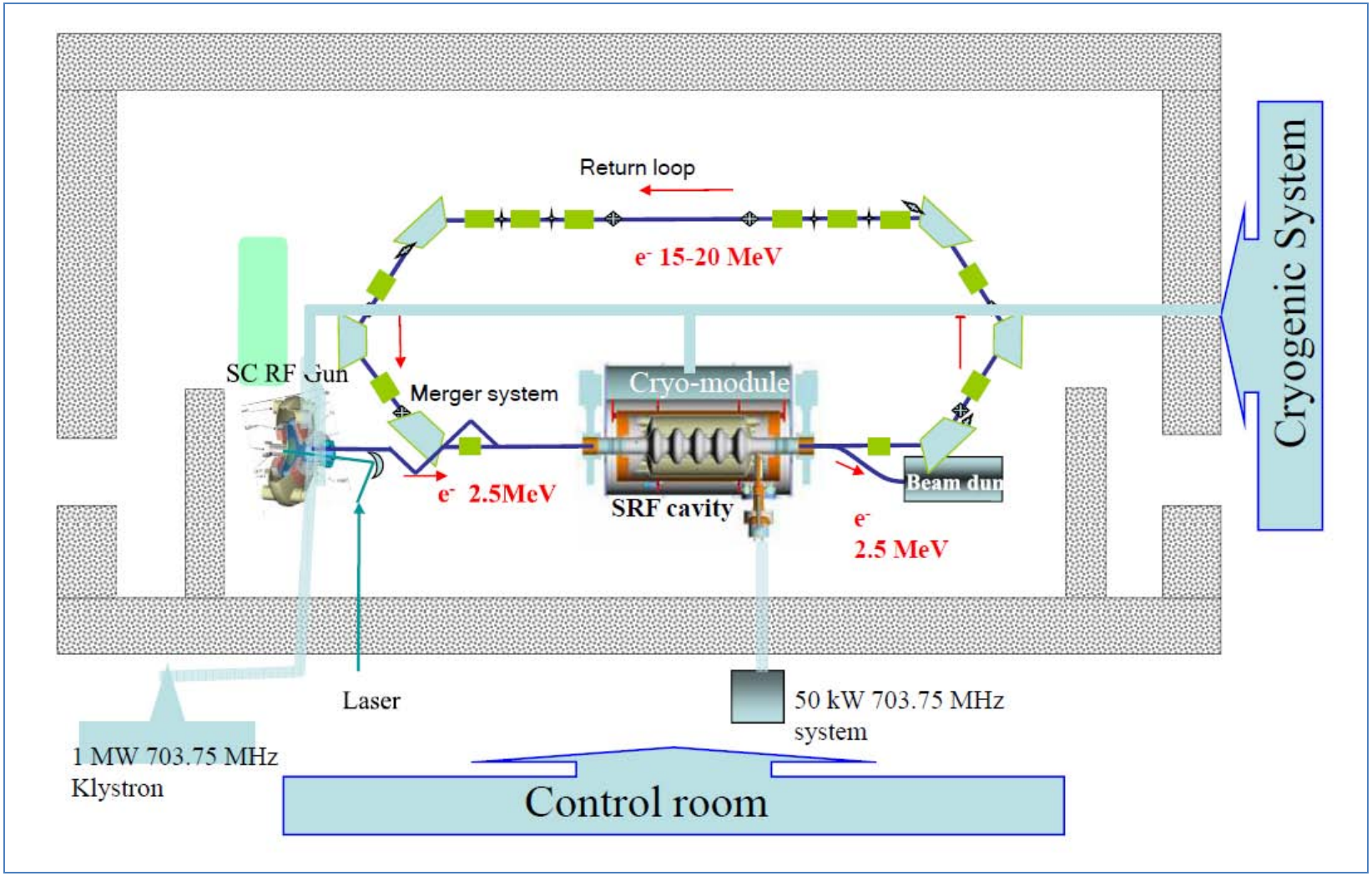

Figure 3.3.4.a Schematic Layout of ERL

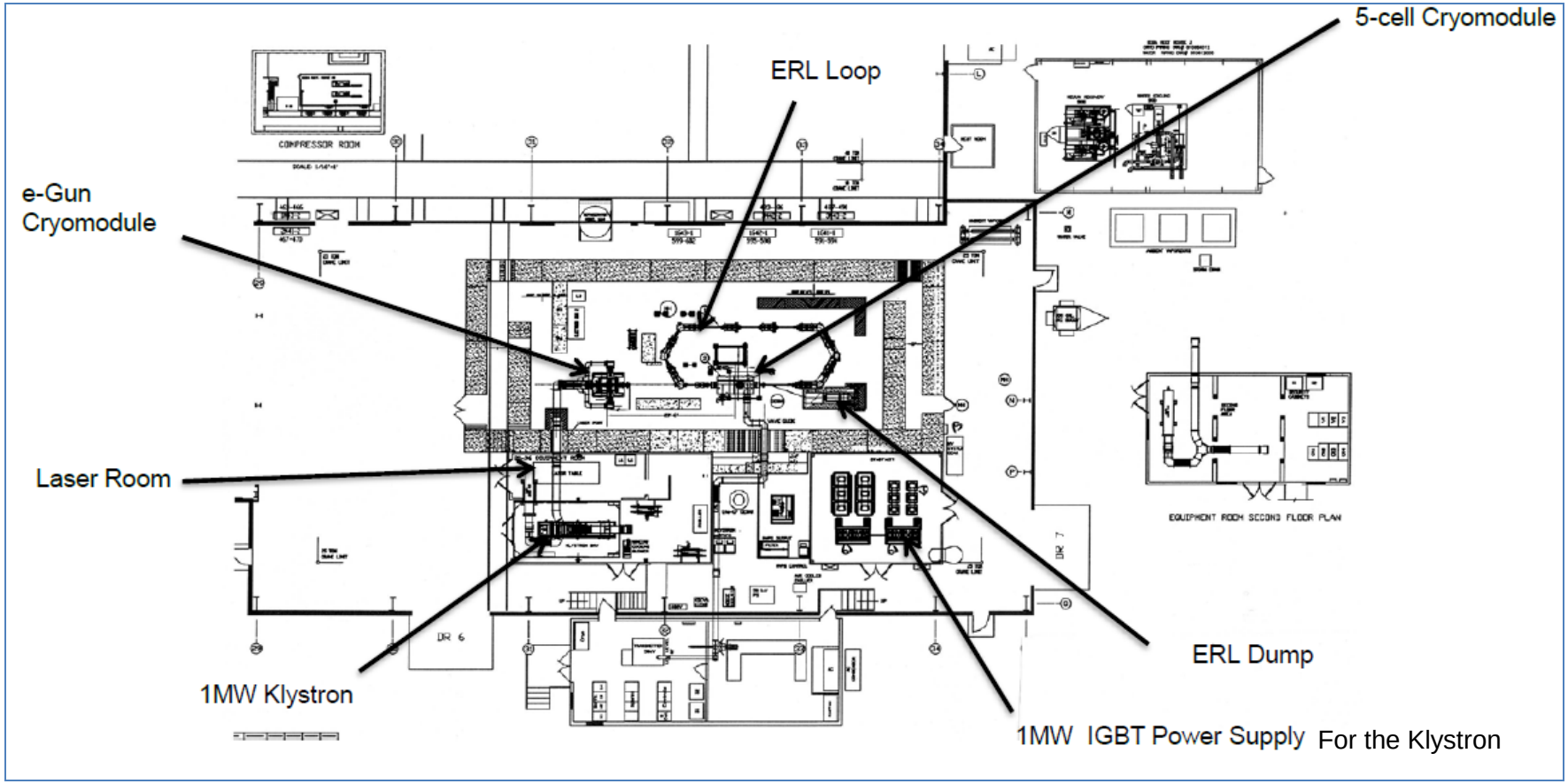

Figure 3.3.4.b ERL General Layout Inside Building 912

The Prototype ERL uses a high-brightness RF superconducting electron-injector. The microwave power used to accelerate electrons in this injector is provided to a niobium cavity by a 1.0 MW RF klystron, and delivered via two 500 kW fundamental power couplers at a frequency of 703.75 MHz. The RF superconducting electron-injector accelerates electrons up to 2.5 MeV.

As niobium is a superconductor at liquid-helium temperatures, surface resistance effectively is zero. Microwave power-feeds to the cavity deliver almost all RF to accelerate electrons, as opposed to heating the niobium wall, allowing the generation of a 0.5-ampere average-current electron-beam. This means that the 1.0 MW RF power can deliver an electron beam to the ERL loop with minimal power dissipated to the liquid helium bath. During start-up and conditioning, dark current[19] exists in the injector, and this hazard may produce x-rays; however, the accelerator's enclosure adequately shields this radiation. C-AD does not allow access to the accelerator enclosure whenever the RF system is operating.

The cavity cools to superconducting temperatures using 4 K liquid helium provided via an external Dewar system to the cryostat or an internal helium Dewar. A large vacuum pump reduces the pressure over the liquid helium bath, and this lowers its temperature to 2 K, the desired operating temperature.

A Class IV laser system irradiates a multi-alkali (CsK_2Sb) photocathode, releasing electrons; the laser has a maximum repetition rate of 9.4 MHz producing ~5 W of power in 7 ps pulses at 355 nm. The system consists of an oscillator locked to a master RF clock that drives the cavity, followed by a series of amplifier stages, pulse shaper/selectors, and harmonic crystals. The laser beam transports to the photocathode in enclosed beam pipes. The laser power is low for initial alignment and increases gradually to full power. Operators use a written procedure for alignment, as per the BNL Subject Area.

The superconducting 5-cell cryomodule is an assembly that accelerates the beam from the electron injector to full energy in the ERL loop. The 5-cell's main element is a niobium structure called a cavity. In this device, five cells comprising the niobium cavity create a repeating pattern of the electromagnetic field so to assure efficient acceleration. When cooled to the temperature of liquid helium, the niobium cavity becomes a superconductor, reducing the microwave losses so that high electric fields (up to 20 MV/m) can be set up in the cavity using tens of watts of RF power. Naturally, such high fields can lead to hazardous acceleration of electrons over short distances. These fields cause field emission of electrons from the surfaces of the cryomodule; the electrons accelerate to various energies by these fields until they stop in the cavity wall, so producing x-rays.

Figure 3.3.4.c shows the details of the cryomodule, which is representative of systems that have a non-ASME-stamped pressure vessel and entail oxygen-deficiency hazards. A titanium-helium vessel encloses the 5-cell niobium cavity assembly. The cavity is equipped with a tuner, fundamental power coupler, and beam pipes for bringing the electron beam into and out of the cavity. The beam pipes also serve as conduits for the non-fundamental microwave power generated by the beam passing through the cavity; this power escapes the cavity due to the doorknob shape of its end pieces and dissipates as heat in ferrite assemblies outside, and on

[19] Dark current – relatively small current that flows through a photosensitive device even when no photons are entering it.

either side of the cryomodule. Liquid helium maintains the cavity's temperature by entering the helium vessel through a 2 K main line. A vacuum vessel, equipped with a thermal shield, encloses the cavity system so reducing cryogenic losses. The vacuum vessel is a metal envelope and the thermal shield is Multi-Layer Insulation. Additionally, two magnetic shields enclose the cavity to maintain a low ambient magnetic field during cool down.

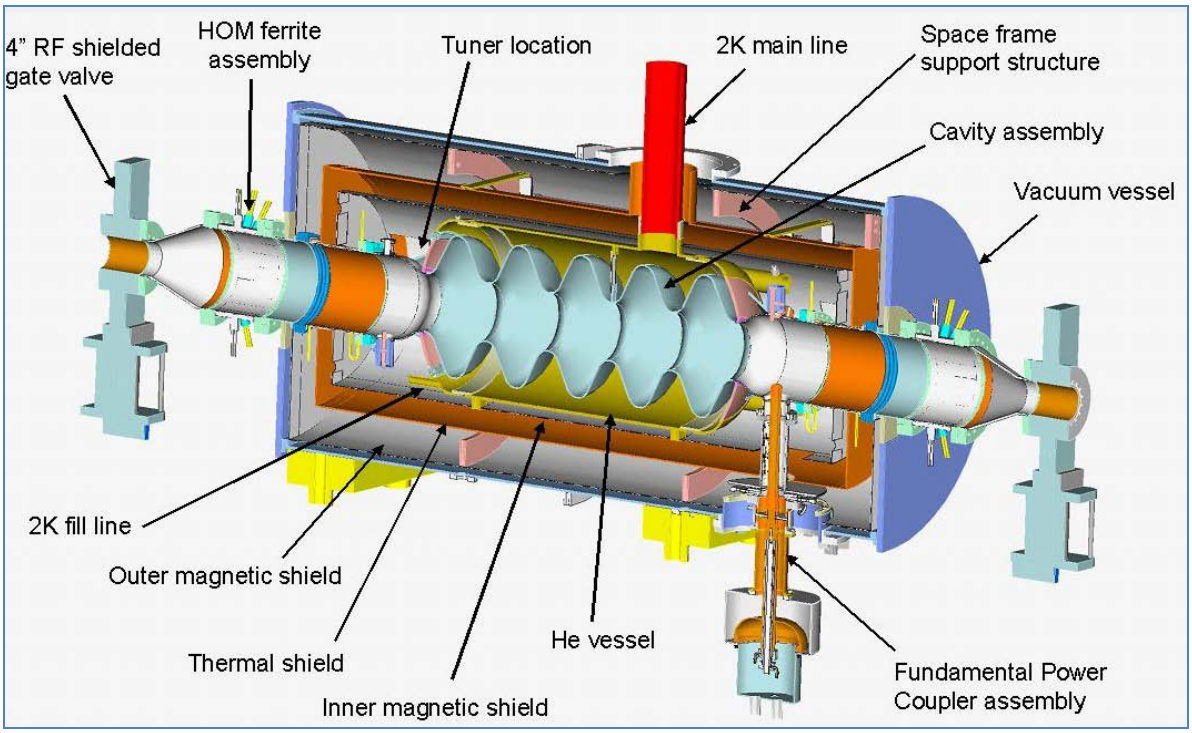

Figure 3.3.4.c Superconducting Linac Cryo Module Assembly for ERL

BNL's Pressure and Cryogenic Safety Subcommittee (PCSS) reviewed and approved all non-ASME-stamped pressure vessels in cryogenic systems at ERL.[20] Specifically, the ERL 5-cell cavity was determined to be a vacuum-rated pressure vessel that has the following equivalent protections to an ASME stamp:

- Design drawings, sketches, and calculations reviewed and approved by the PCSS
- Qualified personnel examined and inspected materials, in-process fabrications, non-destructive tests, and acceptance tests
- Documentation, traceability, and accountability for the vessel including descriptions of its design, pressure conditions, testing, and inspection
- Burst disks on associated vacuum spaces that can be backfill pressurized

A 50 kW continuous wave Input Output Controller provides microwave power to accelerate electrons in the 5-cell cryomodule, which operates at a frequency of 703.75 MHz. The

[20] Laboratory ESH Committee and PCSS Minutes

cavity resonates with microwave power fed through a port called the fundamental power-coupler assembly.

C-AD prevents exposure of personnel to non-ionizing RF radiation generated by the klystrons. People cannot be near the 1 MW klystron source during operations due to a coordinated key system preventing access to its enclosure, nor can they be near the RF power at the load since it is inside the accelerator enclosure. The ERL Access Control System (ACS) prevents inadvertent exposure by interlocking the RF power off if there is an unauthorized entry to the enclosure during operations. A waveguide encloses the RF radiation between the klystron and accelerator structures. The vacuum enclosure of the klystron and accelerator structures, outside the waveguide, confines the RF radiation, which provides a redundant safety-protection feature near the load or near the source. A break in the vacuum integrity in either of these would remove the insulation required to continue generating RF power. Surveys of the RF radiation not contained within the system's waveguides confirm that ambient RF radiation is within the limits defined by the American Conference of Governmental Industrial Hygienists (ACGIH) and OSHA.

The 5-cm thick steel shielded room housing the tube and tube base prevents the emission of x-rays due to Bremsstrahlung from the 1 MW RF klystron.

In addition to a liquid-nitrogen storage vessel and a helium-compressor room, the ERL cryogenic systems include

- Liquid-helium storage volume mounted above the 5-cell cavity; it provides operational time at 2 K for the cavity
- Vacuum pump for sub cooling the boiling liquid-helium
- Ambient-temperature piping associated with the Prototype ERL cryogenic system
- Cryogenic transfer lines to supply liquid helium to the 5-cell cavity
- Pressure and temperature instrumentation
- Vacuum pump to maintain insulating vacuums
- Properly sized relief valves and burst disks

The vacuum systems consist of stainless steel and aluminum vacuum chambers and beam pipes, high-vacuum pumps, vacuum gauges, and Programmable Logic Controllers (PLC).

The Prototype ERL magnet systems consist of dipole magnets that force the electrons to move in a circle or arc, and quadrupole magnets that act like a lens, focusing the electrons to the center of the beam pipe. The Prototype ERL magnet systems include 4 injection-line dipoles, 1 dump magnet, and the ring magnets. The ring magnets include 25 quadrupoles and 6 dipoles.

The electrical power for the accelerator is 480 volts AC, 3 phases with a high-resistance grounded delta-system. The equipment that requires the 480 V AC line voltage input includes ring magnet, dump magnet, and injection-line magnet power supplies. The magnet's electrical systems include the DC cable for these power supplies. The installation and operation of the power-distribution system and the magnet's electrical system conforms to standard industrial practice for this type of equipment. At the C-AD, this includes a remote, alarming ground-fault monitoring system.

The beam dump is where electron bunches end up while depositing energy unrecovered by the 5-cell cavity. The beam spreads out, by magnetic field coils, over the surface of a water-cooled, cylindrically shaped copper electron-beam dump, roughly 1.6-m long and 0.5-m

diameter. Spreading the beam over this large area prevents local boiling of the beam dump's cooling water.

Beam instrumentation includes position monitors, current monitors, profile monitors, and loss monitors. With the exception of loss monitors, all sensors are integral to the vacuum's envelope. None of them interfaces with the personnel-protection system. The beam-loss monitors connect with the machine-protection system, as do the current monitors.

With only 50 kW microwave power making up RF losses in the cavity, the 5-cell cavity can accelerate one bunch without it experiencing a drop in voltage. The energy in the cavity's electric field recovers when the one accelerated bunch returns to the cavity 180° out-of-phase; then, the bunch loses most of its kinetic energy, which transforms into energy stored in the electric field, and the low-energy bunch moves to the dump. The electric field in the 5-cell cavity then can accelerate a new bunch.

The bunch that lost energy to the cavity spreads across the face of the beam dump to prevent thermal hotspots. A monitoring system and verifies proper operation and spread as input to the fast-beam permit system; that is, a fast-beam permit system generates a signal to stop beam if the beam fails to spread over the face of the dump. Additionally, monitors for vacuum, beam-loss, and water-cooling inhibit the fast-beam permit system when needed.

Conventional facilities service the needs of the Prototype ERL with building space, HVAC, cooling water, electric power, cable tray, radiation shielding, fire detection, and cranes. Located inside the Northeast Building Addition (NEBA) section of Building 912 is the 4-foot thick concrete "Block House", the Klystron Power Supply Building and a 2-story equipment building. BNL rigging crews open and close the roof of the Block House to install or remove large pieces of experimental equipment. The equipment building houses security-, vacuum-, and cryogenic-control systems, magnet power- supplies, a laser room, and the Klystron. Outside the NEBA are the Experimental Control Room, two equipment buildings, and Building 966 with office and workspace.

The cooling tower has more than enough capacity to remove heat generated by all Prototype ERL operations. The manufacturer rated the expansion tanks for 150 psi; they are located on the low-pressure side of the cooling-water system, which is at about 20 psi. An ASME stamp is not required since the water pressure is less than 300 psi and the water temperature is below 210 ^{o}F. The design and testing of the expansion tanks conforms to the ASME Code even though they are not stamped.

3.3.5.Accelerator R&D Facility in Building 912

The main structures in the Accelerator R&D Facility in Building 912 include the Vertical Test Facility (VTF), the Little Block House (LBH), the mezzanine, the technical work center, the clean room, the cryomodule assembly area, and the cryogenic refrigeration plant.

The VTF is the main cryogenic test Dewar for testing SRF cavities at 2- to 4-K. BNL's Pressure and Cryogenic Safety Subcommittee (PCSS) evaluated the Dewar.[21] The C-AD Accelerator Systems Safety Review Committee (ASSRC) and the C-AD Radiation Safety

[21] Laboratory ESH Committee Records at http://www.c-ad.bnl.gov/LESHC/past_leshc_business.htm

Committee (RSC) evaluated the block structure enclosing the Dewar.[22] During cavity tests, a Personnel Access Safety System (PASS) system limits the ability to apply RF power to the cavity. The main hazards present in the VTF are cryogenic temperatures, oxygen deficiency, ionizing radiation and electrical shock.

The LBH is a multi-purpose SRF cavity-test facility designed for use with a smaller test Dewar holding 100- to 200-liters of liquid helium. The LBH has similar hazards to the VTF. The RSC and ASSRC committees evaluated the facility and a PASS system limits access when hazards are present.[23]

The mezzanine provides a clean space for tasks related to the SRF cavity. The control room is located under the mezzanine as well as the door for the 800 °C vacuum-oven used to heat-treat the SRF cavities. The mezzanine has vinyl-strip curtains as well as HEPA filters to assure a clean working environment. A portable class-100 clean room under the mezzanine serves as a clean location for assembling SRF cavities.

The 56-MHz cryomodule will be cold-tested in Building 912 near the mezzanine area. The C-AD will install the completed cryomodule in a temporary blockhouse for a batch-cold-test at 4 K. A 1 kW RF amplifier will power the cavity within the cryomodule and cavity components, including the tuner, the high-order mode and fundamental mode dampers, and fundamental power coupler will be tested for performance compliance. Table 3.3.5 lists the 56 MHz cryomodule cold-test parameters.

Table 3.3.5 56-MHz Cryomodule Cold Test Parameters

Cavity gap voltage, MV	2.0
Cavity intrinsic quality factor Q_0	$> 3\times10^9$
RF power dissipation at 4 K, W	< 30
Fundamental power coupler Q_{ext}	4×10^7
Cryomodule static heat loss, W	< 15
Lorentz force detuning, Hz	132
Mechanical tuner (stepper motor) range, kHz	25.5
Piezo tuner range, Hz	60

The technical work center is a working space for mechanically assembling the cryomodule and cavity components. ERL personnel have a small machine shop area located there, as well as an overhead crane for moving components and equipment. The work center has HVAC and an installed modular building with sprinkler tie-ins.

The clean room is a fixed wall, Class 100/10, for SRF cavity assembly work and for cryomodule hermetic-string assembly. The clean room is a prefabricated structure installed by the manufacturer, and has a gowning area and pass-thru area. The clean room has HVAC and sprinkler tie-ins.

[22] C-AD Safety Committees
[23] Safety Review Documents for Polarized SRF Gun Experiment

The cryomodule assembly area is where technicians assemble complete SRF cavity cryomodules for a medium-energy or high-energy eRHIC. The vendor installed this modular building, which is equipped with an HVAC system and sprinkler tie-ins.

The cryogenic refrigeration plant is the heart of the cryogenic supply for the ERL, VTF, and LBH. The refrigerator is recycled from the former g-2 experiment as is some other equipment at the Accelerator R&D Facility. The system consists of a 3500 L liquid He Dewar along with a refrigerator able to handle a 300-Watt heat load. Figure 3.3.5.a shows the layout of the Accelerator R&D Facility in Building 912. Figure 3.3.5.b shows a more detailed layout of the VTF and its retractable roof enclosure.

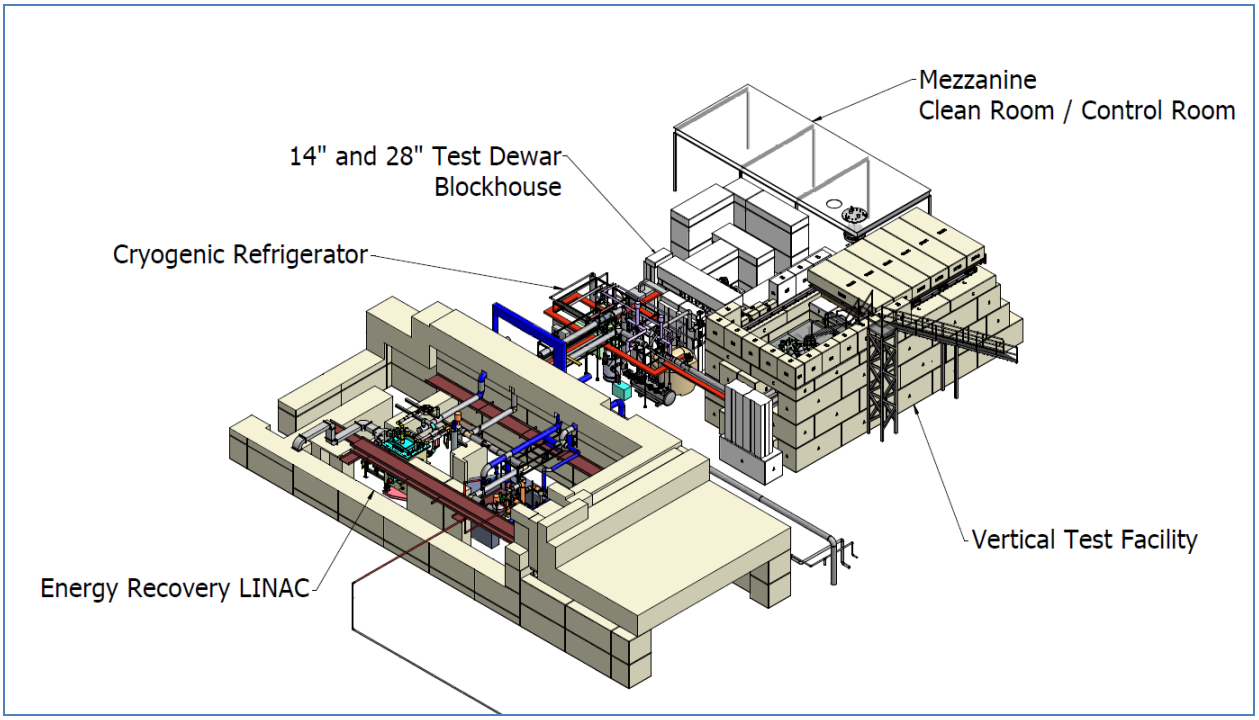

Figure 3.3.5.a Layout of Accelerator R&D Facility in Building 912

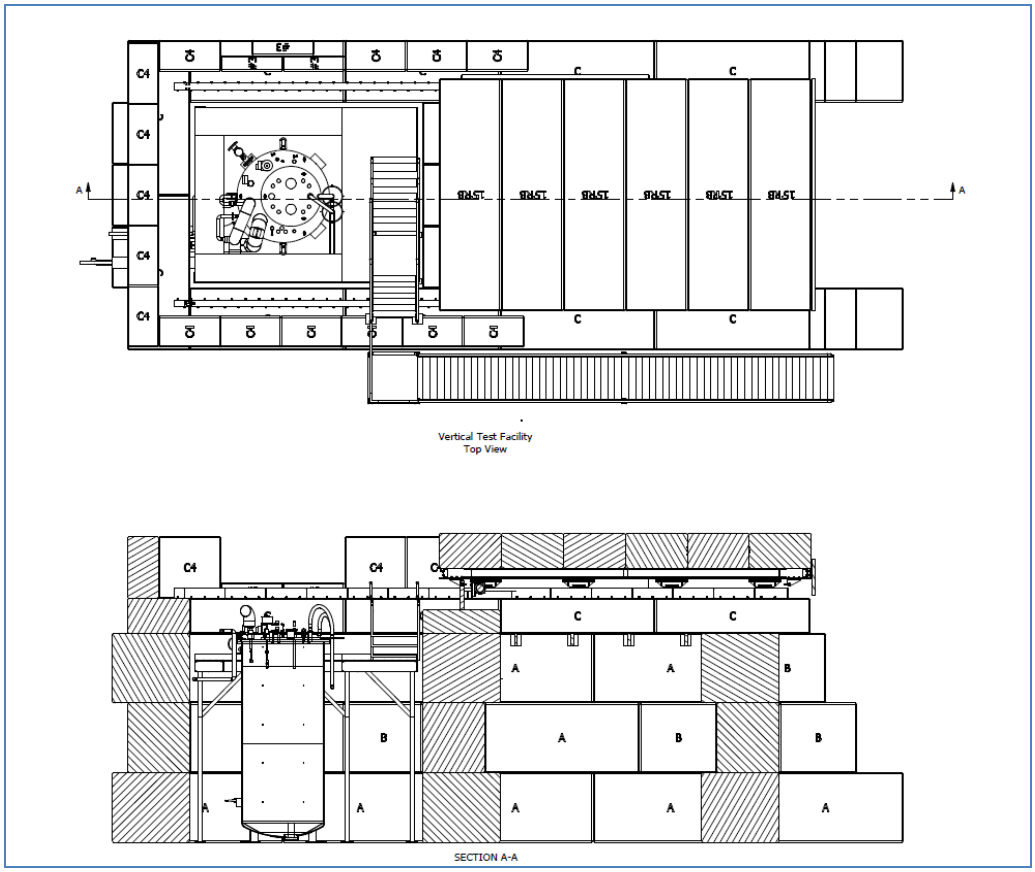

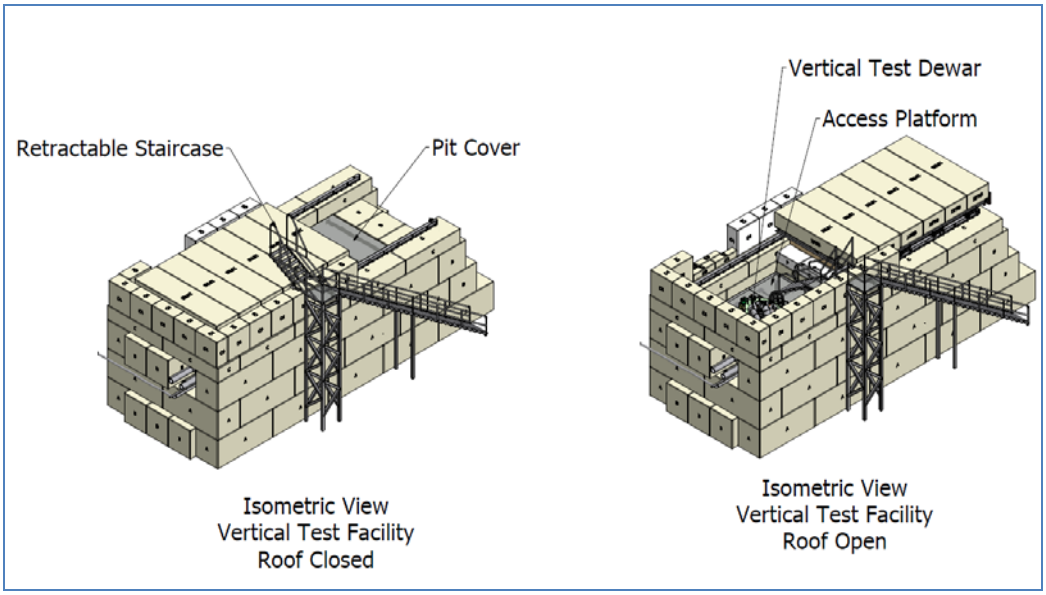

Figure 3.3.5.b Detailed Layout of Vertical Test Facility in Building 912

3.3.5.1.Gatling Gun Test Area in Building 912

The Gatling gun test area is a temporary clean enclosure offering a controlled environment for assembling, servicing, and testing the Gatling XHV gun's components and subsystems, and for testing and characterizing the overall system. The area encompasses three compartments comprising a floor space of 130 m^2 in Building 912. Compartment A is a high-bay space of 70 m^2 of floor space, its ceiling has a minimum height of 17 ft, and it has a temperature control of ±1 ^oC and humidity control of 40- to 45-%. Chamber A has a common ceiling plenum, an HVAC system, and an air-handling HEPA filter system that circulates air within compartment at a positive pressure of 2 to 5 cm of water column. Compartment A primarily houses the overall e-gun assembly, cathode-preparation chamber, cathode-transfer line, energy-recovery beam stop, high-voltage gun power supply, and electronic controls for gun chamber's vacuum.

Compartment B houses the photocathode Laser source, and the laser sub- and support-systems. Compartment C is for servicing and subassembly of the XHV system's components. Compartments B and C have 8 ft ceilings with a common ceiling plenum and are a class-1000 clean space. The air-handler system maintains a positive pressure of 7- to 10-cm of water column. Doors between chamber B and chambers C and A are laser-interlocked. Compartment A has an A-frame style crane, and a 2-ton capacity hoist.

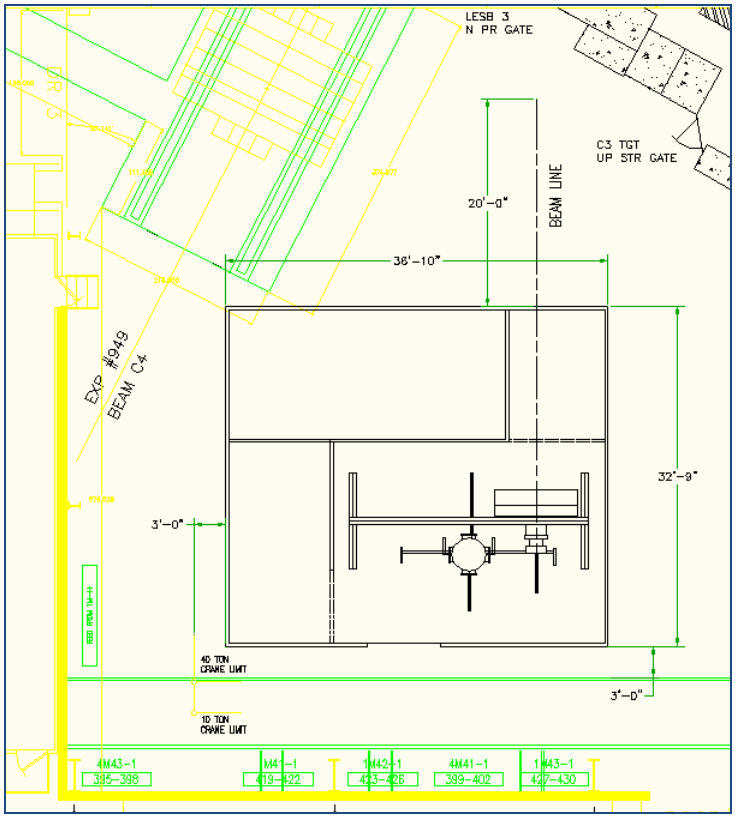

Figure 3.3.5.1 Gatling Gun Test Area in Building 912

3.3.5.2.The R&D Cathode Development Lab in Building 966

The R&D cathode development lab is located in Building 966, adjacent to Building 912. Its purpose is to provide a place to study and produce robust, high-yield multi-alkali photo-cathodes and study methods of transporting them for insertion into a superconducting RF electron gun. When researchers insert the cathode into the SRF electron gun, they are successful if they maintain sufficient quantum-efficiency of the cathode. One important element in producing a multi-alkali photocathode is the strict vacuum requirement of 10^{-11} torr. Researchers need to assure success in producing long-lived photo-cathodes whose quantum efficiency (QE) or lifetime does not deplete due to residual gas poisoning in a poor vacuum. Strict vacuum requires following specific design criteria, and design principles.

The R&D cathode development lab supports studies of how to install, remove, rejuvenate, and replace a cathode without exposing the source or cathode to the atmosphere. The R&D personnel have a system that allows the deposition of Cs, K, and Sb on the surface of a cathode tip at pressures in the 10^{-10} to 10^{-9} torr range. The C-AD controls the use of these hazardous materials by following the requirements in the SBMS.

The R&D also studies transport of theses cathodes by designing a cart to allow mobility with the ability to negotiate the ERL's facility labyrinth.

Currently, the C-AD uses a third-generation multi-alkali photocathode deposition system (Fig. 3.3.5.2) built by Advanced Energy Systems (AES). Deposition occurs horizontally on fixed arms, a change from the past two systems. This system also addresses the interface to the 703.75 MHz SRF Gun, using the transporter cart. The transport cart (Figure 3.3.5.2) has two vacuum crosses separated by a long stroke bellows, and has adequate pumping with an expected base pressure of 10^{-10} torr or better after bake-out. It is an all-metal construction, including valves. All valves withstand bake-out to 250 ^{0}C. The use of two transport carts assures a quick turn-around when changing a cathode out of the injector, or while carrying out photocathode R&D while the ERL is operational.

Figure 3.3.5.2 Photocathode Deposition System (Right Front), and Cathode Transport Cart under Vacuum Backing (Left Back)

3.3.6.Brookhaven Linac Isotope Producer (BLIP)

The BLIP is located past the end of the 200-MeV Linac (Figure 3.3.6.a). BNL transferred the BLIP from the Medical Department to the C-AD on October 1, 2010. At the end of the BLIP branch of the Linac tunnel is a physical boundary between the Linac and BLIP; that is, a concrete wall separates the Linac tunnel from the BLIP's secondary containment tank (Figure 3.3.6.b).

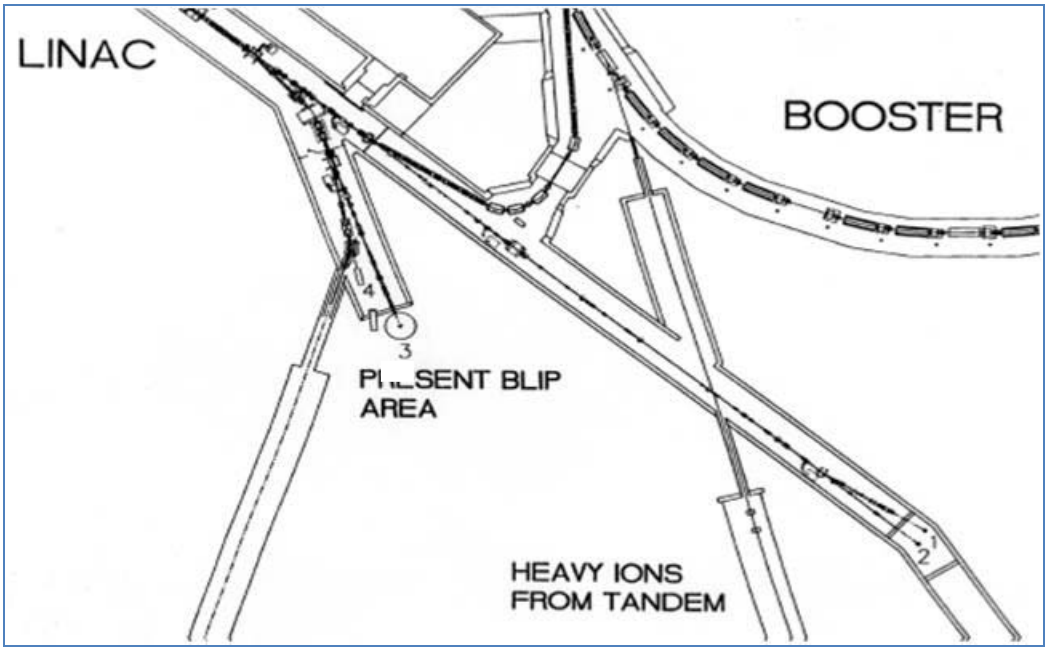

Figure 3.3.6.a Location of BLIP Facility

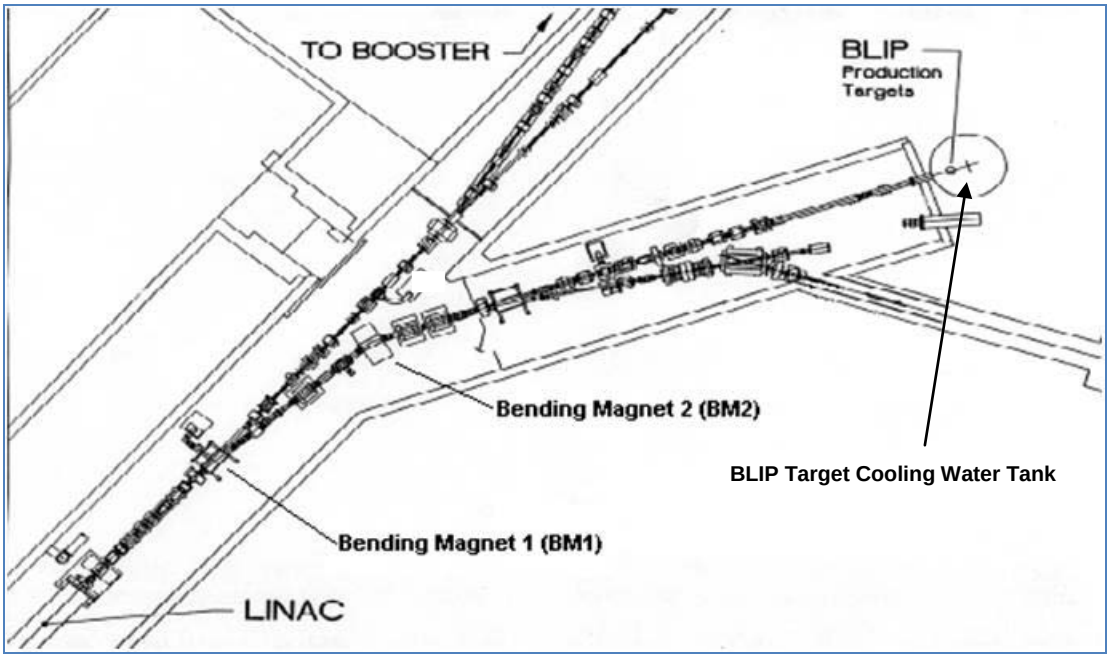

Figure 3.3.6.b Linac Beam Line to BLIP and BLIP Target Tank

The potential for an off-site radiological incident at the BLIP Target Cooling Water Tank due to seismological- or meteorological-phenomena is very low. BNL and the DOE's BHSO concluded the same, and documented the low-risk character of the BLIP facility and its operations in 1998 and in 1999.[24, 25]

The BLIP facility is a three-room building situated on an engineered hill. The operations area, room B, contains the Target Cooling Water Tank and the Hot Cell. The control room, room A, contains the operations console and process-control instrumentation. The garage, room C, provides enclosed access between the other rooms, garage space for a forklift, and materials storage. A liquid radioactive-waste storage tank is located beneath the floor of room C. The BLIP Building 931 layout in Fig. 3.3.6.c shows these rooms.

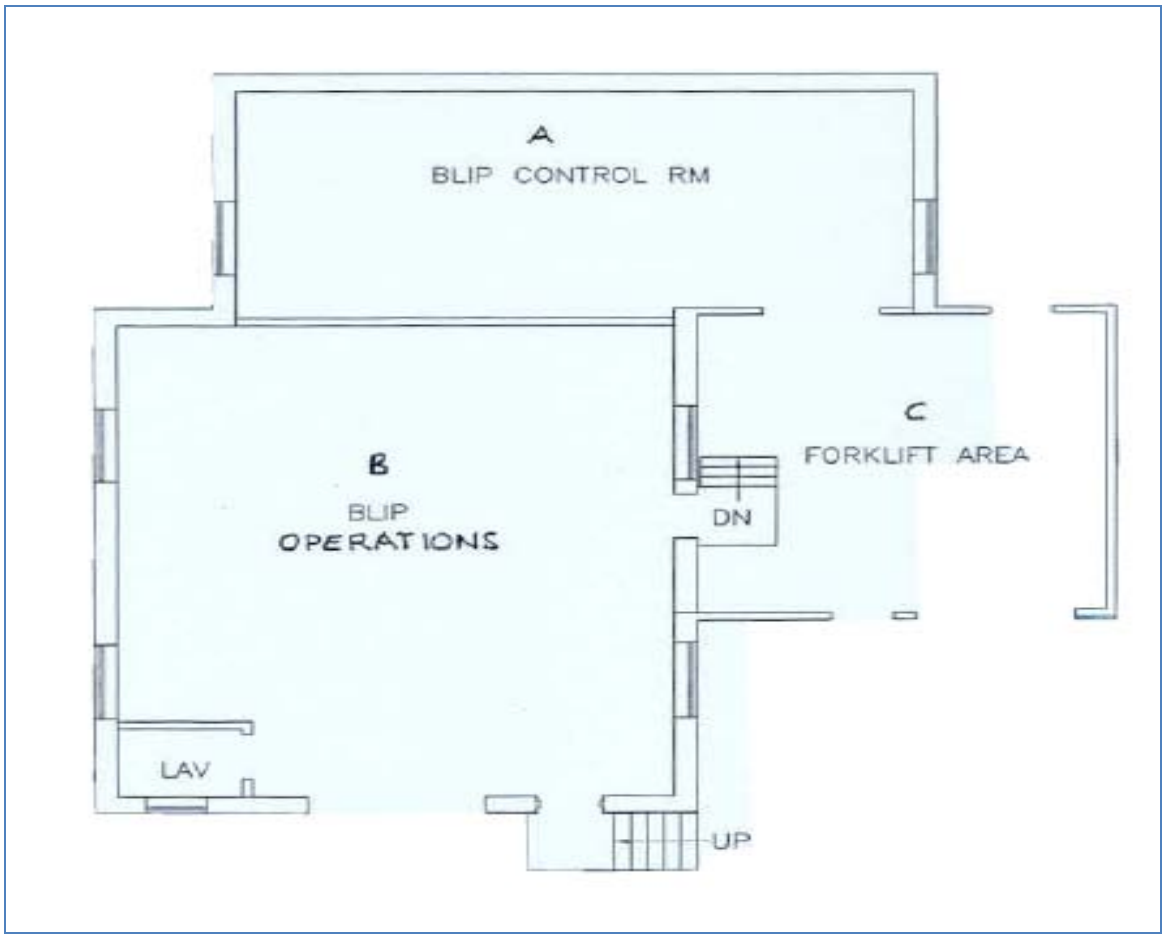

Figure 3.3.6.c BLIP Building 931 Layout

The Linac directs a proton beam up to 200 MeV through an evacuated beam pipe to the BLIP by a pulsed bending magnet (BM1) just downstream of the last Linac accelerating tank;

[24] Facility Hazard Categorization Review for BLIP, December 1999
[25] Facility Hazard Categorization Review for BLIP, August 1998

this, in turn, directs the beam to another DC dipole magnet (BM2), and thence to the beam line leading to the BLIP targets (Figure 3.3.6.b). The C-AD operators manually shut off the beam to BLIP targets using these bending magnets, or as part of the automatic shutdown of BLIP in an abnormal situation. The remaining bending- and focusing-magnets in the Linac's beam-line-to-BLIP control the position and shape of the beam as it hits the target. A 2.4 m-long vacuum-transport tube assembly exists between the end of the beam-line-to-BLIP and the Target Cooling Water Tank. Vacuum windows isolate BLIP from a direct vacuum-connection to the Linac.

The targets to be irradiated are near the bottom of the Target Cooling Water Tank that consists of a stainless-steel shield tank, enclosing several other tubes and shafts. The shield tank is about 2.4 m in diameter and 9.5 m high and it formerly served as a shield water-tank for the original BLIP design. Figure 3.3.6.d shows the Target Cooling Water Tank Cross Section.

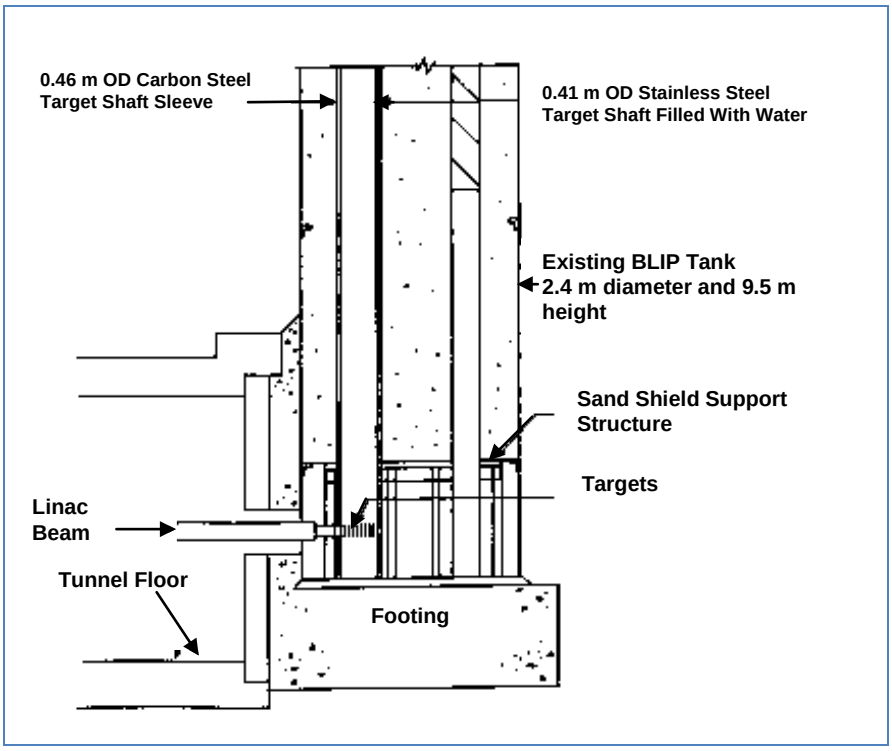

Figure 3.3.6.d BLIP Target Cooling Water Tank Cross Section

A 0.4 m stainless steel tube or target shaft within the Target Cooling Water Tank rests on the bottom. The target shaft extends 1 m above the BLIP floor, inside a Hot Cell. The target shaft has a removable stainless-steel window at the level of the beam, allowing protons to hit the targets. Also enclosed in the shield tank are a support table, a 0.46 m carbon-steel shaft, which is the target-shaft's sleeve, and a 0.3 m carbon-steel tube, which is the inspection plug shaft. The former, which extends from the top of the support table to a point 3.7 m below the top of the shield tank, is concentric to the target shaft, and formerly served to keep shielding sand away from the target shaft (Figure 3.3.6.e Top of BLIP Tank Cross Section). Sealing the space at the top of the target shaft and the target-shaft sleeve is a 0.05 m thick, 0.3 m high, steel collar

attached to the target shaft, and overlapping the target shaft sleeve. Filling the shield tank volume above the sand-shield table are layers of sand, steel shot, and polyethylene beads providing protection from beta-, gamma-, and neutron-radiation. The inspection plug shaft contains four removable concrete plugs, totaling 4.8 m in length. The inspection shaft allows visual- and instrumentation-access to the area beneath the support table, and shielding. The BLIP's Target Cooling Water Tank and installed water-leak sensors together conform to Suffolk County Article 12 Sanitary Code requirements for an underground storage-tank.

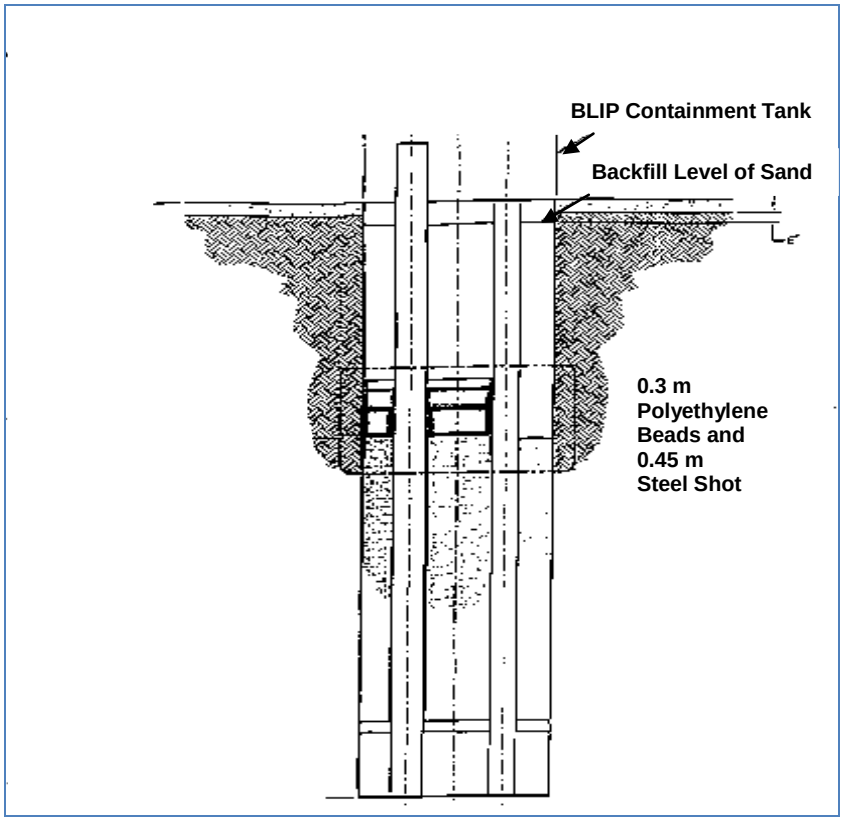

Figure 3.3.6.e Top of BLIP Tank Cross Section

The floor of the BLIP building is at the level of the top of the shield tank. Figure 3.3.6.f shows a Hot Cell, 2.1 m wide, 0.91 m long, and 2.2 m high, located directly above the shield tank. Its walls are 1.27 cm thick steel plates, separated by a space of 15 cm filled with lead, while the ceiling panels have 10 cm of lead poured between similar steel plates. Lead glass windows allow viewing operations inside the Hot Cell. Operators perform tasks in the cell using remote manipulators wherever possible. The target shaft and Hot Cell house the transport-drive mechanism by which operators lower targets to and raise from the beam-line's level. This mechanism is a motorized chain-and-trolley design. Water cools the targets and provides additional radiation shielding. The underside of the Hot Cell table seals and covers the shaft opening. The Hot Cell table is the working surface inside the Hot Cell. A Plexiglas and aluminum housing encloses the target-transport's drive mechanism on the inside of the Hot Cell,

between the table's top and Hot Cell's ceiling. This housing further reduces evaporation of cooling water to the Hot Cell air, and thus reduces radioactive airborne emissions. Radiological Control Technicians monitor physical access to the Hot Cell.

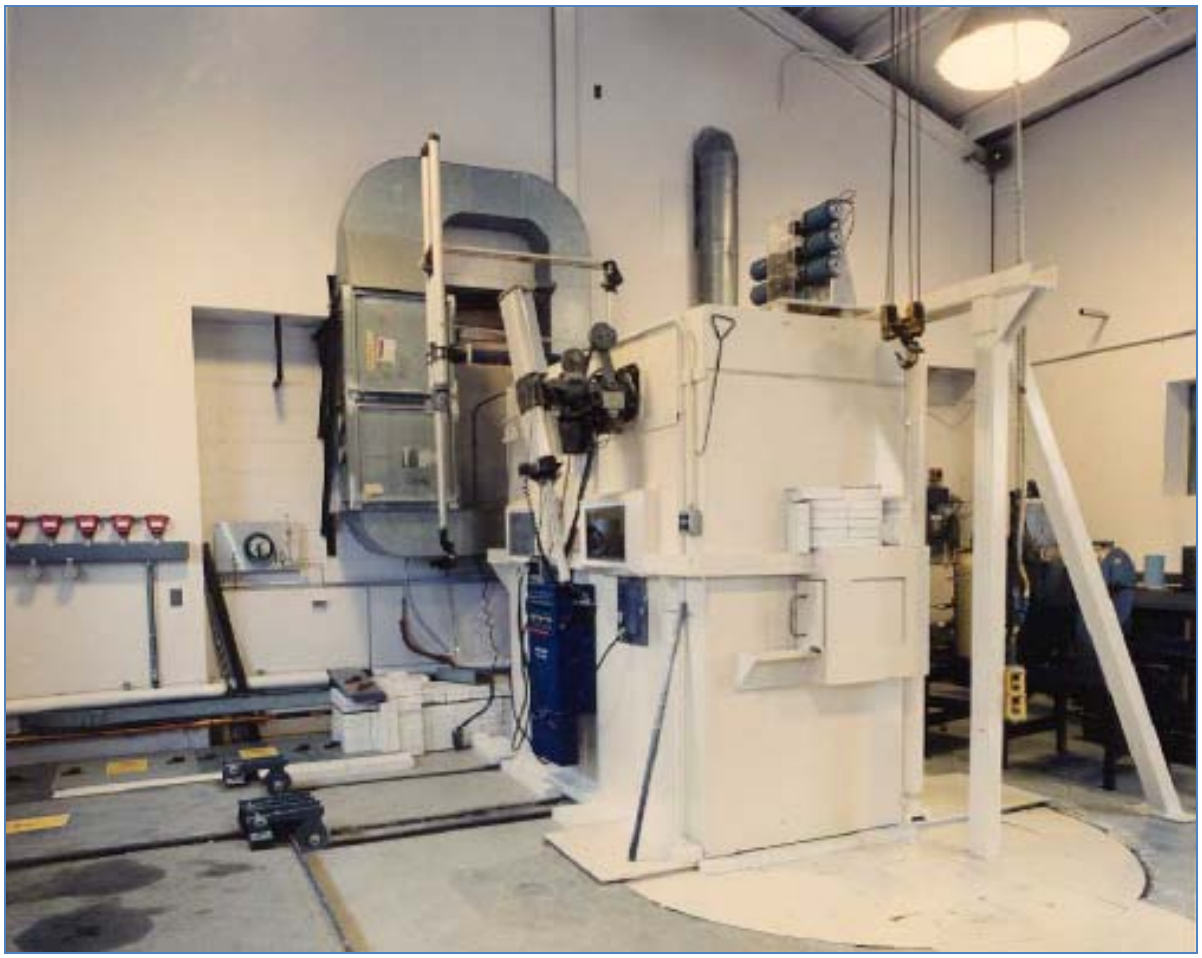

Figure 3.3.6.f Top of BLIP Tank with Hot Cell

For background on the BLIP targets, Table 3.3.6 lists target materials and claddings irradiated at BLIP without significant incident. New target and cladding materials undergo a safety review through the C-AD's RSC. There have never been significant target failures; however, minor leaks occurred, for example due to pinholes or weld cracks. The impact of such problems is programmatic and has no safety consequence. Standard operating procedures address appropriate response to minor leaks. Documentation on fabrication- and irradiation-conditions for every target is controlled and maintained. In most cases, design drawings exist, with all recent ones in the last ten years stored in the C-AD document system in the D-25M file set.

Table 3.3.6 BLIP Target List

Isotope	**Target Material**	**Cladding material**
Be-7	water	none
Na-22	Al	stainless steel
Mg-28	KCl	stainless steel
Sc-47	Ti	stainless steel
Fe-52	Ni	stainless steel
Fe-52	Mn	stainless steel
Co-55	Ni	stainless steel
Co-57	Ni-58	stainless steel
Zn-65	Ga	Nb
Fe-60	Ni	stainless steel
Cu-67	ZnO	stainless steel
Cu-67	Zn-68	Al
Ga-67	Zn	stainless steel
Ge-68	Ga	Nb
Se-72	NaBr	stainless steel
As-73	Ge	stainless steel
Br-77	NaBr	stainless steel
Rb-81	Kr	stainless steel
Sr-82	RbCl	inconel
Y-86	SrCl	Al
Y-88	Nb	none
Tc-95m	Rh	none
Tc-96	Rh	none
Ru-97	Rh	none
Pd-103	Ag	stainless steel
Cd-109	In	stainless steel
Pd-109	In	stainless steel
Sn-117m	Sb	stainless steel
Te-118	Sb	stainless steel
I-122	NaI	stainless steel
I-123	NaI	stainless steel
Xe-127	CsCl	stainless steel
Ba-128	CsCl	stainless steel
Lu-177	Ta	none
Lu-177	Hf	none
Os-191	Ir	none
Hg-195m	Au	stainless steel
Pt-193m	Ir	stainless steel
Pt-195m	Pt	stainless steel
Au-199	Pt	stainless steel
Pb-203	Bi	stainless steel
Multiple[1]		none
LBNE	multiple[2]	Al
hi temp SC[3]		none

1. Superinvar, vascomax, carbon-carbon, graphite, AlBemet, Ti
2. Carbon-carbon, graphite, Al
3. Ribbons of BYSCO (Bismuth Yttrium Strontium Copper Oxide)

A storm-water control system directs runoff at the BLIP. This system includes the building's roof drains and gutters, and an impermeable cap that surrounds the building. This engineered environmental-control prevents rainwater from seeping through activated-soil shielding located adjacent to the BLIP Cooling Water Tank. Rainwater infiltrating this zone could leach radioactivity from activated soils and carry it to the groundwater.

BLIP is not a facility for outside users, and most irradiations are routine. In only a very few cases do irradiations vary from the normal operations performed at BLIP. In such cases, BLIP personnel and the C-AD safety review committees review the proposed irradiation.

3.3.7.Radionuclide Research Processing Laboratory (RRPL)

The RRPL in Building 801 transferred from the BNL Medical Department to the C-AD on October 1, 2010, and has various facilities for handling accelerator-produced radioactivity; facilities such as hot cells, hot boxes, analytical chemistry equipment and an accelerator target receiving area. The staff performs most of the radiological work in a few rooms within the RRPL known as the Target Processing Laboratory (TPL). There, the staff chemically process accelerator targets to remove ingredients used in research and in clinical medicine. The RRPL's mission is to receive and work on accelerator targets that were irradiated primarily using a proton beam from C-AD's Linac. Occasionally, the RRPL handles targets irradiated at the BNL cyclotrons or off-site facilities. The RRPL personnel primarily study new accelerator-produced radionuclides for use in design, development, and evaluation of new and more specific radiopharmaceutical ingredients. The RRPL tasks also include distributing radiopharmaceutical ingredients for offsite sale, primarily to the medical community.

In the past, the BNL Medical Department assessed activities in Building 801 RRPL for safety and environmental protection, and established several Operational Safety Limits. The C-AD has determined that hazard controls at RRPL can be managed under the requirements of the Occupational Worker Safety and Health Program rule (10 CFR Part 851), and the Occupational Radiation Protection rule (10 CFR Part 835) . However, not all hazard controls in RRPL equally affect safety. Thus, the C-AD supports the Operational Safety Limits identified in the Medical Department's Supplemental Hazard Analysis for the RRPL with additional quality control, design margins, and operational attention normally given to Credited Controls in an accelerator facility managed under DOE Order 420.2C, Safety of Accelerator Facilities. Thus, the C-AD evaluated the RRPL for Credited Controls and produced an ASE that is specific to the RRPL's activities. Additionally, all work activities at RRPL meet requirements in the C-AD's Conduct of Operations and BNL's SBMS.

Building 801 is two separate buildings, each with its own foundation and interior walls, but it functions as a single building. One part of the building is the non-radioactive or 'Cold Area' and the other part is the radioactive or 'Hot Area.'

The RRPL is contained within the Hot Area, which is the west end of the building, and consists of rooms 2-51, -52, -53, -57A, -58, -60, -61, -62, -63, -68 and the Target Processing Laboratory (TPL), which is the room 2-66 suite. A floor plan of these rooms is in Figure 3.3.7.a, and the red lines indicate the RRPL area of the building. The blue-shaded boxed areas are not part of RRPL or the C-AD. Not shown in the Figure 3.3.7.a are the RRPL's doors or shielded enclosures. The RRPL contains fume hoods, standard laboratory utilities, and experimental

equipment. Room 2-68 houses ionizing-radiation detectors, an Inductively Coupled Plasma Mass Spectrometer, and an Inductively Coupled Plasma Optical Emission Spectrometer. Room 2-63 is a mechanical-equipment room.

The TPL is a facility within the RRPL. TPL Rooms 2-66 and 2-66C contain nine shielded enclosures for remotely handling high levels of radioactivity. Room 2-66A is the target receiving area. Room 2-66B currently houses an out-of-service waste-treatment system, the Radioactive Aqueous Neutralizer, while Room 2-66D is a storage room.

The majority of the work performed in the RRPL relates to chemically processing targets irradiated at BLIP or other facilities. Additionally, the RRPL employees undertake research and development on target processing, alternative target materials, and new products. The RRPL employees handle irradiated targets in the shielded enclosures within the TPL.

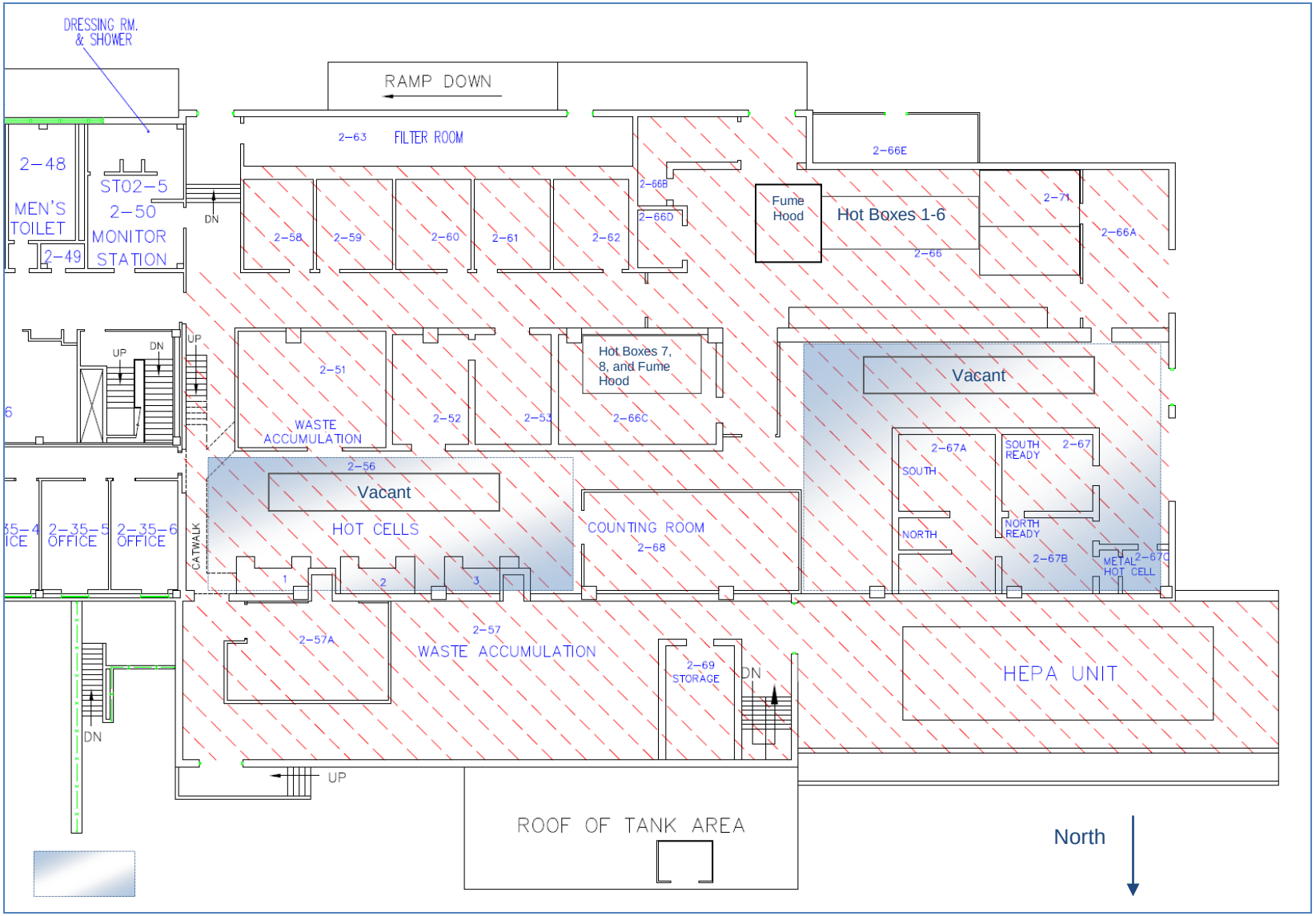

Figure 3.3.7.a RRPL Hot Area Portion of Building 801

The major components of the RRPL that enter into the safety analysis are:

- Entrance and exit points
- TPL Hot Cells, hot boxes and radioisotope fume hoods
- Hot Cell and hot box off-gas acid scrubber system
- Chemical and low-level radiological fume hoods
- Spectrometers
- RRPL ventilation system
- Radiological monitoring system
- Material handling equipment
- Experimental equipment
- Building 801 D-waste system alarms

Entrance and exit points to Building 801 Hot Area are through ten entrance doorways, eight from the building's exterior and two from the Cold Area (Figure 3.3.7.a). The staff locks all doors from the building exterior and interior at all times. Additionally, the staff locks all interior entrances into the TPL.

The walls of the RRPL Hot Cells and hotboxes are made of steel plate and lead. TPL Hot Cell 1 is approximately 3.7 m long by 3.9 m wide by 2.1 m high. Detailed wall shielding descriptions are in a Supplemental Hazards Analysis.[26] The west wall contains a shielded penetration for inserting targets and removing wastes from processing. At the front, the north wall has three master-slave manipulators; there are two lead glass viewing windows in this wall. Exhaust from Hot Cell 1 is double HEPA- and double charcoal-filtered. There is a shielded guillotine or "clam-shell" door on the west wall of Hot Cell 1 for introducing irradiated targets and removing waste. Personnel access to Hot Cell 1 is through two sets of doors in the rear west wall. The outer set of locked shielded double doors is steel plated. Only approved personnel unlock the entrance doors. After the locked outer doors, entrance is through the inner unlocked non-shielded double doors with large viewing windows.

Enclosures 1-8 are hot boxes since the shielding walls do not reach to the floor and the hot boxes cannot be entered standing up. Hot boxes 1-6 are located in Room 66. Hot boxes 7 and 8 are in Room 66C. Hot boxes 1-6 each have outside dimensions of 1.9 m long by 1.3 m wide by 1.6 m high. Steel tables approximately 0.77 m high support the hot boxes. Hot boxes 7 and 8 are 1.4 m high by 1.5 m wide by 1.3 m deep. Steel tables 0.9 m high support them. To allow access to set up equipment or clean the hot box, the front panels of hot boxes 1-6 open pneumatically, moving outward on overhead support rails. Padlocks control access to the pneumatic switches. Hot boxes 7 and 8 have motor-driven front panels that lower for access to the interiors. Keys control access to the motors. Hot boxes 1-6 exhaust through double HEPA filters and double charcoal filters. Hot boxes 7 and 8 exhaust through HEPA filters only. All hot boxes have drains to the D-Waste system. Hot boxes 3-6 are older fixtures containing less shielding than hot boxes 1, 2, 7 and 8. The Supplemental Hazard Analysis lists dimensions of the shielding for the hot boxes.

The radioisotope fume hood in Room 2-66 is stainless steel and attaches to the east walls of hot boxes 1 and 2. The exhaust from this hood is HEPA-filtered. There are two pass-through

[26] Archival Supplemental Hazard Analysis for the Radionuclide Research and Production Laboratory, 2007, http://www.c-ad.bnl.gov/ESSHQ/SND/BLIP/TPL%20Supplemental%20HA%202007.pdf

connections in the rear of the hood, one into hot box 1 and the other into hot box 2. Inside the hood, there is one liquid-waste drain to the D-waste system. Researchers use the fume hood for preparing aliquots of radioactive solutions for assay. Room 2-66C's radioactive fume hood attaches to the east wall of hot box 7 where HEPA filters treat its exhaust. There is one pass-through on the west wall of the hood into hot box 7. Inside the hood, there is one liquid-waste drain to the D-waste system. The Supplemental Hazard Analysis lists the dimensions of the fume hoods.

An Acid Scrubber System neutralizes hot box 1-6 and hot-cell-localized-exhaust before passing it to a non-acid off-gas exhaust system. The acid scrubber is selective and activates manually. It captures and scrubs fumes via "elephant trunk" ducts in the hot boxes, and does not capture all exhaust from them. The system is located in Room 2-66A in a low-occupancy area. Staff maintains buffer solutions and filters to ensure radiation levels are ALARA, and pH levels are between 2 and 12. RCTs survey and post the area accordingly to alert personnel to radiation-exposure levels.

Standard laboratory fume hoods are located in Rooms 2-52, -57A,-58, -60, -61 and -62. Some are HEPA filtered. Unfiltered hoods are for processes, such as handling hazardous chemicals. HEPA-filtered hoods are for particulate hazards including some low-level radioactive particulates. The hood in Room 2-62 is charcoal-filtered for substances such as radioiodine. The C-AD manages hoods and filters per the Exhaust Ventilation Subject Area.

The spectrometers analyze radioactive solutions for stable elements. They produce mixed radioactive and hazardous waste and exhaust via a HEPA filter.

There are no exterior windows in the RRPL and all entrances close and lock. Ceiling-mounted ducts supply heated or chilled air to all rooms. The air-conditioning unit for this air supply is in the attic of Building 801. Additional make-up air to Rooms 2-66 and 2-57A is from units located on the roof of Building 801.

Ventilation for the RRPL provides continuous negative pressure in the TPL relative to the rest of the RRPL and, in turn, provides continuous negative pressure in Building 801 relative to outside air pressure. Figure 3.3.7.b is a sketch of the RRPL's upgraded ventilation system and emission points. BNL completed the ventilation system upgrade in 2011.

Fifteen existing RRPL fans formerly exhausted air into two Building 802 fans and then into the HFBR/BGRR stack. In 2010, BNL disconnected the two Building 802 fans and removed the underground ductwork. The 15 RRPL fans now exhaust air into three booster fans (BEF 1 to 3) on the roof of Building 801 (Figure 3.3.7.b), two of which operate at the same time. BNL designed the disconnected 802 fans for the former BGRR, not for the RRPL. The HFBR/BGRR stack emission point was approximately 350 feet above sea level. The new Building 801's emission point is 181 feet above sea level (BEF 1-3). The ESH Directorate reviewed and approved the new emission point at this height, and BNL followed the SBMS Subject Area for the new stack-height and flow-rate requirements.

BNL added a platform with fence rails to service BEF 1-3, and placed postings to warn of radioactive emissions from a damper that automatically opens onto the Building 801 roof during a BEF 1-3 power failure.

Supply air into Building 801 "Hot Area" is via two HVAC air handlers. BEF 1-3 interlock with supply air in a graded way, and a pressure-differential greater than 0.02-psi shuts down BEF 1-3. BNL also replaced the HVAC air-handlers. If the 15 primary fans shut down due

to a power failure, then BEF 1-3 will keep RRPL negative with respect to outside air pressure; that is, all hoods, hot cells and hot boxes in Building 801 then will remain at negative pressure, A new emergency generator offers 100 kW back-up power to BEF 1-3.

Controls are in a web-based monitoring and control system operated by F&O Directorate (Building 600); the C-AD's CAS Watch can access it. A local monitoring panel, in Room 250, Building 801, indicates the operation of all fans, motor currents, and alarms. There are audible and visual alarms. Alarm response is in a written procedure.

F&O tests the emergency backup generator every month, and RCTs check RRPL since there is a moment of no power to fans when the generator switches over; in this moment, flow is reduced. The F&O cycles one out of the three BEF fans every quarter.

There are about 13 HEPA filters and several charcoal banks in the system. Two hoods have no HEPA filters. BNL completed a NESHAPS evaluation for the Building 801 emission point. The C-AD's RCTs periodically monitor the nearby buildings and grounds to ensure < 25 mrem per year to neighbors on the BNL site due to routine RRPL operations.

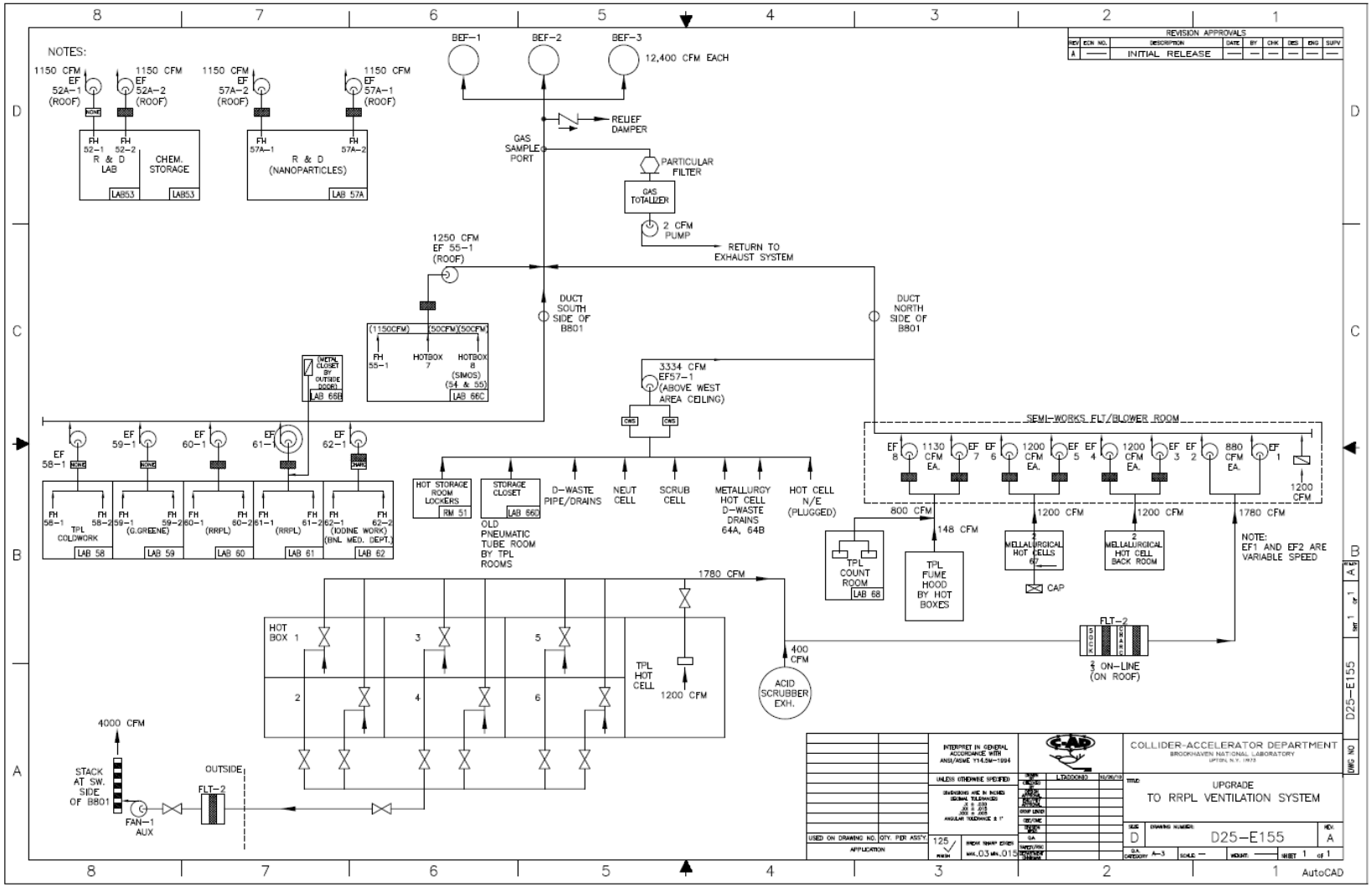

Figure 3.3.7.b Sketch of Upgraded RRPL Ventilation System

Within the TPL, there are counter-weighted air dampers in the wall between rooms 2-66 and 2-66A, and between 2-66A and Hot Cell 1. They move in response to changing room air-pressure, such as from opening a door, to ensure that the entire area remains under negative pressure. In the TPL, room air moves into the fume hoods, hot boxes, and Hot Cell 1 through air inlets in the roof in Hot Cell 1, air gaps around the front panels in hot boxes, or through fume-hood openings. Blowers EF-1 and EF-2 located in the Semi-Works Filter Room (Figure 3.3.7.b) supply the draw. Exhaust from Hot Cell 1 is through a large duct on the south wall inside Hot Cell 1. Four roughing filters cover the entrance of the duct. Exhaust from hot boxes 1-6 is through a duct on the top of each hot box. A roughing filter covers the entrance to each duct. Each separate duct joins with the exhaust duct from the other hot boxes into one running above the roofs of the hot boxes. This duct joins with the Hot Cell 1 exhaust duct in the target-receiving area. The Semi-Works Filter system pulls the duct air, eventually exhausting it through HEPA- and charcoal-filter banks to the roof of Building 801 via booster exhaust fans BEF-1 through BEF-3. The fume hood exhausts separately via two high efficiency HEPA-filtered blowers also located in the Semi-Works Filter Room.

In Room 2-66C, the two hot boxes and the fume hood ventilate through ducts on the top of the hot boxes using HEPA-filtered fan EF55-1 and then through booster exhaust fans BEF-1 through BEF-3 located on the roof of Building 801. To ensure adequate airflow when opening hot boxes 1-6 for maintenance and cleaning, these hot boxes have an auxiliary exhaust system. The auxiliary ducts branch off the primary hot boxes' exhaust-ducts after the roughing filter. RRPL operators manually enable the system when opening the hot boxes. The manual system uses a separate high-efficiency HEPA-filtered fan located on the roof of Building 801 to provide draw. The exhaust vents through a separate stack located on the southwest corners of the roof of Building 801.

Each auxiliary duct has a pneumatic isolation-damper to open only the duct to the hot box with the open door, which activate when it opens. The Room 2-66 hot boxes, fume hood, and Hot Cell 1 have individual airflow-measuring stations and pressure-sensing lines. The auxiliary HEPA-filtered fans also have pressure-sensing monitors for the HEPA filters and the pre-filter. Monitors for the hot cell/boxes and fume hood in Room 2-66 relay their signals to a control panel.

The staff changes the roughing filters on the hot boxes and Hot Cell 1 as needed to keep the ambient radiation levels ALARA. Most of the radioactivity that accumulates on the roughing, HEPA-, and charcoal-filters is short-lived.

Two continuous airborne monitoring systems (CAM) for monitoring airborne radioactivity at two locations, one by the hot box area fume hood and one by the north side of hot boxes 1 through 6, inside the TPL and are placed outside Room 2-66, which has lower ambient radiation levels along the north wall on the balcony. Personnel use a GM-meter sited just inside the main doorway to perform a cursory survey of themselves and equipment. RCTs use a portable survey-meter to survey radiation sources, such as assay samples and waste containers. Hot Cell 1 has a radiation-process monitor placed inside the rear entrance door, with readout located on the outside wall just to the right front of the cell. It monitors radiological conditions within the hot cell for operational purposes. A GM-meter on a cart in the hallway leading to the TPL supports on-going work, and another is at the Hot Area Radiological Buffer Area step-off pad. Staff performs personnel monitoring and material exit surveys with these units.

There are several devices, such as electric- and manual-pallet jacks, chain falls, and hoists in the RRPL to lift and/or move heavy objects. A 3-ton crane runs on a monorail in a straight line along the east wall of the TPL to the outside loading platform. A spur of this monorail runs over Room 2-66B. Other overhead cranes are located around the Hot Area.

In the TPL, there is a storage cabinet for flammable chemicals, two acid-storage cabinets, a refrigerator for storing flammable chemicals, and a dishwasher for washing radioactively contaminated glassware. In Room 2-66C, there is a storage cabinet for flammable chemicals beneath the fume hood. Elsewhere in the RRPL, most fume hoods include cabinets for flammable chemical storage, and additional ones are available adjacent to the RRPL in Room 2-56.

Aqueous nonhazardous radioactive waste (D-waste) collects in temporary storage tanks in the basement of Building 801 for beta- and gamma-ray emitting radionuclides. The D-waste system components are

- Laboratory sinks and drains connected to the system
- Stainless steel piping in under-the-floor shielded trenches
- Three 500-gallon stainless steel tanks and associated plumbing in Room I-H4, which is the Neutralization Cell
- Monitoring instrumentation in Room 2-57
- Leak-detection system in trenches and Room I-H4

Trained personnel use the D-waste system and follow D-waste acceptance criteria posted at every sink in the RRPL. D-waste from all sinks, the dishwasher in the TPL and the emergency decontamination shower in room 2-50 routs to hold-up tanks in the basement where the waste accumulates before disposal. Air volume in the tanks and the D-waste drain lines exhausts through exhaust fan EF57-1 that discharges to the booster exhaust fans BEF-1 through BEF-3 on the roof of 801. One out of three 500-gallon D-waste tanks is on-line at all times to receive incoming waste. Each storage tank fills to approximately 400 gallons before the next tank is used. Each tank has a high-level alarm that annunciates in Room 2-57: the alarm ties into the building's public-address system. A call-out system forwards phone calls for off-hours notifications.

The leak-detection system monitors the under-floor trenches that hold all D-waste piping, and the floor in Room I-H4. It ties to the building's public address system, and the call-out system. Maintenance and inspection of the D-waste tanks and associated equipment follow requirements in the Storage and Transfer of Hazardous and Nonhazardous Materials Subject Area.

Fixed-temperature/rate-of-rise combination detectors help protect Building 801 in the event of fire, and certain air ducts have smoke detectors. There are manual pull boxes located in corridors and at strategic exits throughout the building. These detectors and pull boxes set off alarms that annunciate locally as well as at BNL Fire/Rescue Headquarters and Police Headquarters. There is a Tone Alert Radio receiver on the buildings first floor. The BNL Emergency Response Organization uses it to communicate. In its normal mode, any message received transmits over the building's public address system. Personnel in the TPL hear the system from any location therein. Building 801 has an alarm system for the non-acid fans, which monitor negative static pressure in the ventilation duct. When there is a drop in negative pressure, an alarm sounds. Personnel can hear this alarm in the TPL with the entrance doors

closed. Personnel respond to the alarm and notify all users of ventilated spaces of the off-gas system shutdown. The D-waste has several alarms for conditions of a full storage tank or a leak in either the tanks or D-waste piping. Personnel respond to these alarms and notify users of the D-waste system of any changes in status of the system.

3.3.8.F&O Facilities and Accelerator Facilities

3.3.8.1.F&O Facilities and the Built Environment

All C-AD buildings and utilities are examples of the facilities owned and maintained by BNL's F&O Directorate. Operation of steam supply, maintenance of the AC power distribution systems including emergency power generators, and supplying well water for accelerator cooling and potable water systems are examples of F&O Directorate activities that support the physical plant. These examples constitute some, but not all, of the built environment that F&O manages and within which C-AD manages its research spaces and programmatic equipment.

The Manager of the F&O North Facility Complex (NFC) Manager is responsible for managing and maintaining the built environment in and around all the C-AD accelerator facilities, and is responsible and accountable for ensuring any BNL employee or sub-contractor from the NFC performs work in a safe, compliant manner. The C-AD reviews and approves NFC's maintenance work, new construction, or modification work on or near radiation shielding, activated- or radioactive-material, interlocked- and locked-accelerator enclosures, and on systems that generate environmental emissions or those that impact the C-AD's program schedule or operations. The NFC Manager details NFC's work at the C-AD through weekly and daily meetings with the Liaison Engineer for NFC, and the C-AD's Maintenance Coordinator. A list of the built environment and activities that support C-AD, although not complete, is as follows:

- Built environment
  - AC feeders to the building
  - Building cranes
  - Building grounds
  - Building heating, ventilation, and air conditioning (HVAC)
  - Building plumbing
  - Cooling water supply to the building
  - Electrical service up to the interface with programmatic equipment
  - Emergency generators
  - Landline phone-service
  - Potable water supply to the building
  - Sewer- and storm-water systems
- Activities that support the built environment
  - Custodial services
  - Inspection and maintenance of building cranes
  - Maintenance and testing of building's fire protection system
  - Maintenance of HVAC systems
  - Maintenance of roads, sidewalks, and parking areas

- Maintenance of windows, doors, roofs, and walls
- Modifying existing buildings
- Planning and designing new buildings
- Snow- and storm-debris removal
- Trash removal services

3.3.8.2.Accelerator Facilities and the Research Space Environment

Examples of the accelerator facilities include the accelerator enclosures, control rooms, experiments and beam lines. Examples of accelerator equipment are magnets, electrical cables to programmatic equipment, cooling water systems, helium Dewars and cryostats, helium compressors and refrigerators, vacuum pumps and vacuum piping, machine shop tools, heat exchangers, chillers, evaporative coolers, klystrons, lasers, motor-generator sets, transformers, charcoal filter beds, shielding, hot cells, fume hoods, ventilation systems, power supplies, RF systems, and beam dumps. Examples of operations that support accelerators facilities include using the accelerator beam, transferring or rejecting heat from cooling water, operating the cryogenics-plant, assembling electronics, assembling vacuum-flanges, installing magnets, assembling experimental detectors, installing and testing shielding, and producing radioactive ingredients for research and medicine. These examples of the facilities, equipment and operations constitute the research-space environment.

The C-AD Department Chair is responsible for managing and maintaining the research-space environment, and is responsible and accountable for ensuring employees perform work in a safe, compliant manner; this includes work performed by any C-AD employee or sub-contractor. The C-AD reviews and approves all maintenance work and new construction or modification work on or in the accelerator environment. The C-AD's supervisory chain of command communicates safe work activities through weekly and daily meetings. A listing of the research space environment and activities that support it, although not all complete, is as follows:

- Research-space environment
  - Access control systems for accelerator enclosures
  - Analytical chemistry equipment
  - Bake out equipment
  - Beam line equipment
  - Beam line instrumentation
  - Cables
  - Cable tray
  - Compressors for the cryogenics systems
  - Computer systems and networks
  - Concrete and iron shielding
  - Control systems
  - Cooling towers
  - Cryogenic electro-magnets
  - Earth shielding
  - Electrical transformers for accelerator equipment

  - Emergency or hazardous materials ventilation systems
  - Experiment and accelerator alarm systems
  - Experimental equipment
  - Hot cells and hot boxes
  - Impermeable Activated-Soil Caps
  - Power supplies
  - Programmatic lifting equipment
  - Radioactivity counting equipment
  - Radiological barriers
  - Storage tanks
  - Vacuum pipe
  - Warm electro-magnets
- Activities that support the research-space environment
  - Beam line assembly and disassembly
  - Cable installation
  - CAS Watch
  - Cooling water operations
  - Cryogenic Control Room operations
  - Cryogenic system maintenance
  - Electronics assembly
  - Experiment assembly and disassembly
  - Experiment control room operations
  - Gate watch
  - Machine-shop operations
  - Magnet cleaning
  - Main Control Room operations
  - Metal cleaning
  - Plating operations
  - Siemens Control Room operations
  - Target assembly
  - Target processing
  - Vacuum system maintenance

3.4. Standard Industrial Hazards as Initiators of Significant Incidents

Standard industrial hazards are those routinely encountered and accepted in general industry and for which national consensus codes and/or standards exist to guide their safe design and operation. The C-AD uses controls for standard industrial hazards based on the following hierarchy:

(1) Elimination or substitution of the hazards where feasible and appropriate
(2) Engineering controls where feasible and appropriate
(3) Work practices and administrative controls that limit workers' exposures
(4) Personal protective equipment

Additionally, the C-AD addresses standard industrial hazards when selecting or purchasing equipment, products, and services. Based on an event at CERN, the C-AD determined that one standard industrial hazard, electrical arc, could initiate a significant ODH accident. The C-AD's standard industrial hazards and the potential to become initiators for significant incidents are as follows:

- Standard Industrial Hazards from RF Structures: Non-Ionizing Radiation and X-Rays
    - Controls
        - Equipment designs reviewed by C-AD Radiation Safety Committee for x-ray hazards
        - Ionizing-radiation shielding
        - RF-shielding
        - Configuration-controlled drawings for shielding and equipment
        - Formal Conduct of Operations program
        - Compliance with BNL's SBMS Work Planning and Control Subject Area
        - Implementation of OHSAS 18001 Health and Safety Management System
    - Potential for RF or X-Rays to Initiate a Significant Incident
        - Unlikely
- Standard Industrial Hazards from Cryogenic Systems: Extreme Temperatures, Pressure
    - Controls
        - Pressure-vessel and piping designs reviewed by BNL's Pressure and Cryogenic Safety Subcommittee
        - Compliance with ODH Subject Area
        - Ventilation systems used to exhaust escaping gases
        - Sectionalizing valves used to limit cryogenic-fluid losses
        - Certified burst disks and relief valves per ASME
        - Pressure-testing of pressure vessels and piping per ASME
        - Configuration-controlled drawings of piping, pressure vessels, and instrumentation
        - Formal Conduct of Operations
        - Compliance with BNL's SBMS Work Planning and Control Subject Area
        - Implementation of OHSAS 18001 Health and Safety Management Systems
    - Potential to Temperature of Pressure to Initiate a Significant Incident
        - Unlikely
- Standard Industrial Hazards from Vacuum Systems: Stored Energy
    - Controls
        - Designs reviewed by BNL Pressure and Cryogenic Safety SubCommittee for backfilled pressure relief
        - Designs reviewed by the C-AD's Chief Mechanical Engineer
        - ASME- certified burst disks or pressure reliefs used where appropriate
        - Formal Conduct of Operations
        - Compliance with BNL's SBMS Work Planning and Control Subject Area
        - Implementation of OHSAS 18001 Health and Safety Management Systems
    - Potential for Stored Energy to Initiate a Significant Incident
        - Unlikely

- Standard Industrial Hazards from Electrical Systems: Arc Flash, Fire
  - Controls
    - Designs reviewed by the C-AD's Chief Electrical Engineer
    - Designs reviewed by the C-AD's Chief Mechanical Engineer
    - Ground-fault monitoring and alarm systems
    - Equipment and cable-tray grounds
    - Fire-retardant materials in electrical systems
    - Enclosures or barriers over electrical conductors
    - Voltage-taps at RHIC magnets and quench-protection circuits
    - Adherence to National Electrical Code
    - Formal Conduct of Operations
    - Compliance with BNL's SBMS Work Planning and Control Subject Area
    - Implementation of OHSAS 18001 Health and Safety Management Systems
  - Potential for an Arc Flash or Fire to Initiate a Significant Incident
    - An arc flash associated with the superconducting electrical system at the RHIC may lead to a significant ODH incident with several fatalities
- Standard Industrial Hazards from Experimental Equipment: Noise, Heat, Slips and Falls, Electric Shock, Impact Force
  - Controls
    - Designs reviewed for safety by the C-AD's Chief Mechanical Engineer
    - Designs reviewed by the C-AD's Chief Electrical Engineer
    - Accelerator design and as-built reviewed by the C-AD's Accelerator Systems Safety Review Committee
    - Experiment design and as-built reviewed by the C-AD Experimental Safety Review Committee
    - Certified hoists, cranes, and rigging equipment
    - Personal-protective equipment
    - Review of structures supporting heavy loads
    - Review of structural changes to cranes and buildings
    - Heat detection, smoke detection, automatic sprinklers, and fire-alarm systems
    - Annual testing of fire-protection systems
    - Configuration-controlled drawings
    - NRTL or equivalent rated equipment
    - Formal Conduct of Operations
    - Compliance with BNL's SBMS Work Planning and Control Subject Area
    - Implementation of OHSAS 18001 Health and Safety Management Systems
  - Potential for Noise, Heat, Slips and Falls, Electric Shock or Impact Force to Initiate a Significant Incident
    - Unlikely
- Standard Industrial Hazards from Cooling Water Systems: Pressure, Heat
  - Controls
    - Compliance with ASME's Process Piping Code
    - Cooling-water-level monitoring and alarms
    - Configuration-controlled drawings

        - Formal Conduct of Operations
        - Compliance with BNL's SBMS Work Planning and Control Subject Area
        - Implementation of OHSAS 18001 Health and Safety Management Systems
    - Potential to Pressure and Heat to Initiate a Significant Incident
        - Unlikely
- Standard Industrial Hazards from Air Handling Systems: Exposure to Hazardous Chemicals and Dispersible Radioactive Materials
    - Controls
        - Compliance with SBMS requirements for exhaust ventilation systems
        - Fume hood testing and maintenance
        - Filter testing and maintenance
        - Air- flow rate and pressure-drop monitoring and alarms
        - Configuration-controlled drawings
        - Formal Conduct of Operations
        - Compliance with BNL's SBMS Work Planning and Control Subject Area
        - Implementation of OHSAS 18001 Health and Safety Management Systems
    - Potential to Chemical or Radioactive Material Exposures to Initiate a Significant Incident
        - Unlikely

3.5.List of Controls that Prevent Pollution

The C-AD identifies controls that prevent pollution by identifying significant aspects and impacts of each process in the complex that uses energy and has emissions. Pollution prevention controls reflect regulatory requirements, and address the pollution-prevention goals and objectives set by BNL and the DOE. The following is a partial list of controls:

- Accelerator Operations and Maintenance
- Air Emissions
- Air- sampling for radioactive emissions from stacks
- Annual inspection of caps (minimum)
- Charcoal filters
- Compliance with BNL's SBMS Work Planning and Control Subject Area
- Compliance with SBMS's requirements for stack design
- Compliance with SBMS's requirements for waste
- Compliance with Suffolk County Article 12
- Cooling-water-system sampling for metals and radionuclides
- Environmental monitoring for sky-shine radiation and shine from airborne emissions
- Formal Conduct of Operations
- Ground-water monitoring for radionuclides
- Ground-water Protection
- HEPA filters
- Hi/low cooling-water level alarms
- Impermeable rainwater caps over activated soil locations

- Implementation of ISO 14001 Environmental Management Systems
- Inspection of ventilation systems per SBMS requirements
- Inspections of chemical storage and feed systems
- Labeled waste-containers
- Leak-detection systems
- NESHAPs evaluations
- Radiation measurements of the waste streams
- Review of beam loss locations by the Radiation Safety Committee
- Satellite Area inspections
- Scheduled preventive maintenance for water- and air-handling systems
- Spill-response procedures
- Technical basis document for radioactive-waste management
- Waste management procedures

3.6.C-AD Organization

The C-AD administers and organizes itself to assure safe operation in accomplishing its mission to do the following:

- Excel in environmental responsibility and safety in all departmental operations
- Develop, improve, and operate the suite of proton/heavy ion accelerators used to carry out the program of accelerator-based experiments at BNL
- Support the experimental program including design, construction, and operation of the beam transports to the experiments and radionuclide-production facilities, plus partial support of detector and research needs of the experiments
- Design and construct new accelerator facilities in support of the BNL and national missions

In meeting its mission, the C-AD is under a formal agreement with the Department of Energy on Conduct of Operations.[27] The program is modeled after the DOE Conduct of Operations Order and Guides, and includes a C-AD Operations Procedure Manual (OPM), which specifies key procedures, chain-of-command, authorized personnel and other operational aspects.[28] C-AD managers assure that personnel are qualified in safe operations through training and through formal examinations to certify operational qualifications where appropriate.

The C-AD organization[29] is comprised of four Divisions, the Accelerator Division, the Experimental Support and Facilities (ES&F) Division, the Accelerator R&D Division, and the Environmental, Safety, Security, Health and Quality (ESSHQ) Division. The Accelerator Division brings the accelerators on line and integrates the operation of their various accelerators into that of the complete facility. The ES&F Division plans, helps design, builds and maintains the experimental areas and accelerator facilities including the NSRL, BLIP, PHENIX, STAR, ANDY, Building 912 and RRPL and provides technical support for modifications to experiments or accelerators. The Accelerator R&D Division designs, builds, and tests new accelerator

[27] C-AD Conduct of Operations Documents
[28] C-AD Operations Procedure Manual
[29] C-AD Organization Chart

systems, such as RF cavities and ERL. The ESSHQ Division provides technical-work products, maintains the accelerators' authorization bases documents, training services, configuration-control services, conventional- and radiological-safety services, environmental management, occupational safety and health management, waste management, and internal assessment services for the accelerators and experiments.[30]

3.6.1.Conduct of Operations for C-AD

A Conduct of Operations Program consists of formal documentation, practices, and actions implementing disciplined, structured operations that support mission success and promote the protection of workers, the public, and the environment. The goal is to minimize the likelihood and consequences of human fallibility, or of technical- and organizational-system failures. Following the Conduct of Operations Order has been contractually binding at C-AD since 1991. The Conduct of Operations supports safety and mission success for a wide range of hazardous, complex, and mission-critical operations, and some attributes of Conduct of Operations enhance routine operations. It supports the Integrated Safety Management (ISM) System by providing concrete techniques and practices to implement the ISM's Core Functions. The C-AD implements Conduct of Operations through procedures and safety-management systems; it is not a stand-alone program.

The DOE provides eighteen DOE Guides for writing procedures, LOTO, communications, operations organization and administration, log keeping, independent verification, and the like that explain how to meet the principles in the Conduct of Operations agreement. The C-AD incorporated the "how to" into its ESSHQ programs.

The term "operations" encompasses the work activities of any group or organization at the C-AD, from building infrastructure, to scientific research, to operating the accelerators. While engineered solutions mitigate many hazards at the C-AD, people still must perform operations, and they can, and do, make mistakes. The C-AD's management uses Conduct of Operations to ensure that its management systems anticipate and mitigate the consequences of human fallibility, or potential latent conditions, and to provide a vital barrier to prevent injury, environmental insult, or damage to assets, and promote mission success.

The operation, maintenance, access security, and safety of all the C-AD's facilities are a line responsibility that benefit from the Conduct of Operations' guidance. C-AD controls work by screening repair, maintenance, and non-routine tasks using the C-AD's work planning and control procedures. C-AD line management uses formal procedures to help control routine operations, including accelerator startup, shutdown, operations, maintenance, inspection, design review, ESH review, interlock testing, quality assurance, emergency response, training, communications, occurrence reporting, environmental management, internal assessment and occupational safety and health management. Further, the C-AD's line management maintains its

[30] The BNL ESH Directorate advises C-AD line management on environmental protection, safety and health physics. The BNL ESH Directorate provides environmental, radiological and other safety monitoring and personnel for routine or special procedures, as required. For example, the BNL ESH Directorate monitors air and ground water releases, certifies HEPA filters, calibrates and maintains radiation monitors, and measures and tracks personnel radiation dose. The BNL ESH Directorate Radiological Control Technicians (RCTs) provide technical services to the accelerator facilities in accordance with the BNL Radiological Control Manual.

written procedures in the C-AD OPM and specifies the training requirements for implementing these procedures in Job Training Assessments (JTAs).

The role, responsibility, accountability, and authority statements (R2A2s) document the expectations and duties of C-AD's managers, supervisors, and workers for carrying out operations and maintenance consistent with external- and internal-requirements that flow down into procedures and practices.[31] Only authorized Department personnel operate or modify the accelerator facilities. The on-duty C-A Operations Coordinator's responsibility is the direct supervision of shift operations. Correspondingly, each C-AD supervisor has this responsibility for non-shift operations. All operators and supervisors may shut down an accelerator facility or experiment if there is an unsafe condition, or whenever they judge that continued operation is not safe. The C-AD authorizes operators and supervisors to take any other corrective safety- or environmental-protection-action stated in the C-AD's OPM. The C-AD's coordinators plan work, schedule maintenance, and help obtain the authorizations prescribed in the C-AD's OPM. During operations of the accelerators, the on-duty C-A Operations Coordinator acknowledges and allows work on the accelerator facilities; during periods of shutdown and maintenance, the C-A Maintenance Coordinator assumes this role.

The accelerators operate from the C-AD Main Control Room in Building 911. Figure 3.6.1 shows the shift organization for operating the RHIC.

During operations, responsibility for the safe and reliable operation of the C-AD complex resides with the on-duty Operations Coordinator, who is the shift supervisor for the operating personnel, and the focus for all operations-related questions. Aside from the accelerators, several sub-systems support the Collider-Accelerator complex, including the motor generators, water systems, RF-acceleration system, vacuum systems, injection equipment, extraction equipment, cryogenic equipment, transfer lines, beam lines, target halls, and the experimental areas. To support these systems during operation, the on-duty Operations Coordinator relies on accelerator physicists and equipment-systems specialists. Accelerator physicists are trained scientific personnel familiar with the theory and practice of operation and performance of the accelerator systems. Systems specialists build, maintain and repair equipment necessary for operations or provide trouble-shooting expertise when problems arise.

Occasionally, accelerator physicists or systems specialists operate parts of the accelerator complex. The on-duty Operations Coordinator allows access to accelerator controls after these personnel acknowledge the on-duty Operations Coordinator as the decision-maker assuring the safe and reliable operation of the Collider-Accelerator facilities; they must follow Operations Coordinator orders during an emergency.

[31] R2A2 Subject Area

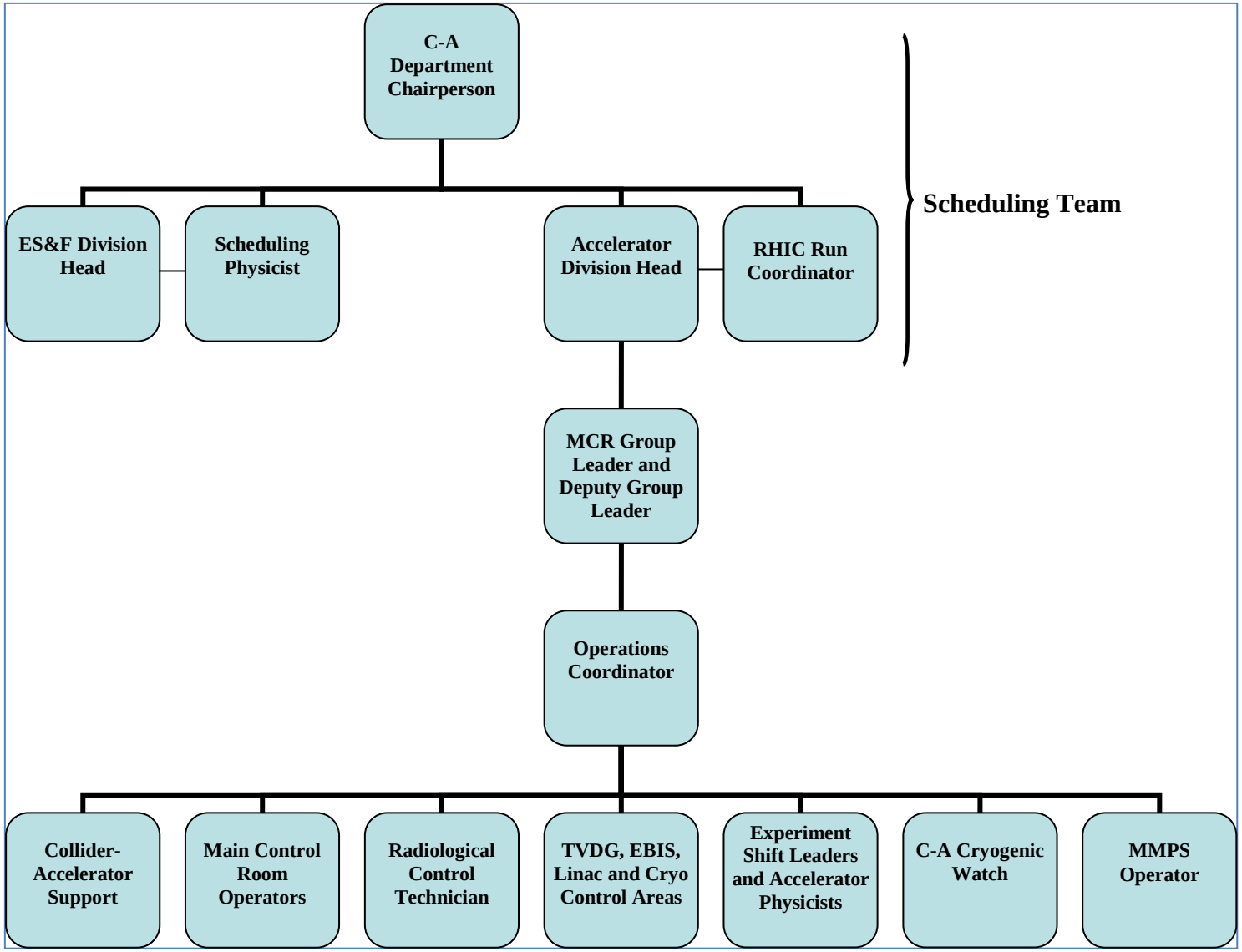

Figure 3.6.1 C-AD Shift Operations Organization

3.6.2.Conduct of Operations for Non-RHIC Accelerator Facilities

Aside from RHIC, its injectors and pre-injectors, there are several supporting experimental areas and accelerator facilities that include NSRL, BLIP, PHENIX, STAR, ANDY, ERL, RRPL, and the Accelerator R&D Facility. They also operate under the C-AD's Conduct of Operations.

3.6.3.Operation Authority in the C-AD Management Line

The safe operation and maintenance of the C-AD's accelerators, injection systems, and experimental areas are under the supervision of the C-AD Chair, the Accelerator Division Head, the ES&F Division Head, and the Operations Coordinator during operations and/or the supervisory structure. Only authorized personnel may operate the accelerators, production facilities, experimental facilities and accelerator subsystems. All operations must have the appropriate authorization. The C-AD OPM lists the following authorities, either by title or by name:

- Department Chair authorization
- Associate Chair authorization
- Assistant Chair authorization
- Division Head authorization
- Group Leader authorization
- Supervisor authorization
- Authorization to operate systems
- Accelerator startup or restart authorization
- Work control authorization
- Maintenance Coordinator authorization
- Authorization to classify, remove or designate approval for procedures
- Department Chair, Division Head, Group Leader, Committee Chair and QA authorization of procedures
- Committee membership and organization chart authorization
- Modification of training authorization
- Authorization to approve QA level classifications
- Authorization to approve purchase requisitions and intra-laboratory requisitions for ESSHQ compliance
- Authorization to declare systems as "critical"
- Authorization to approve electrical work permits and procedures
- Authorization to approve lock and tag checklists
- Authorization to approve experiments
- Authorization to approve new or modified accelerator systems
- Authorization to approve new or modified shielding
- Authorization to approve new or modified access control systems
- Authorization to approve cyber security for C-AD networks and networked devices

3.6.4.Administration and Organization of ESSHQ

The administration of ESSHQ at the C-AD conforms to a hierarchy of requirements documents: Brookhaven Science Associates (BSA) Policies, BSA Standards of Performance, R2A2s, BSA Management Systems, BNL Subject Areas, C-AD Accelerator Safety Envelopes, C-AD Conduct of Operations Agreement, and Facility Use Agreements. At the working level, the Department administers these requirements with departmental procedures (C-AD OPM).

BSA's ESSHQ Policies are the highest-level statements of the BSA organization's philosophy for conducting business in a safe, environmentally sound manner. They encompass the complete set of foundational philosophies upon which the Laboratory operates.

Standards of Performance are BSA's "requirements" underlying Laboratory-wide procedures, and set the performance expectations for BSA systems, managers, and staff to accomplish BSA's Policies. By definition, the term "staff" includes all BSA employees and sub-contractors. Standards of performance also apply to those guests, visitors, and users who have a guest number and a DOE photo-identification badge. Standards of Performance are high-level behaviors by which BSA carries out its policies; they help staff conduct business consistently with missions, values, and aspirations.

The role, responsibility, accountability and authority statements (R2A2s) establish the expectations and duties of managers and staff for carrying out the work consistent with external- and internal-requirements.

BSA's Management Systems translate the full set of external requirements into the information that staff need to perform their work or to develop procedures to undertake their tasks. Management Systems are BNL's highest-level operating and business processes.

Subject Areas capture the requirements, procedures, and guidelines that apply to a broad group of staff across BNL. SBMS allows alternative methods of communication for information applicable only to a select group of staff, such as departmental operating procedures (i.e., C-AD OPM). Subject Areas and departmental operating procedures support the implementation of external standards and regulations.

For the C-AD, a Conduct of Operations Agreement with the DOE serves as the basis for developing departmental operations procedures.

C-AD Groups use the OPM to implement management system processes that affect only C-AD facilities. The C-AD's ESSHQ Division ensures that these procedures are current and based on the Laboratory-level governing documents, applicable safety analyses, and the DOE approved ASEs. All C-AD personnel are knowledgeable in procedures associated with their work. The C-AD's OPM is a controlled document and conforms to quality-assurance requirements.

Each worker at C-AD is responsible for knowing and observing the rules. If any trained person observes any potential hazards, environmental problems, or safety problems, then they must stop the work or activity, and report it. The C-AD supervisors are responsible for all activities conducted under their purview. C-AD managers are committed to providing a safe, healthy working environment for all staff; protecting the public and the environment from unacceptable environmental-, safety- and health-risks; operating such to protect the environment by applying pollution-prevention techniques to current activities; and, remediating the environmental impacts of past operations.

Figure 3.5.3 shows the C-AD's ESSHQ organization, formal ESSHQ programs and committees, and formal ESSHQ roles. The Associate Chair for the ESSHQ and the ESSHQ's Division Head are members of the C-AD Department Chair's Office. The Associate ESSHQ Chair's duties are to implement new- or revised-formal ESSHQ programs, to carry out the

leadership role for ESSHQ, to inform staff and sub-contractors on the status of ESSHQ in the department, to establish communications between workers, supervisors and managers, and to maintain the established ESSHQ programs. This overall approach integrates tested and proven ESSHQ practices into all work through meetings, procedures, work observations, and training.

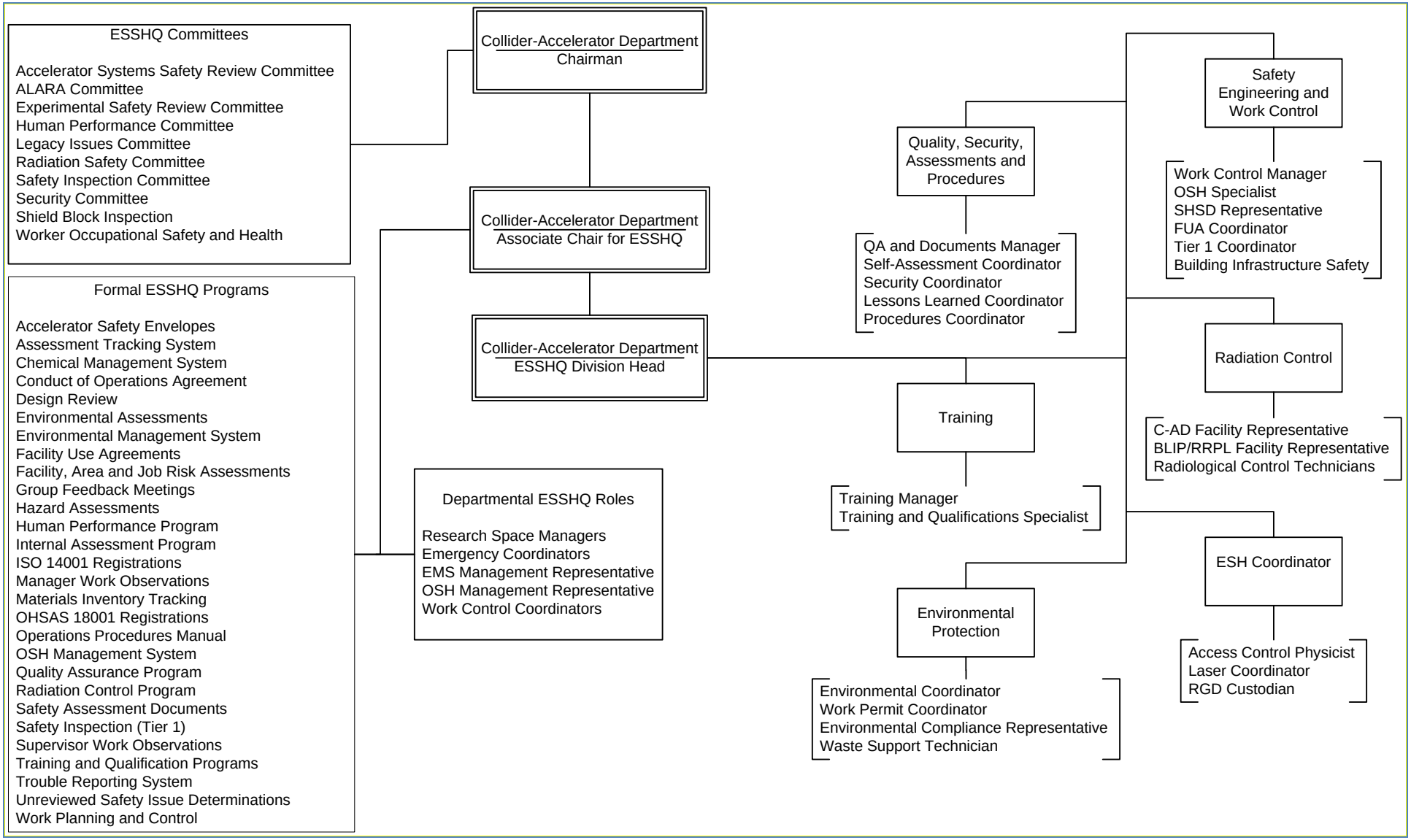

Figure 3.6.3 Organization and Formal Programs for ESSHQ at C-AD

The C-AD's Division Head for ESSHQ assists C-AD in 1) maintaining the authorization for accelerator operations, 2) maintaining E- and OSH-management systems for inspection by outside registrars, 3) complying with regulations and laws, and, 4) preventing thefts of valuable materials. The Division Head participates actively in the C-AD's ESSHQ Committees.

The C-AD staff self-assess and self-evaluate using a formal Management Review program, safety inspections, managers' work observations, supervisors' work observations, shield block inspections, and by participating in the meetings of the Worker Occupational Safety and Health Committee and in Group Feedback. The C-AD assures internal oversight via the C-AD Quality Group who formally audits the implementation of procedures. The C-AD Quality Group also tracks findings from inspection programs, assessments, and audits and similarly tracks performance on goals and objectives developed via the worker feedback programs and Management Review.

Management Review is an annual practice whereby senior managers review the C-AD ESSHQ targets and objectives to ensure they relate to critical outcomes and objectives in the BNL/BSA contract and to Lab-wide objectives and targets for ESH. Senior BSA managers evaluate compliance audit results, performance versus contract measures, other external and internal assessments of performance, decisions from previous Management Reviews, injury/illness and environmental performance, stakeholder concerns, related facility improvements, injury/illness and pollution prevention initiatives, and related financial investments. At the end of the process, they approve a record of decision to drive the next cycle of continuous improvement in occupational safety and health and environmental protection.

The C-AD ESSHQ Committees receive, consider, and act upon the concerns, ideas, and inputs of workers, and they investigate and help remediate legacy hazards at the C-AD. These Committees also review new procedures and new equipment-designs for safety, operational impacts, ergonomic issues, ease of maintenance, energy savings, and compliance with NEC, OSHA, NFPA, and the ASME Code. Together with the C-AD's Chief Electrical- and Chief Mechanical-Engineers, the C-AD ESSHQ Committees review the installation of equipment, electrical safety, security, mechanical safety, vacuum- and pressure-safety, materials safety, and records and procedures issues. Procedures guide the C-AD's Committees and their formal practices in addressing the wide-range of ESSHQ, documentation, communication, authorization, and operational issues covered by the Conduct of Operations Agreement with the DOE BHSO.

The C-AD ESSHQ roles also meet the requirements, procedures, and guidelines that apply to the broad group of BNL's staff because work planning, emergency response, research-space management and the EMS- and OSH-management systems are uniform throughout BNL's varied scientific and support organizations. For example, the job of Research Space Manager (RSM) is a line-organization person acting as the steward for a specific research-space within a research facility. The RSMs help minimize the impacts on research from work on the built environment, thereby ensuring safe and efficient operations. They accomplish this task by serving as a liaison to the Integrated Facility Management (IFM) Project Managers, who manage BNL's built environment.

3.6.5.BNL's Operations Council

The BNL Operations Council (OC) is part of the Blueprint process. BNL intends to bring together senior operations managers from both S&T and support directorates. The OC's

membership includes the Directorate Chief Operating Officers (DCOO) from the S&T Directorates, viz., a DCOO for C-AD, a DCOO from Nuclear and Particle Physics Directorate, a DCOO from Photon Sciences Directorate, a DCOO from GARS Directorate, an F&O Directorate representative, an ESH Directorate representative, an ITD representative, and a Business Operations Directorate representative. The OC intends to help BNL in developing strategy, planning, and risk management. For example, the OC will recommend institutional operational goals and objectives, and their relative priorities. BNL also intends that the OC help BNL in establishing requirements management, continuous improvement initiatives, and operational excellence. Members will concur on SBMS's additions or changes, the annual integrated-assessment plan, and the institutional-level corrective action plans. OC members also will engage with BNL's mangers on Conduct of Operations issues and with the SBMS Management System's Stewards to modify key functions and processes. The Blueprint programs are new, and BNL intends to modify them to ensure they work as intended, so the OC may change in future.

3.6.6.Third-Party Certification Programs

The BSA employs third-party certification for its Occupational Safety and Health (OSH) management system (MS) and its environmental management system (EMS). OHSAS 18001 (OSH MS) and ISO 14001 (EMS) are the standards used for this third-party certification. Certification is the process by which a third party confirms, in writing, that an organization's management system meets the specified OHSAS 18001 or ISO 14001 requirements. Certification means the C-AD's OSH and E management systems meet all requirements of the standards. The process involves an established framework of assessments. The certification body is the third party that actually assesses the C-AD's management systems. Registration is the process by which the certification body, having verified that C-AD's management system conforms to the standard, either OHSAS 18001 or ISO 14001, then includes or "registers" the management system in a publicly available list.

3.6.7.Calibration, Inspection, Testing Frequencies for Credited Controls

A set of calibration and testing requirements assures the integrity of the Accelerator Safety Envelopes during routine operations. Authorities having jurisdiction, such as BNL's Fire Protection Engineer or BNL's Radiological Control Manager, set the requirements for calibration and testing. Although the authority having jurisdiction may give a brief extension, e.g., 90 days, the basic frequency for calibration, testing, maintenance or inspections for Credited Controls listed in the C-AD ASEs, the basic frequencies are as follows:

- The ACSs for accelerator enclosures must be functionally tested annually
- The ACS for ERL accelerator enclosures must be functionally tested semi-annually
- Building ventilation exhaust fans associated with ODH protection systems must undergo semi-annual functional testing, and annual flow-rate measurements and maintenance
- The ODH alarm system must be tested annually
- Fire protection/detection systems must be tested annually
- Area radiation monitors must undergo annual calibration
- Radiological barriers must undergo annual visual inspection
- Rainwater barriers for activated soil at g-2 and BLIP must undergo visual inspection twice per year

The brief extension does not change the range of risk accepted for a specific hazard. Such ranges are established for many hazards, such as ionizing radiation ranges (Controlled Area, Radiation Area, High Radiation Area, Very High Radiation Area), ODH ranges (Class 0, 1, 2, 3, 4), and electrical arc flash ranges (Risk Category 0^+, 1, 2, 3, 4). These specified brief extensions for calibration, testing, maintenance or inspections maintain the same risk range but allow operational flexibility and efficient use of resources when needed.

3.6.8.Minimum Administrative Controls for Safe Operations

The administrative controls for safety during routine operation are the following:

- All work is planned in accordance with work planning procedures in the C-AD OPM
- The Experimental Safety Review Committee (ESRC) reviews existing experiments annually and new experiments before operations
- The Accelerator Systems Safety Review Committee (ASSRC) reviews new accelerator installations before start-up
- The Radiation Safety Committee (RSC) reviews each accelerator start-up annually, and reviews new or modifications to Access Control Systems (ACSs) or to shielding
- Beam-line enclosures or posted limited access areas contain magnetic fields produced by electro-magnets; warning signs prohibit personnel with medical implants from entering areas with magnetic fields greater than 0.5 mT (5 Gauss)
- Electrical hazards are removed using Lockout/Tagout (LOTO) procedures
- Personnel protective equipment is required in all the following cases: work with chemicals, hazardous materials or cryogens, and dispersible radioactive material, entering a machine shop, entering posted noise areas, work under an operating crane or other overhead activity, entering industrial or construction areas and operating an electrical disconnect all require personnel protective equipment
- All material-handling is in accordance with procedures in the C-AD OPM and the SBMS requirements
- Work required at levels more than four feet above ground level requires fall protection evaluation
- Emergency response is planned and in accordance with procedures in Chapter 3 of the C-AD OPM
- Radiological work is planned in accordance with RSC and ALARA Committee-specific procedures in the C-AD OPM and the policies in the BNL Radiological Control Manual
- SBMS requirements for beryllium are followed and the BNL Beryllium Use Review Form or its equivalent is used when beryllium handling is anticipated
- If asbestos-related work is anticipated, then C-AD contacts asbestos removal experts who use written exposure control procedures based on the SBMS Subject Area for Asbestos
- At least one Collider-Accelerator Support (CAS) Group member is required 24/7/365; the C-AD OPM specifies the minimum number of other shift operating personnel at C-AD accelerator facilities

3.6.9.Critical Operations Procedures

Specific operations procedures in Chapter 2 of the C-AD OPM prevent or mitigate accidents related to electrical equipment in the accelerator enclosures. These procedures instruct

personnel who remove the electrical hazards for other personnel entering the accelerators under Controlled or Restricted Access conditions. The C-AD uses independent verification to remove electrical hazards in the accelerator enclosures.

Specific operations procedures in Chapter 2 of the C-AD OPM prevent or mitigate violations of the Accelerator Safety Envelopes (ASEs) for the accelerators and accelerator facilities. They define responsibilities for maintaining the Credited Controls described in the DOE's approved ASEs at the C-AD, and those activities that require a documented Unreviewed Safety Issue determination.

Specific operations procedures in Chapter 4 of the C-AD OPM prevent or mitigate accidents related to resetting the Access Control System for accelerator enclosures. These critical procedures involve clearing (sweeping) personnel from accelerator enclosures before enabling beam operations. Operators use checklists and interact with sequenced check stations to sweep the enclosures. Operators annually re-train using sweep procedures; new or modified ones must receive an independent review by the maintenance staff or other personnel cleared from the enclosure. The sole duty of the operator using these procedures is to ensure that all personnel leave the enclosure before operations begin.

Specific operations procedures in Chapter 9 of the C-AD OPM prevent or mitigate unnecessary radiation exposure outside the shielding due to a beam loss or beam fault. They help ensure the correct position and thickness of shielding. The procedures give instructions to Radiation Safety Committee (RSC) representatives, liaison physicists, RCTs and Main Control Room (MCR) operations staff for conducting fault studies with beams to test the shielding.

3.7. Experiment Safety Review

The C-AD works with liaison physicists, liaison engineers, liaison scientists, experiment spokespersons and members of the Collider-Accelerator Experimental Safety Review Committee (ESRC) to perform a safety review. The C-AD's OPM describes the roles and responsibilities of the liaison staff, and the experimenters. The ESRC has the primary responsibility for reviewing each C-AD experiment to ensure it meets safety requirements and does not introduce a USI. Due to size and complexity, the initial safety review encompasses many steps, and may extend over many years,

The ESRC assures that the experiment's design does not exceed the approved ASE, or the scope and impacts described in any pertinent NEPA document, such as the Environmental Assessment. The ESRC assigns experiment staff and Department staff the responsibility for ensuring closeout of safety items before starting the experiment.

After an initial review, the ESRC requires annual review of each operating experiment. Before conducting this review, the liaison physicist, liaison engineer, and/or the experiment spokesperson(s) detail the modifications. The experimenters may not operate or change experimental parameters beyond their previously approved envelope until the ESRC's review is satisfied. Once the ESRC approves modifications, the experiment spokesperson(s) must fulfill or resolve all pre-start recommendations and closeout all outstanding items.

3.8.Accelerator Safety Review

The C-A Accelerator Systems Safety Review Committee (ASSRC) reviews conventional safety aspects and hazard control of new- and modified-C-A systems, including equipment obtained from outside universities, or other facilities for use at BNL. The project engineer or

physicist presents each project or accelerator modification after it has been through the C-AD design review process with the Chief Mechanical Engineer, Chief Electrical Engineer, and Associate Chair for ESSHQ. The ASSRC requires a completed hazard-review questionnaire before the Committee meets to discuss the ESH issues. After that meeting and before equipment start-up, the ASSRC examines the equipment at its operational location.

The ASSRC assures that the new- or modified-accelerator system's design meets safety requirements, does not involve a USI and that the scope and impacts are within those described in any pertinent NEPA document, such as the Environmental Assessment. Thereafter, the ASSRC requires the completion and signing of a checklist before the C-AD's management authorizes operations.

3.9.Radiation Safety Review

The Radiation Safety Committee (RSC) reviews and approves all changes to the access control systems (ACS) for the C-AD accelerator enclosures, including reviewing the changes to ensure they do not involve a USI. They approve the critical devices that must remove the beam from the enclosure, and establish the radiological conditions that the ACS must address. The RSC also establishes the alarm level and interlock level (beam-removal level) for area radiation-monitors interfaced with the ACS.

The RSC conducts fault studies during commissioning periods for new- or modified-accelerator facilities to verify the adequacy of the shielding and the radiological area's classification. RSC or designates make direct radiation measurements to confirm the classification of Controlled and Radiological Areas, in addition to shielding calculations. The RSC also defines the relationship between Radiological Area classifications and ACS requirements. For example, for different radiation levels, the RSC decides the nature of the enclosure's barrier, the entry requirements, the enclosure's sweep and reset requirements, and the protections required to prevent both the enclosed and adjacent areas from faulting to higher-than-allowed levels of radiation.

The procedure for reviewing new- or modified-ACS designs requires the liaison physicist assigned to each accelerator or accelerator facility to describe the radiation issues and protection methods to the RSC in a written document. The RSC reviews and makes recommendations on the interlock system, paying special attention to defining the classification of the area, and the corresponding ACS requirements.

Before operating any accelerator and at the beginning of each fiscal year, the RSC develops a check-off list for radiation-safety items associated with each accelerator or experimental facility. This list requires designated personnel to verify that the required radiation-safety items are in place prior to routinely operating a facility or experiment. The RSC Chair does not allow operations to begin until the on-duty Operations Coordinator signs-off that all designated personnel on the RSC startup list in the Main Control Room have signed that they completed the startup radiation-safety actions.

3.9.1.Radiation-Shielding Review

The RSC also reviews shielding drawings and shielding calculations to ensure the design meets the C-AD shielding policy and does not involve a USI. The policy's primary purpose is to assure the satisfaction of all radiation-related requirements and administrative control levels. Specifically, RSC reviews facility-shielding configurations to assure

- Annual site-boundary equivalent dose is less than 5 mrem
- Annual on-site equivalent dose to inadvertently exposed people in non-C-AD facilities is less than 25 mrem
- Maximum equivalent dose to persons in any area where access is not controlled is limited to less than 20 mrem during a fault condition
- For continuously occupied locations, the equivalent dose rate is ALARA but in no case greater than an average of 0.5 mrem in one hour or 20 mrem in one week
- Equivalent dose rates where occupancy is not continuous is ALARA, but in no case exceeds 1 rem in one year for whole body radiation, or 3 rem in one year for the lens of the eye, or 10 rem in one year for any organ

In addition to review and approval by the RSC, the RSC Chair or ESSHQ Associate Chair must approve the final shield drawings. The RSC verifies shield drawings by comparing the drawing to the actual configuration.

During the shielding review, the RSC examines the layout of the facility, experimental area, and/or the beam transport system, examining routine radiation levels and possible radiation sources. The latter include minimum apertures, collimators, instrumentation, valves, magnets, targets, dumps, detectors, beam scraping in the beam transport pipe, airborne emissions and cooling water effluent. Sources caused by improperly adjusted beam elements also are considered.

The RSC, with operations- and safety-personnel undertake fault studies to verify the adequacy of shielding and radiological controls. Because the fault study may produce greater than routine levels of radiation, the RSC reviews and approves each one. Only qualified RCTs assist with radiation surveys during the fault study.

The RSC conducts fault studies using the minimum beam intensity necessary to complete the study efficiently, consistent with ALARA practices.

3.10.Configuration Management

The C-AD maintains facility configuration by methods that control the status of equipment and the accelerators. The C-AD Operations Coordinator and C-AD Maintenance Coordinator are responsible for maintaining the proper configuration including authorizing changes to the status of the equipment or the accelerator during operational periods. C-AD's operators use startup procedures and check-off lists, such as the Radiation Safety Check-off List, to ensure and to document proper alignment of equipment before accelerating the beam. They employ a lockout/tagout program and the ACS to protect personnel entering accelerator enclosures on maintenance days, and to aid in controlling the status of the equipment and the accelerators.

C-AD uses administrative controls, such as electronic records, to document compliance with operational limits that are set below the limits of the ASEs. Operations personnel receive accurate information reflecting the accelerator's beam losses and area radiation levels. Engineered controls such as fire alarms, gas alarms, radiation monitor alarms, and pressure- and temperature-alarms appear on the Main Control Room's control panels, and in control rooms used throughout the accelerator complex. These engineered controls help maintain operations within the boundaries of the ASEs.

Several systems document deficiencies in accelerator, including electronic trouble-reporting logs, electronic-operations logs, ACS testing logs, logs of facility tours by the CAS

Watch, and logs of cryo-plant performance by cryogenic-system operators. For deficiencies in an ACS or with shielding, the C-AD follows procedures to ensure the analysis, documentation, and authorization of all repair work or corrective maintenance. For all accelerator systems, the staff performs operational testing following corrective maintenance to demonstrate that equipment and systems can perform their intended function.

After completing initial research on each process or job at the accelerators, C-AD personnel determine if there are any outstanding procedure requirements by analyzing the activities that make up a process or a job. Personnel consider the rationale behind the activities, their frequency and complexity, the consequences of an error, and the need for training to achieve successful performance. To establish the need for procedures, the C-AD uses Facility Risk Analysis, Job Risk Analysis, Job Training Analysis, work planning and control, Process Assessments, experiment- and accelerator-safety reviews, design reviews, hazards analysis, safety analysis, internal assessments, and readiness reviews.

A document-control system ensures that operating- and maintenance-personnel have the latest revision to procedures so that they can properly control equipment and accelerators; this requires clear lines of responsibility and authority that the C-AD clearly designates in the procedures.

C-AD regulates temporary modifications including bypasses and jumpers to the ACS via a computer-based procedure that ensures operators are aware of the modified status of the ACS. It provides for safety and technical reviews, documentation, and updating of associated drawings and procedures. If the modification to the access controls system changes to a sweep procedure, then operators are re-trained.

The C-AD informs operations personnel and users through daily and weekly meetings and internet broadcasts of activities that could affect the accelerator's status or operability of equipment. Additionally, the C-AD informs its operators and watch personnel by holding shift-change meetings that overlap between shifts, by requiring sign-off on required reading logs, and by issuing daily orders.

3.10.1.Configuration Management - Critical Procedures

To ensure the technical adequacy and accuracy of process and equipment information in a critical procedure, technical staff or maintenance- and operations-personnel make a detailed check (walkthrough) of the critical procedure. For procedures for removing the electrical hazards associated with Restricted Access and Controlled Access, independent operations-personnel verify the lockout/tagout activity performed. Observing an activity identifies its sequences and the techniques used that might not be apparent by reading the procedure. For sweep procedures, two operators each undertake this task in an accelerator ring. Before its initial implementation or after changes, maintenance personnel review the sweep procedures since they might be among those left in the ring if the sweep failed. Operators developed these critical procedures after researching potential hazards and problems in previously undertaking these activities, and by eliciting suggestions from experienced personnel.

For testing the ACS, an independent reviewer, the C-AD ACS Physicist, verifies the tests' adequacy and completeness. The C-AD's ESSHQ Division Head independently reviews the procedures operators employ to maintain the ASEs. The RSC reviews fault-study procedures that verify the adequacy of shielding.

3.10.2.Configuration Management – Shielding, Access-Control Systems

The C-AD RSC Chair and the C-AD ESSHQ Associate Chair approve the shielding design for accelerators and accelerator facilities. The record of approval may be part of RSC meeting's minutes or be in a separate document signed by the RSC Chair or the ESSHQ Associate Chair. The RSC approves the official shielding print, which has an identifying number, to become a permanent record. The RSC Chair files the minutes of RSC reviews of a shielding design and the approval, and provides the project engineer who builds or modifies the shielding with a copy. The C-AD's Design Room prepares and issues the engineering drawings in accordance with quality-assurance procedures in C-AD OPM Chapter 13.

The RSC reviews the final interlock design logic and access-controls equipment for a specific accelerator enclosure, and approves the meeting's minutes or drawings of the details of the design logic and access controls equipment. The approved logic diagrams and/or state tables become controlled documents.

Configuration management of radiation monitors ensures that they are in the proper locations, so that the sensed dose-rate provides the ACS and the MCR operators with accurate alarm and interlock signals. Each radiation monitor has a built-in keep-alive source assuring that the ACS continuously senses and reacts if a radiation monitor is disconnected, or has failed. When the C-AD replaces or adds radiation monitors to the ACS, the RCTs use an independent radioactive source to verify that the monitor sends it output signals to the correct readout location.

3.10.3.Configuration Management - Unreviewed Safety Issue Determinations

Standing departmental safety-committees complete a review of experimental installations and accelerator modifications before initial operations with beam. These reviews are part of the configuration-management program that ensures that changes do not involve any unreviewed safety issues (USIs) and do not violate ASE requirements. If the USI determination (USID) process documents a positive determination, then C-AD seeks BNL and BHSO concurrence before proceeding. C-AD appends all USIDs, positive or negative, to the SAD. The USID process ensures the DOE's approval of a change to the ASE, should it be required, before the changes are in effect.

3.11.Characteristics of Systems Having Significant Safety Functions

3.11.1.Interlock Systems for Accelerator Enclosures

The BNL's Interlock Subject Area provides a centralized set of requirements for designing, operating, maintaining, recording, and testing interlock systems for ionizing radiation inside accelerator enclosures, analytical x-ray machines, irradiators, lasers, and ODH areas. Interlocks protect employees from machine hazards while the machine operates or could operate; affectively, interlocks guard machines. OSHA requires the interlocks to comply with OSHA's Machine Guarding Standard (29CFR1910.212), not OSHA's LOTO Standard.

Even though OSHA's Machine Guarding Standard covers interlock requirements for several specific machines, regulatory agencies do not detail their requirements for large unique accelerators. If there are no specific regulations for guarding any particular machine available,

then OSHA requires the employer to develop and implement an effective program for interlocks or other machine guarding devices if used to protect employees against a hazard.

The C-AD applies five basic design criteria for the ACS for accelerator enclosures:

- Either the radiation is disabled or the enclosure is secured to prevent access
- Only wires, switches, relays, programmable logic controllers (PLCs) and RSC-approved active fail-safe devices must be used in the critical circuits of the system
- The system must be designed to be fail-safe; for example, where relays are used, the de-energized state of a relay is the fail-safe state
- Redundant critical devices must be used to disable the beam and redundant ACSs must be used to secure the area if the equivalent dose rate can exceed 50 rem/h
- If a beam fails to be disabled when required, then the upstream beam is disabled; that is, the ACS must have backup or what is sometimes is termed “reach-back”

For accelerator enclosures, the C-AD typically allows three modes of control: Access Prohibited; Restricted Access; and, Controlled Access. The control of each access mode is under the purview of operators in the MCR who select the appropriate mode depending on the schedule of operations or maintenance.

In the Restricted Access mode, the access-control system locks doors to an enclosure. Personnel require a controlled key or a magnetic card for entry. TLDs are required to enter the enclosure for radiation fields greater than 5 mrem/h, and those above 100 mrem/h require digital alarming dosimeters. For unescorted entry, personnel are required to have appropriate radiological training and C-AD area-specific access training. People meeting these requirements may enter the area unescorted if they also meet the conditions of the applicable Radiation Work Permit, and if the ACS allows entry to the enclosure.

In the Controlled Access mode, the MCR Operators ‘sweep’ the area clear of all personnel, then allow trained and authorized persons to enter and exit an area while keeping a log-in/log-out record and using a gate watch or a key tree to count entrants. The operator may be stationed at the gate, or remotely located and able to view an entrant via video camera. The operator controls the opening of the gate. In many cases, the access-control system incorporates bio-identification access systems to log entry and exit into an area under Controlled Access, and to permit the individual to take a key from a key tree. In the Controlled Access mode, the ACS allows an MCR Operator or user at NSRL to reset an area for the beam without a re-sweeping if the gate watcher or bio-identification unit ensures all entrants have exited the enclosure.

MCR operators or users can place an accelerator enclosure in Access Prohibited mode, and subsequently enable the beam only after they sweep the enclosure and complete the sweep-area resets; this applies to the local resets and remote resets. An area-reset state ensures that the sweep status of the enclosure has not changed; viz. entrants have not gone into the enclosure after the sweep. Upon an MCR operator resetting a beam enclosure, the ACS displays a visual warning in the enclosure, sounds an audible warning, and starts a timer before allowing the beam into the enclosure. The time varies for each accelerator enclosure, and ranges from 30- to 90-seconds. If a person remains inside a reset area, he/she can use emergency-stops (crash-buttons or crash-cords), located throughout the accelerator enclosures. They are visible under emergency lighting conditions. Using an emergency stop requires local resetting. The ACS displays the status of emergency-stops in the MCR.

The ACS inhibits beam via hardwired critical devices or critical circuits. For most accelerator enclosures at the C-AD, these systems use two independent critical devices or interlock systems. The C-AD isolates each system from the other when they perform the safety

function, such that any single failure will not entail the loss of protection. Fail-safe means that the system's predictable failures leave the ACS in a safe mode; the de-energized state of any portion of it results in a fail-safe.

A bypass is a temporary task-specific defeat of a single interlock function or group of functions. Using bypasses to modify the ACS means reconfiguring the interlock system for routine operations. The C-AD Chief Electrical Engineer, the RSC Chair and a member of the RSC must review and approve all bypasses; C-AD ACS Group personnel must record bypass approvals following the procedures in OPM Chapter 4; the C-AD must install bypasses under the authority of the RSC.

3.11.2.Fire Alarm and Fire Protection Systems

The primary documents describing physical fire-protection requirements at C-AD are Fire Hazards Analyses (FHAs) that identify fire hazards and the required physical fire-protection. The following are the key requirements documents used as the bases for the FHAs:

- Standard Building Code (SBC), 1997 Edition
- National Fire Protection Association Codes and Standards
- BNL's ESH Standard 4.0.0 Fire Safety Program, Rev. 0

If the listed codes and standards do not discuss, or do not apply to a specific fire hazard, BNL uses additional documents, such as Factory Mutual Data Sheets, under the direction from BNL's Fire Protection Engineer. The FHA describes any additional documents and the reason for their use.

A consultant completed an FHA for each significant C-AD facility and identified fire hazards and the acceptable level of physical protection, such as fire protection systems and building components in 2007. The consultant performed a second round of reviews in 2011 to identify changes brought about by NFPA Code changes, to help identify legacy fire hazards in pre-1970-wiring, and to verify the status of action items from the prior review. The C-AD posts and maintains the FHAs at the C-AD FHA web page.

Each FHA identifies the required physical fire-protection design features. In many cases, various means are available to meet the general criteria required by the DOE. The BNL Fire Protection Engineer used the following guidelines in selecting the appropriate protection methods:

- Wherever possible, passive protection methods are given preference over active systems
- Fire rated or non-combustible construction, barriers and spatial separation are first reviewed for the ability to achieve the required level of protection before suppression systems are considered
- Non-combustible materials are used wherever feasible to minimize the hazard
- Active suppression systems are provided where required by the referenced documents
- Wherever possible, wet pipe sprinklers are used, dry pipe for potentially freezing areas, and deluge for high challenge systems
- Alarm and detection systems are provided where required by the referenced documents; type of detection is based on the type of fire expected, and the need for sensitivity or fast response, to provide for rapid manual response or effective process shutdown to minimize damage

- Where building Maximum Possible Fire Loss (MPFL) values exceed $50M, buildings are subdivided into fire areas with an MPFL value less than $50M; where this approach is not operationally feasible, redundant fire protection systems are provided
- For facilities where DOE orders or referenced code requirements cannot be met, the need to develop an exemption or equivalency is identified

The main fire-monitoring console resides in the Firehouse, Building 599 where BNL personnel monitor all fire alarm signals, trouble- and communication-status alarms. Additionally, a satellite station at Safeguards and Security, Building 50, receives fire-alarm signals. If the Firehouse does not acknowledge an alarm within 90 seconds, the satellite station at Building 50 receives an audible indication to handle the alarm. A second satellite station at the C-AD Main Control Room, Building 911, receives the fire-alarm signals from the accelerator facilities. A team of operators and an RCT respond if the accelerator is operating. The ESH Coordinator, Collider Accelerator Support, and an RCT respond during accelerator shutdown periods.

3.11.3.Ionizing-Radiation Shielding

3.11.3.1.Earth Berm and Concrete Shielding

A berm is an earthen embankment used as shielding. Figures 3.11.3.1.a and 3.11.3.1.b show earth berms at the C-AD. These particular berms are for the Booster's beam dump and the NSRL line (R line). The former has a cap to prevent rainwater infiltration through activated soil. The photo of the R-line berm shows the standard geo-membrane-type cap typically used for protecting groundwater. Also visible are the ventilation shafts in the R-line berm. Since 2002, C-AD places geo-membrane caps over new shield berms as they are constructed, and an additional layer of soil over the membrane to complete the berm. Grass covers an earth berm shield and their caps to prevent erosion. C-AD inspects berm shields and caps at least annually, and at the start-up and conclusion of each running period. Soil erosion, tree- or shrub-penetration and cap integrity are the main reasons for inspections.

An average density for C-AD earth shielding is 1.8 g/cm^3 or 114 lb/ft^3 for 10% moisture content, as determined from fifteen samples from a variety of locations along the AGS's ring top. The moisture content varied from 4% to 17% by weight of the wet weight.[32] Based on radiation-penetration studies, the mean free path in the C-AD's earth shielding is 0.5 m for high-energy particles. Typical earth shields at the high-energy accelerators range from 3.5- to 7-m thick at the top of a berm and 10- to 20-m at the sides. Thus, attenuation of radiation due to earth shielding is about 10^{-4} to 10^{-2} at the top of the earth shield, and 10^{-6} to 10^{-12} at the sides. The distance from the source adds an additional reduction.

[32] Sand as a Side Shield for 30 GeV Protons, W. R. Casey, G.S. Levine, W.H. Moore and L. W. Smith, Nuclear Instruments and Methods (55) 1967, 253 -268.

Figure 3.11.3.1.a Earth Berm and Cap Used for Shielding, Booster Beam Dump

Figure 3.11.3.1.b Earth Berm and Cap Used for Shielding, R Line (NSRL)

The C-AD uses concrete shielding throughout the accelerator facilities. In some cases, poured concrete forms structures such as the tunnels for AGS and Linac or the hot cells at the RRPL. The AGS is unique in having an earth-concrete mix for shielding known as soil-crete. The C-AD employs ilmenite for some concrete blocks (heavy concrete) that have a density of 3.5 g/cm^3. The C-AD predominantly uses normal concrete with a density of 2.3 g/cm^3, but constructs some areas with heavy concrete to prevent personnel exposure, especially where space is limited. In other cases, normal concrete block forms the walls at RHIC IRs, such as PHENIX and STAR

The area and height of the IRs at RHIC vary. Most locations are equipped with overhead cranes that have direct access from grade. The six- and eight-o'clock areas, STAR and PHENIX respectively, have an assembly building that leads into an IR. Concrete shield walls separate these areas during the running period. The removable walls of IRs are composed of light concrete blocks. When the Collider is circulating the beam, 1.8-m thick blocks form a shielding wall in the IR, separating it from the assembly building (Figures 3.11.3.1.c, and 3.11.3.1.d).

Generally, movable shield-block walls incorporate a small movable plug for personnel access, an emergency-escape labyrinth, and a larger movable door to allow the passage of large elements of the detector between the IR and the assembly area.

Figure 3.11.3.1.c Shield Wall Opening at the STAR Experimental Hall

Figure 3.11.3.1.d Shield Block Wall Enclosure at the STAR Experimental Hall

3.11.4.Ionizing-radiation Monitoring System

To implement the radiation-safety policy at BNL, the C-AD installed an accelerator-facility-wide area-monitoring system. The instruments are simple to operate, and its audio-visual outputs are easy to interpret. C-AD personnel and users with little skill in radiation-monitoring practices can use the instruments to make decisions about their own safety while complying with the rules in BNL's Radiation Control Manual.

The aim of C-AD management is to avoid unnecessary radiation exposures of personnel; using active radiation-detecting devices to alert personnel to existing radiation fields. A radiation-monitoring network covering accelerators, external beam enclosures, target stations, secondary beam enclosures, if any, and the experimental areas is operational when beam is in the accelerators. These instruments detect and evaluate radiation fields in terms of equivalent dose rate, mrem/h, and have been in use for about 25 years.

The common features of these instruments are

- Standard, color-coded meter faces with dose rate scales calibrated in mrem/h
- A single non-linear meter display
- An audio warning activated at 20 mrem/h
- Three colored lamps, triggered individually to correspond to the color-coding of areas of the meter scale. The lights are mounted on the top of the instrument, are pulsed approximately once per second, and may be seen for distances greater than 10 m even in well-lighted rooms
- A momentary push button to check the operation of the dose rate meter and warning lights
- Digitized outputs allowing interface of these instruments with the networks and the ACSs

The C-AD calls these instruments "Chipmunks," and they measure absorbed dose in tissue (joule per gram of tissue or rad). The detector in the Chipmunk is an ionization chamber filled to one atmosphere with propane. The coating on the chamber's walls is 3 mm of epoxy resin, and the ion collector is made of polyethylene. This combination of materials makes the Chipmunk's detector tissue-equivalent in terms of radiation dose. A thin layer of aluminum coats the conductive surfaces of the ion chamber. The C-AD uses the Chipmunk's selectable feedback circuits to change the dose-weighting factor to multiply the absorbed dose in tissue by a factor ranging from 1 to 5 so to account for the mixed neutron-gamma fields produced outside the shielding during the accelerator's operations. The multiplier converts the measured absorbed dose (energy deposited per gram of tissue) into equivalent dose, which is a measure of risk.

The Chipmunk collects the charge produced by ionizing radiation interacting with the propane gas in the ion chamber. The chamber's standard operating voltage is 800 V. If radiation overdrives the Chipmunk's input circuit with large amounts of charge from the ion chamber, then the output logic-circuitry produces a continuous train of pulses. This feature prevents the Chipmunk from jamming, even at very large instantaneous dose rates; this is important in an accelerator environment where large pulses of radiation can be as short as a few hundred nanoseconds.

An ion chamber current of 10^{-13} amps corresponds to one mrad/h. The Chipmunk's digital output logic circuit corresponds to 0.0025 mrad per pulse; that is, it generates one pulse for each picocoulomb of collected charge. The digitizing circuitry is linear in the range of 10^{-13} amps to 10^{-8} amps. Due to ion-recombination effects at high-charge density in the propane, the linear range of the Chipmunk is approximately 1 mrad/h to 5,000 mrad/h. Above this, the Chipmunk begins to saturate; that is, the Chipmunk's response stays at about 5,000 mrad/h, which is 25,000 mrem/h if a dose-weighting factor of five is selected.

The Chipmunk has a time-out circuit to allow it to stabilize following power-up, and prevents accidental alarms and trips on interlock systems. It also has a fail-safe circuit consisting of a missing-pulse detector. This circuit requires a pulse at least every 90 seconds. Failure will drive a relay interlock. Each Chipmunk uses a low-level check source integrated into its housing to provide the fail-safe pulses.

The C-AD keeps records of area dose-rates and routinely examines the records during operations. Additionally, the C-AD saves records of the Chipmunk's alarms and interlocks via the ACSs networked monitoring system.

3.11.5.ODH Alarm and Emergency Ventilation Systems

The C-AD does not expose personnel to an oxygen-deficient atmosphere (<19.5% O_2) under normal working conditions. However, equipment failures can produce such an atmosphere. Such events may occur in facilities that normally use significant amounts of gas, such as helium, nitrogen or sulfur hexafluoride. These include the Tandem van De Graaff accelerator rooms, the AGS Ring, many of the enclosures and support buildings at the RHIC, the ERL, the SBH and the VTF. BNL's SBMS delineates the methodology for assessing and classifying workplaces whereby abnormal conditions potentially could produce an oxygen-deficient atmosphere. The C-AD employs those methods and classifications and uses Class 0 and Class 1; presently, facility designs do not require C-AD to use higher-level ODH Classes during routine operations.

ODH control measures may include warning signs, ventilation, medical approval as ODH-qualified, ODH training, personal oxygen monitor, and self-rescue supplied atmosphere respirator. The C-AD uses signs at all ODH 0 and 1 areas to warn potentially exposed individuals. In these areas, the control is a minimum ventilation-rate during occupancy of at least one volume change per hour. Higher-level controls apply to individuals classified as ODH-qualified. For example, if individuals enter ODH Class 1 areas unescorted, then they must have medical approval from the Occupational Medical Clinic (OMC).

For ODH Class 0 and greater, individuals receive training in oxygen-deficiency hazards and safety measures associated with the specific operation. Retraining is required and training is the responsibility of the C-AD. For ODH Class 1, the C-AD issues Personal Oxygen Monitors (POM) to each entrant. Each monitor has a unique identifying number and a sticker indicating the date due for calibration; calibration frequency is every six months. Individuals also have

ready access to Self-Rescue Supplied Atmosphere Respirators (SRSARs) during their entry. Before entering or working in an ODH Class 1 area, personnel test the operation of their POM and verify the readiness of their SRSARs.

The C-AD lists on its C-AD web pages specific areas where they implement controls for potential oxygen deficiency hazards (ODH).

3.11.6.Design Criteria and As-Built Characteristics for Cryogenic Systems

3.11.6.1.General Design Criteria

The C-AD follows SBMS's requirements in designing pressurized cryogenic systems. Because of the nature of these systems, the mechanical design follows the ASME Boiler and Pressure Vessel Code, Section VIII, and the ASME Refinery Piping Code, B31.3. Design, fabrication and testing are in accordance with these codes. The C-AD uses proprietary computer codes for calculating stress, for example, ANSYS®, LSDYNA-3D®, CODECALC® , or COMPRESS®. All stress calculations undergo an independent engineering check.

For vessels or pipes operating at cryogenic temperatures, the material used retains ductility under these conditions. Ductility prevents cracks or other flaws propagating to catastrophic size. At the RHIC, large helium leaks significant enough to degrade insulating vacuum would increase the refrigerator's heat load, and shut down the superconducting magnets.

Complete, accurate Piping and Instrumentation Drawings (P&IDS) are on record for all cryogenic systems and C-AD maintains them in electronic files. Records change only via Engineering Change Requests/Notices (ECR/ECN), which are part of the C-AD's configuration-management process. C-AD does not allow changes, except in emergencies, in the equipment and piping shown on these drawings without an approved ECR/ECN.

3.11.6.2.As-Built Characteristics for Cryogenic Helium Systems

A 25-kW helium refrigerator provides 4 K supercritical helium gas required for the RHIC. The helium distributes through piping and valve boxes, both of which are vacuum-insulated, plus ancillary warm piping and valves. This piping system carries the helium to and from the main refrigerator, passing out-of-doors into the RHIC Tunnel, where it connects to the superconducting magnets, and into the six service-buildings located near the six experimental areas around the RHIC Ring. About 20 tons of helium is the normal inventory; the C-AD replaces about half this inventory each year due to routine losses.

The Cryogenic Building 1005R houses the refrigerator and is a high bay, steel frame, masonry building of approximately 7,200 square feet, with a volume of about 240,000 cubic feet, The Cryogenic Building includes an 18-foot by 50-foot truck- service platform. Access is through a 12-foot roll-up door. The exterior of the building is comprised of concrete block with five, approximately 16 foot square, openings on the north side through which the Cold Boxes extend.

The Compressor Building 1005H is a one story, high bay, similar in construction to the Cryogenic Building. It is approximately 10,800 square feet in floor area, with a volume of about 200,000 cubic feet. It houses the helium compressors and their associated equipment that pumps compressed helium-gas back to the refrigerator where the gas expands and cools.

Six Service Buildings are used for the RHIC cryogenic system and are metal-frame, pre-engineered structures. The volume of these buildings varies from 75,000- to 113,000- cubic feet. Two Valve Boxes, one for each ring, are located in each Service Building. In addition, the Main Ring magnet power supplies are located in these buildings with their ancillary equipment. The six o'clock Service Building, 1006B, is also the location of a shutdown 700-W helium refrigerator.

BNL's Cryogenic Safety Committee reviewed the Refrigerator and Compressor Buildings and the equipment located in them. BNL accepted the equipment in 1985 for another accelerator project. However, the system lay dormant until 1999, when the C-AD used it for the RHIC.

The Cryogenic Control Room is in the Collider Center, Building 1005S. The RHIC Design Manual describes this control system. This Control Room is scheduled to move to the Main Control Room in Building 911 in the FY11 running period.

Building 1005H houses the mechanical equipment that compresses the helium for the RHIC Helium Refrigerator. One of the hazards in this building is the very high ambient noise levels when the compressors operate. The hazard extends outside the building near the large pipes to and from the refrigerator area. BNL undertook an initial noise survey in this building during the Compressor Acceptance Test on April 10, 1985, finding a uniform noise level of 110 dBA near the compressors. C-AD has recorded additional surveys since 1999 and current results on a web page. Hearing protection in this building is mandatory, and occupancy time is restricted to four hours of exposure per day during normal operations.

Employees with regular access to the building are included in the Laboratory Hearing Conservation Program. Another hazard is the pressure piping that has a maximum working pressure of 275 psi; pressure relief valves and rupture disks protect the system from exceeding it. All major piping meets requirements of ANSI B31.3; the pressure vessels meet the ASME BPVC, Section VIII.

Building 1005H also houses a helium-purifier system. After summer shutdown, and before cool down, the purifier cleans process lines throughout the RHIC ring and at the Cryogenic Facility, removing contaminants with a liquid-nitrogen-cooled heat exchanger and carbon adsorber. There are two parallel trains of them. When one train becomes saturated, operators in Building 1005S isolate it by closing the manually operated helium-process inlet and outlet valves for the heat exchanger and adsorber, and then bring the other online. At this point, operators regenerate the adsorber.

The first step of the regeneration process is to vent the trapped high-pressure helium left inside the system when it was isolated. Venting generates a brief pulse of noise, 120 dBA to 130 dBA, near the exhaust vent on the outside of the building. After venting, operators warm the adsorber with heated nitrogen gas. Because the adsorber initially is cold, the nitrogen gas that vents from the exhaust system is cold, and can create a vapor cloud on the ground around the building depending on ambient weather conditions. This process takes up to two days. Procedures require operators to post the affected outdoor area for noise hazards, and to control access. In 2010, the C-AD designed and installed a noise-reducing valve at 1005S, and inspected the remaining C-AD complex for noise hazards, opportunities for noise reduction, and noise posting. C-AD personnel found several other potential noise areas and implemented protections and postings.

During operational periods, the entire RHIC Tunnel is ODH Class 1, except the STAR and PHENIX IRs. Both STAR and PHENIX have ODH barriers that protect those IRs from gases potentially escaping from the RHIC's tunnel enclosure. All other RHIC IRs connect to the

RHIC tunnel enclosure without ODH barriers. In the RHIC tunnel enclosure and Service Buildings, any one or combination of the following requires people to don escape packs, and an evacuation of the area to outdoors:

- The in-place oxygen monitors activate an alarm. Throughout the complex, the alarm is a blue strobe light accompanied by an audible alarm. In Building 1005H, there is no audible alarm because of the high background noise in Building 1005H, and a red strobe indicates an ODH event.
- A vapor cloud exists inside the ODH area or there is a loud "whooshing" sound
- POMs alarm

Operators rapidly respond to suspected ODH alarms to prevent damaging costly equipment in the RHIC experiments due to automatic starting of fans and pulling in humid outdoor air, and to determine if the alarm is real. A suspected alarm is one that trips only one ODH alarm in a redundant system.

In that case, the OC confirms only one alarm is sounding. If the alarm is in the tunnel, the OC orders the cessation of beam operation in the RHIC. BNL's Fire/Rescue personnel wearing self-contained breathing apparatus first enter the area that has an alarming fixed-oxygen monitor. They take oxygen readings using their own monitoring equipment, and report these findings and any problems (e.g. leaks), observed during their initial entry. If BNL Fire/Rescue measures normal oxygen levels and observes no leaks, the Cryogenic Operations Group then enters and verifies the validity of the ODH alarm. If this Group determines that the alarm is erroneous, then C-AD recalibrates or replaces the ODH sensor, and operations resume.

In a non-redundant ODH alarm system, or if there is any suspicion that the ODH alarm is real, all persons present in ODH 1 areas don their self-rescue air packs, and, in either an ODH 0 or ODH 1 area, they move outdoors. If the accelerator is operating, the OC orders the cessation of beam operation. If the Cryogenic Operations Group determines the source of the leak, they immediately attempt to stop the flow of helium. Should further action require entry into an ODH area, then the Cryogenic Operations Group follows emergency procedures in the OPM. As in the case of suspected ODH alarms, BNL's Fire/Rescue personnel wearing self-contained breathing apparatus first enter all ODH areas that have alarming fixed-oxygen monitors, and take oxygen readings using their own monitoring equipment, and report the findings observed during their initial entry. Once the leak is located, the Cryogenics Operations Group stops the flow and employs the exhaust fans to supply fresh air. The C-AD uses work planning to repair the failed equipment. To determine its root cause, the extent of the condition and the lessons learned in an ODH evacuation event, the C-AD employs its Departmental critique program and the DOE's Occurrence Reporting System, if required.

3.11.7.Design Criteria and As-Built Characteristics of TVDG SF_6 System

In any large high-voltage equipment, the presence of extremely high potential gradients necessitates employing an insulating medium for stable operation. Accordingly, the C-AD encloses the high voltage structures of a Van de Graaff accelerator within large vessels pressurized with insulating gas. These vessels are code stamped, meeting the ASME Boiler and Pressure Vessel Code, Section VIII, Division I, with a maximum rated pressure of 300 psig. Overpressure relief valves rated at 250 psig are located on the main fill-line and on each vessel.

Each of the TVDG accelerators, MP6 and MP7, are located in Building 901A. Each accelerator pressure-vessel has a volume of 11,250 ft^3 and contains an insulating gas mixture at a

nominal operating pressure of about 12 atmospheres. The gas mixture is composed of roughly 45% SF_6, 45% N_2, 5% CO_2 and 5% O. The C-AD does not release the gas mixture routinely. TVDG Operators scavenge the gas mixture in each vessel down to a pressure of 1000 micron (1 torr) and store it before backfilling the vessel with air to allow staff to enter.

The TVDG's insulating-gas storage facility is located atop a hill, which rises north from the Building 901A roof and crests at Building 704. This structure is separate from the 901A structure. It consists of two opposing banks of high-pressure gas-storage cylinders with an intervening concrete structure allowing access to the gas system. Each bank consists of three buried layers of cylinders separated by earth, with the upper layer 42 inches below grade.

The gas-handling system can move large amounts of insulating gas safely and quickly between the accelerators's pressure vessels and the insulating gas-storage facility, handling all phases of gas pumping in four hours. To avoid temperature-shocking the glass and metal accelerator tubes and column structures within the TVDG pressure vessels, the maximum rate of temperature change is 10 ^{o}F/h, with a maximum gradient along the accelerator structures of 10°F. Hence, there is one external and two internal heat exchangers for each accelerator to provide heating or cooling to the insulating gas as necessary.

The two major considerations for personnel safety are the physical hazards associated with a rupture of a system's component due to over-pressure, and the ODH posed by the insulating gas. To minimize these hazards, the gas-handling system includes several safety features:

- Written procedures for all phases of gas transfers
- Automatic pressure control
- Flow-control valves at key points
- Use of over-pressure relief devices throughout the system
- Keyed locks and micro-switches to ensure that a vessel is secured prior to pressurization
- ODH monitoring and alarms

The C-AD tests relief valves every five years. All TVDG accelerator-room relief valves discharge to their immediate locale. Mechanical-equipment-room relief valves vent external to the building to eliminate areas at TVDG that have a potential to be greater than ODH Class 1. Automatic isolation-ball valves and overpressure relief-flanges are located at beam-line and accelerator penetrations to halt gas flow should an accelerator tube rupture. The valves actuate upon loss of vacuum in the accelerator tubes. The overpressure relief flanges prevent pressurization of the beam-lines while the ball valves are closing.

To alert personnel of an oxygen-displacement hazard, fixed oxygen sensing and insulating-gas detection equipment constantly monitor ambient conditions. In particular, an SF_6 detection system monitors the gas-storage facility and various locations in the TVDG accelerator rooms with sensitivity adjustable down to 10 ppm. Oxygen monitors on both the main level and the pit level of the accelerator rooms and in the adjacent mechanical equipment room alarm below 19.5%. Should any unusual levels of oxygen or SF_6, be detected, these systems alert operations personnel immediately. An operator then can initiate emergency procedures in the OPM.

If the SF_6 alarm activates, then the situation is likely to be a minor gas leak, i.e., a maintenance problem rather than an emergency. After checking to ensure that there is no indication of oxygen deficiency, operators enter the affected area. As a precaution, they carry portable oxygen- and halogen-monitors and two-way radios while locating and isolating the leak. If a single oxygen-monitor alarms, with no other evidence of a gas leak, it is likely that the

monitor is giving a false alarm and requires service. After activating a high-speed purge-ventilation-system and notifying the Local Emergency Coordinator, operators may enter the affected area, carrying the same safety equipment as for an SF_6 alarm. In each of the above cases, operators initiate emergency-response actions if portable monitors indicate an oxygen deficiency.

If an operator hears both an oxygen-monitor alarm and an SF_6-monitor alarm, or hears an audible leak or a second oxygen-monitor alarm, then the operator treats the situation as an emergency and notifies Laboratory Emergency Response personnel. The operator initiates the high-speed purge-ventilation, and notifies the Local Emergency Coordinator. TVDG operators make an announcement over the PA system, and alert the MCR, and F&O ISM that a dangerous asphyxiating condition may exist; F&O ISM are notified since asphyxiating gas might accumulate in the manholes in the area.

During an emergency, occupants evacuate the building; people outside the immediate area are unlikely to be at risk of asphyxiation. The building's ventilation system does not circulate air from the accelerator rooms into the office and laboratory areas. Although there are some connections to low lying areas of the building via cable-tray passageways and under doorways, normal building ventilation, combined with mixing with room air prevents concentrations from reaching hazardous levels. The primary purpose of evacuating the building is to ensure that individuals do not enter affected areas, and to avoid them interfering with emergency responders.

In certain applications, SF_6 can decompose in an electric discharge, producing toxic reactive compounds such as S_2F_{10}. There is no evidence that these compounds exist in harmful concentrations in the insulating gas of an accelerator vessel. The activated alumina drying towers through which the insulating gas of the TVDG accelerators constantly circulates effectively scrub these compounds. Independent documented toxicity tests of the gas mixture from the TVDG vessels reveal no evidence of toxicity.

3.11.8.Design Criteria and As-Built Characteristics of Soil Caps

BNL documented the design criteria for soil caps in SBMS's "Design Practice for Known Beam-Loss Locations." An example of a pre-operations cap is one that the C-AD placed over the g-2 beam stop at the end of June 1998 (Figure 3.3.2.8.c). Additionally, a large concrete apron extends several acres in the V target area and supports the beam stop and the irradiated soil between the cap and beam stop. Fifty caps exist at the C-AD and most are the structural floors of buildings made of 0.3-m thick concrete or greater.

An example of a post-operations cap is that placed over VQ-12 magnet location following the detection of tritium in groundwater down gradient of the g-2 area in 1999 (Figure 3.8.11.a). Another example is the cap at the BLIP.

Figure 3.8.11.a Gunnite Cap Installed Above the VQ-12 Magnet in 12-1999

A 1999 radiation survey found the last quadrupole in the V-line, the VQ-12 magnet, activated to a level of 3000 mrem/h at contact on its upstream end, and 1500 mrem/h on its downstream side. Other magnets in the V line had much lower radiation levels, of about 10-mrem/h. The C-AD's physicists determined activation in the soil shielding had spread outward from VQ-12 magnet to a radius of 10 m or more. High-energy neutrons and protons created by striking the VQ-12 magnet with the AGS's high-energy proton beam had gone directly into the soil shielding. Furthermore, as much as 15% of the proton beam was lost at VQ-12. Soil samples taken near the VQ-12 magnet on November 8 and 10, 1999 showed a total activity in soil for sodium-22 of 400 mCi. Based on the known ratio of sodium-22 to tritium production in soil, the soil had contained more than 130 mCi of tritium. The VQ-12 magnet was not an area of expected beam loss, so no cap existed in the area over VQ-12 prior to the discovery of beam loss. The C-AD capped the soil in that area in mid-December 1999 to prevent rainwater infiltration into the activated soil.

However, tritium had already moved into the groundwater via rainwater that percolated through the activated soil. The tritiated rainwater penetrated the concrete base-pad near VQ-12 through small penetrations in it. The C-AD engineers had removed a 3-foot by 200-foot strip of base-pad in that area to allow them to install an iron sheet-pile wall during g-2 construction.

They resealed the concrete base-pad on the sheet-pile's side that faced the V target hall, but not on the side facing the soil. The iron sheet-pile wall penetrates 13 feet below the concrete base-pad near VQ-12, and up to 26 feet at other locations. This penetration provided a conduit for tritiated rainwater to move quickly into the groundwater below the VQ-12 area.

The large angle of the g-2 soil berm at this location prevented the use of standard geo-membrane-type materials for protecting the groundwater. Therefore, the C-AD installed a 12-cm thick Gunnite cap extending over an area of 2400 ft^2. Gunnite is the best material for a cap because it is easy to install, and has a high strength approaching 5000 psi, which is characteristic of reinforced concrete. As an added feature, C-AD capped the Gunnite with EDPM rubber, viz., standard roofing membrane.

Another post-operations cap is the one placed over BLIP target at Building 931B in 1998. Sampling BNL's groundwater monitoring wells revealed tritium leaching from the soil near the underground BLIP target Cooling-Water Tank. Managers at the BLIP installed caps and a roof-drain system to keep rainwater from infiltrating activated soil in this area. The cap includes the concrete floor of the BLIP building, a Gunnite cap along the north and west sides of the building, and an asphalt cap on the south side.

The C-AD inspects all caps at the start-up and conclusion of each experimental running period; that is, twice per year, and reviews the following items during cap inspections:

- Surface cracks or other penetrations in Gunnite caps
- Holes or tears in geo-membrane fabrics
- Integrity of seals near penetrations such as fence posts, walls, sheet pile
- Excessive ponds of rainwater on cap structures or on nearby paved areas
- Trees or woody shrubs whose roots can damage the cap
- Soil erosion that could compromise the structural integrity of the caps

3.11.9.Design Criteria and As-Built Characteristics of Power Distribution

3.11.9.1.Design Criteria for Power Distribution

The C-AD follows the National Electric Code for designing substations, transformer yards, and power distribution. Hazards associated with substations and transformer yards are electric shock, electrical short, arc-blast, oil spill, fire, and waste disposal. The C-AD relies upon personnel training and qualification, routine inspection, routine maintenance, PPE, and containment to mitigate these hazards. C-AD selects proper fuse ratings, circuit breaker settings, and set points to coordinate protection against faults and over loads. The nominal ambient-operating temperature limit is 40 ^{o}C, and, where necessary the C-AD installs internal heaters. Supporting systems include batteries, the power-monitoring system, ground-fault monitoring systems, and an oil/water separation weir.

The C-AD monitors and IFM maintains a routine inspection-schedule for substations, transformer yards, diesel generators, and circuit breakers. Maintenance procedures follow industry standards. Normal power from the power distribution system is not required for accelerator safety systems; however, systems that maintain property protection or prevent property loss, such as cryogenic controls, use emergency power.

To minimize fire hazards, the transformer tanks contain mineral- or silicon-oil; trained line crews or an outside oil-vendor handle this oil. The C-AD requires bi-monthly inspections of the substation for oil leaks or spills. If transformer oil reaches soil or trap rock, the C-AD

removes them and puts them in containers for disposal. The C-AD follows industry standards for handling oil and oil waste.

3.11.10.Design Criteria for Cooling Systems

Figure 3.11.10 depicts a typical two-part water-cooling system used in most C-AD installations. The process-water side pulls heat from the load, and transfers it to through a heat exchanger to the cooling-tower-water side that dissipates the heat to the air via the tower.

Several sources generate the heat load on the process-water side. Heat can be from electromagnets, power supplies, electronics racks, or power-buss cooling systems. Process-water side systems are closed-loop. The C-AD monitors the water level in expansion tanks, and uses a programmable logic controller (PLC) system to measure water levels, and open and close the valve in a makeup-water line at specified levels. In addition, the PLC activates alarm signals for system operators to check to determine the severity and source of any water loss. The water systems automatically shut off upon start of a second-level low-water alarm.

On the cooling-tower-water side, systems can be either a closed loop or open loop inside the towers, but both types have basins open to the air. BNL's sub-contractors treat basin water with biocides and rust inhibiters; some have ozone-treated water systems, while a few have no treatment at all. In all cooling-tower installations, blow-down lines go either to the sanitary system, or to storm drains that lead to recharge basins through water-monitoring stations.

The C-AD designs cooling-water piping systems to ASTM-, ANSI-, ASME-, or MSS-standards, based on which apply. The C-AD applies the requirements in Suffolk County Article 12 to all water systems that contain hazardous materials, including radioactivity. If the C-AD determines that the radioactivity level is above the Drinking Water Standard, the C-AD submits plans and specifications to Suffolk County, installs impervious secondary containment, institutes high-level alarms to prevent overfilling, and conducts regular documented inspections.

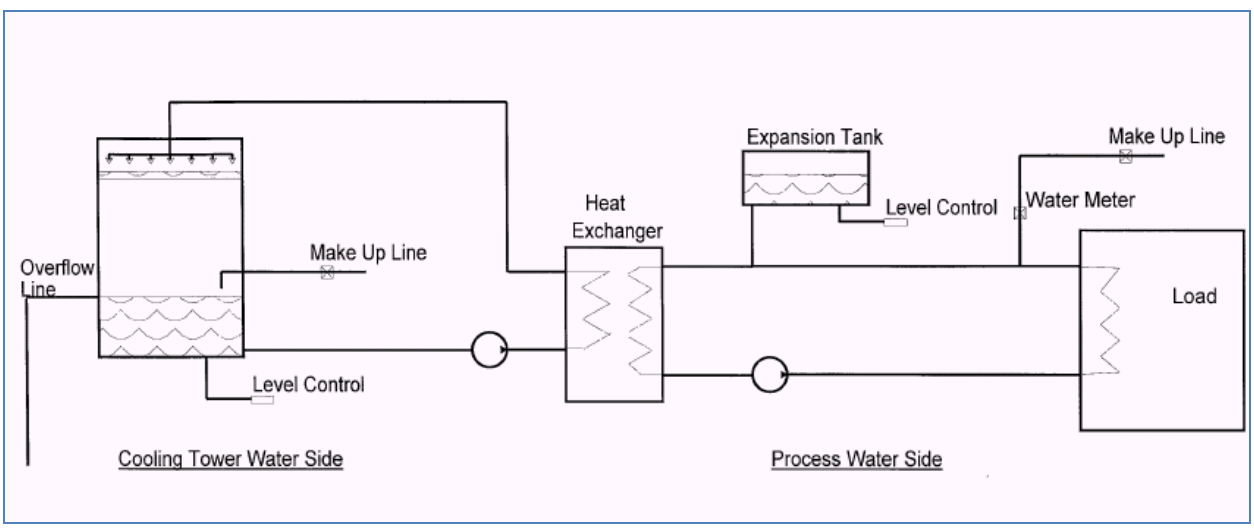

Figure 3.10.11 Typical Two-Part Cooling-Water System at C-AD

The C-AD's operations potentially could to activate process-cooling water since several dedicated process-cooling-water systems distribute water inside the beam's enclosures, supplying

cooling water to magnets, targets, and RF cavities. Additionally, process-cooling-water systems route through the beam enclosures to reach outlying buildings. For example, chilled-water piping passes through the AGS ring's enclosure to the fan houses to provide air-conditioning. Before disposing of all process-cooling water, the C-AD samples it for radioactivity and metals, using "Chain-Of-Custody" formality to obtain samples.

Process-cooling water in about one-third of C-AD's cooling systems may contain 12.3-year half-life tritium and trace amounts of other shorter-lived radioactivity, e.g., 53-day Be-7, or 14.9-hour Na-24. The C-AD polishes process-cooling water by ion exchange, employing this methodology because ions create electric fields around brass connections that, in turn, dissolve away the brass causing leaks.

Sometimes major changes to process-cooling-water systems may occur; then, the C-AD holds process-cooling water in tanks and returns it to the system after the modification. This practice reduces the volume of C-AD's tritium-waste streams.

Any leaks from activated process-cooling-water systems collect in a network of floor drains. Process-cooling water entering the floor-drain system goes to the sanitary-sewer system or sumps. The C-AD alarms its sumps using water-level indicators. The C-AD moves sump water to portable storage-tankers, and sends samples to certified laboratories for metals and radioactivity analysis. In some areas, such as the Booster and the experimental area in Building 912, water leaks go directly to BNL's sanitary wastewater treatment facility, where holdup ponds can hold the water if necessary. However, the total tritium in all C-AD process-cooling-water systems is less than 40 mCi, and this level is unlikely to cause measurable activity concentrations at the sanitary system's outfall should activated water make its way to the floor drains. To put this amount of tritium radioactivity in perspective, a single biomedical study on a research subject or patient may involve a research subject or patient excreting 50 mCi of tritium into a sanitary system.

The secondary side of closed-cooling systems is well-water and cooling-tower water, which C-AD treats with standard water-treatment chemicals (rust inhibitors and biocides) or ozone. Under normal conditions, the secondary-side water does not contain tritium. BNL relies on a site-wide sub-contractor to manage the standard water-treatment chemicals used in BNL's cooling-tower waters. The C-AD monitors all of the automatic systems used to add rust inhibitors and biocides, and manages systems that use ozone, which precludes using chemical additives. Secondary or cooling-tower waters go to recharge basins onsite; BNL monitors these recharge basins to ensure that water treated with chemicals is released within the limits of the SPEDES discharge permits.

3.11.11.Design Criteria and As-Built Characteristics of RF Systems

Particle accelerators may require RF power of many megawatts. In normal use, the RF hazards to personnel are negligible compared to those from ionizing radiation. The C-AD uses design criteria for RF systems in BNL's SBMS that include

- Providing shielding and other control measures to minimize radiation leakage
- Guarding exposed dummy loads to prevent burns
- Providing adequately sized electrical ground connections to dissipate energy
- Eliminating sharp edges or points on equipment to avoid corona discharge
- Where possible, there are bypass capacitors on control power- and instrument-leads that enter the RF compartment to control leakage without interfering with proper operation

The C-AD protects workers potentially exposed to x-rays from high-power RF equipment, klystrons, and accelerating cavities by an ACS and by local shielding. The C-AD restricts access to areas where high-powered RF equipment is used. The RHIC's RF accelerating system is located in Buildings 1004, 1004A, and the 4 o'clock sector (4z1) of the RHIC tunnel section. The cavities are an x-ray hazard estimated at 100 rem/h maximum for each accelerating cavity and 200 rem/h maximum for each storage cavity. The C-AD made these radiation measurements under high-field emission conditions.

The C-AD allows power to the RF cavities after sweeping the 4z1 zone in the RHIC tunnel clear of personnel (Figure 3.11.11). A trained two-person team undertakes the sweep using a checklist. After clearing the area, operators use the sweep reset-keys to reset the area to allow power to the cavities. Before the sweep, the team assures that the RF critical devices are safely off.

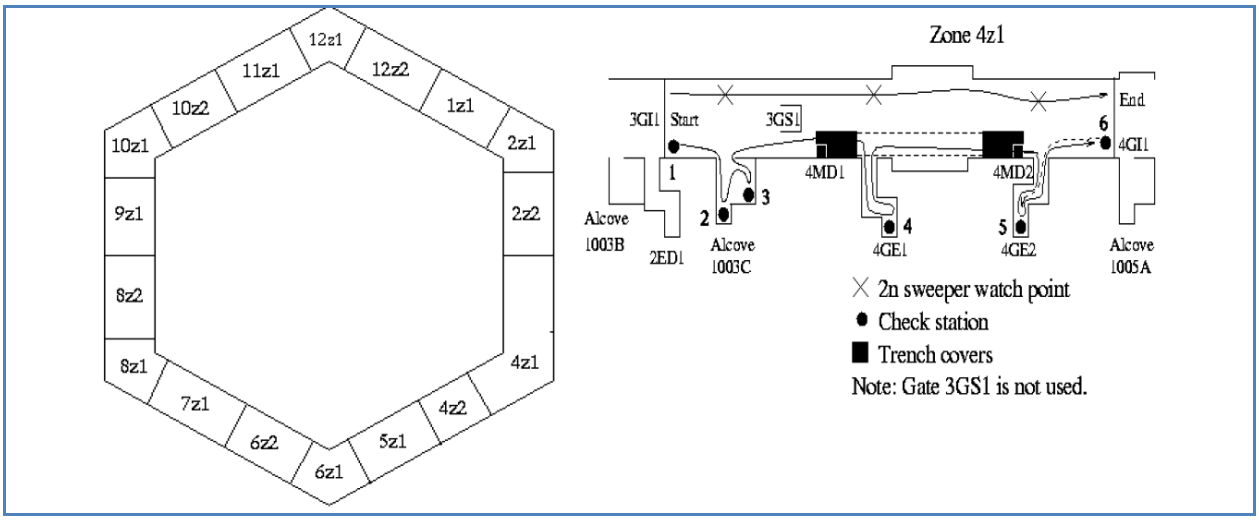

Figure 3.11.11 Sweep Routine for Enclosure to Powered RF Cavities at RHIC

3.11.12.Design Criteria and As-Built Characteristics of Vacuum Systems

Typical beam vacuum systems at C-AD consist of sections of vacuum chambers isolated from the adjacent sections with electro-pneumatic gate valves. Appendages to the vacuum chambers are vacuum pumps and vacuum gauges. The use of vacuum systems provides a friendly environment for the circulating beam. Failure of vacuum is safe in that a beam will abort and not cause damage to the other accelerator components and the environment. C-AD designs vacuum spaces with relief valves and burst disks so that they will not pressurize above 15 psi if it is possible to backfill pressurize a vacuum pipe with helium or other gases in a pressure-boundary failure event.

All the vacuum chambers are stainless steel, Inconel or aluminum. These materials have good mechanical and vacuum properties and are radiation resistance.

C-AD employs work planning and procedures for removal and installation of vacuum chambers. A few vacuum chambers and windows are made of beryllium because of its transparency to energetic particles. C-AD allows the handling of the beryllium vacuum parts according to C-AD procedures and SBMS requirements.

There are two types of vacuum pumps, the roughing pumps and the high vacuum pumps. The roughing pumps consist of a turbo-molecular pump backed by a mechanical pump. C-AD uses these during the initial pump down of the vacuum systems. There are no significant emissions resulting in personal hazards or environmental pollutants in the operation of the roughing pumps. For high vacuum pumps, C-AD uses sputter ion pumps powered remotely with 200 mA, 5 kV ion pump controllers. There is no inherent hazard in the operation of these systems as they meet the NEC.

Several beam pipe systems, such as Booster and RHIC rings, require bake out at elevated temperatures, typically 250 ^{o}C, in order to outgas the beam pipe for operation at greater vacuum. The main hazards during bake out periods are the use of high voltage and the potential for burns and fire. C-AD follows NEC and NFPA codes in the design of these bake-out systems, and uses work planning and procedures for operations. Trained personnel post the local areas where bake-out occurs and send a notification to the Fire Captain. The notification describes the location and length of the bake out period. Bake out periods may last for several weeks. Beam pipe bake outs occur infrequently, and usually occur only at the startup of a new or significantly modified vacuum system.

3.11.13.Design Criteria and As-Built Characteristics for Radioactive Materials Storage

Building 974 is a single-story 22,500 square foot rigid-frame structure housing suspect radioactive concrete, or equipment. The C-AD also uses Building 974 for the tritiated-water storage tanker trailers, and tritiated water drum and resin storage. The structure has a secondary containment foundation system. In addition, BNL followed the requirements in Suffolk County Article 12 for the water storage areas, the AISC, AWS, RCRBSJ, ASTM, SSPC, ANSI and NFPA standards and codes in constructing the building.

The C-AD operates many cooling water systems to support the operations of the various accelerators, collider, and experiments within the complex. Some of this cooling water contains low-level amounts of tritium. To reduce the volumes of liquid waste, the C-AD stores activated water in tanker trailers for potential reuse. This recycling is a pollution-prevention waste-minimization activity, a desired goal of BNL's Environmental Management System.

The C-AD water processes, including tanker use, adhere to the Environmental Management System requirements. Each water process has an associated Environmental Management Program, an Environmental Training Program, and procedures and operational controls.

Building 974 meets all Article 12 requirements; its roof keeps rainwater out of the tanker's secondary containment system. The floors are impermeable to water and are sloped toward a trench that can hold 110% of the volume of any tanker. The facility is equipped with communications for alarms, and a steam heater to protect the tankers from freezing.

The C-AD treats wastewater in Building 974 including applying steam heat to the water in the tankers. The DOE's BHSO per letter from Michael Holland to Thomas Sheridan dated January 2, 2003 approved this waste treatment process. The C-AD uses three 7000-gallon tankers to hold radioactive water removed from cooling-water-systems. Applying hot steam evaporates tritium-contaminated cooling-water from the tankers, creating an airborne vapor emission. The C-AD reviews this process in accord with NESHAPS requirements, and so treats the water following a set of BNL and C-AD controls and procedures. C-AD procedures protect

the workers, public, and environment, and assure compliance with applicable regulations, such as Suffolk County Article 12.

C-AD has located a dedicated area for low-level radioactive waste packaging in the former Bubble Chamber Facility, Building 960; it serves as a radioactive and mixed waste packaging area. The C-AD stages waste storage bins (B-25, B-12, B-52 bins, and 55-gallon drums) therein for routine waste packaging. The RCTs survey full bins, and the C-AD characterizes the radioactivity and completes the required paperwork. BNL's Waste Management organization picks up completed bins for final shipment. The C-AD uses an adjacent area for sorting waste, cutting and sizing materials, for decay in storage, and as a solid mixed-waste satellite area. All work in these buildings complies with the requirements of BNL's SBMS- and the C-AD-procedures.

BNL discourages the discharge of tritiated water to the sanitary sewer. Should C-AD be unable to re-use cooling water in tankers, unable to evaporate it in accordance with approved C-AD procedures and NESHAPS, and it meets SBMS- and SPEDES-discharge requirements, then C-AD releases it in a controlled manner to the sanitary-sewer system.

Building 801 contains three 500-gallon liquid waste hold-up tanks where C-AD collects aqueous radioactive waste prior to its acceptance at BNL's Waste Management Facility for treatment. The C-AD moves it to interim storage prior to offsite disposal or has it solidified before shipping it to offsite disposal. The C-AD adjusts the pH of the liquid in the 801 tanks to maintain parameters in a desirable range.

Building 931 contains two tanks. One is the cooling water tank that provides shielding for the BLIP targets; it is not a waste tank. The second is BNL's tank 931-B-04 that it inside and underground Room C; C-AD uses this tank for temporary storage for the target-cooling system's process water and other waste liquid (e.g., floor mopping water, target water sample water, decontamination water). This tank is double-walled, fiberglass-coated, stainless steel, with a nominal capacity of 550 gallons. The C-AD has a level indicator, high-level alarm, and two leak-detection systems in place for the tank.

4. Chapter Four, Safety Analysis

Table of Contents

4. Chapter Four, Safety Analysis 1
4.1. Introduction 4
4.2. Safety Analysis Approach 4
4.2.1. General Approach to Risk Minimization 5
4.2.2. Risk Minimization Approach for Radiation Hazards 7
4.3. Hazard Identification and Qualitative Safety Analysis 7
4.4. Conventional- and Environmental-Hazards 8
4.5. Radiation Hazards 9
4.5.1. Source Terms and Calculated Radiation Fields 12
4.5.2. Preventing Exposure to Primary Beam and x-rays from HV Devices 14
4.5.3. Beam Faults and Chipmunks 17
4.6. 200-MeV Linac Shielding Analysis 18
4.7. Electron Beam Ion Source (EBIS) Shielding Analysis 22
4.8. TVDG and TtB Line Shielding Analysis 27
4.9. Booster Shielding Analysis 28
4.10. NASA Space Radiation Laboratory (NSRL) Shielding Analysis 33
4.11. Alternating Gradient Synchrotron (AGS) Shielding Analysis 36
4.11.1. U-Line for AGS Experiments Shielding Analysis 41
4.11.2. AGS to RHIC (AtR) Transfer Line Shielding Analysis 41
4.12. Collider (RHIC) Shielding Analysis 45
4.13. ERL Shielding Analysis 49
4.14. Induced Residual Activity 57
4.14.1. Activated Cooling Water 60
4.14.2. Soil Activation and Groundwater Contamination 62
4.15. Radiation Hazards at BLIP and RRPL 64
4.15.1. Prompt Radiation Hazards at BLIP 64
4.15.2. Radioactive Materials Hazards at BLIP 64
4.15.3. MCI for BLIP 65
4.15.4. Monitoring of, and Access to BLIP Radiation Hazards 66
4.15.5. Activated Cooling Water at the BLIP 66
4.15.6. Target Radioactivity in Cooling Water at BLIP 67
4.15.7. Cooling System Failures at the BLIP 67
4.15.8. Environmental Impacts from Water Releases at the BLIP 68
4.15.9. Soil Activation at BLIP 68
4.15.10. Credited Controls for Soil Activation at BLIP 69
4.15.11. Routine Airborne Activation and Emissions at BLIP 70
4.15.12. BLIP Target Gas Emissions 72
4.15.13. Particulate Emissions at the BLIP 72
4.15.14. Transporting Radioactive Materials from the BLIP 72
4.15.15. RRPL Radiological Hazards 73
4.15.16. RRPL Environmental Radiological Hazards 75
4.15.17. RRPL Accident Scenarios 75

4.15.18. RRPL and Inadvertent High-Level Radiation Exposure to Personnel 76
4.16. Oxygen-Deficiency Hazards 78
4.16.1. TVDG Oxygen-Deficiency Hazards 82
4.16.2. AGS Oxygen-Deficiency Hazards 83
4.16.3. g-2 Experiment (V-Line) Oxygen-Deficiency Hazards 84
4.16.4. RHIC Oxygen-Deficiency Hazards 84
4.16.5. ERL Oxygen Deficiency Hazards 88
4.16.6. Small Blockhouse Oxygen-Deficiency Hazards 88
4.16.7. Large Vertical Test Area (VTA) Oxygen-Deficiency Hazards 89
4.16.8. BLIP/RRPL Oxygen-Deficiency Hazards 89
4.17. Electrical Hazards 89
4.17.1. AC Distribution 90
4.17.2. High Voltage DC 90
4.17.3. High Current, Low Voltage 90
4.17.4. RF Voltages 91
4.18. Fire Hazards 91
4.19. Hazard Controls 92
4.19.1. Radiation Protection 92
4.19.2. Permanent Shielding and ALARA Dose 92
4.19.3. Permanent Shielding Materials 93
4.19.4. Radiation Detection and Radiation Interlocks 93
4.19.5. Control of Radioactive Materials and Sources 94
4.19.6. Portable Radiation Monitors 94
4.19.7. Frisking Instruments 94
4.19.8. Personnel Dosimetry 95
4.19.9. Access Controls Systems 95
4.19.10. Control and Use of Hazardous Materials 96
4.19.11. Electrical Safety 96
4.19.12. Lockout/Tagout Program 96
4.19.13. Safety Reviews and Committees 97
4.19.14. Training 97
4.19.15. Personal Protective Equipment 97
4.20. Significant Environmental Aspects and Impacts 97
4.21. Hazard Reduction Associated With Waste Generation and Handling 99
4.22. Fire Detection, Egress, Suppression, and Response 99
4.23. Routine Credible Failures 99
4.24. MCIs, Credited Controls, Credited Control Supports 100
4.24.1. MCI for Beam Fault Incidents and Credited Controls 100
4.24.2. MCI for Fire Incident and Credited Controls 101
4.24.3. MCI for Electrical Incident and Credited Control Support 102
4.24.4. MCI for ODH Incident and Credited Controls 103
4.24.5. MCI for Dispersible Radioactive Materials and Credited Controls 103
4.25. Risk Assessment to Workers, the Public, and the Environment 105
4.25.1. Radiation Risks 105
4.25.2. Infectious Microorganism Risks 106
4.25.3. Environmental Risks from Radiation 106

4.25.4. Environmental Risks from Biological Materials 106
4.25.5. Fire Risks 106
4.25.6. Electrical Risks 107
4.25.7. Injury Risks 107
4.26. Professional Judgment Issues 108
4.27. Methods Used in Evaluation of Radiological Hazards 108

Index of Tables and Figures

Table 4.2.1 Risk Matrix 6
Table 4.5.2.a Transverse Dose Rate for Full Primary Beam Loss 14
Table 4.5.2.b Dual Critical Devices for C-AD Enclosures 16
Table 4.5.2.c Absorbed Dose Rate near x-ray Sources 17
Table 4.6.1 Summary of Radiation Levels for Linac 21
Table 4.7 TVDG Measurements of Dose Rate from Deuteron Losses 23
Table 4.8 Calculated Radiation Levels in the TVDG Accelerator Room and the TtB 28
Table 4.9.a Summary of Booster Ion Beam Flux and Ion Beam Loss 29
Table 4.9.b Summary of Booster Flux Loss and Radiation Levels 30
Table 4.9.c Skyshine Dose for Booster Operation 33
Table 4.10.a Summary of Routine, Maximum, and Faulted Beam for the NSRL 34
Table 4.10.b Annual-Activity Released at NSRL 35
Table 4.11.a Summary of Operational Beam Loss Assumptions for AGS Ring 36
Table 4.11.b Proton Beam Loss and Location in the AGS Ring 37
Table 4.11.c Thickness of Top Shield 37
Table 4.11.d AGS Radiation Level Summary 39
Table 4.11.e Fault Levels at AGS Ring Penetrations 39
Table 4.11.2.a Annual Equivalent Dose at RHIC Scaled for Intensity Upgrade 42
Table 4.11.2.b Fault Equivalent Dose Rates 43
Table 4.11.2.c AtR TLD Data from Run 10 44
Table 4.13.a Parameters of the Prototype ERL in Building 912 51
Table 4.13.b Dose Outside Prototype ERL Enclosure for 3.5- and 25-MeV Electrons 53
Table 4.13.c Skyshine Dose-Rate Estimates From 25 MeV Beam Loss 54
Table 4.13.d Estimated Maximum Dose Rates and Fault Dose to Worker Near Penetrations .56
Table 4.14.b Locations of High-Intensity Loss in the AGS, and Activation Levels (R/h) 59
Table 4.14.c Typical Radioactivity in the C-AD's Closed Cooling-Water Systems 61
Table 4.15.9 Measured Soil Activation at BLIP 69
Figure 4.16.a Graph of the Fatality Factor 80
Table 4.16.b ODH Class and Fatality Rate 81
Table 4.16.c ODH Controls 81
Figure 4.16.d ODH Controls for Acute Effects of Oxygen Deficiency 82
Table 4.16.1 TVDG/TtB ODH Classifications 83
Table 4.16.4 - ODH Classification for Collider Buildings During Normal Operations 86
Table 4.16.5 Potential ODH Areas at ERL 88
Table 4.16.6 ODH Calculation Results for Small Blockhouse in B912 89
Figure 4.25.1 Decline in Radiation Worker Collective Dose (Person-Rem) 105
Figure 4.25.7 Annual DART and TRC Rates at C-AD 107

4.1. Introduction

The starting point for a safety analysis is a documented process to identify systematically all the hazards of a given operation. The C-AD accomplished this initial step using the C-AD Hazard Screening Tool and the C-AD Design Review Questionnaire employed for facility modifications since 2008, and through other methods for facilities built before 2008. The next step in a safety analyses is to describe and analyze the adequacy of measures taken to eliminate, control, or mitigate the hazards and risks of normal operation; the C-AD documented this information in Chapter 3. The final step in a safety analysis identifies potential accidents and assesses their associated likelihood and consequences; the C-AD documented this information in this Chapter 4.

The C-AD based the design of the ion injectors, accelerators, collider, and experimental facilities on the experience and successful designs employed since the initial proposal for the AGS in 1953. The basic approach for the safety analysis has been to review the potential hazards for each accelerator and accelerator facility at the C-AD. Safety analysis is the standard method for applying the DOE's graded approach for minimizing risk. It is well suited to identifying and understanding risk because it requires considering both the likelihood and the potential consequences of exposure to hazards; the product of the two constitutes the risk. In using risk as the measure of acceptance, the allowable consequences for low-likelihood events are higher than the high-likelihood ones. In the safety analyses presented in this chapter, the approach is to evaluate the risk and identify preventive and mitigating features and controls that ensure that risk is acceptably low. In some cases, the C-AD uses Credited Controls to help ensure acceptable risk. Because the C-AD follows consensus codes and standards listed in Section 3.3.1 of Chapter 3, the C-AD adopted the practice defined in the Accelerator Safety Order Guide and did not undertake safety analyses of standard industrial hazards. The C-AD controls their risks by complying with regulations; however, C-AD performed detailed safety analyses on several non-standard industrial hazards, viz., fire including explosions, ionizing radiation, oxygen deficiency from large quantities of inert gases, and electrical hazards because the extent or degree of these hazards was considered non-standard.

4.2. Safety Analysis Approach

Safety analysis includes identifying and screening hazards, assessing the potential consequences of unmitigated risk, identifying relevant, effective mitigation/preventive measures, and finally, assessing mitigated risk. Safety analysis clarifies risk, supporting informed decisions of risk acceptance. It is desirable to show that the risks from the C-AD's accelerator and accelerator facility are in the "extremely low" category; the C-AD has done so in this section of the SAD. The process of identifying hazards employed several sources: The C-AD's design and operating information; BNL's site documents; facility walk-downs to identify potential hazards that could adversely affect workers and environment; and, discussions with the engineers and users of the facilities. The safety evaluation largely is qualitative assessment of potential credible accidents or impacts in terms of hazards, initiators, likelihood estimates, preventive- or mitigating-features, and finally, estimates of the consequences to the public, the environment, and workers. The C-AD reached gross estimates of likelihood and consequences, so focusing attention on those potential accidents that are of greatest concern or pose the highest risk. The C-

AD generated a maximum credible incident scenario for the unique accelerator hazards in the complex discussed later in this chapter, the consequences of which bound all those to workers, the public, and the environment. The findings from these safety analyses confirm that the potential risks from accelerator operations and maintenance are extremely low.

The hazards at C-AD are similar to those present at all high-energy ion- and electron-accelerators and experiments, and are as follows:

- Ionizing radiation
- Non-ionizing radiation
- Hazardous and toxic materials
- Bio-hazards
- Chemicals
- Electrical energy
- Magnetic fields
- RF fields
- Potential energy hazards, such as pressure, vacuum, material lifting, heights
- Kinetic energy hazards, such as rotating or moving equipment, material handling
- Fire
- Explosive gases / compressed gases
- Natural phenomena, such as high winds and earthquake
- Steam
- Extreme heat and cold
- Confined spaces
- Oxygen deficiency
- Lasers

As discussed, other than fire from flammable gases, electrical energy, ionizing radiation, and oxygen deficiency, the scope of these hazards is within the norm encountered in industrial facilities and thus, they do not require an in-depth safety analysis.

4.2.1. General Approach to Risk Minimization

Identifying hazards produces a comprehensive list of those present in a process or facility; thereafter, the screening phase removes hazards below a threshold of concern. Hazards that are “screened out” do not need further study because their risks already are well understood and acceptable. This approach involves a creative, multi-person examination of the processes, operations, and experiments related to the C-AD facilities. A hazard is a source of danger with the potential to cause illness, injury, or death to personnel, damage to an operation, or environmental damage.

For each screened hazard retained for further detailed safety analysis, the C-AD first evaluates the unmitigated risk in terms of its likelihood and consequence using professional engineering judgment based on the design of the machine and the experiment and operating history. This process places the hazard on the risk matrix (see Table 4.2.1). The following assumptions govern the determinations of unmitigated risk:

- The unmitigated risk does not include safety or control systems
- Assigned frequencies are based on engineering judgment
- Assigned consequence can be qualitative, but must be conservative

- If the unmitigated risk is extremely low, then the analysis can stop; otherwise, one proceeds to evaluate mitigated risk

Table 4.2.1 Risk Matrix

Consequence Level ↑

High (Note 1)	Low Risk – Acceptable	Medium Risk- Unacceptable	High Risk- Unacceptable	High Risk- Unacceptable
Medium	Extremely Low Risk - Desirable	Low Risk – Acceptable	Medium Risk- Unacceptable	High Risk- Unacceptable
Low	Extremely Low Risk - Desirable	Extremely Low Risk - Desirable	Low Risk – Acceptable	Medium Risk- Unacceptable
Extremely Low	Extremely Low Risk - Desirable	Extremely Low Risk - Desirable	Extremely Low - Desirable	Low Risk – Acceptable
	Extremely Unlikely ($<10^{-4}$/y)	Unlikely (Between 10^{-4}/y and 10^{-2}/y)	Anticipated (Note 2) Medium (Between 10^{-2}/y and 10^{-1}y)	Anticipated (Note 2) High ($>10^{-1}$y)

Likelihood of Occurrence →

Note 1: Definition of Consequence Levels -

- Extremely Low: Extremely low risk events will not entail a significant injury or occupational illness nor significantly affect the environment.
- Low: Low risk events are those that may cause minor injury or minor occupational illness or have a small impact on the environment.
- Medium: Medium-risk events are events that may have considerable impact onsite or a minor impact offsite. These events may cause deaths, severe injuries, or severe occupational illness to personnel, major damage to a facility, or minor effect on the environment. Medium risk events are those from which a return to operation is possible.
- High: High-risk events may cause serious impact onsite or offsite, including deaths or loss of facility/operation. High-risk events may have significant impact on the environment.

Note 2: 10 CFR 835 may require medium risk events to be unacceptable.

The C-AD re-evaluates unmitigated risk considering the preventive and mitigating factors in place that would reduce either their consequence or frequency. This should move their location on the risk matrix based on assumed conditional probabilities of failure for the mitigating systems. At this point, the mitigated risk should be either low or extremely low. For low risk, the C-AD further determines if there are additional preventive- or mitigating-features that C-AD could credit to bring the risk to extremely low. The last step is to determine if it is necessary to designate any Credited Controls, commit to formal administrative controls, or to specify limits for operation. The C-AD designates a Credited Control when it is essential to protect workers and/or staff from significant hazards.

The purpose of Credited Controls is to highlight structures, systems, or components needed to ensure safety. C-AD incorporates Credited Controls into the Accelerator Safety Envelope (ASE), appropriate procedures, and/or quality-assurance documents.

The risk matrix in Table 4.2.1 supports binning the hazardous event by its risk, i.e., a combination of the consequence of the hazardous event and its likelihood of occurrence. The C-AD deemed some of these combinations acceptable, meaning that the qualitative hazard-evaluation adequately addressed the lower risk bins. The C-AD considered higher risk bins unacceptable, and the incidents therein require additional quantitative analysis to determine the true mitigated risk.

4.2.2. Risk Minimization Approach for Radiation Hazards

There is an insignificant risk of a serious radiation injury at BNL's accelerators, experiments and support facilities. However, for radiation exposure, it is customary to go beyond the scope of safety analysis to demonstrate that transient events, such as credible beam faults, or accidental radioactive material release do not exceed the goals or requirements of annual radiation-dose. The special status of radiation hazards is exemplified in the As Low As Reasonably Achievable (ALARA) requirement in BNL's Radiological Control Manual that exposure to radiation must be minimized and driven as far as practicable below the regulatory limits. The C-AD established some areas as controlled access areas (Controlled Area, Radiation Area, and High Radiation Area) to regulate the flow and behavior of workers therein such that workers receive the minimum radiation exposure, viz., the risk, coincident with operating and maintaining the facility to achieve its authorized research mission, which is the benefit. The C-AD expects that radiation levels in these established areas will not exceed certain specified maxima, depending on the type of zone; the designated area maxima is based on the residual radiation field, and the integrated effect of routine beam losses. The C-AD does not post radiological signs for accident conditions, rather, the C-AD posts for routine operational radiation levels. The C-A Operations Procedure Manual, complying with BNL's Radiation Control Manual, lists the different radiological areas including the required controls for minimizing exposure to external radiation. Significant contamination and internal uptake of radionuclides at the C-AD facilities is extremely unlikely, with the possible exception of the BLIP/RRPL facilities, accordingly, workers there are required to undergo annual whole body counts to check the adequacy of contamination controls. Further analyses of internal-exposure issues are unnecessary. The C-AD documented internal exposure issues in its Technical Basis for Bioassay.[1]

4.3. Hazard Identification and Qualitative Safety Analysis

The C-AD summarized in Appendix 1 the results of hazard identification and qualitative safety analyses.

The hazard identification process examined the C-AD facility's processes, operations, and maintenance that could be a source of danger with the potential to cause illness, injury or death, damage to operations or environmental damage. Conducting these analyses involved using facilities-design documentation, BNL's conventional- and radiological-safety requirements,

[1] Technical Basis for Bioassay Requirements, Collider-Accelerator Department, January 2001, Revised May 2008

facility walk-downs, C-A's Operating and Emergency Procedures, and discussions with engineering staff, experimenters, and safety professionals.

The C-AD completed additional qualitative risk-assessments on specific jobs and in specific work areas using a standard method for developing, using, and maintaining risk assessments meeting the requirements of OHSAS 18001. To finalize these assessments, the C-AD binned its work into 50 types of jobs, observed hazards during the jobs, and estimated risks for each job based on previous injuries. The C-AD updates Facility Risk Assessments (FRAs) and Job Risk Assessments (JRAs) every three years, doing one-third each year. Additionally, the C-AD updates risk assessments after any modifications to areas or jobs. As necessary, the C-AD updates an FRA or JRA in response to an injury, reportable occurrence, near miss, or a non-conformance associated with a job.

4.4. Conventional- and Environmental-Hazards

A review of all safety- and health-issues related to C-AD facilities recognizes the need for further safety analyses of 1) fire and explosions from flammable gasses in the RHIC's particle detectors, 2) radiation from beam and target radioactivity, 3) oxygen-deficiency hazards from large quantities of inert gases, and 4) electrical hazards associated with programmatic equipment. The safety analyses accounted for the preventive and mitigating facility design features. Appendix 1 details the initial hazard screening for further safety analyses.

Standard industrial activities encompass pressure and vacuum vessels, use of toxic-, hazardous-, and biological-materials, use of small quantities of flammable/inert/cryogenic gases/fluids, noise, hoisting/rigging, confined space entries, lasers, rotating equipment, heat, and magnetic fields. The C-AD controls these risks by complying with the consensus standards and codes, SBMS's Subject Areas, and the C-AD Operations Procedure Manual (OPM). When required, these hazards undergo review by the appropriate BNL- or C-AD-committee, or by the C-AD's ESSHQ Division specialists during work planning.

The DOE requires special focus on the hazards of beryllium, lead, and asbestos, even though they are standard industrial hazards. Inhaling beryllium dust or particles can cause chronic beryllium disease (CBD), and beryllium sensitization. The DOE established regulations to require a prevention program for chronic-beryllium-disease, the goal of which is to reduce the number of workers exposed to beryllium, minimize the levels of exposure to it, and establish medical surveillance requirements to ensure the early detection and treatment of disease. Certain work at the C-AD facilities involves beryllium; accordingly, PPE, spill, release, and cleanup plans for beryllium use and handling activities are mandatory.

Lead is a toxic substance that, handled improperly, can create adverse health effects. The inhalation or ingestion of lead dust or particles can cause permanent health effects in children and adults. The OSHA, HUD, and EPA established regulations to require a lead-exposure prevention program, the goal of which is to lower worker's level of exposure to lead, establish medical surveillance requirements to ensure the early detection and treatment of disease, and minimize releases to the environment. The C-AD has procedures detailing measures such as PPE and personal monitoring to comply with these regulations and to prevent injuries and illnesses from working with lead.

Asbestos may be present in many of BNL's buildings, primarily in pipe insulation, ceiling tiles, gaskets, thermal insulation, cement boards and pipes, flooring material, and roofing products. It also may exist in brake and clutch linings, and in some laboratory equipment, such as

insulation on gloves, ring stand clamps, and heating mantles, fire blankets, and older electrical-wiring insulation.

Government agencies, such as the Occupational Safety and Health Administration (OSHA) and the Environmental Protection Agency (EPA) closely regulate the sampling for, and removal of asbestos. Conducting any operation that disturbs or removes asbestos requires written exposure control procedures approved by BNL's asbestos subject-matter expert.

Only qualified C-AD and BNL staff engineers, operators, technicians and maintenance personnel perform electrical work. BNL's SBMS and C-AD procedures fully describe the electrical-safety requirements that assure electrical safety. These requirements mainly are based on NFPA 70E, Electrical Safety in the Workplace. The C-AD allows access by trained individuals only to the injectors, accelerators, transport lines, target areas, and the collider when it powers the magnets; there are no exposed conductors.

The static- or fringe-magnetic fields present in the magnets do not warrant special controls other than appropriate warning signs and training of personnel who have access to the areas in accord with the requirements of the BNL's SBMS, based on the ACGIH's TLV.

The C-AD maintains lists of chemicals used in its facilities, including the manufacturer's Material Safety Data Sheets (MSDS), in accord with BNL's Chemical Management System (CMS). Required reviews of aspects of the conventional safety of the C-AD facilities show that using these chemicals does not warrant special controls other than appropriate signs, procedures, use of personal protective equipment, and hazard-communication training.

The dominant hazardous liquid effluents are ^{3}H and ^{22}Na produced in the earth shielding that might contaminate the ground water or in cooling water released to the ground or the sanitary system. The dominant hazardous airborne effluents are short-lived radioactive gases ^{13}N, ^{15}O and $^{11}CO_2$ in the air removed from the accelerator's enclosures or emanating from target cooling water. To control the hazards of liquid effluents, when required, or at the discretion of management as a best management practice, the C-AD follows Suffolk County Article 12 Code in designing cooling-water systems and piping that contain tritium, sodium, and other radionuclides. Radioactive liquid effluents from the sanitary waste system diverts to a hold-up system at BNL, or to a hold up tank for such liquids in the C-AD facilities, to allow their sampling before disposal. The radioactive air emissions from C-AD facilities are low, except for short-lived radio-gases from the BLIP stack. The annual BNL Site Environmental Report and the annual NESHAPS Report detail the findings from environmental monitoring and on exposure pathways.

The C-AD releases small volumes of non-radioactive inert and hazardous gasses from the experimental detectors each running period. BNL's Environmental Protection Division reviews them to determine if permitting is required. These releases have no safety impact but involve regulatory-compliance issues.

4.5. Radiation Hazards

For over half a century, BNL's accelerators and experimental beam lines have provided protons and polarized protons for the high-energy physics program. For the past 20 years, the accelerators have delivered heavy ions to the nuclear physics- and NASA-programs. The C-AD provides protons to the Brookhaven Linac Isotope producer (BLIP) to produce radioactive atoms for medical uses and to test users' materials for radiation damage. The AGS operates with three beam modes. The high-flux unpolarized proton beam potentially could create the highest

instantaneous (or hourly) radiation fields outside the accelerator enclosures. Polarized proton- and heavy ion-beams generate less instantaneous radiation but typically dominate beam operations for the physics program. The C-AD bases their beam-fault calculations for the AGS's shielding and activation on fluxes associated with high-intensity unpolarized protons, using a proton intensity of $1x10^{14}$ protons/s at 30 GeV in the analysis, an intensity significantly above the facility's sustained capability but affording a conservative value for designing the shielding. The C-AD used similar conservative intensities for other portions of their accelerators and accelerator facilities. They assessed the radiation resulting from heavy ion collisions with matter by assuming that each nucleon in a heavy-ion nucleus is an independent high-energy particle. Recent shielding codes include improving the analysis by considering ion-induced radiation. However, for bulk shielding, the requirements to protection against high-intensity high-energy protons exceeds any shielding requirements for high-energy heavy ions or unpolarized protons.

The C-AD has an extensive research program with electron guns, superconducting RF cavities, and the Energy Recovery Linac (ERL). The ERL research and development facility provides experience with electron guns and accelerating cavities for future use at the Relativistic Heavy Ion Collider (RHIC) and other accelerator facilities. Its enclosure experiences radiation hazards both from x-rays emitted from the RF gun and the five-cell cavity, and Bremsstrahlung radiation and neutrons from losses of the 25 MeV electron-beams.

The C-AD constructed two blockhouses in Building 912 for developing and testing superconducting RF guns (SRF blockhouse) and cavities (VTF blockhouse), and considers the radiation sources for the two blockhouses as Radiation Generating Devices (RGDs).

The species and energy of the particle beams used at the C-AD facilities vary considerably. The hazard from exposure to the primary beam is present only when the machines are operating. The accelerated primary beam essentially is a mono-energetic current of one particle species whose passage through the accelerator equipment, experimental equipment, targets, or thin shielding generates secondary particles, with a wide range of energies, which in-turn create residual radioactivity when slowing down in shielding. As the primary beam's energy increases, the number and diversity of secondary particles existing in the radiation fields expands, and the potential to create residual activity in the accelerator components increases when the number of inelastic spallation reactions become significant[2]. Primary beam losses occur during machine instabilities, interaction with stripping foils, intrusive beam instrumentation, collimation, mistuned beam, and finally, when the beam strikes a beam dump. Typically, the hazards of neutrons dominate the design of the shielding for the hadron machines; above 10 GeV, muons can dominate the shielding requirement in the forward direction. For electron machines, Bremsstrahlung radiation is the most important consideration in the shielding design in the forward direction. All these potential sources of radiation cease as soon as C-AD removes the electrical energy from the source; thereafter, only residual activity inside the accelerator enclosure will pose an exposure risk.

The neutron dose to C-AD staff is less than 10% of their total annual dose. Accordingly, the recently revised neutron-radiation modifying factors required by 10 CFR 835 have only a small effect on the computed doses during routine beam-loss. Except for high-intensity unpolarized proton operations and maximal credible beam faults, the neutron dose is insignificant for routine operations. Experimenters and operating personnel who are near the shielding during high-intensity proton machine operations receive the higher neutron doses.

[2] Typically when hadronic particles exceed a few GeV of kinetic energy.

The primary ion beams, secondary pions, neutrons, and scattered particles induce radioactivity in the machine's components, targets, collimators, beam scrappers and dumps, shielding including soil, cooling water, and nearby equipment. The hadronic beam's interactions with these components produce a cascade of hadronic particles that cause spallation reactions in the materials, followed by the evaporation of nucleons, mostly neutrons, from the excited residual nuclei. Spallation generates the full spectrum of radionuclides with mass equal to the original target material's nuclei down to tritium. The radionuclides produced this way are proton rich; that is they are above the element stability line and quickly decay to stable elements; most radionuclides live only for minutes to days and the longest-lived nuclides are in general 5.3-year Co-60 and 12.3-year tritium. Only a small number of radionuclides are important to safety because of their production cross-section values and radioactive half-life values. Because high-energy particles penetrate deep into iron and concrete, the result is volumetric activation within solid materials. While this results in significant self-shielding, entry into activated areas still requires radiation surveys and radiation controls following the machine's shutdown for inspection, maintenance, or repair. The C-AD minimizes the residual radioactivity produced in cooling water by passing it through filters and deionizers, so reducing the content of most activation products but for tritium. With the exception of targets, collimators, beam dumps, and scrappers, machine injection and extraction components, specific activity is not high in concrete shielding or magnet iron. Due to the significantly long mean-free-path between interactions, the extent of the activation is widespread, dilute, and moderately lived and dispersed, unlike activated materials at reactor facilities. Therefore, the potential for significant contamination issues is low at C-AD's accelerators.

Several parameters of the accelerator beam determine the bulk characteristics of the facility's shielding. First, the type of accelerated particle species determines whether hadronic cascades (proton- and ion-accelerators) or electromagnetic cascades (electron accelerators) dictate the shielding. Second, the maximum particle-energy establishes the relative characteristics of the transverse-to-longitudinal shielding. For either hadron[3] or electron[4] accelerators, the forward shielding requirements predominate at high energies; therefore, it is important to establish the accelerator's maximum energy. Finally, the beam intensity or power influences the shielding design. At sufficiently high energy, particle decays generate muons, which can dominate the shielding requirements in the forward direction.

Muons arise from the decay of pions and kaons produced by the interaction of high-energy hadrons. Muons are leptons, and lose energy by ionizing atoms in the materials they traverse. For example, a 30 GeV muon has a range of 80 m in soil, 60 m in concrete, and 20 m in iron. The muon's energy spectrum varies up to the energy of the parent pions or kaons, and thus, they can dominate completely the forward shielding requirements. Muons are similar to electrons in every respect, except for their larger mass.

High-voltage devices, typical of accelerators and distributed throughout the accelerator's enclosure, introduce a possible risk of exposure to x-rays. They include RF cavities, klystrons, and buncher- or de-buncher-cavities. The C-AD protects personnel from the x-rays though a combination of shielding, interlocks, and procedures, depending on the potential x-ray levels.

---

[3] A. H. Sullivan, A Guide to Radiation and Radioactivity Levels Near High Energy Particle Accelerators, Nuclear Technology Publishing, 1992 (see Figure 2.2)

[4] NCRP Report No. 144, Radiation Protection for Particle Accelerator Facilities, National Council on Radiation Protection and Measurements, 2003 (see Fig.3.5)

The principal radiation hazards at C-AD facilities derive from the primary beam's flux and the machine's duty cycle. Listed in order of importance, these hazards include the following ones:

- Inadvertent exposure of workers to the primary beam
- Exposure to prompt secondary radiation created by primary beam losses during normal operation or episodes of abnormal losses, including areas near labyrinths and penetrations
- Exposure to residual radiation induced in the machine's components such as beam scrappers, beam dumps, collimators, extraction magnets, targets, and stripping foils
- Inadvertent release of activated cooling water to the environment
- Unintended release of radioactive contamination to groundwater by allowing rainwater to leach through uncapped activated soil-shields
- Exposure to activated air from primary- and secondary-beam
- Exposure to radioactive plumes from downward stack emissions
- Skyshine radiation, viz., low-energy neutrons that radiate back to earth after high-energy hadron interactions in the air above the accelerator

4.5.1. Source Terms and Calculated Radiation Fields

The C-AD designed the ionizing radiation shielding for routine- and maximum-operating beam conditions for the each accelerator and accelerator facility. In locations where C-AD transports all types of beams, unpolarized protons dominate the shield design for instantaneous and hourly dose-rates. The radiation-protection program uses defense-in-depth to lower the risk of exposure, including posting, access controls, radiation monitors, and procedures, along with the traditional defenses, such as time, distance and shielding. The shielding, together with the other controls, meets the requirements for hourly dose, yearly dose, and dose during an accidental beam-loss. The C-AD designed shielding to mitigate the greatest radiation hazards during operations, i.e., neutron- and muon-radiation from high-energy hadron accelerators, electron- and Bremsstrahlung-radiation from lepton accelerators, and x-rays from high-voltage devices, such as RF cavities.

Appendix 1 gives the baseline evaluation of radiation hazards associated with operating and constructing the accelerator and experimental facilities. Specifically, C-AD evaluated the hazards of the following sources of radiation:

- Exposure to an ion- or electron-primary beam including synchrotron radiation for electron machines
- Prompt radiation immediately outside the shielding of the primary ion- or electron-beam
- Exposure to x-rays from high voltages devices (e.g., RF cavities, klystrons)
- Exposure to residual activity
- Activated cooling water
- Potential contamination of groundwater from activated soil
- Air activation
- Skyshine

Typically, the C-AD computed the dose rates in a manner that overestimates the potential dose. Similarly, the radiation-source terms and the duration of beam operations were overvalued. The C-AD retained records of archival calculations in the archival SADs, in C-AD technical notes, in memoranda to the Radiation Safety Committee (RSC), and in the RSC Committee's

minutes. The dose estimates determine the requirements for shielding, soil capping, radiological posting, access controls, potential for activated water, and air-emission monitoring during the design phase of a project, or following a facility modification. The C-AD conducted beam fault studies after a construction or modification to ensure adequate designs; and maintains the records of the fault studies. Finally, Operators and Operations Coordinators monitor the following to assure that the accelerator and accelerator facilities operate within their approved safety basis:

- Check-off lists for each area are completed to verify the area has the correct shielding, and/or enclosure configuration before starting beam operations after a shutdown
- Periodic dose-rate surveys are conducted and documented by qualified Radiological Control Technicians (RCTs) of the BNL Radiological Control Division (RCD) during beam operations
- Groundwater samples are obtained at intervals defined by BNL's SBMS, and periodic soil and removable soil samples are taken at known locations of beam loss within the accelerator enclosures to assure that groundwater contamination is well below the limits
- Periodic confirmatory air samples are obtained to verify that anticipated activated air emissions remain well below trigger level of 10 mrem per year to the maximally exposed individual (MEI) at BNL's site boundary
- Continuous measurements are made of activated exhaust air for any exhausted enclosure that is anticipated to exceed the trigger level of 0.1 mrem per year to the maximally exposed individual (MEI) at the site boundary

The C-AD completed safety analyses of the potential radiation-hazards from operating the following C-AD accelerator and accelerator facilities:

- Brookhaven Linac Isotope Producer (BLIP)
- Linac
- Linac to AGS Line
- Electron Beam Ion Source (EBIS)
- Tandem Van De Graaffs (TVDG)
- Tandem to Booster Line (TtB)
- Booster
- Alternating Gradient Synchrotron (AGS)
- U-Line
- V-Line
- W-Line
- R-Line
- AGS to RHIC (AtR) Transfer Line
- Collider (RHIC)
- Collider Intersecting Regions
- NASA Space Radiation Laboratory (NSRL)
- Energy Recovery Linac (ERL)
- Accelerator R&D Blockhouses
- Brookhaven Linac Isotope Producer (BLIP)
- Radionuclide Research and Production Laboratory (RRPL)

4.5.2. Preventing Exposure to Primary Beam and x-rays from HV Devices

The RSC reviews the risk of radiation exposure in all C-AD areas. The potential exposure levels in primary-beam areas are extremely high; the RSC uses approved procedures to assess the required protection for each one. Locked and/or interlocked gates prevent access to a beam enclosure and remove the radiation source. The C-AD predominantly transports primary beam through an evacuated beam pipe that reduces the potential dose to an individual in a primary area with beam.[5] The spray of prompt secondary particles produced by the scrapping or loss of the primary beam into the beam pipe or other accelerator components, which depends upon the beam's energy, still may present an exposure potential to an individual. An automatic access controls system (ACS) prevents exposure of personnel to enclosures where the potential dose is greater than 50-rem in one hour.[6] The C-AD also uses automatic access-control systems to protect against lower-level radiation fields; however, the DOE, BNL and C-AD allow locks or other access controls for lower-level hazards if automatic systems are impracticable or unavailable. Table 4.5.2.a illustrates examples of the potential exposures inside enclosures due to the primary beam striking a thick object.

Table 4.5.2.a Transverse Dose Rate for Full Primary Beam Loss

Area	Beam Intensity	Beam Energy	Dose per Fault or Dose Rate at One Foot, rem/h unless otherwise indicated
Linac[7]	1.56×10^{15} p/s	0.200 GeV	9.4×10^{5}
Booster	10^{14} p/s	3.0 GeV	9.0×10^{5}
AGS	10^{14} p/s	30. GeV	8.6×10^{6}
RHIC[8]	5×10^{13} p/store	300 GeV	1.0×10^{5} rem per fault
ERL[9]	1.5 MW e	3.5 MeV	8.6×10^{7}
EBIS	200 nanoA	4 MeV d	6.0×10^{-1}
AtR[10]	4.4×10^{11} p/s	30 GeV p	3.8×10^{4}
U Line (upstream)	10^{14} p/s	30 GeV p	8.6×10^{6}
U Line (downstream)	1.1×10^{11} p/s	30 GeV p	9.5×10^{3}
NSRL	1.95×10^{14} p/h	3.0 GeV	8.7×10^{3}
TtB[11]	200 nanoA	18 MeV d	<50
Tandem[12]	4 microA	30 MeV d	1.7×10^{3}

[5] The C-AD uses evacuated beam pipes to maintain the quality of the transported beam and, as a secondary purpose, to reduce beam-air interactions.

[6] ACS refers to the relay or "hard-wired" access-control systems, while PASS denotes programmable systems (PLC or FPGA). However, national standards use the term ACS for both.

[7] D. Beavis, "Ring Me: Potential Radiation Levels from Beam Faults in the AGS Ring", AGS/EP&S Tech Note No. 138, Sept. 30, 1991. The estimates for the Booster and AGS are also given in the note.

[8] A.J. Stevens, "Radiation Field in the Vicinity of the Collider Center", AD/RHIC/RD-77, Oct. 1994

[9] Prototype Energy Recovery Linac, Building 912, Safety Assessment Document, June 30, 2008

[10] Based on 5×10^{13} per ring in 114 bunches inject protons injected every 4 seconds via one bunch.

[11] See RSC Minutes of Oct. 17, 2007

[12] Based on NCRP Report 51 and a carbon target. A Ta target would be a factor of 50 lower.

During routine operations, the normal radiation losses are two- to four-orders of magnitude below the levels in Table 4.5.2.a. C-AD computed the doses using maximum beam intensity, maximum beam energy, striking a thick target, and took no credit for the self-shielding provided by the struck object. With the exception of EBIS that has no enclosure other than a beam pipe, these fault doses illustrate the importance of ensuring that no personnel are inside the machine enclosures while the beam is operational.

The magnitude of potential doses inside the accelerator enclosures requires that the C-AD employ extremely reliable access-controls to prevent ingress when the beam is present. The C-AD's RSC requires that two interlocked devices prevent the radiation when the C-AD makes the enclosure accessible.[13] The ACS uses two "critical" devices to disable the beam. In some circumstances, the C-AD uses similar devices. When practicable, the RSC requires automatic monitoring of the status of the critical devices; if they do not complete their required safety function in an allotted time, then the access-control system will "reach back" to an upstream device to terminate the radiation. The reach-back device typically is a critical device for an upstream area. The RSC evaluates the reliability of critical devices and makes recommendations on changes when appropriate to accommodate the changing requirements of the programs. Table 4.5.2.b lists the C-AD accelerator enclosures with dual critical-devices.

[13] This requirement is when the radiation dose rate exceeds 50 rem in an hour. C-AD refers to these devices as critical devices.

Table 4.5.2.b Dual Critical Devices for C-AD Enclosures

Area Protected by Critical Devices	Critical Device
Linac Enclosure	LEBT Beam Stop (BS) 1 (35 keV)
	LEBT BS 2 (750 keV)
	Tank 1 RF as alternate for BS 2
Booster Enclosure	Linac to Booster BS 1 and BS 2
	DH2/3 bending magnet off as an alternate to BS 1
	TTB BS 1 and BS 2
	EBIS BS 1 and BS 2
	Beam shutter
NSRL Enclosure	D6 septum magnet off contactor 1
	D6 septum magnet off contactor 2
	Beam plug in
NSRL Target Room (only)	20 degree bending magnets off
	Beam plug in
AGS Enclosure	F6 extraction magnet off
	DH2/3 bending magnet off
	Beam shutter
U Line (upstream AtR)	U-line dipole magnets D1/2 off by contactor 1 U-line dipole magnets UD1/2 off by contactor 2
	H10 extraction system off
W Line (downstream AtR)	8 degree bending magnets off
	20 degree bending magnets off
RHIC Tunnel	Switching magnet off
	X,Y arc magnets off
	20 degree bend as an alternate to X,Y arc magnets
	Beam shutter 1 and 2
TTB Tunnel	BS 11BP10
	BS 11BP40
Tandem Vault	Dual low-energy BSs MP6
	Dual low-energy BSs MP7
ERL Enclosure	Klystron contactor KCD1
	Klystron contactor KCD2
	480V contactor 50KWCD1
	480V contactor 50KWCD2

Dual sensors monitor the locked entrance gates to the enclosures. The C-AD assures the interlock function with redundant systems of electromechanical relays, or with redundant PLC based systems. The ACS controls the allowed states of the critical devices; the probability of their unsafe failure allowing a radiation overexposure from primary ion- or electron-beam or to RF-produced x-rays is extremely low such that this hazard is not credible; hence, further analysis

was not undertaken.[14] In addition to preventing beam injection, the RHIC collider must have dual shutters to remove any residual stored beam should the ACS sense a gate opening, and the RHIC abort system, which is not a Credited Control, fails to remove the beam. The AGS and Booster rings are not storage rings, but the flexibility of the RF systems led the RSC to require one beam shutter in each ring as a precaution against small amounts of the residual circulating beam remaining during the breach of a gate.

The C-AD facilities have various high-voltage devices that potentially can generate copious amounts of x-rays. Table 4.5.2.c lists examples of these devices, and their x-ray dose rate.

Table 4.5.2.c Absorbed Dose Rate near x-ray Sources

Area	Device	Maximum Dose Rate in rad/h at one foot
Linac[15]	RF Cavities	1-5
Linac[16]	Laser Profile Monitor	1-4
RHIC[17]	RF cavities	200
ERL[18]	Five-cell cavity	$2x10^4$
ERL	Superconducting RF Gun	Not Calculated
VTF[19]	Test cavities	$3.7x10^5$
SRF[20]	Electron gun	300

Other C-AD areas have high-voltage induced x-ray hazards, such as the EBIS's ion-beam debunchers, and the IH Linac; the Booster and AGS beam accelerating cavities; and other short-term high-voltage device experiments usually performed in Building 912.[21] The C-AD's RSC reviews x-ray shielding and/or access control requirements for these devices.

4.5.3. Beam Faults and Chipmunks

The maximum credible unplanned loss is complete loss of the beam at any single point at the maximum energy for a short period. This is termed a "fault" condition throughout this report. In appropriate areas, radiation monitors, so-called "Chipmunks" by the C-AD, can detect fault levels essentially instantaneously, and if interlocked, the beam will shut down within a maximum of 9 seconds.[22] This delay time applies when a Chipmunk radiation monitor experiences a dose

[14] D. Beavis, Failures in the PLC Based Radiation Safety Systems, October 31, 2000; D. Beavis, Frequency of Interlock Testing, November 6, 2000; D. Beavis, Estimation of Time to Loss of Protection-The D-Downstream Gate, November 13, 2000

[15] C-AD based the dose rates on archival radiation surveys performed by the BNL's RadCon Division

[16] See ASSRC Minutes of Oct. 27, 2009

[17] S. Musolino, Measurements of Prompt Radiation from the PoP RF Cavity Test Stand in Building 1005 Highbay, August 8, 1995, and Measurements of Prompt Radiation from the Storage RF Cavity Test 4 o'clock Service Building, August 8, 1995

[18] Prototype Energy Recovery Linac, Building 912, Safety Assessment Document, June 30, 2008

[19] D. Beavis Memorandum to RSC, "Initial Radiation Calculations for the VTF Blockhouse", April 6, 2009

[20] RSC Minutes of March 17, 2009, "The SRF gun Blockhouse"

[21] D. Beavis and R. Karol, "E-Field Tests for EDM in the A3 Cave Area", March 19, 2010

[22] G. Bennett to D. Beavis, RSC Chair, "Chipmunk Response Time," BNL Memorandum, October 9, 1991

rate near the actual trip point. As the dose rate increases beyond this point, the delay time decreases.[23] Thus, the assumed 9-second delay time yields a conservatively high estimate for the fault doses. For areas where each fault may produce more than 20 mrem, the C-AD employs system of access controls, such as barriers and locked fences, and upgrades the area to one of several types of radiological areas for the purpose of radiation protection.

4.6. 200-MeV Linac Shielding Analysis

The 200-MeV Linac accelerates 750 keV proton beams from one of two sources and delivers the beam to three possible locations. Operators may change the source and delivery location on a pulse-by-pulse basis. The unpolarized H^- source produces the largest proton current with achieved intensities of 7.2×10^{14} protons per second. The polarized proton source can produce 5×10^{12} protons per second. Operators deliver high-intensity beam to BLIP for radionuclide production. The high intensity beam also can be delivered to the Booster via the Linac-to-Booster (LtB) transfer line, although there have been no high-intensity Booster operations for more than five years. Operators deliver low-intensity beams to the Booster from either the unpolarized H^- source, or the polarized proton source. For Linac studies and for polarization measurements these beams go to the beam stops in Linac's High Energy Beam Transport (HEBT) line.

The sources produce 35 keV protons, whose energy is too low to create the potential for exposure to either x-rays or neutrons at the primary beam stops or in the vacuum pipe's walls if beam is misaligned.

Operators accelerate the 35 keV protons in an RFQ to a kinetic energy of 750 keV that is too low to create x-rays or neutrons. There are 750 KeV beam stops on either side of the RFQ with water-cooling systems to absorb the source's entire current.

Physicists analyzed the Linac's radiation shielding for 1.56×10^{15} protons per second at 200 MeV to accommodate for future improvements of the sources. The ASE Safety Limit for protons is 1.1×10^{18} GeV-nucleons/h, or 1.56×10^{15} protons/s at 200-MeV. The present configuration of the ion source limits the actual Linac output to 40 to 41 mA per pulse with a ~500 µsec pulse width, and a ~6.7 Hz beam repetition rate, which is 7.2×10^{14} protons/s at 200-MeV.

The Linac has nine tanks that operators can use incrementally to increase the beam's energy. Linacs have a fixed structure for accelerating the beam and each tank can increase the beam's energy only if the previous tanks have accelerated it. The exit energy from tank 9 can be any one of the nine fixed tank energies.[24] The first tank accelerates the beam to 10.4 MeV, and the final tank to 200 MeV. The BLIP facility often shuts off several tanks to operate at energies lower than 200 MeV. Operators tune the beam so to minimize losses at low energies. The C-AD enclosed the Linac accelerator with interlocked areas, starting near the beginning of tank 1. The Linac ACS protects against any potential exposure to accelerated beam by dual interlocks and critical devices.

There is an x-ray hazard along the length of the copper Linac RF tanks, the size of which depends on the conditioning status of the RF structures inside the tanks. Sparking may occur due to field-emission electrons along the entire length of the cavity; they are cavity-surface electrons

---

[23] J. Geller to D. Beavis, RSC Chair, "Time to Chipmunk Interlock for Large Radiation Faults," March 2, 1999

[24] The nine energies, in MeV, are 10.4, 37.5 66.2, 92.6, 116.5, 139.0, 160.5, 181.0, and 200.3.

pulled into, and accelerated to several MeV by the cavity's strong RF field. When the accelerated electrons stop by hitting the walls of the cavity, they convert some of their kinetic energy into photons in the x-ray portion of the electromagnetic spectrum, i.e., x-rays that penetrate the cavity's walls. Near the tanks, C-AD measured exposure rates of 1 to 5 R/h during normal operations. A gate after tank 9 and the gate at tank 1 define the area of the RF / x-ray hazard. A single layer of interlocks prevents personnel from entering the RF area when the RF is operating. Linac operators sometimes need to be in the RF area with the RF operating to diagnose a problem. The C-AD controls these accesses under a procedure with trained personnel wearing alarming dosimeters.

Experimenters installed a Laser Profile Monitor (LPM) after tank 9 outside the RF area. This device potentially can generate x-rays; hence, the C-AD installed a single layer of interlocks to prevent access with the unit energized. If operators do not secure the area, the ACS holds the LPM high-voltage power supply off.

The earth fill over the Linac's 200-MeV proton transfer line to the Booster, the LtB, is 5.4 m, with a transverse rise over run of 1 to 3 for the berm. Thus, the shield thickness at ground level is 16.2 m. The Linac enclosure itself provides an additional 0.61 m of concrete thickness overhead and on the sides at the 200-MeV end. At the low-energy end, 10 MeV, the thickness of the overlying earth is 3 m, and the concrete wall and roof of the Linac enclosure is 0.52 m. The thicknesses of the earth shield and concrete enclosure increase as proton energy rises along the length of the Linac. At the end of the Linac tunnel, the 200-MeV proton beam splits and can provide a maximum allowable flux of $1x10^{14}$ protons/s to the Booster or the AGS with the remaining flux being transported to the BLIP.

The losses from the Linac beam are small, in fact sufficiently low that they are difficult to measure. The one exception is the beam lost in tank 1 wherein about 28% of the beam is lost, with most loss occurring at or just above 750 keV. The energy of this beam loss is too low to create activation products in the Linac's components or to challenge the shielding. The greatest high-energy losses localize at the first pulsed dipole that deflects the beam to the BLIP. For the radiation-protection analysis, the C-AD assumes a routine loss of 1%; for fault conditions, C-AD assumes complete loss of the beam. In most locations, a complete loss of the beam would damage the vacuum pipe and vacuum windows due to the high energy-deposition. Hence, a Fast Beam Interrupt (FBI) system quickly terminates large beam losses. The FBI monitors the status of radiation monitors, vacuum valves, and beam stops, and terminates the beam if any device's status is above threshold or incorrectly positioned. Although the FBI system is not part of the ACS, it is an important contributor to the Linac's ALARA effort.

The penetrations in the Linac include the tank 1 gate or tunnel entrance, many 40 cm transmission line holes, many 60 cm vacuum lines, many 60 cm cable trays, many 15 cm cable sleeves, and two bricked-up 1.8 m x 2.4 m access ports for equipment. The transmission line, cable trays, cable sleeves and vacuum penetrations do not give direct line-of-sight to the RF tanks, which contain the beam, so reducing the potential fault dose-rates outside the Linac to acceptable levels. The C-AD posts the walkways in Building 930 along the side of the Linac to control personnel access to areas that potentially have radiation faults.

The penetrations in the HEBT include a plug door, many 15-cm cable sleeves, two 60 cm cable trays, one 30 cm cable opening, the LtB-Booster penetration, the TtB–Booster penetration, the AGS-HEBT door and labyrinth, a 60 cm x 120 cm airshaft, and two 7-cm cable penetrations. The cable penetrations and the airshaft do not give direct line-of-sight to the beam line.

Radiation that extends several thousand meters from an accelerator shield or the top of an accelerator building is termed the skyshine, when there is no direct line-of-sight. Predominantly, skyshine is from escaping high-energy neutrons (>20 MeV) or high-energy photons that exit through thin parts of the shield or the roof. These high-energy particles interact with atoms in the air column up to hundreds of meters above the accelerator, producing lower energy neutrons and photons (typically less than 1 MeV) that scatter downward to locations where there is no direct line-of-sight. Ongoing monitoring shows that skyshine is a minor contribution to the annual dose to the public and workers. Annual environmental radiation measurements for offsite areas reveal that it is not measurable above natural background radiation levels. BNL records the measured skyshine levels in the BNL Site Environmental Report produced by the BNL Environmental Protection Division.

Skyshine from the Linac beam is not a significant contributor to external dose due to the relatively low energy of the Linac beam and the shield's thickness. Table 4.6.1 summarizes calculated dose rates and fault study dose rates for the Linac area for 200-MeV protons. C-AD assessed the former from simple geometric shapes and for uniform line losses or single-point losses. The RCD measured the dose rates during intentional beam-loss studies (fault studies) using survey equipment that assumes values for the ratio of neutrons-to-photons in instruments that measure a mixed radiation field; the RCD assumed weighting factors for neutron doses. The C-AD undertakes fault studies with low-intensity beams, and extrapolates the measured results to correspond to full intensity. Additionally, steering a beam to a specific loss location is imprecise if there is no fixed beam-stop at that location. Given these constraints, these methods provide comparable results.

Table 4.6.1 Summary of Radiation Levels for Linac

Shield Type or Loss Point (2 m air assumed in addition to the shielding)	Area of Interest	Routine Equivalent Dose Rate (1% loss rate or 4.7×10^{10} p/s-m) mrem/h	Fault Equivalent Dose[25] per Linac Pulse[26] (7.2×10^{14} p/s; ~6.7 Hz) mrem/pulse (mrem/h)
Calculation:			
0.6 m concrete, 5.4 m earth	Linac Tunnel Top	1.1×10^{-5}	2.3×10^{-7} (0.007)
0.6 m concrete, 3 m earth	HEBT Top	5.4×10^{-2}	9.3×10^{-4} (26)
0.6 m concrete, 6 m earth	HEBT Side	1.4×10^{-6}	2.8×10^{-8} (0.001)
1.2 m concrete, 3.3 m earth	Linac Equipment Bay	1.2×10^{-3}	2.3×10^{-5} (0.7)
Fault Studies[27]			
Outside on Berm:			
Beam at HEBT Stops	HEBT Top	-	1.5×10^{-3} (39)
Beam at HEBT Stops	Blip Pump House Gate	-	3×10^{-3} (79)
Beam at HEBT Stops	In BLIP Pump House	-	5.6×10^{-2} (1400)
Beam at HEBT Stops	AGS / HEBT Gate	-	2.7×10^{-1} (6800)
Inside Enclosures:			
Beam Near TtB Penetration	HTB Enclosure[28]	-	1.4×10^{-2} (340)
Beam Near LtB Penetration	Booster Enclosure	-	2.9×10^{-3} (72)
Beam Near HTB Penetration	Booster Enclosure	-	7.9×10^{-3} (200)

Loss of protons with energies above 50 MeV in the regions of the Linac, LtB, and regions produces neutrons that may reach nearby facilities. The earth shield in the Linac area rises proportionately with proton energy, up to 5.4 m when the protons reach 200 MeV. Following the

[25] In appropriate areas, fault levels are detectable instantaneously by radiation monitors, and, if interlocked, the beam will shut down in less than 9 seconds

[26] These dose rates correspond to the presently achieved operating limit but can be scaled to the limit of the ASE beam by multiplying them by a factor of 2.4

[27] D. Beavis, Summary of Linac Fault Studies, HTB Safety Analysis Report, Appendix 7.7, 1991

[28] This is a small-area source, less than 1000 cm^2

Linac-accelerating-cavities is the LtB line located in the first 15 m of the HEBT. At this point, operators may transport Linac beam into the Booster. Shielding over the HEBT transport line is 3 m earth and 0.6 m concrete.

There are two mechanisms of beam loss in the Linac, LtB, and HEBT: 1) Loss of longitudinal stability; and, 2) failure of the magnet system. These failures may cause total beam losses that operators normally detect and correct after several lost pulses. Transient phenomena may give rise to a continuous low-level loss of beam. While a 0.1% uniformly distributed loss is the ideal condition for the Linac, significantly greater ones, assumed at 1%, are acceptable based on the thickness of the HEBT's shielding, and the proximity of other facilities around the Linac.

The limiting continuous loss in HEBT is about 2%. For this, the C-AD assumes a limit of 25 mrem per year to personnel in the BLIP Facility, which is closest to the HEBT line, and which BLIP operators occupy about 1000 hours per year. In the past, the C-AD used HEBT line directly to inject protons from Linac to the AGS. Because the Linac currently injects into the Booster, the C-AD now uses the HEBT line for test beams of polarized protons a fraction of the time when the Linac operates. Assuming a distributed loss over HEBT line, a 36 m line source, a flux of $1x10^{14}$ protons/s to Booster or AGS, a lateral distance between BLIP and HEBT of 15 m, and loss distributed over 1000 hours of operation, then the line-source equation indicates a maximum allowable loss rate of $5.5x10^{10}$ p/s-m during this time. This value is equivalent to a 2% beam loss continuously during the proton-running period. The C-AD made a similar analysis for continuous loss in the LtB.

The shielding analyses do not account for the activation of cooling water. Within the BLIP Pump House are cooling lines containing water activated by primary-beam losses in the HEBT beam stop. The dose rate from very short-lived dissolved radioactive gases in the water, which engenders a photon flux in the Pump House, adds to the dose equivalent from neutrons arising from primary-beam losses.

The shielding analyses for high-intensity protons encompass all Linac operating conditions. For example, the polarized proton-beam originates as a negatively ionized vertically polarized hydrogen-beam from a polarized ion source. These H^- ions inject into the Linac RFQ. The beam moves through the Low Energy Beam Transport line (LEBT) into the Linac where it accelerates to 200 MeV. The beam accelerates from the RFQ with a maximum intensity of a few TP per second reaching 200 MeV; this is an order-of-magnitude less than high-intensity unpolarized protons.

4.7. Electron Beam Ion Source (EBIS) Shielding Analysis

The EBIS Pre-Injector facility located in the Linac Building 930 has potential radiation hazards for personnel entering the building. There is no likelihood for affecting other BNL personnel, off-site individuals, or the environment. The primary radiation-hazard from the EBIS is low energy x-rays from high voltage structures used to accelerate, shape and modify ion-beam bunches. One type of EBIS ion beam, deuterons, may produce low levels of neutrons.

Radiological-area classifications at the EBIS are in accordance with requirements in the BNL's Radiological Control Manual. The C-AD uses the results of radiation surveys to maintain exposure "As Low As Reasonably Achievable" (ALARA). The C-AD's Radiological Control Technicians (RCTs) routinely survey the 200-MeV Linac building near the EBIS Pre-Injector. Generally, radiation levels are low, and so the RCTs post most areas as Controlled Areas. Because most operations with the EBIS Pre-Injector involve ions with masses greater than

deuterons, RCTs presently have posted “Controlled Area - TLD Required” in the EBIS Pre-Injector Area. They will re-evaluate if the C-AD accelerates deuterons at the EBIS.

Operators accelerate all beams of all ions at EBIS to 2 MeV per u to match the magnetic fields of the Booster injection system. Although there is prompt radiation present in the EBIS Pre-Injector building due to some ion losses, it is less than 5 mrem/h along the EBIS Pre-Injector surfaces, even if the ion beam is lost on the walls of structures. The RCTs found one exception at some penetrations near the EBIS IH Linac where small locations are near 5 mrem/h. While a 2 MeV per nucleon deuteron beam is yet to be accelerated, the C-AD has calculated its beam loss would generate levels of neutron radiation above 5 mrem/h in occupied areas.

Typically, photons and electrons that may emerge from heavy-ion beam faults with ions less than 7.5 MeV per u are unlikely to induce radioactivity in any target except beryllium (1.66 MeV per u), deuterium, or tritium (a few hundred keV per u). The C-AD does not use any of them in the components or walls of the EBIS Pre-Injector; thus, induced radioactivity from the heavy-ion beam is unlikely.

Neutrons from heavy-ion beam faults are possible; however, at the ion currents planned, neutrons will not be a measurable radiological issue. At 2 MeV per u, ions more massive than copper are unlikely to penetrate the coulomb barrier of target atoms to create evaporation- and fusion-neutrons since the repulsive Coulomb force increases dramatically with the product of the Z projectile and Z target. However, some “tunneling” through the coulomb barrier may occur in a collision, resulting in the release of an evaporation neutron but this reaction is infrequent. Low-Z heavy ions involved in a beam fault are better able to generate neutrons in collisions with other atoms. The most significant of these low-Z ions is deuterium that can release neutrons in exothermic fusion reactions with target atoms, in addition to evaporation neutrons.

Table 4.7 shows the dose-rate measurements from an unshielded source of 2 MeV per u deuteron beam after hitting a thick target of different materials. The beam currents used in the measurements are from the TVDG and are 20 times less than the maximum beam current for deuterons from the EBIS Pre-injector. Operators used TVDG Target Room 2 and the 40-degree line for this study, attaching the target material to a stainless-steel Marmon flange as a beam stop. They focused the size of the deuteron beam to 10 mm diameter.

Table 4.7 TVDG Measurements of Dose Rate from Deuteron Losses

Target Material	Aluminum	Stainless Steel	Copper	Tantalum
Deuteron Energy (MeV per u)	2	2	2	2
Current (nA)	10	10	10	10
C-AD Chipmunk Result, mrem/h 0 degrees at 1 ft	62	5	2.2	0.25
C-AD Chipmunk Result, mrem/h 90 degrees at 1 ft	37	3	1.5	0.2

The C-AD adjusted the Chipmunk’s response to a mixed neutron/gamma radiation field for a ratio of neutron absorbed-dose to gamma absorbed-dose of 0.16, and a neutron-radiation weighting-factor (formerly called Quality Factor) of 5.63, which is typical at AGS. The mixed-

field ratio depends on materials through which the radiations pass before reaching an accessible area. At the AGS, thick concrete walls, several meters, influence the neutron-to-gamma absorbed dose ratio in accessible areas. At the EBIS, and in the TVDG study, there are no concrete walls between a location of beam loss and an accessible area. The C-AD based their radiation-weighting factors on neutron energy, and set the response of their Chipmunk instrument for a spectrum of neutron energies for neutrons with energy above 5 MeV.

Based on TLD studies made during the TVDG deuteron measurements, the ratio of neutron absorbed-dose to gamma absorbed-dose was 0.27 for an unshielded aluminum target, not 0.16 as previously determined at AGS. The C-AD assumes a neutron-radiation weighting-factor of 20 at TVDG, which is the maximum assigned for 1- to 2-MeV neutrons. Thus, the measured dose rates in Table 4.7 must be adjusted upward by a factor of six, (0.27x20) / (0.16x5.63), because they were measured with a C-AD Chipmunk instrument set to respond correctly to an AGS- or RHIC-neutron/gamma radiation environment, not a TVDG one.

The IH Linac is the location of concern at the EBIS where the deuterons gain enough energy to penetrate the coulomb barrier of target atoms, causing nuclear reactions that release neutrons. If there were no beam losses, then neutrons would not be a concern; however, beam losses are inevitable, and at these beam currents for deuteron ions, even small losses may produce measurable radiation fields near the EBIS. From the maximum deuteron beam current out of the EBIS, 200 nA, and the measurements made using a 10 nA TVDG deuteron beam, the anticipated maximum equivalent dose rate is 7500 mrem/h. However, the C-AD did not install aluminum or other low-Z materials in the EBIS, nor do they plan to do so in future. The vacuum beam-pipe at the EBIS is stainless steel. Thus, the C-AD expects the maximum dose rate from deuteron losses to be under 600 mrem/h.

The C-AD's RCTs will undertake radiation surveys during initial EBIS operations with deuteron beam to determine actual radiation levels due to routine beam losses. Additionally, the C-AD will place interlocking Chipmunk radiation monitors along the beam line to protect personnel should there be a fault in the deuteron beam.

Without the beam, the EBIS IH-Linac can generate radiation due to the creation and loss of field emission electrons in the RF cavity; the C-AD controls the x-ray hazard according to SBMS's requirements. The EBIS IH-Linac cavity has gap-voltage amplitudes close to 600 kV. Measured x-ray radiation levels for the 1 Hz, 200-microsecond operation of a similar cavity at CERN showed 20 mrem/h at 1 foot from the X-rays.[29] The CERN cavity had 548 kW RF input power. The EBIS IH-Linac cavity has about 600 kW RF input power.

Assuming the planned 5 Hz operation with a 40 microsecond flat top, then similar x-ray levels would be attained in the EBIS IH-Linac if the cavity walls were the same thickness; however, the C-AD designed the EBIS IH-Linac cavity with thicker walls.

From the measurements using the CERN IH-Linac cavity, the EBIS deduced that 7 mm lead shielding would reduce the x-ray level by one order-of-magnitude at the design voltage levels of the EBIS IH Linac. The thickness of the walls of the CERN IH Linac cavity is 9-mm steel upper half-shell, and 6-mm copper lower half-shell. The RSC reviewed the initial design of the EBIS,[30] and encouraged the project to reconsider using external shields; hence, they increased the thickness of the EBIS-IH cavity's walls to 5-cm steel, yielding a reduction factor of 25 to 50 compared to the CERN unit. Thus, C-AD expects x-ray levels to be 0.5 to 1 mrem/h

[29] IH Cavity Measurements by U. Ratzinger
[30] Minutes of RSC Meeting, April 12, 2006

at 1 foot from the EBIS IH-Linac cavity. The results from the C-AD's RCTs surveys[31] show that the x-ray levels are within expectations. The largest integrated dose of photons on a three-month TLD was 25 mrem. RCTs did not detect neutron radiation from the EBIS ion beams used to date, including Si and Au.

The construction of EBIS required penetrations into the Booster's shield. The C-AD conducted fault studies to confirm the design. They did not detect radiation outside the EBIS penetration into Booster, which is inside Building 930.[32] The C-AD studied a fault in the Booster and found 0.2-mrem/h outside the EBIS-to-Booster penetration in Building 930. For the three penetrations that carry cables from the EBIS into the Booster's enclosure, fault studies demonstrated that the Booster shielding near penetrations adequately protected the EBIS area in Building 930 from beam faults in the Booster enclosure.

Thereafter, the RSC recommended that the EBIS area in Building 930 downstream of the IH Linac be posted "Controlled Area – TLD Required".

The maximum credible incident for the EBIS Pre-Injector facility is exposure to neutrons from deuteron-beam losses. Exposure would occur upon the simultaneous failure of multiple Chipmunk radiation-detector interlocks and beam focusing or beam steering components. The coincident combination of those failure events is possible, but not likely. Human error when tuning the beam is more credible. The estimated exposure level could be as high as 600 mrem/h. Even if interlocks fail, the local Chipmunk alarms annunciate and only a few seconds would pass before personnel recognize an alarm and leave the area, terminating all exposure.

EBIS cooling water does not present an ionizing-radiation hazard because the beam's energy is too low to produce activation in the closed-loop cooling-water systems. As with all C-AD's water systems, periodic sampling confirms low radioactivity levels.

Estimates show no activation of soil surrounding the transfer line from the EBIS to the Booster by neutron flux from deuteron-beam losses. The activation levels in soil are a function of the neutron flux, neutron energy, the elemental abundances in the soil, their spallation- or neutron-absorption-cross sections, the attenuation of the neutrons with depth into the soil layer, and the duration of irradiation. Based on these factors, activation at any depth into soil is negligible.

Furthermore, from the beam energies involved, air activation and airborne radioactivity emissions from the facility are extremely unlikely.

Similarly, considering the beam energies involved, equipment activation is not likely. Thus, handling the beam line's components is not work with radioactive materials. Since deuteron beams may produce neutrons, the RCTs will periodically monitor beam-line components to confirm the adequacy of the radioactive-material-control program.

As a source for uranium- and depleted-uranium beams, the C-AD uses uranium at the EBIS in small quantities, tens of grams, in the form of solid metal foil inside a stainless-steel metal cup, enclosed in an evacuated glass tube. A commercial vendor builds these sources; the C-AD installs them, and evacuates the tubes to low vacuum. Uranium and depleted-uranium share the same chemical characteristics. However, they differ, with depleted uranium being 40% less radioactive than natural uranium. Because of their radioactivity, uranium and its decay products, the C-AD controls, stores safely, and discards the sources according to requirements.

The decay chain of uranium and depleted uranium consists of four primary radioactive members: uranium-238; thorium-234; protactinium-234m; and uranium-234. This chain releases

[31] P. Bergh Memorandum to D. Beavis, May 18, 2011
[32] Minutes of Radiation Safety Committee of March 20, 2007

three different types of radiation: low-energy gamma and x-rays; two alpha particles each having about 4 MeV of energy; and, two beta particles with energies ranging from 0.1 MeV to 2.3 MeV.

The following safety analysis considers the possibility of a uranium-foil fire. No other mode of dispersal warrants consideration.

From reviewing inhalation exposures at NRC-licensed and DOE-owned facilities, experience with accidental intakes demonstrated that workers closest to the point of release receive the highest internal-radiation exposure.[33,34,35,36]

In accidents involving the release of radioactive materials, experience showed that the magnitude of the maximum inhalation intake is about one-millionth, 10^{-6}, of the amount of unsealed material being processed.[37,38] Health physicists traditionally use this empirical analysis for processes that confine radioactive material within an enclosure, such as a glove box[39], hood, ion-exchange column[40], or pelletizer within a glove box.[41]

In this case, the C-AD assumes a fire is sustainable and that the uranium source burns completely. Importantly, the fraction 10^{-6} applies to inhalation intakes only, that is the likely mode of intake for trained employees.[42]

If 100 g U becomes airborne in smoke, then the empirical analysis indicates a maximum intake by an individual of 0.1 mg by inhalation.

The toxicological hazard from depleted uranium is greater than the radiological hazard. Maguire[43] lists the following intakes and possible effects: 8.6 mg causing transient renal injury; 45 mg causing permanent damage; and 240 mg causing 50% lethality. Thus, the maximum 0.1 mg intake is unlikely to cause any injury or impairment. The committed effective dose equivalent from inhaling 0.1 mg of U (uranium dioxide, Class Y) is 6 mrem.

---

[33] A. Brodsky, J. Schubert, S. Yaniv, K. Lamson, N. Wald, R. Wechsler and R. Caldwell, "Deposition and Retention of 192Ir in the Lung After an Inhalation Incident," Abstracts of the Health Physics Annual Meeting, June 18-22, 1967, Pergamon Press, 1967

[34] W. D. Norwood, Health Protection of Radiation Workers, Charles C. Thomas, Springfield, IL, 1975

[35] National Council on Radiation Protection and Measurements, Management of Persons Accidentally Contaminated with Radionuclides, NCRP Report No.65, NCRP Publications, P. O. Box 30175, Washington, DC 20014, 1980

[36] A. P. Hull, "Preliminary Dose Assessment of the Chernobyl Accident, Parts I-III," The Health Physics Newsletter, Vol. XIV No.12 and Vol. XV No.1 and No.2, Health Physics Society, 1340 Old Chain Bridge Road, Suite 300, McLean, VA 22101, 1986-1987

[37] A. Brodsky, "Determining Industrial Hygiene Requirements for Installations Using Radioactive Materials," American Industrial Hygiene Association Journal 26, pp.294-310, May-June 1965 and Health Physics 38, pp.1155-1171, June 1980

[38] A. Brodsky, "Resuspension Factors and Probabilities of Intake of Radioactive Materials in Process (or "Is 10^{-6} a Magic Number in Health Physics?")", Health Physics 39, pp.992-1000, 1980

[39] A. Brodsky, N. Wald, R. E. Lee, J. Horm and R. Caldwell, "Americium Contamination Aspects of a Drybox Incident Involving Hand Amputation" in Health Physics Operational Monitoring, Volume 3, Edited by C. A. Willis and J. S. Handloser, Gorden and Breach, NY, pp.1581-1600, 1972

[40] R. C. Thompson, Editor, "1976 Hanford Americium Exposure Incident," Special Issue, Health Physics 45, October, 1983

[41] A. Brodsky, N. Wald, I. S. Horm and B. J. Varzaly, "The Removal of 241Am from Humans by DTPA," University of Pittsburgh Department of Radiation Health Progress Report, submitted to Department of Health, Education, and Welfare, Research Grant 2ROI EC 00122-03, 22 March 1971, Appendix C

[42] A. Brodsky, "Resuspension Factors and Probabilities of Intake of Radioactive Materials in Process (or "Is 10^{-6} a Magic Number in Health Physics?")", Health Physics 39, pp.992-1000, 1980

[43] S. A. McGuire, "A Regulatory Analysis on Emergency Preparedness For Fuel Cycle And Other Radioactive Material Licensees," NUREG 1140, U. S. Nuclear Regulatory Commission, Washington, D.C. 20555, 1985

4.8. TVDG and TtB Line Shielding Analysis

The TVDG facility has a complex, varied capability for producing radiation depending on the type of ion accelerated. The energies of TVDG's accelerated ions are proportional to the charge state achieved by the ions when they undergo stripping within the accelerator tank. Because lighter ions strip to charge states comparable to their atomic numbers, they achieve a relatively high energy per u, and so are able to produce appreciable numbers of fast neutrons and the associated gamma rays when they strike a target. Heavier ions cannot strip to charge states comparable to their atomic number; therefore, they only attain a relatively low energy per u. Such particles do not produce nuclear reactions when striking a target, and thus do not generate an appreciable radiation field. Because of the facility's diverse capability for producing radiation, a very diverse access-controls system is in place; studies shown that the controls are adequate.[44]

C-AD designed the TtB shield and the TtB beam-current-monitoring device to mitigate the greatest radiation hazards that exist when transferring low-mass ions from the TVDG to Booster. The shield alone is more than adequate for protecting against high-mass heavy-ion losses because the intensity of the heavy-ion beam and/or individual nucleon energies are comparatively much less.

After examining the experimental needs at the RHIC, it was determined that when used at RHIC the annual, total number of deuterons should be about $7x10^{17}$. This accounts for normal beam losses and deuteron beam tuning in the TVDG, TtB, Booster, AGS, and AtR.

The C-AD observed a 10% beam loss when the TtB line delivers beam to downstream users. TVDG did not identify specific points of chronic loss, and the distribution of these losses along the TtB is unknown. In tuning the TtB line itself, beam loss is inherent in the process because operators insert wire chambers and Faraday cups at various places along the line. Adding these losses suggests a total loss at a single point of about $2x10^{16}$ deuterons per year. The C-AD estimates the maximum incremental loss at a single point to be about $4.5x10^{13}$ deuterons per hour.

The C-AD planned a normal running current in the TVDG accelerator room of 67 nA of deuteron beam at 12 MeV, with a normal terminal voltage of 6 MV. For a full-energy beam fault, TVDG's personnel estimated that radiation levels from deuterons would be about 50 rem/h at one foot at 0° from a 30-MeV deuteron beam. For a full-intensity beam fault, the radiation level could be a few hundred rem/h at 1 foot at 0° if the current is intentionally tuned to the maximum 10 μA. Thus, the RSC required dual redundant interlocks in the TVDG accelerator room during deuteron operations. However, two events are needed to trigger these fault conditions; an intensity or voltage fault, and stopping the beam at a single point. Table 4.8 shows the estimates of radiation levels from different loss conditions for deuteron beams.

[44] J. Benjamin, C. Carlson, J. Throwe and F. Zafonte, Building 901A Shielding Effectiveness Studies, 7/92 and 4/94, Tandem Van de Graaff Facility, August 1994, Appendix XI of the TVDG SAD, June 1995

Table 4.8 Calculated Radiation Levels in the TVDG Accelerator Room and the TtB

Loss Description	Deuteron Current	Terminal Voltage	Instantaneous Dose Equivalent at 1 foot at 0°, rem/h
TVDG Normal Beam, Point Loss (single fault)	67 nA	6 MV	1.5
TVDG Full Energy Beam, Point Loss (double fault*)	67 nA	15 MV	50
TVDG Full Current Beam, Point Loss (double fault*)	10,000 nA	6 MV	230
TtB Normal Beam, Anticipated Beam Loss (routine loss)	6.7 nA or 10% in transit to RHIC ($4.5x10^{13}$ deuterons for one hour at a point)	6 MV 6 MV	0.15 0.04
TtB Normal Beam, Point Loss (single fault)	67 nA	6 MV	1.5
TtB Full Current Beam, Point Loss (double fault)	200 nA	6 MV	4.5

* Double fault - intensity or voltage fault coupled with stopping the beam at a single point.

The RSC approved the parameter limits for the TtB for a d-Au run for RHIC at 18 MeV deuterons[45], and required a 200 nA interlock and an alarm at 80 nA, after determining that these controls were adequate to keep dose rates well within the bounds defined by the double-fault condition in Table 4.8. The parameters allowed for the FY08 deuteron run were 20 MeV deuterons, 200 nA interlock level, and a 120 nA alarm level.[46] The C-AD lowered the beam current's limit in the ASE for TVDG to 4 microA; the previous limit of 10 microA cannot be reached.

Skyshine dose from the TVDG and TtB line is insignificant due to the particles' very low energies.

4.9. Booster Shielding Analysis

Among the three operating modes of the Booster, which are the high-intensity unpolarized proton beam, the polarized proton beam, and heavy-ion beams, the first one represents the greatest ionizing radiation hazard. Except for the shielding over the first dipole following the stripper for heavy ions, the C-AD based their calculations for shielding and activation on the fluxes associated with unpolarized protons. Table 4.9.a lists the Booster beam's fluxes and assumed beam losses.

[45] K. Yip, Increased Neutron Dose Due to Increased Deuteron Energy in the TTB Line, December 15, 2002
[46] RSC Minutes of Oct. 17, 2007

Table 4.9.a Summary of Booster Ion Beam Flux and Ion Beam Loss

Parameter	Unpolarized p A = 1	Polarized p A = 1	Sulfur A = 32	Gold A = 197
Beam Flux (s^{-1})	$1x10^{14}$	$1.5x10^{12}$	$1.5x10^{10}$	$3.2x10^{9}$
Injection Loss (s^{-1})	$3x10^{13}$	$3x10^{11}$	$3x10^{8}$	$6x10^{7}$
Injection Energy (MeV/nucleon)	200	200	4.688	1.066
Acceleration Losses (s^{-1})	$6x10^{12}$	$1.5x10^{10}$	$1.5x10^{8}$	$3.2x10^{7}$
Extraction Losses (s^{-1})	$2x10^{13}$	$1.5x10^{10}$	$1.5x10^{8}$	$3.2x10^{7}$
Stripper Losses	NA	NA	$1.5x10^{9}$	$1.6x10^{9}$
Extraction Energy (GeV/nucleon)	1.5 to 2.2	1.5 to 2.2	0.967	0.35
Maximum Credible Loss at Extraction Energy	$1x10^{14}$	$1.5x10^{12}$	$1.5x10^{10}$	$3.2x10^{9}$

For a beam loss, C-AD assumes 50% of it occurs at a single point, such as the dump/catcher while the remainder distributes uniformly around the Booster Ring. For extraction loss, 80% of it is on the septum and 20% is on the first dipole downstream. The maximum credible unplanned loss is the complete loss of the beam at any single point at maximum energy for a short period, less than a few seconds due to interlocks and alarms. Generally, the only distinction between protons and heavy ions concerns the total mass stopping power from direct exposure to primary beam particles. The C-AD prevents direct exposure to beams via an ACS for accessing the Booster enclosure. For shielding calculations, the C-AD treats heavy ions as an independent assembly of nucleons with a beam flux equal to the particle flux multiplied by the atomic mass number. All radiological controls at the Booster meet the C-AD and BNL requirements for posting, monitoring, and interlocking radiological areas.

Gollon,[47] Casey[48] and Lessard[49] analyzed the shielding of the Booster-tunnel's enclosure and the interfaces to the 200 MeV Linac and the AGS. The C-AD provided sufficient shielding to ensure that radiation levels for normal operating conditions meet the criteria of BNL and the DOE. Their analysis of fault conditions ensures that unacceptable radiation levels are controlled. The C-AD chose the types of warning- and access control-systems at Booster consistent with the C-AD OPM 9.1.11 area classifications; a classification system that C-AD and its predecessor departments established in 1974.

Tables in the remainder of this section list results of dose-rate calculations for Booster faults. The C-AD computed these values as upper limits by forcing the beam loss to occur at a single point. For the Booster to AGS, the C-AD assumed a 2.2 GeV unpolarized proton beam to bound the computed doses; however, the shield adequately protects against muons up to 3 GeV.

[47] P. J. Gollon, Booster Tunnel Shield Calculation, Booster Technical Note #66, October 24, 1986

[48] W. R. Casey, Additional Booster Shielding Calculations, Booster Technical Note #93, September 28, 1987

[49] E. T. Lessard, Booster Shield Wall/Door Analysis, March 30, 1989, Appendix 13.2

Table 4.9.b Summary of Booster Flux Loss and Radiation Levels

Loss Flux Type (particles/s)	Area of Interest	Nucleon Energy	Routine Peak Dose Rate (mrem/h)	Peak Fault Dose Rate[50] (mrem/h) (Maximum Proton Flux)
Injection ($3x10^{13}$)	Booster Tunnel Top	200 MeV	0.0009	30 ($4x10^{14}$)
Injection ($3x10^{13}$)	Booster Tunnel Side	200 MeV	0.0002	0.6 ($4x10^{14}$)
Acceleration ($6x10^{12}$)	Booster Tunnel Top	700 MeV	2	2500 ($1x10^{14}$)
Acceleration ($6x10^{12}$)	Booster Tunnel Side	700 MeV	0.4	150 ($1x10^{14}$)
Fault ($1x10^{14}$)	Booster Tunnel Top	2.2 GeV	NA	6800
Fault ($1x10^{14}$)	Booster Tunnel Side	2.2 GeV	NA	450
Extraction ($2x10^{13}$)	B914 Roof Over Septum	2.2 GeV	300	1650 ($1x10^{14}$)
Extraction ($1x10^{14}$)	Remaining B914 Roof	2.2 GeV	3	205,000
Studies ($1.5x10^{13}$)	Booster Tunnel Over Dump	2.2 GeV	20	130 ($1x10^{14}$)
Studies ($1.5x10^{13}$)	Fence Near Dump	2.2 GeV	0.3	2 ($1x10^{14}$)
Fault ($1x10^{14}$)	AGS from Booster	2.2 GeV	NA	750
Fault ($1x10^{14}$)	AGS Labyrinth. Door from Booster	2.2 GeV	NA	1350
Fault ($4x10^{14}$)	Booster from Linac	200 MeV	NA	240
Fault ($1.3x10^{13}$)	Booster from AGS	28 GeV	NA	1400
Fault ($1.3x10^{13}$)	Booster Labyrinth. Door from AGS	28 GeV	NA	2500
Extraction ($1.6x10^{9}$) - Gold	B914 Roof Over Stripper	1.066 GeV	5	10 ($3.2x10^{9}$)
Extraction ($6x10^{11}$)	B914 Plug Door	2.2 GeV	2.7	680 ($1x10^{14}$)
Extraction ($6x10^{11}$)	B914 Man-Gate	2.2 GeV	0.7	160 ($1x10^{14}$)
Extraction ($6x10^{11}$)	B914 North Entrance	2.2 GeV	0.3	70 ($1x10^{14}$)

The C-AD assumed injection losses of 30% ($3x10^{13}$ p/s) at 200 MeV. Assuming that all such losses occur at a single point, i.e., the dump/catcher, a loss produces a peak radiation level of 0.9-µrem/h outside the shield at the top of the berm and less than 0.2-µrem/h horizontally. The C-AD shielded the dump/catcher internally with one meter of a heavy concrete equivalent, and externally with 5.5 m of sand. The Booster Ring was shielded with 4.6 m of sand vertically, and 6.1 m horizontally. Therefore, away from the dump area, injection-energy protons may cause a fault level of 30-mrem/h at the berm top and 0.6-mrem/h at its side for a short period, less than few seconds due to interlocks and alarms.

Normal losses during acceleration are 1% or less, with an average energy of 700 MeV. Conservatively assuming the occurrence a 10% loss at the dump/catcher, normal radiation levels during unpolarized proton running are 2 mrem/h at the top of the Booster's berm near the dump,

[50] Fault levels are detectable by Chipmunk radiation monitors after one pulse. When a Chipmunk detects the fault, the ACS turns the beam off and the accidental dose to an individual in unfenced areas near Booster is well below the C-AD design guideline of 20 mrem.

and 0.4 mrem/h at its side. However, due to potential radiation levels in a full-unpolarized proton fault at other locations of the Booster the C-AD enclosed the Booster berm with a locked fence and limited access to authorized individuals.

Losses at extraction are about 30% at energy of 2.2 GeV. C-AD assumed these losses occur on the extraction septum (80%), and the first dipole magnet (20%) there after inside Building 914. This building, acquired by the C-AD from the decommissioned 50 MeV Linac, has a structural limitation of 1.8 m of soil overhead. Sixty centimeters of iron rising to 2.3 m in the forward direction (space permitting) reduces the routine exterior radiation-level atop of Building 914 to about 300 mrem/h over a 40 m^2 area during operation of an unpolarized proton beam. Most of the remaining roof registers about 3 mrem/h for routine extraction-loss conditions.

Since the internal iron shield does not fully enclose the transfer line between the Booster and the AGS, momentary peak levels at 57-mrem/s could occur under full fault conditions ($1x10^{14}$ p/s). Heavy ion beams would produce about three orders-of-magnitude less. C-AD fenced and secures the roof area above Building 914, and controls access using C-AD OPM 4.46. In addition, the C-AD installed redundant radiation monitors in this region to interlock the beam and limit the duration of the fault. Based on experience at the AGS, radiation monitors detect fault levels after one pulse. When high levels of radiation are detected on the roof the beam is turned off; the fault dose to a person then is much less than the design guideline of 20 mrem since the nearest accessible area is 18 m away.

The first dipole after the heavy-ion stripper in the transfer line between the Booster and AGS requires overlying shielding. Projected energy losses are $1x10^{11}$ GeV/s for Au ions. Poorly stripped ions sweep out of beam at this first dipole. A local iron shield 36 cm-thick reduces exterior levels to less than 5 mrem/h on the roof of Building 914. Fault levels are 10 mrem/h.

During Booster accelerator studies, undertaken by physicists when tuning it, showed that the Booster's beam dump can receive the full beam. They demonstrated this finding with unpolarized protons at $1.5x10^{13}$ p/s at 1.5 GeV; nevertheless, 2.2 GeV is conservatively assumed for radiation protection calculations. The thickness of the steel dump and the iron shield surrounding the dump contribute an additional equivalence of 1 m of heavy concrete. The sand berm over the dump is 5.5 m thick, and extends 15 m horizontally from the dump. The external radiation levels over the top of the berm were 20 mrem during a one-hour study and about 0.3 mrem at the outside fence; fault levels are about six times these levels. In recent years, the need for studies of high-intensity unpolarized proton has diminished. Booster studies do not occur now for more than 500 h/y, and physicists now undertake studies the using much less intense beams of polarized protons or heavy ions.

C-AD allows routine occupancy near the inhabitable side of the shield wall of Building 914, at the man-gate opening. Because of the possible fault levels of 300-mrem/h for a few seconds from high-intensity unpolarized-protons, the C-AD installed an alarmed/interlocked radiation monitor in this building's inhabitable portion. The entrance to Building 914 is 27 m from the shield wall and man-gate. The dose rate at the North Entrance to Building 914 routinely remains below 0.01-mrem/h. C-AD measured the highest levels, near the shield wall and man-gate entrance at 0.1-mrem/h during high-intensity unpolarized proton running.

The C-AD placed at least 2.4 m of concrete shielding at the interface between the Booster tunnel and the Linac's 200 MeV high-energy beam transport (HEBT) tunnel. C-AD estimated the radiation at the Booster side of the interface shield at less than 0.4 mrem/h, assuming a planned loss of less than 1% of the high-intensity beam in the Linac's HEBT. A fault loss of the

maximum Linac beam somewhere in the HEBT line near the interface to the Booster will cause 275-mrem/h in the Booster's tunnel. Chipmunks would detect such losses in the Linac, and automatically turn off the beam within a few seconds.

Multiple redundant lockout of bending magnets in the Linac/Booster's transfer line inhibit the direct transfer of Linac beam into the Booster tunnel unless it is clear of personnel and secure for normal operation.

Certain special areas, where the side shield is unusually thin because of space restrictions, such as in the interface of the Booster with the Linac building and Building 914, have concrete or steel inserts to assure at least 6 m of equivalent earth. This keeps radiation levels below 0.3-mrem/h under normal high-intensity beam-loss conditions.

The C-AD designed the side shielding at the interface between the Booster and the AGS to be the equivalent of 6 m of earth side shielding, so staff can enter the AGS independently of the Booster under any beam condition. This criterion is necessary because the Booster may be operating with heavy ions for NASA experiments at NSRL, while the AGS is under maintenance. A labyrinth passage joins the AGS and the Booster Rings, with High Hazard Radiation Area security doors at each end. Opening these doors turns off both machines. During Booster operation while the AGS tunnel is open, the interlocks on the beam-transfer dipole in the Booster's extraction channel inhibit the transfer of primary beam to the AGS. The worst credible accident, viz., the loss of high-intensity Booster beam at the Building 914 wall near the AGS, causes levels in the AGS tunnel to rise to 750-mrem/h for 1 to 2 seconds. The reverse case is the operation of the AGS while the Booster tunnel is open for maintenance. Whilst this cannot occur under the current configuration, it is included should it be used in the future. For operating the AGS at a maximum beam flux of $2x10^{13}$ protons per pulse at 1.5-second repetition rate, the worst case of total beam loss causes 1400 mrem/h in Building 914 for approximately 1 to 2 seconds. Thus, C-AD has radiation monitors interlocked to each machine's operations.

The C-AD measured as $4x10^{-5}$ the transmission of dose rate from losses in the AGS through the AGS-Booster labyrinth. Extrapolating from this value, the worst-case level is 2500 mrem/h. The reverse, i.e., the worst-case level at the AGS door to the labyrinth from a loss in the Booster is 1000 mrem/h, assuming the applicability of the $4x10^{-5}$ transmission value.

Stevenson and Thomas give the dose equivalent, on an arbitrary scale with distance, from skyshine due to neutrons emitted from the surface of an overlying shield.[51] Neutrons emerging from the top of the shield contribute to dose equivalent on the ground several thousand meters away via interactions in the air column above the shield.

The radiations doses at on-site facilities are slightly greater than those at the site's boundary, depending on assumptions about local shielding on buildings and the energy of scattered neutrons. The neutrons, which scatter off the air back to the ground toward these buildings, have an energy distribution nearly equivalent to the fast flux from a PoBe source (>0.5 MeV); 15 cm of concrete or equivalent local shielding attenuates the skyshine neutrons by about 20-fold. Such attenuation increases the number of leakage neutrons that correspond to a given dose equivalent at a given location, and is included in the onsite estimates for skyshine.

Operators occupy Building 931 facility (BLIP), which is at 80 m from the Booster, for about four hours daily during the day shift only. This corresponds to one sixth of the Booster's operating hours. Occupancy of the former BGRR complex, Building 911 and Building 919 is 8

[51] G.R. Stevenson, R.H. Thomas, "A Simple Procedure for the Estimation of Neutron Skyshine from Proton Accelerators", Health Phys. 46, 115-122 (1984)

hours per day, one third of an operating day for the Booster. Therefore, it is reasonable to assume that Building 931 is the most restrictive location for the yearly skyshine dose from Booster operation.

The C-AD used ICRP Publication 21 for assessing the dose equivalent per unit neutron fluence for a l/E spectra.[52] They estimated a Booster operating schedule of 200 days per year, and conservatively assumed the polarized proton- and heavy ion-modes make up 100 days of the annual running period, as do the unpolarized protons. Additionally, Booster studies require 70 operating days and about one third of the scheduled operating hours during those days. In studies at the AGS Ring, skyshine neutrons from a point loss emerge from a berm-shield surface area of about $2x10^2$ m^2; the C-AD used the same surface area at the Booster.[53] Based on these assumptions, Table 4.9.c lists the specific estimates of annual dose from skyshine due to Booster operation; these estimates are conservative ones, and much less than 5 mrem at the site's boundary, and less than 25 mrem on site.

Table 4.9.c Skyshine Dose for Booster Operation

Loss Location	Nucleon Energy (MeV)	Site Boundary Dose (mrem/y)	Closest Occupied Building Dose (mrem/y)
Injection loss at dump/scraper	200	$6x10^{-6}$	$7x10^{-5}$
Acceleration loss at dump/scrapper	700	$4x10^{-3}$	$2x10^{-2}$
Extraction septum loss	1500	$2x10^{-1}$	$9x10^{-1}$
Heavy ion stripper loss	1066	$1x10^{-1}$	$6x10^{-1}$
Studies losses at dump/scrapper	1500	$4x10^{-2}$	$2x10^{-1}$
Total		$3.4x10^{-1}$	$1.9x10^{0}$

4.10. NASA Space Radiation Laboratory (NSRL) Shielding Analysis

Table 4.10.a lists the routine, maximum, and faulted integrated beam from the NSRL safety analyses.[54] The NSRL uses a variety of beams and beam energies, and C-AD operations keeps track of total integrated beam into the facility. The integrated beam is the product of hadrons and their energy, summed over all ions entering NSRL's beam line from the Booster. For example, one Fe-56 ion at 1 GeV per u is 56 GeV; 10^{12} Fe-56 ions is $5.6x10^{13}$ GeV.

Because of the variety of ions and ion energies at NSRL, the C-AD used several conservative assumptions for beam energy and intensity for radiation-protection purposes.

[52] International Commission on Radiological Protection, Data for Protection Against Ionizing Radiation from External Sources: Supplement to ICRP Publication 15, ICRP Publication 21 [Pergamon Press, October (1973)].

[53] K. Brown, J. Glenn, S. Musolino, A. Stevens, R. Thern, "AGS Shield Tests", AGS Studies Report Number 245 (November 4, 1988)

[54] NSRL SAD, 2001

Table 4.10.a Summary of Routine, Maximum, and Faulted Beam for the NSRL

Quantity	Maximum Value
Annual Energy Flux from Booster SEB	10^{17} GeV in one year
Hourly Energy Flux from Booster SEB	$6x10^{14}$ GeV in one hour
Annual Energy Flux on the NSRL Beam Stop	$3x10^{16}$ GeV in one year
Hourly Energy Flux on the NSRL Beam Stop	$6x10^{14}$ GeV in one hour
Annual Energy Flux on NSRL Targets (0.25 nuclear-interaction lengths)	$3x10^{16}$ GeV in one year
Hourly Energy Flux on NSRL Targets (1.0 nuclear-interaction length)	$6x10^{14}$ GeV in one hour
Maximum, Single Event, Non-routine Point Loss at any Location[55]	$6.75x10^{15}$ GeV

Table 4.10.a prescribes a maximum hourly limit of beam at NSRL as $6x10^{14}$ GeV. Computing prompt radiation using the Tesch formula,[56] the maximum hourly dose rate outside the NRSL shielding is 4.7-mrem/h for 3-GeV protons. Averaged over a year using different ions and energies, the actual hourly dose is much less. Based on the CASIM, a program for high-energy particle ***cas***cade-***sim***ulations,[57] the hourly dose rates at the top of the berm are bounding for the NSRL's shield.

The C-AD estimated the prompt radiation at the nearest point to the Target Room by evaluating the labyrinth connecting the Target Room with the Support Building 958 that NSRL Users and C-AD employees occupy during NSRL operations. This value translates to 0.01-mrem/h for $6x10^{14}$ GeV for 3-GeV protons.

Both the estimate for the skyshine dose from NSRL operations and that for groundwater activation are sensitive to targeting conditions. The maximum integrated beam values listed in Table 4.10.a assume that the beam can be incident on either a target or the beam stop 100% of the time.

The skyshine dose rate was determined by first estimating the number of neutrons greater than 20 MeV emerging from the earthen berm-shield's surface, then applying a skyshine formula. The C-AD estimated the number of neutrons from CASIM calculations performed at 2 GeV incident-energy, in a simplified approximation of a geometry that overestimates the emerging neutrons. Specifically, the berm was assumed to have a circular transverse cross-section, and the neutrons were summed over a ±45° section centered on the beam line.

The C-AD performed CASIM calculations with beam incident on the beam dump, and on a 0.25 interaction length plastic target. The worst case was with the target present, where the

[55] To be less than 20 mrem per fault, the maximum, single-event, non-routine point-loss was assumed as $1.5x10^{14}$ 5-GeV nucleons/sec for 9 seconds from the Booster into the NSRL. Nine-seconds is the assumed response-time of fixed-area radiation monitors to interlock the beam. Thus, a single-event, high-energy nucleon loss of $6.75x10^{15}$ GeV is the maximum fault assumption for any location at the NSRL. It is noted in BNL Memorandum, J. Geller to D. Beavis, RSC Chair, "Time to Chipmunk Interlock for Large Radiation Faults," March 2, 1999 that tests of the chipmunks' internal circuitry yield an absolute minimum response time of 0.65 seconds; nine seconds is adopted to include the response time of the external circuitry that includes relays and critical devices

[56] K. Tesch and H. Dinter, Radiation Protection Dosimetry, Vol. 15 No. 2 pp. 89-107 (1986)

[57] The CASIM code overestimates the dose in the forward direction compared to the actual condition estimated by improved codes, such as MCNPX, at the GeV-energy scale

number of neutrons greater than 20 MeV emerging upward from the shield was 2×10^{-5} per 2 GeV proton. The closest uncontrolled building is Building 919, and the computed dose rate is about 0.02 mrem/y.

The Target Room in Building 958 is ventilated continuously to reduce odors from the specimens; the estimate of air activation therein was made using MCNPX. The beam path length in air is 28 feet, including the length of the re-entrant beam-dump cavity. The concentrations of various radionuclides were estimated using appropriate cross-sections and beams at the NSRL.[58] For ^{39}Cl and ^{38}Cl, produced by spallation reactions with the argon in Target Room air, the C-AD derived cross sections using Rudstram.[59] Based on the maximum annual integrated beam of 3×10^{16} GeV per year on the beam stop given in Table 4.10.a, Table 4.10.b summarizes the annual-activity concentrations averaged over the Target Room's volume and the annual production rates. The C-AD conservatively computed these values ignoring radioactive decay and the Target Room's ventilation.

Table 4.10.b Annual-Activity Released at NSRL

Radionuclide of Interest	Volume Averaged Annual-Activity Concentration, Ci/cc	Annual Production Rate, Ci/y
^{41}Ar	2.2×10^{-11}	2.6×10^{-3}
^{39}Cl	1.2×10^{-16}	1.4×10^{-8}
^{38}Cl	4.3×10^{-16}	4.9×10^{-8}
^{35}S	1.4×10^{-15}	1.6×10^{-7}
^{32}P	9.1×10^{-15}	1.0×10^{-6}
^{28}Al	7.0×10^{-13}	8.1×10^{-5}
^{22}Na	5.6×10^{-17}	6.3×10^{-9}
^{15}O	6.7×10^{-9}	7.4×10^{-1}
^{14}O	2.8×10^{-10}	3.2×10^{-2}
^{13}N	1.6×10^{-9}	1.8×10^{-1}
^{11}C	7.0×10^{-10}	8.1×10^{-2}
^{7}Be	1.9×10^{-13}	2.1×10^{-5}
^{3}H	7.7×10^{-15}	8.8×10^{-7}

Assuming that the production rates are the release rates, the dose to the maximally exposed individual, MEI, of the public using the Clean Air Act Code CAP88-PC is less than 10^{-4} mrem/y.

The continuously operating ventilation system to remove odors from the Target Room maintains the radionuclide concentrations therein at insignificant values. Should the ventilation be off and irradiations and entries still are made over an 8-hour interval, then the dose to an individual who spends an hour in the Target Room would be a small fraction of a mrem.[60] Thus, there are no significant hazards from loss of the Target Room's ventilation.

---

[58] NSRL SAD, 2001

[59] Barbier, M., Induced Radioactivity, Section 2.3. North-Holland Publishing Company, 1969

[60] R. Karol, Dose to Individual in BAF Target Room Following Ventilation Failure, March 19, 2001 (Revised 4/19/01), Appendix 12

4.11. Alternating Gradient Synchrotron (AGS) Shielding Analysis

In estimating the degree of radiation risk, the C-AD made certain assumptions about the beam's intensity and beam loss at the AGS, based on the design of the AGS's shielding: Table 4.11.a gives these values. The fundamental assumption is that C-AD designed the shield to mitigate the greatest radiation hazard. Thus, the AGS was analyzed assuming a maximum beam intensity of $1x10^{14}$ unpolarized protons per second.

Table 4.11.a Summary of Operational Beam Loss Assumptions for AGS Ring

Type of Loss and Beam Energy	Spot Loss Near Thick Shield (% of beam)	Spot Loss Near Thin Shield (% of beam)	Distributed Loss (% of beam)
Injection Losses (1.5 – 2.2 GeV)	8	1	1
Transition Losses (7 GeV)	0.9	0.05	0.05
Extraction Losses (27.5 GeV)	0.9	0.05	0.05
Studies Losses (10 GeV)	4.9	0.05	0.05

Table 4.11.a assumes that protons inject into the AGS Ring through the Booster. Direct injection into the AGS is possible by transporting beam from the Linac through HEBT but not without modifications; it is included in the discussion should it be used in future. In this present mode of operation, injection losses are approximately 60% at 200 MeV, based on the measurements reported during the 1986 Slow Extracted Beam run. This lost energy flux at injection, $1.2x10^{13}$ GeV/s, is well below the 8% at 1.5- to 2.2-GeV using the Booster injection scenario. Thus, the injection losses from Booster operation bound the dose consequences for either mode of operation.

Table 4.11.b explicitly shows unpolarized proton losses. The C-AD assumes additional shielding by magnets of 0.42 m of iron pole tip to attenuate radiations rising vertically towards the top of the shield. Experience and measurements show that when viewed indirectly through radiation-survey measurements at the outer surface of a thick shield (several m thick), a point loss inside the AGS Ring has a characteristic source length of 16 m outside the AGS Ring shielding for the most localized loss.

Table 4.11.b Proton Beam Loss and Location in the AGS Ring

Loss Type	Protons Lost per Year	Protons Lost per Meter-Year	Energy (GeV)	Concrete Thickness (m)	Earth and Soilcrete[61] Thickness (m)
Injection[a]	6.6×10^{19}	4.1×10^{18}	1.5 – 2.2	0.3	6.0
Injection[b]	8.2×10^{18}	1.0×10^{16}	1.5 – 2.2	0.3	5.7
Injection[a]	8.2×10^{18}	5.1×10^{17}	1.5 – 2.2	0.3	4.5
Transition[a]	7.4×10^{18}	4.6×10^{17}	7	0.3	6.3
Transition[b]	4.1×10^{17}	5.1×10^{14}	7	0.3	5.7
Transition[a]	4.1×10^{17}	2.5×10^{16}	7	0.3	4.5
Ejection[a]	7.4×10^{18}	4.6×10^{17}	27.5	0.3	6.3
Ejection[b]	4.1×10^{17}	5.1×10^{14}	27.5	0.3	5.7
Ejection[a]	4.1×10^{17}	2.5×10^{16}	27.5	0.3	4.5
Studies[a]	4.2×10^{19}	2.6×10^{18}	10	0.3	6.3
Studies[b]	4.1×10^{17}	5.1×10^{14}	10	0.3	5.7
Studies[a]	4.1×10^{17}	2.5×10^{16}	10	0.3	4.5

a: 16 m spot loss
b: Loss distributed around Ring, 800 m

Essentially, two types of shield exist at the AGS Ring. One is a 6 to 6.9 m thick earth and soil-cement shield covering the major areas overlying the injection, transition, ejection, and studies losses. The other is a 4.5 to 5.1 m thick earth and soil-cement shield, covers the remaining parts of the AGS Ring. The beam's height is 3.3 m below the concrete roof of the AGS Ring, which supports the overlying layers of soil and soil-cement. Table 4.11.c lists the location of specific thicknesses of top shield relative to the AGS Ring's sectors.

Table 4.11.c Thickness of Top Shield

Top of AGS Ring Sector	Shield (meters)
G20 - I13	6.0
I13 - J5	5.1
J5 - K5	6.3
K5 - L10	5.1
L10 - A15	6.0
A15 - B10	6.0
B10 - D10	4.5
D15 - E20	4.5
E20 - F20	6.9

The section F20 through G20 is the AGS's target-building portion of the Ring, and the thickness of the shield top is 2.4 m heavy concrete or more, i.e., 4.7 m earth equivalent or more.

[61] Soilcrete is a soil-cement mix. Its density is between that of soil and concrete and is about 2 g/cm^3. C-AD added soilcrete as an outer layer of shield in 1993 to direct the load from overlying layers of the AGS earth-berm shield toward the footings of the arching shield. A plain layer of earth would have overloaded the roof of AGS. The addition of a shield layer allowed for greater beam intensity in AGS that was now possible due to the start-up of the Booster.

The shield thickness for the berm top is not continuous; the following penetrations punctuate the berm:

- 2 escape hatches
- A series of pipes with diameter from 20- to 60 cm
- 5 fan houses
- 4 labyrinths
- 2 plug doors
- 1 gate
- 1 trench
- 1 cable run
- The north and south wiring tunnels
- The FEB tunnel
- The north conjunction area
- The target building

Additionally, a roadway crosses the berm top between D10 and D15 and near J10. The earth shield beneath the roadway is 3 m thick.

For a planned beam loss, the assumption is that part of it occurs at a single place, such as the internal dump/catcher at J10 shielded by the thicker part of the berm, and the remainder of the loss distributes uniformly in the AGS Ring. Additionally, as viewed from the outside of a shield, the C-AD assumes a 16 m loss to occur routinely at any thin part of the Ring shield, viz, rather than the less conservative distributed loss.

Tables 4.11.d and 4.11.e list the computed dose-equivalent rates for the assumed beam losses in the AGS. These overly conservative estimates demonstrated that adequate shielding is in place. Many areas have had shielding upgrades not reflected in these computed dose rates. Protection for the penetrations in Table 4.11.e is shielding, interlocking radiation-monitors, fences, and access controls.

Table 4.11.d AGS Radiation Level Summary

Shield Type	Area of Interest	Operation	Nucleon Energy (GeV)	Routine Dose Equivalent Rate (mrem/h)	Fault Dose Equivalent per AGS Pulse[62] (mrem/pulse)
Thin				0.5	0.02
Thick			0.3		0.001
Distributed	AGS Ring Top	Injection	1.5 – 2.2	0.002	-
Thin				0.1	0.1
Thick				0.08	0.005
Distributed	AGS Ring Top	Transition	7	0.003	-
Thin				0.5	0.4
Thick				0.3	0.02
Distributed	AGS Ring Top	Extraction	27.5	0.001	-
Thin				0.2	0.02
Thick				0.6	0.005
Distributed	AGS Ring Top	Studies	10	0.0004	-

Table 4.11.e Fault Levels at AGS Ring Penetrations[63]

Area of Interest	Fault Dose Equivalent per AGS Pulse (mrem/pulse)
C-14 Escape Hatch	30
Booster/AGS Interface	5
Linac/AGS Interface	30
Road over AGS Berm	50
North Conjunction Area	50
Pipes (Weakest Case)	100
Fan House Ducts (Weakest Case)	500
Entrance Labyrinths (Weakest Case)	10
Plug Doors (Weakest Case)	10
AGS-Booster Trench	500
Side Wall Interface w/Target Bldg 912 (Weakest Case)	10,000

[62] 10^{14} p/s at 0.84 Hz. In appropriate areas, fault levels are detectable by radiation monitors instantaneously, and if interlocked, the beam will shut down within 9 seconds. The C-AD estimates that three full-energy AGS beam-spills may occur with this 9-second interval at the current repetition rate of 0.42 Hz. For areas where each fault may produce more than 20 mrem, a system of access controls, such as barriers and locked fences are used. The C-AD classifies these areas into one of the categories described in C-A-OPM 9.11.1.

[63] The attenuation factors are from the Beavis Report (D. Beavis, Ring-Me, Potential Radiation Fault Levels from Beam Faults in the AGS Ring, AGS/EP&S/ Technical Note No. 138, October 1991). Beavis multiplied the source term by 3.3 for this tabulation to account for the potential 10μA proton beam operations at 100% duty factor (3000 AGS pulses/h). Protection is shielding, interlocking radiation monitors, fences, and access controls.

Skyshine and direct radiation at buildings close to AGS is a function of beam loss at J-10, the location of the transition and extraction losses. Near J-10, beginning at the onset of catching and scraping for studies, transition, and extraction losses, and extending at least 15 m past their most forward point, there is an overlying earth shield 6.3 m thick, plus 0.6 m concrete with a berm rise over run of 1 to 2. It reduces annual dose equivalent in Buildings 919 and 921 below 25 mrem in one year for an individual.

If J-10 is not used, studies, transition, and extraction losses occur near E-20. Beginning at the onset of these losses and extending at least 15 m past the most forward point at which they occur, there is an overlying earth shield 6.9 m thick plus 0.6 m concrete. The side of the berm has a rise over run of 1 to 2. This shield reduces dose equivalent from skyshine and direct radiation in Building 911 to less than 25 mrem in one year.

Skyshine and direct radiation from injection losses at the AGS affects Buildings 931A and 931B. At the onset of injection losses and extending at least 15 m beyond their most forward point, there is an overlying earth shield at least 5.1 m thick plus 0.6 m concrete. The berm rise over run is 1 to 2. This shielding reduces dose equivalent to below 25 mrem in one year for persons in Buildings 931A and 931B.

In analyzing direct radiation through the AGS's berm sides, the C-AD visualized its Ring shield as 25 slabs of side shield of varying thickness to estimate the number of emerging neutrons that contribute to dose equivalent at a distant point. The closest point in the analysis is 15 m from the base of the AGS berm, viz., the approximate location of the fence. The analysis additionally includes a direct radiation component from neutrons emerging from the top of the berm. The furthest point used in calculating direct radiation exposure is 150 m. The C-AD did not take credit for additional shielding from interposed buildings, trees, and hills.

For archival purposes, the authors note that the C-AD's predecessor, the AGS Department, formed an AGS Ring Shield Upgrade Group in 1988 to define the maximum beam losses for future running, and to prepare a proposal for additional radiation protection. Their work is described in several papers.[64, 65, 66, 67, 68, 69, 70, 71, 72, 73, 74] The C-AD used simple analytical

---

[64] Th. Sluyters to D. I. Lowenstein, "AGS Ring Shield Upgrade Group, BNL Memorandum, July 26, 1988

[65] G. Bennett, "Skinny Shield Studies/Calculations," Informal Note (July 19, 1988)

[66] E. T. Lessard to AGS Ring Shield Upgrade Group, "Design Criteria," BNL Memorandum, August 9, 1988

[67] AGS Staff, Shielding of the AGS from the Conversion Program, Accelerator Department, Brookhaven National Laboratory, Upton New York, 11973, A Report Prepared for the AEC Advisory Panel on Accelerator Safety (June 15, 1966)

[68] G. Bennett, L. Blumberg, C. Distenfeld, H. Foelsche, W. Moore, T. Toohig and G. Wheeler, Shielding of the North Experimental Facility and the Slow External Beam Extension, Accelerator Department, Brook haven National Laboratory, Upton New York, 11973, A Report Prepared for the AEC Advisory Panel on Accelerator Safety (February 25, 1970)

[69] A. J. Stevens to J. W. Glenn, "Preliminary Estimate of Skyshine from AGS Ring," Informal Memorandum, October 10, 1988

[70] E. T. Lessard to J. W. Glenn, "AGS Ring Shielding Upgrade Group and Goals," BNL Memorandum, November 4, 1988

[71] K. Brown, J. W. Glenn, S. Musolino, A. Stevens, R. Thern, "AGS Shield Tests," AGS Studies Report, Number 245 (November 21, 1988)

[72] H. Foelsche and E. T. Lessard to J. W. Glenn, "Specific Shield Requirements for the AGS Ring Upgrade," January 23, 1989

[73] K. Brown to J. W. Glenn, "Losses and Activation in the AGS," BNL Memorandum, December 8, 1988

[74] H. Foelsche and E. T. Lessard to J. W. Glenn, "Specific Shield Requirements for the AGS Ring Upgrade," January 23, 1989

functions[75,76,77] to estimate the on-site and off-site dose equivalent at large distances up to 1000 m. They assumed external exposure limits of 5-mrem/y offsite, and 25-mrem/y at uncontrolled buildings onsite as a basis for minimum thickness of AGS shielding.[78,79]

From current running modes for the AGS, the annual dose equivalent from direct radiation to workers in nearby buildings is less than 5 mrem per year. The estimated annual dose equivalent to the nearest person from skyshine is much less than 1 mrem. For uncontrolled areas where buildings may exist, the maximum fault-dose-rate within the nearest occupied building is less than 5 mrem in one hour. Actual doses as measured by TLD studies reveal that these estimates are very conservative, and that prior shielding analyses for the AGS were adequate.[80]

4.11.1. U-Line for AGS Experiments Shielding Analysis

Historically, the U-line has had two locations for high intensity, high-energy fixed-target experiments. The C-AD used the V-target station for the g-2 experiment. Neutrino experiments used a neutrino target and horn that existed in the U-line blockhouse, which is past the first dipole (WD1) that bends the beam towards the RHIC. Both blockhouses no longer accommodate high-intensity operations. The C-AD conducts such operations in the U-line only, with integrated intensities consistent with the RHIC's operations.

The C-AD infrequently undertakes low-intensity experiments in the U-line blockhouse; the RSC[81] reviews them on a case-by-case basis for radiation concerns. The section of U-line downstream of WD1 has a thin transverse shield. The C-AD RSC has not rated this section or the U beam-dump for full AGS intensities.[82] Soil activation adjacent to the tunnel wall limits the amount of beam interaction that can occur in this tunnel section. The C-AD produces activation during their low-intensity experiments with beam into the U beam-dump. The last portion of the U-line berm before the beam dump has a cap to prevent leaching of radionuclides.

4.11.2. AGS to RHIC (AtR) Transfer Line Shielding Analysis

The C-AD uses the AtR to transport protons and ions from the AGS to the RHIC. The C-AD operates the AtR to support the RHIC program with the allowed beam intensities intended for RHIC experiments. The C-AD accounted for additional beam-allowance for beam tuning and tests to the beam dump at the end of the W-line in their analysis of the RHIC Project. The past years of beam operations provided information on residual activity, external dose, soil activation, and beam losses. The intensity upgrade per ring desired by the RHIC will increase the AtR beam's intensity by a factor of 2.2.[83] The C-AD reviewed the RHIC Project's analysis, scaled it

---

[75] G. R. Stevenson, R. H. Thomas, "A Simple Procedure for the Estimation of Neutron Skyshine from Proton Accelerators", Health Phys. 46, 115-122 (1984)

[76] K. Tesch, "A Simple Estimation of the Lateral Shielding for Proton Accelerators in the Energy Range 50 to 1000 MeV", Radiation Protection Dosimetry 11, 165-172 (1985)

[77] K. Tesch, "Comments on the Transverse Shielding of Proton Accelerators", Health Phys. 44, 79-82 (1983)

[78] Report of the AGS Experimental Area Shielding Upgrade Committee, BNL-45892, August 1990

[79] AGS SAD, 1993

[80] P. Bergh, C-A ALARA Committee Meeting Minutes For The Review Of CY 2010 Dose Reports

[81] RSC Minutes of April 29, 2003

[82] RSC minutes of Dec. 29, 1999

[83] The AtR analysis assumed $2x10^9$ Au ions per bunch and the intensity upgrade corresponds $4.4x10^{11}$ per bunch

up for the upgraded RHIC intensity, and concluded there are no radiological concerns for exposures due to upgraded AtR operations.

Stevens calculated the prompt radiation dose in regions exterior to the berm over the AtR, assuming a beam intensity equivalent to $2x10^{11}$ protons per bunch, and 114 bunches delivered to each collider ring.[84] This is equal to the former ASE's intensity limit of $2.4x10^{13}$ protons per ring. The original design calculations for RHIC assumed twice the then-current regulatory value of the neutron-quality factor in anticipating a future change to the neutron-radiation-weighting factors first presented in ICRP 60.[85] The radiation-weighting factor replaced the quality factor in the 2007 version of 10 CFR 835. Although the neutron-equivalent dose is a strong function of the neutron energy, in no case is the value of the new neutron-weighting factor greater than twice the former quality factor. Thus, the C-AD retained their assumption of doubling the neutron-quality factor to estimate radiation doses from routine operations and beam faults at the upgraded RHIC intensity. The RSC will evaluate and approve any additional shielding, postings for radiological controls, and possible additional personal monitoring requirements before the C-AD implements the intensity upgrades. The C-AD lists their estimates of the higher fault doses for the increase in intensity in the following analyses.

Most regions of the AtR line experience very small beam loss at normal injection energy, i.e., about 0.05% of the injected beam at a single point such as a magnet, and 0.1% over the entire length of the line. A beam stop is located in the AtR line where the X and Y lines split from the W line; the C-AD assumes that the dump absorbs 100 times the beam lost in the rest of the line. The Big Bend Region is the X and Y injection arcs where the magnet elements are "dense." The other regions are upstream of the injection arcs where the magnet elements are "sparse." In the "dense" magnet regions, the generations of cascade interactions are spatially closer to each other, thus causing higher peak fluence closer to the original interaction compared to those in the "sparse" regions. The C-AD computed dose equivalent rates as 0.26-mrem/h (0.52-mrem/h intensity increase) from the Big Bend Region, and 0.15-mrem/h at other regions (0.33-mrem/h for the intensity increase). Table 4.11.2.a summarizes annual equivalent doses from each region with gold- and polarized proton-beam running.

Table 4.11.2.a Annual Equivalent Dose at RHIC Scaled for Intensity Upgrade

	Big Bend Region, mrem	Other Regions, mrem	Big Bend Intensity Upgrade, mrem	Other Regions Intensity Upgrade, mrem
Au	276	162	607	356
Protons	32	18	70	40
Total	308	180	677	396

Knowing the maximum loss over 10 seconds is important in determining the sensitivity of Chipmunk's response to the assumed routine losses. The least sensitive area would be "other regions". For this case, Au-beam is 1.43-mrem/h, and proton-beam is 3.12-mrem/h.

[84] A. J. Stevens, AD/RHIC/RD-83, Analysis of Radiation Levels Associated with Operation of the RHIC Transfer Line, December 1994

[85] ICRP Publication 60, 1990 Recommendations of the International Commission on Radiological Protection, Table 1.

Table 4.11.2.b summarizes the computed dose-rates on the berm over the AtR that the C-AD conservatively computed; fault studies show the actual doses are a factor of 2 or more lower. The C-AD examined two distinct, credible cases: (1) The loss of full beam at an arbitrary point fives time per year, which persists for two AGS pulses, and, (2) an order- of-magnitude higher loss than normal, 0.5% at a point, and 1% over the length of the AtR line for 5% of the collider fills in a year.

Table 4.11.2.b Fault Equivalent Dose Rates

	Big Bend Region	Other Regions	Big Bend Intensity Upgrade	Other Regions Intensity Upgrade
Two AGS pulses or 4.8×10^{12} 28 GeV protons lost at an arbitrary point 5 times/y	12.5 mrem/fault 63 mrem/y	7 mrem/fault 35 mrem/y	25 mrem/fault 123 mrem/y	14 mrem/fault 70 mrem/y
0.5% point loss for and 1% total loss for 5% of the fills each year	154 mrem/y	90 mrem/y	308 mrem/y	180 mrem/y
Total	217 mrem/y	125 mrem/y	217 mrem/y	431 mrem/y

Different regions of the berm over AtR have different postings and access controls. There is a locked fence from first portion of the ATR berm, from downstream of the V Target blockhouse to past the W beam-dump, near Thompson Road; the C-AD posts it as a Radiation Area, controlling access to this area by a C-AD OPM. The section of the berm over the X and Y arcs that encompasses Thompson Road is an Uncontrolled Area. Previously, the C-AD posted this area as a Controlled Area but the RSC's review recommended changing the area to an Uncontrolled Area.[86] The section of the X and Y arcs downstream of Thompson Road are inside areas that the C-AD posts as Controlled Areas. They contain the Big Bends discussed in the calculation above.

In a series of memoranda and reviews, the RSC documented changes to the posting and protection for AtR. Some approved changes removed unnecessary controls that caused downtime at the RHIC and potential risk to personnel.[87, 88, 89, 90, 91] That is, the RSC recommended removing three Chipmunks on the side of the soil shield within the locked fence; these radiation monitors had higher than normal failure-rates due to outdoor environmental conditions and their maintenance posed slip-and-fall risks to personnel to during winter. These hourly monitors were replaced by TLDs to provide monthly- or quarterly-integrated monitoring of doses at the fence on the berm's west side.

[86] Minutes of RSC Meeting of Feb. 3, 2009
[87] D. Beavis, "Proposed Changes for U/W Beam Line", Nov. 14, 2008
[88] D. Beavis, "Proposed Changes to the Radiation Protection of Thompson Road", Nov. 18, 2008
[89] D. Beavis, " Chipmunk Data for Thompson Road", Jan. 30, 2009
[90] Minutes of RSC Meeting of Nov. 18, 2008
[91] Minutes of RSC Meeting of Feb. 3, 2009

Seven TLDs monitor the dose along the AtR and near Thompson road; Table 4.11.2.c lists the background-subtracted dose registered for the CY10. The C-AD did not use an occupancy factor for evaluating this dose. The areas outside the AtR fence are uncontrolled; the RSC requested TLDs TK257-259 to monitor them. The C-AD de-posted Thompson Road to an uncontrolled area in Feb. 2010.[92] The four TLDs at the RHIC's X and Y arcs monitor the potential dose on this uncontrolled road. Calendar year 2010 experienced large losses in the AtR due to the transport of the low-energy Au beams to the RHIC. The largest residual activities measured in the AtR occurred after this run because of the beam losses during low-energy RHIC operations with 3.85 GeV per nucleon Au transfer to RHIC. Even under these conditions, the levels were less than 25-mrem/y for full-time occupancy at Thompson Road and the areas adjacent to the AtR.

Table 4.11.2.c AtR TLD Data from Run 10

Position	TLD number	Dose (mrem)
Upstream AtR	TK257	1
ATR near WD1	TK258	0
Outside UGE2	TK259	2
X-Arc south of road	TK292	4
X-Arc north road	TK200	4
Y-Arc south road	TK293	0
Y-Arc north road	TK199	12

The RSC reviewed issues related to Thompson Road for the increased beam-transfer intensities used for the RHIC upgrade.[93] RSC will decide before an increase if the road remains an uncontrolled area or a Controlled Area.

The C-AD protects thin-shielded areas near locations of AtR losses with interlocking Chipmunks. There are four over the injection arcs near Thompson Road. Chipmunks protect the exit labyrinths, where required, against unusual beam conditions.

The C-AD monitors losses in the AtR from the AGS to the W dump, and software looks for large differences in the beam-current transformers, sending an alarm to operators when the loss is too large. The C-AD's OPM instructs operators on how to respond to them. C-AD also monitors losses in the RHIC injection arcs and provides the responses to alarms for operators in the C-AD OPM.

The RHIC Project computed skyshine from losses in AtR to be less than 0.01 mrem per year to nearby buildings. The increase by a factor of 2.2 in beam for the RHIC's intensity upgrade is insignificant for nearby facilities. The closest structures previously evaluated were 1005S, which now is a Controlled Area, and the support building 1000P, which the C-AD posts as a Controlled Area. The dose at the site boundary is minuscule. Run 10 was the first long duration of low-energy gold transfers to RHIC. There are three dominant parameters increasing concerns when transferring low-energy ions from the AGS to the RHIC. Firstly, the physical size of the beam is larger and has less clearance in the apertures in the transport. The percentage of beam lost during such transfers rises with falling energy. Secondly, the lifetime of low-energy

[92] D. Beavis, " Thompson Road as an Uncontrolled Area", Feb. 17, 2010
[93] RSC minutes of June 14, 2011

beams declines with decreasing energy, and therefore, the C-AD fills RHIC more frequently. Finally, the stripping of the Au ions to fully stripped gold becomes less efficient with low energy causing losses in transport downstream of the stripping foil.

The low-energy gold Run 10 operations are a good illustration of the C-AD's approach to a new operating condition. First, a physicist familiar with beam transport and the operating requirements for the RHIC estimates the amounts of beam expected to be lost in the AtR.[94] These values serve in estimating potential dose and soil activation.[95,96,97] The RSC reviews these losses and expected radiological concerns and makes recommendations.[98,99] The C-AD established a series of procedures, soil monitoring, additional instrumentation, and surveys before allowing low-energy beam operations. Physicists developed a conservative schedule for beam operations and the C-AD collected and analyzed data, giving more flexibility as the run went on based on their evaluation of it.

The C-AD modified the curved labyrinth near the W beam-dump to decrease the leakage of neutrons out of it. Shield blocks now shadow the entrance of the labyrinth from the neutrons emitted from the beam dump.

C-AD covered the W beam-dump with a cap to prevent leaching from soil surrounding the beam dump. C-AD placed removable soil samples near the adjacent tunnel's wall to obtain an empirical measure of the activation products created in the soil.

The RCT's radiation surveys continue to demonstrate that residual activity in the transfer line is not an issue. They also imply that the beam losses are small along most of the transport line. The C-AD attempted to determine the losses with the current monitors along the transport.[100] They typically are about 2% of the total transported beam or less based on the current transformers, and most likely are close to zero due to the transformers inaccuracy. The C-AD uses these transformers to detect large beam losses and alarm operators to an unwanted operating condition.

4.12. Collider (RHIC) Shielding Analysis

The ability of the RHIC magnets to sustain their superconducting state in the presence of particle losses limits the beam's systematic losses. Particles leaving the beam pipe deposit energy in the form of a cascade of hadronic- and electromagnetic-particles that result in a significant temperature rise within a few meters from the loss point. A temperature rise of more than 0.5 K will destroy the superconducting state of the Nb-Ti wire, which the C-AD terms a "quench." Several hours may be required to cool the magnets back down to the required superconducting temperature, during which the experimental program stops. The approximate energy deposition needed to initiate a magnet quench is 4 mJ/g of superconductor, and can be achieved by as little as one part in 10^4 of the circulating beam. Because such a small amount of beam loss can greatly disrupt the experimental program, the collider effectively must be a loss-free facility. The C-AD directs small amounts of beam losses to specific locations to avoid losses elsewhere in the machine. These losses occur at the collimators, beam scrappers, and at a rapid acting (<1 ms)

[94] T. Satagota, "RHIC Low Energy Beam Loss Projections", Sept. 1, 2009
[95] D. Beavis, "Extending Routine Operations of RHIC and AtR to Low Energy", August 28, 2009
[96] D. Beavis, "AtR Low Energy Operations-Potential Dose", Updated Oct. 28, 2009
[97] D. Beavis, "Low Energy Operations of AtR-Potential Soil Activation", Updated Oct. 28, 2009
[98] RSC Minutes of Sept. 30, 2009
[99] RSC Minutes of Oct. 14, 2009
[100] V. Schoefer to D. Beavis private communication

beam-removal system that protects the magnets from the onset of beam loss by directing the beam into the beam dumps at the ring's 10 o'clock areas.

Several of the C-AD's systems protect the machine from damage; they are not Credited Controls, but limit the amount of beam lost in local locations. The beam-loss monitors detect ionization from beam losses, and, if they exceed a predetermined threshold, remove the beam permit for beam. The magnets also have quench-detection circuitry that removes the beam permit above a set threshold. The loss of a beam-permit activates the abort system that removes the beam from the machine by kicking it into the beam dumps. It is difficult to analyze the machine's history without the actions of these systems in place.

The beam-abort system removes the beam in a single turn by firing the abort kickers, sited about 25 m before the respective beam dump. There are a few bunches missing from the circulating beam's pattern, known as the abort gap; it allows the abort system to energize without kicking the beam into the machine's components. Each ring has a set of abort kickers and their associated beam dump. The C-AD designed the beam dump and soil shielding for a beam kicked into the beam dumps. The abort system is not a Credited Control, but plays an important role in removing beam from the machine and depositing it into the beam dumps. The long-term exposure analysis assumes that the abort system is working properly. The ACS for the RHIC specifies beam shutters to remove any beam should the abort system fail. In the last 11 years, the beam hit the shutters once when operations inadvertently masked the abort system before a beam store. The RHIC Project envisioned this type of event, and set up appropriate procedures to check the shutters after such an event.

The Collider beam's have a dump on either side of the 10 o'clock intersection region, and dumped beam accounts for about 85% of the total loss of the beam's energy. The RHIC Project's conservative analysis of loss at the dump demonstrated that the berm shielding at this location keeps the yearly dose at the nearest offsite location to less than 1 mrem/y.[101]

Subsequently, an independent analysis by Beavis considered a higher intensity and energy and demonstrated that any expected combination of increase in energy and intensity increase will not exceed the DOE's or BNL's dose limits at the site boundary or onsite.[102] A small area of the berm over each of the beam dumps is fenced and locked to control access for ALARA purposes to reduce potential on-site exposure.

Stevens examined beam loss on the primary and secondary collimators, located on either side of the 8 o'clock intersection region, to determine the potential dose rates from their usage.[103] Assuming that 20% of the beam in each ring interacts on the collimator and, at most, 10% of the stored beam in an hour, the resulting dose was less than 1 mrem/y at uncontrolled onsite locations and at the nearest offsite locations. Beavis and Nemesure examined the records of annual beam scrapped on the collimators for the last five years finding it was between 2% and 22% of the yearly estimates in the RHIC's analysis.[104] This reflects the conservative estimate of the number of full energy stores and the maximum intensity for each of them. An increase in energy and intensity will raise the skyshine dose only by a factor of 2.5, which is well below the DOE's requirements and less than 2.5 mrem per year. Beavis based this projected estimate on the very conservative number of fills (2345) to full energy and intensity, which the C-AD expects to

[101] Presentation to the Radiation Safety Committee on April 3, 1996 by A. J. Stevens in RSC files
[102] D. Beavis, " Skyshine Dose from the RHIC Beam Dumps", August 31, 2010
[103] A. J. Stevens, AD/RHIC/RD-113, Radiation Safety Considerations Near Collimators, April 1997
[104] D. Beavis and S. Nemesure, "Store Losses on the RHIC Primary Collimators", May 16, 2011

be lower. For upgraded running, the C-AD will enclose and lock an extended area of the berm at the collimators to control access for ALARA purposes.

Gollon analyzed all the multi-leg penetrations in the Collider and Stevens recalculated.[105] Gollon amended the re-calculated results to conform to the as-built conditions.[106] Beavis reanalyzed the personnel labyrinths for the low-energy gold run.[107] There was general agreement between the RHIC Project analysis and the new analysis. In several cases, Beavis used different assumptions. Both analyses demonstrated that 4 out of 18 of the labyrinths may exceed a dose of 100 mrem in a maximum credible incident with an energy and intensity upgrade. C-AD will add protections to these areas prior to upgraded running.

The RHIC Project estimated[108] the doses in an MCI near the ventilation shafts. For emergency ventilation ducts, the computed doses at the berm surfaces range from 46 -to 831-mrem. At the vent-fan covers, at least 1 m above the berm, the doses range from 27- to 475-mrem. Beavis scaled the RHIC estimates[109] for the upgrade energy and intensity for an MCI. The doses range from 68 mrem to 1200 mrem. The areas where the dose in an MCI is above 500 mrem are fenced to avoid access close to the vent. For upgraded running, the C-AD will post areas where personnel can receive 100- to 500-mrem in an MCI as a Controlled Area-TLD required. Beavis examined the ventilation shafts for possible chronic dose during low-energy gold operations; those areas with an excessive dose are within fenced and posted areas that the C-AD locks to prevent entry during Collider operations.

There are several straight-through penetrations into the Collider beam's enclosures. They comprise the cylindrical shafts used for survey, and the large rectangular shafts on either side of the 6-, 8-, 10-, and 12-o'clock experimental halls to permit cryogenic piping to bypass the experiments. These calculations[110] result in doses at penetration exits ranging from 12-rem for a large cryogenic pipe shaft, to 220-mrem for 30-cm cylindrical shaft. For a person standing besides the opening instead of directly over it, the dose is a factor of 10 lower. To prevent the possibility of causing these doses, C-AD excludes personnel from these shafts by a 2 m high fence and locked gates. Operators sweep fenced areas before allowing beam operations.

Dose from muons at the site boundary are small. The RHIC Project estimated that the muons from the blue beam dump[111] contribute a dose of 0.15- to 0.42-mrem/y; the upgrade in the beam's intensity raises them to 0.3- to 0.9-mrem/y. The RHIC Project estimated that the muon dose from the blue collimator[112] was between 0.13 and 0.7 mrem/y at the site boundary. The RHIC beam intensity upgrade would increase it to 0.3-1.5 mrem/y. The RHIC Project assessed the contributions from muons generated at the IRs to be at least a factor of 10 lower at the site boundary.

The change in the muon dose external to the shielding as a function of the beam's energy does not scale simply as does hadronic transverse radiation. The muon radiation external to the RHIC berm has been momentum-dispersed due to its flight path through the magnets. In

---

[105] RHIC SAD, Appendix 16, Shielding of Multi-Leg Penetrations into the Collider Tunnel, October 1999

[106] P. J. Gollon, AD/RHIC/RD-76A, Amendment to Shielding of Multi-Leg Penetrations into the RHIC Collider, July 1996

[107] D. Beavis, "RHIC Labyrinths", Jan. 14, 2010

[108] RHIC SAD Appendix 16

[109] D. Beavis, "Potential Dose near RHIC Emergency Ventilation Ducts", Dec. 18, 2009

[110] RHIC SAD, Appendix 19, Evaluations of Straight Through Penetrations, October 1999

[111] A. Stevens, AD/RHIC-46, Radiation from Muons from RHIC, 2/1/89

[112] The RHIC estimate has been scaled to account for the blue dump being located at 10' O'clock instead of 12 O'clock

addition, the path is complicated, and the C-AD needs information on the integrated energy loss of the muons. Beavis made an estimate[113] to determine the change of muon dose when proton energy increased from 250- to 300-GeV. The rise in proton energy could elevate the dose due to muons by a factor of 4: Beavis expects it to be smaller than a factor of 2. A factor of 4 corresponds to 3 mrem per year at the site's boundary from muons from the blue beam dump; this is lower than the DOE's regulatory limit of 100 mrem per year and lower than BNL's limit of 5 mrem per year per facility at the site boundary. The RSC reviewed[114] the muon estimates, recommending that the expected doses are sufficiently low that the C-AD can conduct commissioning at the higher energy while completing a more detailed analysis[115] or measuring the muon leakage. Due to the need for larger power supplies, the C-AD does not expect have the capability for higher energy for several years. The RSC will continue to review the commissioning work for a higher energy beam as capability develops.

The maximum credible dose to a person standing on the RHIC berm ranges from 85 mrem to 250 mrem for the upgrades.[116] Beavis scaled the dose from the RHIC Project for the energy increase, intensity increase, and a 1 m distance to waist height; the estimated dose to a person on Renaissance Road over the ring is 140 mrem in an MCI. For the past 10 years, this area of the berm was an Uncontrolled Area. Anticipating the upgrades, during Run 11, the C-AD posted Renaissance Road over the RHIC berm as a Controlled Area. The road crosses the ring in the middle of the sector, which is an unlikely location for an MCI. The C-AD monitors the area with a Chipmunk and a TLD. The TLD dose always has been consistent with zero doses above background.

The C-AD employs TLDs to monitor the entire C-AD facility including the RHIC Ring. They [117] confirm that dose estimates are conservative, and that posting the entire RHIC facility as a Controlled Area is adequate for present intensities. The C-AD does not expect yearly doses from chronic losses to be an issue for increases in intensity and energy. The primary issue for leaving the RHIC's berm as a Controlled Area is the dose in a maximum credible incident.

The C-AD will upgrade weak locations near penetrations and IRs reviewed by the RSC[118] as detailed below before implementing the energy and intensity upgrade:

- Use the same maximum beam fault assumptions (in %) as was done in the RHIC Project analysis. If justified, use other assumptions for specific locations
- Lock and post all accessible areas that potentially could exceed 500 mrem. Allow access only by procedure
- Write an Enhanced Work Plan for the RHIC, and train the personnel. Areas that can exceed 100 mrem in a fault require personnel to wear a TLD
- Design the areas near experimental IRs not to exceed 100 mrem in a beam fault for personnel at ground level. Establish controls for elevated regions in these areas in which the potential for exposure could exceed 100 mrem in a full beam fault. If done, then personnel working at ground level do not require TLDs. The RSC may allow exceptions for areas

[113] D. Beavis, "Scaling Muon Doses from 250 GeV to 300 GeV", May 26, 2011
[114] Minutes of RSC meeting of June 14, 2011
[115] K. Yip is presently working on a detailed Monte Carlo analysis of the muon leakage
[116] D. Beavis Memorandum, "Potential Dose on the RHIC Berm", Dec. 30, 2009
[117] P. Bergh, " CAD Area Monitoring 2010", March 31, 2011
[118] RSC Minutes of August 25, 2009. The 1000 mrem discussed in the minutes has been replaced with 500 mrem

where there is occasional access. Place monitor-TLDs in these areas to register any dose in a beam fault

- Due to occupancy by other BNL groups, review 1005 as a non C-AD building

The caps over the RHIC's collimators and beam dumps prevent rainwater from leaching radionuclides from the soil and transport to the groundwater. The collimator and dumps have removable soil samples to monitor the amount of potential activation of the soil. The injection area also has removable soil samples to monitor the potential soil-activation by injection losses. The monitoring results[119] indicate that the produced Na-22 and tritium in the soil is below the limits that require soil caps.

The C-AD monitors with Chipmunks weak locations typically near occupied areas.[120] C-AD does not interlock detectors because radiation-generated interlocks do not prevent an MCI from occurring. However, the C-AD records the equivalent dose rate and MCR alarms signal operators if a dose rate exceeds the established threshold.

The RCTs monitor residual radioactivity and dose rates in the RHIC Ring just after shutdown. The areas near the beam dumps and collimators have dose rates well within the expectations of the RHIC Project. There has been no contamination from the beam dumps or collimators.

4.13. ERL Shielding Analysis

When the machine is operating at the ERL, a 3.5 to 25 MeV primary electron beam is present. Before interacting at a particular location, the accelerated beam is essentially mono-energetic, consisting of only electrons. If the electrons stop in the accelerator equipment, beam stop, or shielding, then electromagnetic cascades and Bremsstrahlung radiation can occur. For low-energy electrons, 25 MeV or less, the so-called Bremsstrahlung radiation (braking radiation) contributes substantially to energy loss. A decelerating electron or one changing direction emits Bremsstrahlung radiation. The term describes photon radiation emitted by the electrons' decelerations when they pass through the electric field of atomic nuclei. The energy of photon radiation distributes over a wide spectrum of energies up to, and including, the energy of the electron.

Accelerating electrons in a magnetic field also produces photons, termed synchrotron radiation. Synchrotron radiation from the ERL results when the electron beam circulates in the magnetic field of the accelerator ring. This synchrotron radiation has low energy and attenuates in the shielding used for Bremsstrahlung radiation.

When the ERL is operating, ionizing radiation, such as photons and neutrons that penetrate the shielding, dominate the radiation field in occupied areas. Bremsstrahlung photons that interact with the nuclei in the concrete shield produce neutrons. Because the ERL has lower-energy Bremsstrahlung photons, at least in terms of causing nuclear reactions, the dominant neutron-producing mechanism is giant nuclear resonance. Among the best-known example is giant electric dipole (E1) resonance, concentrated in the energy region of 10- to 30-MeV for most nuclei, if not all.[121]

The neutron spectrum from the E1 resonance process is comparable to a fission spectrum, and a Maxwellian distribution of energy suffices for calculating radiation shielding. Shielding is

[119] M. Van Essendelft to D. Beavis. See RSC memos, "Soil Sample Results 2010", April 4, 2011
[120] There are presently 15 chipmunks around the external shield of RHIC
[121] Giant Nuclear Resonance, January 2008

relatively straightforward. The neutron-dose-equivalent tenth-value-layer for ordinary- and heavy-concrete is about 100 g cm^{-2} for this neutron spectrum.[122]

Neutrons can induce radioactivity in the ERL machine's components, cooling water, and nearby equipment. The C-AD expects this neutron activation to be insignificant because the electron energies into the beam dump are well below most neutron-production thresholds. The C-AD RCTs will verify residual radioactivity via radiation surveys near the beam dump when the machine de-energizes, and by sampling and analyzing the cooling water. Radiation controls are in place as required during entry into the ERL following shutdown of the machine for inspection, maintenance, modification, or repair. Because of the insignificant activation at ERL, the C-AD does not expect contamination issues.

The principal radiation hazards at Prototype ERL derive from the flux of the primary electron beam and the machine's duty-cycle. Listed in order of relative importance to health, these hazards include the following ones:

- Potential inadvertent exposure of workers to the primary electron beam or to RF-induced x-rays from the electron gun or 5-cell accelerating cavities. The access controls system and the enclosed beam pipe prevent the exposure of personnel to this beam. The probability of unsafe failure of the access controls system that would allow an overexposure from primary beam or Bremsstrahlung is so low[123] that C-AD does not consider this hazard credible
- Exposure to photon- and neutron- radiation near labyrinths and penetrations
- Exposure to photon- and neutron-radiation that penetrates through the shielding
- Exposure to skyshine radiation; skyshine radiation may extend many tens of meters from this accelerator. The Prototype ERL roof shields are inaccessible during operations via administrative access controls. The concerns here are the dose rates from skyshine in the Prototype ERL Control Room, B966, and B940 due to the expected occupancy of these areas compared to other areas surrounding the ERL. However, the C-AD expects this source will be insignificant during routine beam operations. The C-AD's RCTs will confirm this by undertaking routine radiation surveys, and by placing TLDs around the facility
- Exposure to activated air
- Exposure to potential residual radiation induced in the ERL's components
- Exposure to, or inadvertent release of activated cooling water to the environment

The ERL is an experimental machine that may undergo changes in operations as the C-AD learns more about its operating characteristics. If any of these changes involve a potential change in the radiation hazards, then appropriate work planning and C-AD RSC reviews will take place to ensure that the C-AD meets the requirements of BNL's Radiological Control Manual and satisfies the ASE limits. If C-AD must revise the limits to allow more flexibility in research/operations, the C-AD will submit the proposed ASE changes to the DOE for approval before making the changes.

Table 4.13.a lists the key parameters for calculating dose rate for the ERL. The C-AD provides estimates of the expected dose rates from Prototype ERL operations in Table 4.13.b; C-AD expects the actual dose rate to be less than the computed ones. During commissioning, the RCTs will conduct radiation surveys to validate these estimates. If necessary, the C-AD will

[122] NCRP 144, Radiation Protection for Particle Accelerator Facilities, December 2003

[123] D. Beavis, Failures in the PLC Based Radiation Safety Systems, October 31, 2000; D. Beavis, Frequency of Interlock Testing, November 6, 2000; D. Beavis, Estimation of Time to Loss of Protection-The D-Downstream Gate, November 13, 2000

modify the shielding to ensure that routine and faulted doses, and dose rates are acceptable for full power operation of the Prototype ERL.

Table 4.13.a Parameters of the Prototype ERL in Building 912

	High- Charge Mode	Low- Charge Mode
Injection energy, MeV	3.5	3.5
Maximum beam energy, MeV	25	25
Average beam current, mA	100-200	10-200
Bunch rep-rate, MHz	9.4	9.4-700
Charge per bunch, nC	10 or more	~0.3 -1
Efficiency of current recovery	>99.95%	>99.95%

For shield calculations, the C-AD established the following limitations for the Prototype ERL. C-AD rated power sources for Prototype ERL, 1 MW for the gun and 50 kW for the 5-cell cavity, 20% greater to estimate dose and dose rates. Prototype ERL power sources do not produce this increased power; rather, the C-AD included a safety margin of 1.2 in calculating the dose and dose rate:

- Electron energy limit of 3.5 MeV for the superconducting RF gun
- The power source of the superconducting gun is limited to delivering 1.2 MW of power to the gun
- Electron energy limit of 25 MeV for the ERL ring
- Electron beam power shall not exceed the equivalent of 10 MW of instantaneous power for the electron beam in the Prototype ERL ring
- The power source for the five-cell cavity will be limited to delivering a maximum of 60 kW of power to the cavity
- A beam power of 1.2 MW for the electron beam striking the beam dump

Continuous beam loss in the electron ring is limited via the physics of the Prototype ERL; it vanishes since the ERL does not recover energy to accelerate the next pulse in the train of pulses coming from the electron gun. This self-limiting effect is one peculiarities of an ERL ring. The ERL limits the maximum continuous beam loss to 50 kW, the power restored by the 5-cell cavity power supply.

It is not expected that the entire 3.5 MeV beam at average current on its way to the dump can be lost at any single point for more than a few seconds since machine damage would occur. For radiation protection, the C-AD assumes that the ERL's electron beams produce thick-target Bremsstrahlung in high-Z material, regardless of the target's actual thickness or type. Thick target curves for Bremsstrahlung radiation from NCRP 144 show the 3.5 MeV beam has insufficient energy to create a neutron-dose contribution via the photon-giant-nuclear-resonance process. [124]

The C-AD anticipates routine loss of a small fraction of the 3.5 MeV beam. In normal operations, the collimator's losses dominate the 3.5 MeV beam loss, routinely about 1 micro-amp of beam. One micro-amp continuous 3.5 MeV beam loss translates into a beam power of 0.0035 kW. The collimator is located in the transport between the gun and the first chicane.

[124] NCRP Report No. 144, Radiation Protection for Particle Accelerator Facilities, Figure 3.5

The 3.5 MeV beam is not intended to be transported into the 25 MeV transport ring after the first bend after the superconducting RF cavity. For radiation-safety purposes, interlocks prevent its transport past this magnet.

The electron gun's beam power eventually transports to the beam dump. From Table 4.13.a, the average beam current is 200 milliamps; with of continuous 3.5 MeV beam loss on the dump, this represents a beam power of 700 kW.

The high-energy electron beam, 25 MeV, separates from the low energy 3.5 MeV beam in the chicanes before and after the SRF cavity. A 60 kW maximum sustainable loss is the limit of the SRF's power supply. Since this energy Bremsstrahlung produces giant resonance neutrons, the 25 MeV beam generates the highest neutron yield.

Swanson[125] illustrates the broad features of the radiation field due to the unshielded initial interactions of electrons, showing that Bremsstrahlung radiation dominates the dose. His figure is useful for making crude estimates of the resultant neutron-radiation field. For a 60 kW continuous loss of a 25 MeV electron beam, the neutron-dose equivalents are several orders-of-magnitude less than the dose equivalent from Bremsstrahlung radiation.[126]

Beam-current transformers used in a differential-mode limit beam loss in the ERL ring to protect the machine. The C-AD anticipates this as being a low-loss mode; high loss would cause major equipment damage, quickly terminating the accelerator's operation. However, C-AD does not credit the ERL machine-protection system in reducing dose from a beam-loss event.

The ERL enclosure has side walls composed of between four- and eight-feet of light concrete. The thin sections of wall are shadowed from the potential sources with inner shield walls located appropriately. The entire facility has a single layer of light concrete roof beams four feet thick, except for a transition region where the roof is two layers of beams. This transition region is where the 4.3 m ceiling height in the center falls to 3 m feet at both ends.

The maximum sustained beam loss is 1.2 MW for 3.5 MeV injection electrons and 60 kW for electrons in the 25 MeV ring. The C-AD expects credible routine losses to be 1 W at beam injection and 50 W for the 25 MeV beam. The presence of additional heavy concrete or iron shielding for the electron ring in the cave reduces the Bremsstrahlung dose-rate in the forward direction. This added shielding lowers the 0-degree Bremsstrahlung dose-rates by a factor of at least 0.005. Including this added shielding, the C-AD lists estimates of dose rates at the outside surface of the Prototype ERL's shielding in Table 4.13.b.[127,128, 129]

---

[125] W. P. Swanson, Radiological Safety Aspects Of The Operation Of Electron Linear Accelerators, Technical Report No. 188, International Atomic Energy Agency (IAEA), Vienna, 1979. Adapted in Radiation Physics For Personnel And Environmental Protection, Fermilab Report Tm-1834, Revision 7, April 2004, J. Donald Cossairt, Fermi National Accelerator Laboratory

[126] D. Beavis, Simple Estimate of ERL Radiation, August 1, 2006

[127] Ibid.

[128] D. Beavis, The Effectiveness of a Two-Foot Thick Inner Heavy Concrete Wall, December 11, 2006

[129] Prototype ERL USI, 2008

Table 4.13.b Dose Outside Prototype ERL Enclosure for 3.5- and 25-MeV Electrons

Condition	Instantaneous Dose Rate From Maximum Beam Loss[a]	Dose Rate From Sustainable Loss[b]	Dose From Sustainable Loss Assuming Interlock Occurs[d]
3.5MeV@ 0 degrees, γ	88,000 mrad/h	0.073 mrad/h	0.0002 mrad
3.5MeV@ 90 degrees, γ	18,000 mrad/h	0.015 mrad/h	0.00004 mrad
25 MeV@ 0 degrees, γ	65,000 mrad/h[c]	4000 mrad/h[c]	10 mrad[c]
25 MeV @ 90 degrees, γ	13,000 mrad/h	800 mrad/h	2.0 mrad
25 MeV neutrons	120 mrem/h	6.0 mrem/h	0.015 mrem

[a] The maximum instantaneous beam loss is 1.2 MW at 3.5 MeV, and 10 MW at 25 MeV, which would terminate after a small fraction of a second.
[b] The sustainable loss is 1 W for 3.5 MeV, and 60 kW for 25 MeV electrons is assumed.
[c] The forward-direction gamma-dose rates were reduced by a factor of 0.005 by the adding 2-feet of heavy concrete in the electron ring.
[d] As with all C-AD interlocking area-dose-rate monitors, a 9-second delay from sensing the trip point's dose rate to stopping of beam is conservatively assumed in SAD analyses.

The electron gun and the 5-cell accelerating cavity will generate x-rays from field emission of wall-surface electrons with dose rates similar to those in the RHIC's RF cavities. Comparing this source to the routine electron-beam loss shows that the x-ray dose rates at the outside surface of the Prototype ERL cave shielding are insignificant relative to Bremsstrahlung.

The C-AD used the Monte Carlo Neutron Photon Transport Computer Code (MCNPX) to estimate the dose rates from skyshine in normally occupied areas during ERL operations. Table 4.13.c lists the results for an assumed maximum sustainable loss of 60 kW and for a more realistic but conservative loss of 50 W, assuming that the Chipmunks interlock the beam at the RSC's determined set point. The Prototype ERL expects to run only about 25% of a year. Using this occupancy with the expected sustainable loss of 50 W, there is an annual dose of about 40 mrem to an individual in the ERL control room.

Table 4.13.c Skyshine Dose-Rate Estimates From 25 MeV Beam Loss[130]

Occupied Location	Maximum sustainable loss (60 kW of 25 MeV electron beam)	Conservative sustainable loss (50 W of 25 MeV electron beam)	Maximum dose with 60 kW loss assuming Chipmunk Trips Beam
ERL Control Room	98 mrem/h	0.082 mrem/h	0.25 mrem
Building 966	26 mrem/h	0.022 mrem/h	0.07 mrem
Building 940	4.0 mrem/h	0.0033 mrem/h	0.01 mrem

The C-AD based the Klystron room shielding on the operation of a similar Klystron at Los Alamos with a 1/8 inch lead "garage" over it. The ERL Klystron operates at an upper voltage of ~92 kV. For 150 kV, the 1/8 inch of lead is equivalent to 1.6 inches of steel.[131] Based on this computation, and radiation measurements made at the manufacturer's facility, the C-AD designed the Klystron room equivalent to a box with a wall thickness of 2 inches of steel. There are penetrations in the back wall for utilities and the wave-guide; C-AD shielded them with steel and lead to prevent x-rays from directly shining out.

Dose estimates for the penetrations, which are order-of-magnitude ones, combine simple source terms and estimates of the attenuation of the radiation as it propagates through the opening.[132] The C-AD uses conservative assumptions so that the estimates represent upper limits for potential dose rates. The ERL's low-intensity fault studies for the RF-gun, five-cell cavity, and transport of the low- energy and high-energy electron beams will verify the source terms, and radiation transport through the shielding and penetrations.

There are approximately 20 penetrations through the Prototype ERL's external shielding, two allowing access of personnel and equipment. Several penetrations are buss blocks containing several dozen small penetrations for access of utilities. Others are for electrical cables, cryogens, gas exhaust, laser beam, and the like.

Dose rates during fault conditions typically are many orders-of-magnitude larger than that under normal operating conditions. ERL workers do not occupy the areas around the penetrations and RCTs posts penetrations for localized elevated dose-rates. The safety analyses for penetrations focus on dose to personnel during a faulted beam, as opposed to dose from normal operations.

RCTs post all areas near the Prototype ERL shielding at least as a Radiation Area during operations. Chipmunk radiation monitors detect large dose rates at penetrations caused by fault conditions. The Chipmunks couple with the interlock system and terminate the radiation in 1- to 9-seconds depending on the level of radiation at the detector. The C-AD assumed a delay of 9 seconds for estimating the dose from fault conditions.

The four sources of radiation in the area are the injector, beam losses of the 3.5 MeV electron-beam, the five-cell cavity, and beam losses of the 25 MeV electron beam. The source terms used are conservative.

[130] Email from K. Yip to R. Karol dated January 29, 2008, Skyshine
[131] NBS Handbook 50
[132] D. Beavis, Dose Rate Estimates for ERL Penetrations, March 26, 2008

The injector and the five-cell cavity can generate copious x-rays. The C-AD did not model them in terms of their x-ray generation, but used experience from other similar systems at the C-AD. The conditioning of these RF cavities will cause the largest generation of x-rays. The C-AD expects the superconducting five-cell cavity to absorb 100- to 1000-watts from field-emission electrons crashing into the walls of the cavity before boiling off too much helium and forcing the superconducting cavity to a higher temperature, which eliminates the accelerating RF field. The C-AD expects the voltage difference that the field-emission electrons cross to be not more than the gradient of a single cavity, 5 MV. Only a few electrons accelerate across several cavities. The C-AD assumed that all the electrons are at 3.5 MeV with a maximum conditioning loss of 250 W, and assumed the routine loss to be less than 10 W for the five-cell cavities. The C-AD assumed the injector has this same characteristic. C-AD used previous methods[133] to estimate the 90-degree radiation, using thick-target formulas. The assessed unshielded dose rates during conditioning are 2000-rem/h at 1 m and, for normal operations, 80-rem/h at 1 m. The C-AD concludes the shielding used to protect against Bremsstrahlung radiation from electron beam losses in the ERL Ring is adequate also to protect against the x-ray source.

The C-AD estimated the absorbed dose from full 25 MeV electron beam loss in the near-zero degree direction to be 10,800 rad/h at 3 m with 0.7 m of heavy concrete between the source and the point of interest with a 60 kW loss.[134] They used this value in determining locations where an inner shield wall acts as a shadow for the 25 MeV beam losses in the ring.

The maximum sustainable 25 MeV beam loss that the 5-cell cavity can support is 60 kW. According to the machine's designers, the realistic maximum local loss is between 10- and 100-W before beam loss damages the machine and accelerator shuts down. The ERL has machine-protection devices to limit losses to avoid damaging equipment. Thus, C-AD assumes the 60 kW loss is conservative, and expects routine losses of 25 MeV electron beam to be less than 10 W.

The 3.5 MeV beam has a power limit of 1.2 MW that normally is deposited in the water-cooled, locally shielded beam dump. Again, the C-AD does not expect the machine to survive a large beam loss at any location, except at the beam dump. The C-AD heavily shielded beam dump internally in the ERL enclosure, and does not consider radiation from the dump in the penetration evaluations.

An arbitrary 1 kW of a 3.5 MeV electron beam was assumed for the penetration analysis. The C-AD expects a routine loss of 10 W or less. The RSC will review any routine loss higher than this, based on daily radiation surveys, and will indicate the need for additional shielding.

The following table (Table 4.13.d) summarizes the calculations for each penetration for gamma rays and neutrons. The maximum neutrons can come from a different source location than the gamma rays. In all cases, the maximum gamma dose rates are from the 25 MeV electron-beam losses.

[133] D. Beavis, "Simple Estimates of ERL Radiation", August 9, 2008
[134] D. Beavis, "The Effectiveness of a Two-Foot Thick Inner Concrete Wall", December 11, 2006, Fig.1

Table 4.13.d Estimated Maximum Dose Rates and Fault Dose to Worker Near Penetrations

Penetration	Maximum Gamma Dose Rate (rem/h)	Maximum Neutron Dose Rate (rem/h)	Maximum Dose with Interlock (mrem)[8]
Laser port	2.5	0.024	6.3
1 MW Waveguide	50	0.48	130
Cryo Ports (5)	10 [1]	2.4 [1]	31
North Gate	0.31	2.2	6.3
North Labyrinth Buss Block	4.8 [2]	0.12	12
South Gate	59 [3]	0.19	150
Port in South Labyrinth (2)	72 [4]	0.72	180
West Trench	7.2	0.12	18
East Trench	2.4	1.9	11
South labyrinth buss block	0.12	0.36	1.2
ODH Vent	12 [5]	4.8 [5]	4.2
Lifting Fixture holes (4)	1.7 [6]	0.010 [6]	4.3
50 kW waveguide	34 [7]	1.2 [7]	88

[1] C-AD assumes that steel attenuates the gamma ray dose by a factor of 10.
[2] This is directly outside the buss block, and may be in a fenced area.
[3] A shield block in the ring center would substantially reduce this dose rate.
[4] This is at the port exit, which may be located in a fenced area. The C-AD may pack the port in the future. This value is for the port with the highest dose rate of the two.
[5] This is on the roof, and C-AD does not allow access during operations.
[6] The C-AD evaluated at the edge of the shielding and not on the roof.
[7] The penetrations for the cable ports, water pipes, and the 50 kW waveguide are in a separate note.[135] The dose rates presented here are at 4 m above the floor.
[8] C-AD uses barriers to prevent access to penetrations greater than 20-mrem fault dose. The C-AD will add shielding and barriers based on fault studies to reduce the fault dose below 20 mrem.

All the dose rates in the Table 4.13.d are sufficiently low such that with appropriately placed Chipmunk monitors to terminate the beam on large beam losses, the exposure to personnel is less than 10 mrem from a fault. Where the instantaneous fault dose rate exceeds 50-rem/h at a penetration opening, C-AD installs dual failsafe Chipmunks. Fault studies by the RSC will evaluate the need for added shielding at ERL.

Toxic gasses produced by ionizing radiation inside the ERL enclosure shows that ozone is among the most toxic, and quantities that exceed the ACGIH Threshold Limit Value (TLV) level of 0.1 ppm are possible. The TLV is the maximum allowed concentration for workers exposed 8 hours per day, 5 days a week. C-AD expects local concentrations of ozone at the location of the highest Bremsstrahlung radiation doses to air. No locations exist in the ERL where electrons traverse air; the C-AD only considers the radiation energy imparted by the Bremsstrahlung in the analysis. The C-AD used the model for ozone production in Swanson's paper.[136]

[135] D. Beavis, "Estimate of the Radiation Exiting Penetrations for the ERL 50 kW Waveguide, Cable Buss Block, and Water Pipes", Dec. 6, 2006

[136] W. P. Swanson, Toxic Gas Production at Electron Linear Accelerators, SLAC-PUB-2470, February 1980

The highest power level in the Prototype ERL is the energy deposited in the beam dump, viz., 1.2 MW of 3.5 MeV electrons. For an uncollimated Bremsstrahlung beam from an optimum high-Z target, the production rate of ozone, P in liters per minute, is

$$P = 1.7\text{x}10^{-4}\ L\Omega$$

Where
L = meters of air
Ω = kW of electron beam power, 1200 kW for the beam dump

Enclosing the beam dump is a 0.3 m lead shield with, at most, ~0.15 m of air that the Bremsstrahlung beam passes through before encountering shielding. The actual air passage is much less. Using these conservative assumptions yields an ozone-production rate of 0.03 L/m.

As indicated by Swanson, the mean life of ozone in air at room temperature, T, is 50 minutes for a radiation environment. The C-AD ignores any natural ventilation in the ERL enclosure. The calculated saturated concentration of ozone, C_{sat}, is

$$C_{sat} = PT/V$$

The 0.15 m air size around the dump is about a 200 L volume since the dump is 1.5 m long x 0.45 m in diameter. C_{sat} for that air-gap between the dump and lead shield is $7.5\text{x}10^3$ ppm. Assuming the air in the gap exchanges with cave air (V of 570,000 L), then saturation concentration lowers to 3 ppm, well above the TLV limit.

Based upon this calculation, the C-AD will enclose the beam dump in a tight structure maintained free of air using an inert gas such as helium; alternatively, C-AD will vent the air space between the dump and the lead shield to outside the cave into Building 912 where the ozone can significantly dilute to safe levels. The C-AD will make ozone measurements during ERL commissioning to determine the actual magnitude of the ozone problem, and to optimize a solution.

The credible sustainable losses of the electron beam are 1 W for the 3.5 MeV electrons, and 50 W for the 25 MeV electrons. The length of air until the uncollimated Bremsstrahlung beam reaches shielding is no greater than 4 meters. Assuming that the ozone produced by these losses continuous, and reaches saturation in the ERL cave, then the ozone concentration is 0.0003 ppm for the 3.5 MeV beam loss and 0.01 ppm for the 25 MeV beam loss. Thus, there are no unsafe ozone hazards from routine electron-beam losses.

4.14. Induced Residual Activity

The radionuclide content of induced residual activity is similar at all C-AD accelerators and experiments, but differences in the beams' intensities and durations create differences in the level of residual radioactivity in any specific component. The radionuclides produced are proton rich due to neutrons evaporating off excited nuclei following high-energy ion-nucleus and particle-nucleus interactions, or following pn, p2n, pD and pT reactions. High-intensity high-energy proton beams at the Linac, BLIP and AGS produce the maximum levels of induced radioactivity.

Losses from high-energy particles (>20 MeV) and lower energy deuterons can initiate nuclear reactions in beam pipes, magnets, extraction septa, shielding, RF devices, targets, dumps, beam scrapers, vacuum- sectionalizing valves, and the like. These interactions produce secondary particles, such as neutrons, protons, and pions. At each interaction point, the nuclei of atoms struck by the high-energy primary or secondary particles fragment, generating a range of lower mass nuclei, some of which are radioactive.

The materials used in constructing the C-AD accelerator and accelerator's experimental facilities are limited in number, the most important being iron, steel, copper, aluminum, concrete, oil, and plastic. Generally, the C-AD does not use metals and materials in their pure form; that is, they have welds, or they are alloys, or they are parts of beam-line components. Thus, irradiation produces a variety of radionuclides in any given item. Because they are proton rich, these radionuclides are above or on the element stability line. They predominantly decay by the positron and electron capture decay modes, which is different from the decay modes for radioactive materials produced in a nuclear reactor. This difference makes accelerator activation products easily distinguishable from reactor produced radioactive materials. Based on studies on the AGS radioactive waste stream, accelerator beam losses in these materials induce radionuclides ranging in half-lives of a few seconds to tens of years. See Table 4.14.a for the list of radionuclides in the accelerators that have half-lives longer than a few hours.

Table 4.14.a Summary of the AGS Radionuclide Production

Predominate Irradiated Material	Nuclide
Plastic, Oil	^{7}Be, ^{22}Na, ^{46}Sc, ^{54}Mn, ^{57}Co, ^{60}Co, ^{68}Ga, ^{88}Zr, ^{113}Sn, ^{124}Sb, ^{125}Sb, ^{133}Ba, ^{134}Cs, ^{207}Bi
Concrete	^{7}Be, ^{22}Na, ^{46}Sc, ^{54}Mn, ^{57}Co,^{58}Co, ^{60}Co, ^{65}Zn, ^{110}Ag, ^{134}Cs
Aluminum	^{7}Be, ^{22}Na, ^{54}Mn, ^{57}Co,^{58}Co, ^{60}Co, ^{65}Zn, ^{68}Ga, ^{95}Nb, ^{110}Ag, ^{33}Ba, ^{134}Cs
Iron, Steel	^{7}Be, ^{22}Na, ^{46}Sc, ^{54}Mn, ^{59}Fe, ^{56}Co, ^{57}Co, ^{60}Co,^{65}Zn, ^{68}Ga, ^{75}Se, ^{95}Nb,
Copper	^{7}Be, ^{22}Na, ^{54}Mn, ^{57}Co,^{58}Co, ^{60}Co, ^{65}Zn, ^{68}Ga, ^{110}Ag, ^{133}Ba, ^{134}Cs

A study of beam loss and activation at the AGS during high-intensity running provided a prescription to predict activation and the resultant exposure rate at particular locations in the AGS Ring.[137] In 1990, the residual exposure rate varied around the AGS Ring from values of 5 mR/h to 5 R/h. These levels no longer exist due to radioactive decay, and the replacement of equipment. The study indicated that the exposure rate falls off according to the following relationship:

$$X = 4.1\text{x}10^{-14}\ E^{1.2}\ P\ \ln(1 + T/\tau)$$

Where
X = exposure rate at 30 cm, mR/h
E = proton energy, GeV
P = proton loss rate, p/h
T = irradiation time, h

[137] K. Brown, "Beam Loss and Induced Activation in the AGS," Accelerator Division Technical Note 337 (April 9, 1990)

τ = cool down time, h

The last significant high-intensity run in AGS was in 2002. Table 4.14.b shows the residual 2011 levels from that run based on the decay equation from the 1990 study. The C-AD completed other low-intensity runs between 2002 and 2011, and the C-AD's RCTs mapped the exposure rate in the AGS Ring after each of them. These other runs did not have a large impact on the residual dose rate. If work planning for a job in the AGS Ring shows that the expected accumulated dose exceeds the C-AD's administrative limit, then the C-AD's ALARA Committee reviews the work to see if further actions can lower worker doses before the work can begin. This process has served the C-AD well over the last 20 years in lowering the total doses to workers to a fraction of those received in the past.

Table 4.14.b Locations of High-Intensity Beam Loss in the AGS, and Activation Levels (R/h)

Main Loss Locations in AGS Ring	Exposure Rate at 30 cm After 1 Day Cool down (2002)	Exposure Rate at 30 cm After 1 Month Cool down (2002)	Exposure Rate at 30 cm After 9 Year Cool down (2011)
Injection Region (L20)	5.8	2.1	0.04
Dump/Scraper Region (J10)	62	22	0.46

A beam dump/scraper about 2 m long at J10 catches 80 to 90% of the beam loss that occurs during acceleration and extraction. The remaining loss spreads over 7 to 8 magnets downstream. The L20 septum magnet catches most of the injection losses. In addition to absorbing the acceleration and extraction losses, the dump/scraper affords a place to deposit beams not injected into the experimental areas, such as during AGS studies.

To reduce levels near the J10's dump/scraper, the C-AD placed a shield around the dump that also lowers soil activation outside the tunnel. To eliminate the exposure-rate hazard from residual radiation levels in the dump and shield, the C-AD adds a temporary rolling shield during shutdown to help eliminate this source of radiation exposure to nearby workers.

The C-AD's "as low as reasonably achievable strategy" since 1973 has been as follows:

- Schedule maintenance for longest cool down time
- Better the reliability of vacuum system
- Improve the reliability of beam line components
- Keep a history of the equipment's malfunctions
- Improve methods of injection, acceleration, and extraction
- Modify shielding near the trenches, columns, and penetrations
- Install quick disconnects on vacuum systems and magnets, water pipes, and power cables
- Develop radiation-hardened equipment
- Use closely coupled shielding to reduce secondary radiation near targets
- Establish guidelines for area access, based on radiation level
- Train staff on mock-up equipment
- Design shielding blocks for quick removal and re-insertion
- Use remote areas for storing hot equipment
- Compile and assess personnel-exposure data

- Institute system for radiation-work permits
- Employ complete magnet assemblies for quick replacement
- Simplify target alignment and storage
- Use self-aligning magnet stands to simplify surveying
- Lower density of beam-line components to reduce serviceability problems
- Use remote test points to trouble-shoot magnets
- Increase the number of radiation-monitoring points
- Assure computer integration of radiation monitoring system

During the current heavy-ion and low- intensity polarized proton running periods, activation is at least an order-of-magnitude lower than during the historical high-intensity proton periods.

Thomas Jefferson National Laboratory reports that they create 10.1-day Nb-92m in niobium accelerating cavities following the interaction of field emission electrons that have energy greater than 6 to 7 MeV. Thus, activation can occur in niobium RF cavity walls even though the cavity never accelerates electron or ion beams in an accelerator; that is, activation of RF cavities may occur during the RF cavity testing phase provided the RF field gradient is 6 to 7 MV or greater. To ensure workers handle these potential radioactive materials safely, C-AD RCTs measure niobium cavities for induced radioactivity after RF testing, and C-AD treats the niobium cavity as radioactive material when appropriate.

4.14.1.Activated Cooling Water

Wherever accelerator beams activate water inside cooling loops or cooling pipes, the C-AD closes or significantly limits radioactive off-gasses from the cooling-water system. A closed system brings water in direct contact with the beam-line equipment or material, such as a magnet, beam dump, or a target, and primary beam hadrons or secondary ones irradiate the cooling water directly producing radioactivity, some of which is gaseous, in the closed cooling-water system. Table 4.14.c lists the long-lived radionuclides measured in water in these systems. Cooling towers, which cool closed-loop systems through heat exchangers, do not have measurable radioactivity above the minimum detectable level (MDL).

In addition to directly activating water, small amounts of radioactivity induced in the magnet materials become corrosion products and transfer to the cooling water. The current AGS water systems, when integrated over the volume of water, contain μCi amounts of radionuclides, such as ^{54}Mn, ^{22}Na, and ^{65}Zn. Only one system contains mCi amounts of tritium. On the other hand, activated cooling water is in closed de-ionized re-circulating systems, thereby greatly reducing the amount of dissolved and suspended radioactive corrosion products. These de-ionizing systems do not remove tritium.

Activating beams create tritium radionuclides in water along with gamma emitting radionuclides, so an on-line gamma detector suffices to monitor the liquid effluent for tritium too. Because tritium only emits a low-energy beta particle, C-AD sends water samples for analyses at an off-site laboratory. During an inadvertent release, on-line gamma-radiation monitors in the sanitary waste-system trigger the diversion of radioactive water away from the BNL Sewage Treatment Plant, and toward a lined hold-up pond for additional sampling and treatment.

Cooling water, especially at the BLIP, also contains small amounts of the short-lived radio-gases, ^{15}O and ^{13}N. The external radiation hazard from circulating these radio-gases with cooling water is momentary, lasting 5- to 10-minutes after shutting down the beam.

Table 4.14.c Typical Radioactivity Concentrations in the C-AD's Closed Cooling-Water Systems
(All systems sampled on the same date, 06/17/2010. MDL = Minimum Detectable Level, ~ 300 pCi/L for tritium.)

Water Systems Name	Location	Tritium Concentration, pCi/L	Other Nuclides, pCi/L
Main Magnet Water Systems	911, 928	57,000	<MDL
Fast Quad System	TE Bldg. 951	2210	<MDL
RF Cavity System	928, 913	105,000	<MDL
SEM System	912, 913, 912A	1270	<MDL
LINAC Transport System	930 HEBT	11,800	<MDL
Beam Stop (BLIP System)	946, 914	1,360,000	^{7}Be - 1910
Booster Magnet Water System	913, 914	123,000	<MDL
Booster RF Cavity System	914	86,400	<MDL
Chilled Water System	911,913, 914	15,300	<MDL
RF-PA Cooling System TE Building	951, 913	172,000	^{7}Be - 235
Multipole Cooling System	911	<MDL	<MDL
H-10 Cooling System	H-10	<MDL	^{7}Be - 101
B944 Test System	944, 902	<MDL	<MDL
RFMG Rectifier System	928	250	<MDL
RF Power System / F-10	928	<MDL	<MDL
RFMG Choke	928	<MDL	<MDL
RFMG Chilled Water System	928	<MDL	<MDL
LINAC RF System	930	380	<MDL
LINAC 10th Station	930	<MDL	<MDL
LINAC OPUS	930	260	<MDL
LINAC Cavity System (1)	930	3140	<MDL
LINAC Cavity System (2)	930	56,700	^{22}Na - 25.7
LINAC Cavity System (3)	930	13,300	^{22}Na – 48, ^{154}Eu - 102
LINAC Cavity System (4)	930	60,300	^{154}Eu – 303, ^{22}Na - 176
LINAC Cavity System (5)	930	97,700	^{154}Eu – 268, ^{22}Na - 142
LINAC Chilled Water System	930	<MDL	<MDL
B925 Test System	925	4110	<MDL
NSRL Main Magnet Cooling System	957	950	<MDL
NSRL Power Supply Cooling system	957, 930A	<MDL	<MDL
Tandem	901A	<MDL	<MDL
Tandem CW	901A	<MDL	<MDL
RHIC Injection System (ATR)	1000P	1240	<MDL
RHIC RF PA Cooling System	1004A	<MDL	<MDL
RHIC Cavity Cooling System	1004A	600	<MDL
STAR Magnet Cooling System	1006A	<MDL	<MDL
STAR MCW System	1006A	<MDL	<MDL
STAR PS Cooling System	1006A	<MDL	<MDL
TPC Cooling System	1006A	<MDL	<MDL
PHENIX Magnet Cooling System	1008C	<MDL	<MDL
PHENIX PS Cooling System	1008C	186	<MDL
RHIC Spin Cooling System	1010	<MDL	<MDL

Jet Target Cooling System	1012A	<MDL	<MDL
EBIS Cooling	930B	<MDL	<MDL
E-Cooling	912	-	-
RHIC Fire Standpipe System	RHIC Ring	<MDL	^{134}Cs - 4.8

The AGS's practice is to monitor closed system- or contact-cooling water before discharge; planned releases of cooling water follows the receipt of analytical data showing acceptable levels for all radionuclides. Additionally, the C-AD monitors the content of metals in both contact- and secondary-cooling waters. The practice and follow-up actions for contact waters are as follows:

- Monitor for radioactivity and metals
- Transport to C-AD's storage tanker trailers at Building 974 for treatment by evaporation, or to BNL's Environmental- and Waste-Management Services Division if the radiation level is higher than allowable for direct discharge into the sanitary-waste system
- Process metals "in-line" if their levels are high
- Discharge to the sewage-treatment plant if the water meets all aspects of the State's pollution-discharge elimination system permit
- Contract a waste disposal facility when all else fails

Regarding hazards from activated animal waste for NSRL; C-AD assumes an animal sample receives a near lethal dose of 500 rad (5 Gy) from 1 GeV/nucleon iron ions. This corresponds to $4x10^8$ iron-ions for a 20 cm^2 beam-size, or $2.3x10^{10}$ nucleons at 1 GeV. For soft tissues, water comprises about 80% of mass. C-AD assumes a sample is made of water, presents a 20 cm^2 area to the beam and is 20 cm long. Given a 30 millibarn (mb) cross-section for tritium production from high-energy nucleon-collisions with oxygen, the total tritium created in a sample from a 500 rad dose is 22 pCi. Thus, C-AD considers activated excreta of animals not measurable nor a significant radioactive hazard.

C-AD transfers radioactive water drained or collected from the various radioactive cooling water systems to one of three 7000-gallon tanker trailers located at Building 974. The stainless steel tankers sit inside a Suffolk County Article 12 registered secondary containment.

Steam heat to the tankers heats the water to prevent freezing in the winter and to evaporate the water throughout the year. The vapor contains low levels of tritium oxide from the activated cooling water systems. C-AD requested a NESHAPs Assessment for this air release. This evaluation assumed C-AD evaporated 25,000 gallons of tritiated water each year.[138] ESH Directorate computed the release to cause an insignificant annual dose to the offsite maximally exposed individual of the public, MEI, of 0.0000864 mrem. This release has no adverse public or environmental effects. C-AD evaluated water-tanker evaporation dose to workers and determined it is insignificant.[139]

4.14.2. Soil Activation and Groundwater Contamination

C-AD described the technique for estimating groundwater activation in prior C-AD SADs. For each significant beam loss location, C-AD estimated the time-averaged transport of ^{3}H and ^{22}Na concentrations from the position of their creation in soil to the water table by the leaching action of rainwater. BNL requires the leachate concentration to be less than 5% of the

[138] Memorandum from B. Hooda to P. Lang, dated June 25, 2001
[139] R. Karol, Radiation Hazards From C-A Water Tanker Tritiated Water Evaporation, March 6, 2002

drinking water standard for ^{3}H and 25 % for ^{22}Na as per the BNL Subject Area on Accelerator Safety[140] including BNL management approval of Internal Waiver 2010-4.[141] If C-AD cannot satisfy these BNL limits, then BNL requires impermeable caps to cover the soil unless BNL management approves otherwise. These caps act like umbrellas to prevent leaching of the radionuclides from the soil to the water table.

Based on studies,[142] ^{22}Na does not leach out of the soil as readily as ^{3}H, and migrates at a much slower rate than the aquifer ground water flow-rate. Because of retarded flow rate for ^{22}Na relative to the ground water flow, ^{22}Na is not a concern in on-site and off-site drinking water. Groundwater at the BNL site flows at about 23 cm per day and ^{22}Na movement is less than 12 cm per day.[143] Unlike ^{3}H, which migrates long distances at groundwater velocity, retardation, radioactive decay and dispersion act to limit the extent of ^{22}Na migration to the area immediately adjacent to the beam loss location. Therefore, there is little chance of any impact to any BNL drinking water well or any offsite receptors.

The quantity calculated to determine the soil radionuclide content is the CASIM "star density" or inelastic collision density. This is the interaction density of hadrons above about 47 MeV. Calculations have shown that approximately 0.075 ^{3}H and 0.02 ^{22}Na atoms are created per CASIM star, adjusted to a 20 MeV threshold. Simulations of beam loss using MCNPX give similar results.

Summaries of known beam loss locations and groundwater contamination issues at C-AD facilities have been written.[144,145,146] Based upon the groundwater flow direction, soil pore velocity, and dispersion, it would take greater than 20 years for any contaminated groundwater to reach the BNL southern boundary, and thus there are no possible adverse health effects to the public. C-AD operations could contaminate onsite potable water supply wells within a period of years following groundwater contamination, but there is a large number of groundwater monitoring wells positioned to monitor C-AD facilities. This active ground water surveillance program allows for rapid detection of a problem and quick response to stop the source. Furthermore, BNL is controlling the pumping of the most vulnerable supply wells onsite to prevent drawing contaminants toward them (e.g., supply well #10 located east of the AGS experimental areas).

Groundwater contamination is an environmental issue related to the BNL EMS program where C-AD commits to protect natural resources. Due to cap installation and groundwater monitoring, groundwater is not a health issue to workers, onsite personnel or the public.

---

[140] Accelerator Safety Subject Area, Design Practice for Known Beam Loss Locations

[141] Brookhaven National Laboratory Internal Waiver Request and Approval 2010-4, approved 2-25-2010

[142] P. J. Gollon, N. Rohrig, M.G. Hauptman. K. McIntyre, R, Miltenberger, J. Naidu, Production of Radioactivity in Local Soil at AGS Fast Neutrino Beam, Informal Report, BNL 43558, October 1989

[143] Brookhaven National Laboratory, Site Environmental Monitoring Report, Chapter 7, Groundwater Protection, 2000

[144] Memorandum for D. Lowenstein and E. Lessard to P. Paul, Beam Stops and Other Sources of Soil Activation at the AGS Complex, August 7, 1998

[145] Investigation of the Tritium Release at Location Upgradient of BNL Well 054-067, December 10, 1999

[146] Brookhaven National Laboratory g-2 Tritium Plume – AOC 16T Record of Decision, April 6, 2007

4.15. Radiation Hazards at BLIP and RRPL

The BLIP facility includes a number of potential radiation hazards for operations personnel who enter the building. The potential impact on other BNL personnel, off site individuals and the environment is very low. However, C-AD considers ionizing radiation at the BLIP a non-standard industrial hazard. C-AD establishes specific Credited Controls for the ionizing radiation at BLIP and describes them in this SAD.

4.15.1. Prompt Radiation Hazards at BLIP

Although there is prompt radiation present in the BLIP building, during routine operations, the dose rates are less than 5 mrem/h at the top of the shield tank. The dose rate falls off rapidly away from the location of the tank. At the building walls, the level is very low and, outside the building, presents no hazard.

The primary concern with respect to prompt radiation safety within the facility is protection against fast neutrons. Fast neutrons form by the direct interaction of the Linac proton beam with BLIP target nuclei. The area outside the BLIP tank is back-filled soil acting as a radiation shield. BLIP operators filled the BLIP tank with sand except for two vertical tubes. One tube, for inspection, has concrete plugs as a radiation shield. The other tube contains the target mechanisms and it comes up into the Hot Cell. BLIP adequately shielded the Hot Cell for any radiation coming up the target tube. BLIP filled the target tube with water, which serves as shielding, but some neutron flux propagates up the target tube and scatters out sideways through the sand shielding. To reduce this neutron source, BLIP installed the equivalent of 30 cm of solid steel, in the form of 45 cm of steel shot with 30 cm of polyethylene beads above it, around the outside of the target tube, ten feet below the top of the sand layer. BLIP refilled the remaining 2.7 m with sand. BLIP based this design on Monte Carlo neutron propagation calculations.[147] After the upgrade was completed, surveys of the area, under operating conditions, were made to verify the adequacy of the shielding, which showed neutron dose rates at all survey locations of less than 0.1 mrem/h. Periodic routine surveys verify that continues to be the case.

C-AD designated the BLIP shielding as a Credited Control. C-AD designed BLIP shield to reduce to safe levels the prompt radiation that results from interaction of 200 MeV protons up to 250 μA, which is the maximum energy and maximum intensity beam. C-AD coordinates significant changes to Linac beam characteristics through C-AD RSC reviews.

4.15.2. Radioactive Materials Hazards at BLIP

Radioactive materials are present in the BLIP Hot Cell. The BLIP Hot Cell operations use approved operating procedures. Inside the Hot Cell, BLIP operators load un-irradiated targets into the transport mechanism and lower them by a motor driven chain drive into the target tube. BLIP operators remove irradiated targets from the chain drive inside the Hot Cell for remote loading into the transport cask, and later transport to the Hot Laboratory in B801 for processing.

BLIP operators control targets (materials, number, size, design) and their irradiation program (time in beam and beam parameters) to maintain compliance with BNL radiological control limits. If radiological dose or exposure values are elevated within the facility, operators return irradiated targets to the shielded shaft to allow additional decay.

---

[147] Monte Carlo Neutron Shielding Calculations, prepared by H. Ludewig & M. Todosow, May 1995

BLIP shielded the Hot Cell to maintain a safe working area for an operator using the manipulator. BNL's RCD checked shielding calculations, using MicroShield, for targets irradiated at maximum BLIP intensity.[148] BLIP constructed the Hot Cell with 1.2 cm steel panels filled with 15 cm of lead, and 36 cm of lead glass shielding and lead collars at certain points. The radiation levels are generally below 5 mrem/h. Localized hot spots up to 25 mrem/h exist and RCD posts to warn staff.

Each of the Hot Cell doors interlocks to an alarm indicating an open door. The alarm triggers a beam interrupt and sends a notice to the MCR. The doors are also under a dual independent padlock system with one lock controlled by BNL's Facility Support Services (FSS) and the other by BLIP workers.

There is activation of parts of the BLIP tank and the target drive assembly nearest the beam interaction zone, but there is no exposure to personnel. Operators can dismantle the target drive assembly for repair and bring it into the shielded Hot Cell.

Exhaust ventilation of the Hot Cell creates a negative pressure in the cell. This ensures that airborne radioactive gases or particulates will not leak into the room. Gases vent up the Building 931 stack. If the airflow falls below the set point for safe operation, an alarm sounds and interlocks interrupt beam. The possibility exists that wind forces may create a positive pressure in the cell, potentially transferring contamination from the cell into the room. In this event, the Continuous Air Monitoring (CAM) detectors alarm to warn personnel who may be in the room, send an alarm to the MCR and trigger a beam interrupt. Under these circumstances, personnel exit the room.

4.15.3.MCI for BLIP

The MCI for the BLIP facility is inadvertent exposure to irradiated targets in the Hot Cell. While there are other accident scenarios that appear to produce potentially higher exposures to prompt beam radiation, they require simultaneous failure of multiple hard-wired interlocks. The coincident combination of those failure events are possible but not credible, as compared to the inadvertent exposure to unshielded targets, which could occur due to human acts/errors, and hence is credible. The physical opening of the Hot Cell door or the target transfer porthole when the cell contains multiple high level sources could result in exposure levels as high as 500 rad/h. While alarms sound when the door opens, there is still the potential for some time to pass before the door is resealed, terminating all exposure. Operators open the heavily shielded door manually. It is well balanced and operators can fully close it within 10 seconds.

Assuming 500 rad/h exposure rate, 10 seconds to open the door, 10 seconds to realize the alarms all going off are due to the presence of high radiation from the Hot Cell, and 10 seconds to close the door; creates a maximal exposure time of 30 seconds and a potential dose to the primary individual of 4 rem. The dose would be less if the individual immediately exited the building at the sounding of the alarm.

In addition to requiring controlled keys for the Hot Cell doors from both FSS and the BLIP staff, radiation monitors in the room would immediately alarm if the Hot Cell door opens

[148] MicroShield Radiation Shielding Calculations, prepared by K. Kolsky, Reviewed by H. Kahnhauser (RCD)

with sources present inside. Operators perform Hot Cell door openings under an RWP that requires RCT coverage, wearing alarming personal dosimeters and using an operable radiation survey meter.

4.15.4. Monitoring of, and Access to BLIP Radiation Hazards

BLIP installed monitoring- and detecting-devices in areas where prompt- or residual-radiation may be present. A BLIP facility's ionization chamber indicates the radiation level in the Hot Cell. A high reading on the monitor alarms and activates the Fast Beam Interrupt (FBI) system at the Linac. To prevent unauthorized personnel entering the pits or the Hot Cell, operators padlock the pit covers, and the Hot Cell's doors. The keys are under administrative control. Access to either of them for maintenance is covered by both Radiation Work Permits, and operating procedures.

Adjacent to the Hot Cell in room 931B, where BLIP expects the ambient radiation levels to personnel to be the highest, another ionization chamber monitors radiation levels. High readings on this monitor will alarm, will activate the FBI system, and will turn off the first BLIP bending magnet in the Linac. BLIP monitors the air in the general room's environment. When this monitor reaches a given set point determined by FSS procedure, it activates local- and remote-alarms and the FBI system. The BLIP operators mounted an area-radiation monitor in the instrumentation panel of the control room (931A) with local alarms, and located portable meters for radiation surveys in building 931C. BLIP personnel check the instruments' operability as required.

BLIP uses procedures to define responses to all alarms. The RCTs routinely survey for radiological contamination; generally, it is below Contamination Area levels.

During all operations involving handling of significantly radioactive materials outside the Hot Cell (e.g., target transfers), the FSS monitor personnel-exposure levels and provide contamination monitoring per applicable Radiological Work Permits.

4.15.5. Activated Cooling Water at the BLIP

The activated BLIP cooling water presents an ionizing radiation hazard. Beam power can be as high as 30 kW, and targets under bombardment become thermally hot and must be water-cooled to prevent overheating and possible damage from overpressure. The target cooling system is a recirculation system open to the air only at the top of the target shaft.

The primary mechanism producing radioactivity in the target cooling water is direct irradiation by the proton beam that results in some very short half-life products, primarily ^{15}O, $t_{1/2} = 2$ min, ^{13}N, $t_{1/2} = 10$ min, and ^{11}C, $t_{1/2} = 20$ minutes. They may become airborne by going up through the target transport tube into the Hot Cell. There is a venting system for the Hot Cell that takes its air up through a venting stack. The release mechanisms are complex. Oxygen-15 likely relocates to air by the evaporation of H_2O, and by emission of some as O_2 gas. Carbon-11 likely relocates to air in the form of CO_2, CO, and CH_3OH.[149] The ^{13}N species formed by radiolysis of water is mostly NO_3^-, which stays dissolved in the water, although several percent may volatilize in the form of NH_3. Beam produces a small amount of ^{7}Be by nuclear reactions on oxygen in the water. However, ^{7}Be is not volatile and the BLIP has not found it in air

[149] T. Stenstrom, PhD Thesis, 1970, University Of Uppsala, Sweden, Radiolysis of Water by 185 MeV Protons

emissions. Very small amounts of other non-volatile radionuclides in the cooling water enter the water following recoil reactions in BLIP's structural materials and target windows; beam produces these nuclides by activating the stainless steel in structures. The Hot Cell's ventilation system sweeps all radioactive gases, which relocate to air, out of the building through a HEPA filter and an elevated stack. There is no effect outside the Hot Cell and inside the building from this source of radiation.

The radiation dose rate from radioactivity in the cooling water is proportional to the proton beam current, with approximately 6 rem/h expected at the pump and filter under typical beam conditions; BLIP shielded both of them. The pump, heat exchanger, filter and associated plumbing are located in trenches or pits below the floor level. The covers include two-to-three inches of lead; BLIP used the MicroShield code to determine the shielding requirements.[150] BLIP documented the calculations, and the FSS reviewed them.

The chiller loop starts at the process loop's heat exchanger and then goes outdoors to a mechanical chiller, moves through an expansion tank, a circulating pump, and then returns to the process heat exchanger. The water with an approved environmentally friendly antifreeze additive in this secondary loop is not radioactive. Thermally insulated and heated piping on the exterior of the building prevents freezing.

Other than routine water-sampling, typically 1 mL samples, operations personnel have no direct contact with the water. The components of the process-cooling system (e.g., pipes, filter, heat exchanger, pump, valves) all are contained within the Hot Cell or lead-shielded pits in the building's floor. Operators experience less than 5 mrem/h. RCD documented these calculations in MicroShield Radiation Shielding Calculations.[151]

4.15.6. Target Radioactivity in Cooling Water at BLIP

Periodically, the cooling water may contain some radioactivity because of a leaking target but this is measurable only after the decay of ^{15}O and other short-lived activation products. Gamma-ray spectroscopic analysis of water samples can identify if there is a target leak and, from the characteristic radiation signature, pinpoint the specific leaking target. Daily sampling and such analysis of the cooling water detects leaks after the decay of the water-activation products. To prevent the spread of contamination, operators recover leaking targets from the target area, bag them in the Hot Cell, and load them into the transport cask. Leaking targets do not introduce new hazards or significantly increase the level of existing ones.

4.15.7. Cooling System Failures at the BLIP

The cooling system has redundant pumps on both the process- and chiller-loops, and a dual compressor chiller with a back-up heat exchanger. Multiple flow and temperature sensors monitor the water-cooling system for the target mechanism, including monitoring the flow in the individual target boxes. Any improper indication initiates alarms and the Linac's FBI. BLIP also monitors the water level in the target shaft; readings too high or too low engender similar actions.

---

[150] MicroShield Radiation Shielding Calculations, prepared by K. Kolsky, Reviewed by H. Kahnhauser (RCD)

[151] Ibid

There are several sources of water leaks, i.e., target cooling water, tanks, domestic water, and rainwater. Many have dedicated leak indicators and associated alarms. Should a target cooling-water system leak, radioactive water would be contained within the facility. Alarms and their consequences would trigger notifications and automatic actions. Operators perform follow-up under work planning and control requirements.

If either the Target Cooling Water Tank or the Underground Storage Tank were to leak or overflow, the spillage would be contained and alarms would sound. Both conform to SCDHS Article 12 and SBMS's requirements.

Significant domestic water spills in the facility or rainwater intrusions potentially could enter the Target Cooling Water Tank or the pump/filter pits, thereby triggering the same alarms and actions as previously described.

4.15.8.Environmental Impacts from Water Releases at the BLIP

BLIP personnel postulate no direct liquid releases from the BLIP. All radioactive water has secondary containment, per Article 12 of Suffolk County Sanitary Code.

BLIP fills the target shaft (Target Cooling Water Tank, SCDHS #422, BNL tank #931-B-03) with de-ionized water. An alarmed leak-detection system identifies water in the secondary containment should the target shaft develop a leak. Level gauges monitor the water level in the tank, and trigger alarms to identify over-fills and water losses. A slow build-up of longer-lived activity, mostly Be-7, necessitates periodically replacing this water.

There is a ~550-gallon capacity holding tank (Underground Storage Tank SCDHS #423, and BNL tank # 931-B-04) buried under room 931C, that is used hold target cooling water removed from the target shaft. It has double-walled steel, the exterior of which is sprayed-coated with resin/fiberglass to minimize corrosion to the outside of the tank. An alarmed leak-detection system in the interstitial space between the tank walls identifies water in the secondary containment, should the primary tank develop a leak. Level gauges monitor the tank's water level, and are alarmed to identify a high level. When it is necessary to remove water from the tank, the C-AD pumps it to a mobile tank or to drums for disposal.

4.15.9.Soil Activation at BLIP

Secondary fast- and thermal-neutron flux activates the soil surrounding the BLIP tank. Secondary neutrons travel principally in the forward (beam) direction and, after leaving the 41 cm diameter water-filled shaft, traverse about 2 m of air before entering the soil. The activation levels are a function of the neutron flux, neutron energy, the elemental abundances in the soil, their activation cross-sections, the attenuation of the neutrons with depth into the soil layer, and the duration of irradiation. In 2000, BNL conducted state-of-the-art numerical modeling of soil activation at BLIP using Monte Carlo radiation transport codes, including LAHET-283, MCNP, and ORIGEN-2B. As expected, the findings indicated that the highest concentrations of radionuclides are in soils directly adjacent to the tank.

Actual core samples at different soil depths and distances from the tank indicate the level of radioactivity. Table 4.15.9 shows some results.

Table 4.15.9 Measured Soil Activation at BLIP

Isotope	Half-life (y)	Activity (pCi/g)
H-3	12.26	4020
Be-7	0.147	73,200
C-14	5730	4.53
Na-22	2.61	42,600
Fe-55	2.73	5900

Of the entire inventory of radionuclides produced in the soils surrounding the BLIP target vessel, BNL only detects tritium and sodium-22 in groundwater, both of which have long half-lives and leach from the soils by rainwater infiltration. The groundwater table is located approximately 10 m below the base of the BLIP tank; no BNL or private water-supply wells are located immediately down gradient of the BLIP facility.

4.15.10. Credited Controls for Soil Activation at BLIP

In 1998, tritium was detected in the groundwater immediately down gradient of the BLIP facility at concentrations exceeding the 20,000 pCi/L drinking water standard. Following an extensive investigation, the likely source of the tritium was determined to be the activated soils that surround the BLIP tank. Because of this impact to groundwater quality, the BLIP facility was designated an Area of Concern under BNL's Environmental Restoration program.

The footprint of the existing building 931 is larger than the area of the activated-soil zone; however, the building did not completely prevent rainwater from reaching that zone. In response to the 1998 detection of tritium in groundwater, BNL improved the storm-water management program at the BLIP to prevent rainwater infiltrating the activated soils below the building. BNL redirected the BLIP building's roof drains away from the building footing, resealed paved areas outside the building, and installed a cap on three sides of the building.

In 2000, the DOE-EM provided funds to install an additional protective measure by injecting colloidal silica grout, referred to as a Viscous Liquid Barrier, into approximately an 85-m^3 volume of the activated soils. Model projections indicated that this treated volume contained more than 99.9% of the activated inventory in the soil. The grout lowers the permeability of the soils, thus further reducing the ability of rainwater to leach radionuclides should the primary storm-water controls or impermeable cap fail.

BNL established a groundwater surveillance program for the BLIP facility. The monitoring-well network encompasses two up gradient wells and five down gradient wells. Surveillance data from these wells verify that the engineered controls are effective in protecting groundwater quality.

Following the 1998 installation of the BLIP cap and other improvements to the storm-water controls, tritium concentrations decreased to much less than 20,000 pCi/L, and remained there until the summer of 2000. BNL detected a short-term increase in tritium concentrations in the monitoring wells following the May-June 2000 injection of the grout, which had displaced a small volume of tritiated soil pore-water. Some of this displaced water entered the aquifer below the BLIP building.

Since 2000, tritium concentrations have risen and fallen sporadically. The groundwater-monitoring data suggest that the periodic spikes in tritium concentrations relate to the flushing of

residual tritium located close to the water table. As the water table rises, older tritium leached from the activated soils prior to their capping in 1998 and from the grout-injection project are flushed from the vadose-zone soils close to the water table. BNL expects that the amount of tritium remaining in this zone close to the water table will decline over time due to this flushing mechanism and by natural radioactive decay, a concept supported by the most recent data.

The C-AD keeps the gunite cap (a Credited Control), the paved areas and the roof drains in good condition to control storm-water infiltration. Although personnel cannot inspect the grout by direct observation, the C-AD expects it to be in good condition and feels it would be effective in preventing significant leaching of tritium from the activation zone should the primary storm-water controls fail.

If unexpectedly high levels of BLIP-related radionuclides reached groundwater-monitoring wells again, BNL would implement its Groundwater Protection Contingency Plan. The Plan requires several formal actions including notifying BNL's management, the DOE, and regulatory agencies, as well as developing strategies to investigate and remedy the situation.

4.15.11. Routine Airborne Activation and Emissions at BLIP

The C-AD provides ventilation of the BLIP Hot Cell and, therefore, the Cooling Water tank, by exhausting the Hot Cell through a stack that is about 18 m above the grade at BNL's site boundary and about 7.8 m above the surface of the BLIP's lower roof. A large variable speed-blower maintains negative pressure in the Hot Cell by pulling air through roughing filters, a High Efficiency Particulate Air filter (HEPA), and a charcoal filter. A flow sensor in the air stream tied into the beam interlock system ensures proper blower operations. Radioactive air emission levels out the stack depend upon several factors, i.e., the beam's energy and intensity, the amount of water in the primary beam's path, the length of the operating period, and ambient temperature and humidity.

The C-AD monitors post-HEPA exhaust continuously for gaseous- and particulate-radioactivity during the beam's operation; the former arise chiefly from proton irradiation of the cooling water (^{11}C, ^{15}O, and ^{13}N). The C-AD forwards such output data to BNL's Environmental Protection Division (EPD) who calculate airborne radioactive emissions, and determine the site-boundary dose to the Maximally Exposed Individual (MEI). The C-AD continuously monitors for particulate- and tritium-emissions from the stack; the EPD analyzes data weekly and reports potential impacts from all radioactive air emissions from BLIP in BNL's Annual Site Environmental Report and the annual NESHAPs Report.

The C-AD also tracks air emissions from BLIP indirectly by monitoring the total beam intensity in micro-amps and hours of beam operation. BLIP demonstrated the precision of the correlation of micro-amp hours to radioactive air-emissions, and hence its value as an emissions-tracking tool. The BLIP records micro-amp hours daily during beam operation, so enabling them to track total emissions in real time.

Previously, BNL determined the annual dose from the BLIP facility to be well below 0.1 mrem to the MEI. However, review of this archival data revealed that the EPD considered only the emission of ^{15}O in dose estimates. In 2001, routine confirmatory sampling identified ^{11}C as an additional emission component. Therefore, the EPD included ^{11}C in assessing dose for the MEI.

Furthermore, in calendar year 2001, the emissions from BLIP facility reached 0.137 mrem to the MEI, as calculated using EPA's CAP88 code, exceeding the 0.1 mrem dose limit

requiring continuous emissions monitoring. This rise in emissions and dose reflected an extraordinarily long operating period; 37 weeks versus the typical 10 to 16 weeks. The operating period actually represented two runs in fiscal year 2001 and fiscal year 2002, which ran back-to-back in calendar year 2001. Normally, emissions at this level need continuous monitoring, and BLIP continuously monitors emissions.

In 2004, BLIP installed Plexiglas housing within the Hot Cell enclosing the top of its target shaft and the target-drive mechanism, and added a variable damper in its ventilation duct. BLIP intended both features to lower air emissions by reducing the air exchange rate over the target cooling-water tank.

In 2008, anticipating increased usage of the BLIP, and, therefore, the potential for increased emissions. BNL applied to the EPA for increased emissions from BLIP based on plans to upgrade the exhaust stack and monitoring system to be compliant with national standards. The EPA approved[152] an increase in BLIP's operating hours based on a projected annual offsite dose-equivalent of 0.2 mrem/y, and sanctioned the modification of the BLIP stack to be ANSI-compliant.

In April 2010, the C-AD measured elevated levels of airborne radioactivity near BLIP above 50-microR/h, which is an RCD ALARA trigger for radiation in uncontrolled areas onsite. Thereafter, the personnel from C-AD and BLIP determined the reason for the higher than routine emissions. To do so, they measured airborne emissions and ground-level exposure rates near BLIP using different beam energies and intensities, different routine-production targets (e.g., RbCl, Ga), different beam-shape tunes (e.g., Gaussian tune), and different fan speeds for the emissions. Both groups studied routine BLIP targets with 20 mm of water exposed to proton beam, and with the unique targets used in 2010 with up to 65 mm of water exposed to this beam. BLIP irradiated these targets during each study for 24 hours or less if radiological surveys at ground level documented elevated levels of radiation above 50-microR/h in uncontrolled areas for 8 hours or more. Their conclusion was that the unique 2010 targets with more water path exposed to higher energy proton beam caused the higher than routine emissions from BLIP's stack.

Since transferring to the C-AD in FY11, BLIP limited the water path exposed to high-energy proton beam to 20 mm or less by installing vacuum spacers in the beam-target path, and by placing the unique targets downstream of routine ones, so that they receive lower energy beam. Consequently, the measured ground-level exposure rates in 2011 were the same as in the years before 2010, that is, about 5- to 10-microR/h in uncontrolled areas near BLIP, which is similar to natural background levels.

In 2010, when the C-AD observed higher ground-level exposure rates, the BLIP facility had operated over 26 weeks. During that year, the BLIP released 1741 Ci of ^{11}C and 4320 Ci of ^{15}O; these emissions resulted in a projected 0.92 mrem to the MEI from BLIP operations.[153] The annual MEI limit under the NESHAPs permit for BLIP (EPA # BNL-2009-01) is 10-mrem/y because the new BLIP stack is ANSI-compliant.[154] BNL completed the stack and monitoring

[152] EPA Response to NESHAPs Permit Application, Letter from P. Giardina (EPA) to M. Holland (BHSO), 9/25/2008

[153] 2010 BNL Radionuclide Air Emissions Annual Report

[154] The current BLIP stack meets the requirements in 40CFR 61.07: Application for approval of construct or modification; 40CFR 61.93: Emission Monitoring and Test Procedure; and Federal Register/Vol. 6, No. 174/Monday, September 9, 2002: Amendment to NESHAP Subpart H for ANSI requirement (effective date January 1, 2003).

modifications after the EPA approved the modification in August 2009, just prior to the 2010 running period.[155, 156]

4.15.12. BLIP Target Gas Emissions

If a target leaks while in the beam, there may be some gaseous diffusion through the leakage of krypton, for example, potentially resulting in an airborne radiation-release. Since the gas first must diffuse through the irradiated salt in the target and then out of the target's containment, the amounts of radioactive gas entering the water are small and its daily water-gamma assay will indicate the leak. BLIP removes and contains leaking targets to prevent further gas release to the environment. Although this is good management-practice, the C-AD determined that BLIP could not reach NESHAPs permit limits from this mechanism.

The EPD studied the dose at the site boundary and at nearby buildings resulting from a hypothetical catastrophic failure of the NaI target; they postulated this as a sudden total release of several curies of Xe-123. Calculated doses were well within guidelines.[157]

4.15.13. Particulate Emissions at the BLIP

The exhaust stream from the Hot Cell could contain particulate radioactive contamination. For any type of such release, the HEPA filter system installed in the stack would capture and hold it.

4.15.14. Transporting Radioactive Materials from the BLIP

The BNL Transportation Safety Officer reviewed the hazards and approved controls associated with the on-site transfer of irradiated targets and related materials from the BLIP to the Building 801 Target Processing Laboratory. BLIP procedures require appropriate transportation controls and safety assessment, and relevant RWP(s). To transport the targets, high-level radioactive waste or other radioactive materials, the BLIP uses a custom lead and steel cask (~5300 pounds) and a forklift. Using aligned shuttered lead doors ("target porthole") on the Hot Cell and on the cask, BLIP personnel place the targets into the cask with minimal radiation exposure to personnel. BLIP designed the cask to minimize the possibility of its dropping, or falling off the carrier vehicle, which may be either forklift or truck, and to assure there is no release of radioactivity in such a circumstance. An RCT monitors all Hot Cell-to-cask transfers, and the reverse, and escorts all transports of BLIP targets in a separate vehicle. Approved restraining straps and attachment devices on the cask secure it to the forklift.

If an incident that resulted in a release of radioactive material should occur, the RCT covering the transfer would take charge as "first responders." Containment and area-access control would be their primary considerations. The RCT would summon appropriate assistance via ext 2222 or ext 911.

---

[155] 2009 NESHAPs Application for BLIP Stack

[156] BNL NESHAPs Permit for Radionuclide Emissions

[157] Dose Evaluation for Radioiodine Release from the BLIP Facility, memo from G. Schroeder to L. Mausner, 2/10/1999

4.15.15. RRPL Radiological Hazards

There is negligible risk of radiation exposure from the normal operations of the RRPL to non-occupational personnel and to nearby BNL radiological workers not associated with the RRPL. The areas accessible to the public where the potential of radiation exposures due to RRPL normal operations are possible are

- Parking lot on the west side of Building 801, about six feet from the outer building wall
- The road running along the south side of Building 801, about six feet from the concrete block shielding
- The road adjacent to the northwest side of Building 801

The road running along the south side of Building 801, about six feet from the concrete block shielding, represents the shortest path to an outside area from any radioactive source in the Hot Cell in the TPL, and the south wall, viz., 41 inches of concrete, is the least shielded wall of Hot Cell. An analysis[158] of the adequacy of the south wall's shielding concluded that normal operations of the TPL would not exceed Administrative Control Limits. In addition, the RCTs routinely measure radiation levels outside the TPL when significant dose rates arise in Room 2-66A, or when large quantities of radioactive material are present in Hot Cell, such as when the TPL receives irradiated targets or if target bodies are disposed of. The RCT's survey and monitor RRPL operations to ensure acceptable dose rates.

The area of road adjacent to the northwest comer of Building 801 receives radiation exposure from the HEPA/charcoal filter bank located on the roof of the Semi-Works Filter Room (MEMD-l). To reduce such exposure, the C-AD partially shields the filter bank with a 10-cm-thick steel wall. In addition, the RCTs routinely monitor the HEPA filter bank and road to verify acceptable radiation dose rates and compliant radiation-area postings.

The radiation levels for general access within Building 801 adjacent to the RRPL are usually less than 1 mrem/h. The C-AD posts the RRPL as a Radiological Buffer Area allowing only appropriately trained personnel unescorted access to these areas. The RCTs periodically survey radiation and contamination to verify the expected levels in this area. They post radiation-survey maps on the primary entrance doors to the TPL and the Vault (Room 2-51) to alert personnel when an unusual radiation exposure condition exists within the facility. The most significant source of routine exposure to BNL's non-RRPL personnel results from the periodic change-out of the various roughing and HEPA filters. To maintain their radiological exposure ALARA, the filters are of a "bag-in, bag-out" type that minimizes exposure time, and the potential for spreading contamination.

BNL staff undertook an evaluation[159] to determine the worst-case on-site radiological exposure assuming a worst-case release from the RRPL. It showed that, in the absence of any filters, the radiological dose to an individual on the Laboratory site would be 10 µrem.

Handling radioactive material in the RRPL presents a potential for radiation exposure to RRPL personnel. For routine and non-routine operations, C-AD classifies radiation hazards by work area as follows:

- Peripheral Work Areas: The radiation levels in the RRPL routinely are below 1 mrem/h except in those spaces posted as Radiation Areas; the C-AD accordingly posts specific laboratories, depending on the radioactive material in use. The Vault (Room 2-51) is a posted Radiation Area, as is the TPL

[158] Archival TPL South Wall Shield Analysis, 1995
[159] B-80l Hotspot Analyses, 2006

- Hot Box/Hot Cell Operations: RRPL workers handle radioactive material remotely in the hot boxes or hot cell. BNL's safety analysis of the adequacy of the shielded enclosures used in the TPL[160] concluded that for anticipated operations, the radiation shielding provided by the hot boxes and hot cell is adequate. Radiation levels at hot cell operator locations generally are below 5 mrem/h
- TPL Fume Hood Operations: Work with dispersible radioactive material at levels above "bench top" limits occurs in ventilated enclosures, at either hot cell/boxes, or fume hoods. Workers transfer radioactive material to/from the hot-boxes/hot-cell via the radioisotope fume hood attached to Hot Boxes 1 and 2, and another fume hood attached to Hot Box 7. Shielding, viz. stacked lead bricks and lead-glass viewing windows, minimizes the risk for whole-body radiation exposure. Workers minimize radiation exposures to the extremities, the hands and arms, by using long handled tongs where possible. They place highly contaminated materials from the hot cell/boxes' hood in secondary containers, primarily plastic bags, before removing them from the hood. When shielding is required, workers may place contaminated materials in small, hand-carried lead pigs. All work with dispersible radioactive material is conducted under an RWP
- Radioactive Material Transfer to/from Shielded Enclosures: RRPL workers transfer high-level radioactive material routinely to and from the shielded enclosures in lead pigs. They brings high-level radioactive material into the Hot Cell in the target-receiving area (Room 2-66A) or Hot Box 7 using specially designed transfer pigs that mate to the shielded clam-shell opening on the east wall of the cell/box. The RRPL remotely transfers a source with negligible potential for radiation exposure to operating personnel. They also bring high-level radioactive solid-waste out of Hot Cell 1 or Hot Box 7 through the clamshell opening, remotely transferring the waste inside a one-gallon can into the transfer pig or other shielded container. The RRPL's safety analysis of the adequacy of the shielded transfer pig used in the TPL[161] concluded that for anticipated operations, radiation exposure levels at contact with the pig routinely fall below 25-mR/h. The RRPL controls transfer of targets from the BLIP to the TPL by RWPs. An RCT monitors these transfers, with radiation surveys of the pig and contamination surveys of the target-receiving area after the job is completed
- Acid Scrubber Operations: The acid-scrubber system operates near the west wall of the target-receiving area. Periodically personnel measure the pH of the buffer solution, replacing it if the pH falls outside the normal value or when system's radiation levels approach the predetermined action level. Maintaining this system requires minimum radiation exposure to TPL personnel. In the past, TPL reached the pH action-limit approximately twice per year. This restriction is coupled with a minimum amount of time required to dispose of the radioactive buffer-solution by opening a valve to let the buffer gravity drain to the D-Waste system
- Other Fume Hoods: Workers use the other HEPA-filtered fume hoods throughout the RRPL for low-level dispersible radioactive materials, lower than those in the TPL
- Other Radiological Work: Workers enter the hot boxes or the Hot Cell for maintenance and cleaning operations, and other non-research related work under either general- or job-specific-RWPs

---

[160] BLIP Upgrade Shielding Review, 1993
[161] Ibid

This work accounts for a majority of the radiation exposures received by personnel during RRPL operations. The C-AD does not allow personnel access into Very-High-Radiation Areas or into areas where workers could exceed administrative dose-levels during the course of the job.

4.15.16. RRPL Environmental Radiological Hazards

During the normal operations of the RRPL, there are negligible radiological emissions to the environment. All the radiological facilities within the RRPL are HEPA-filtered, and some are charcoal-filtered. The C-AD disposes of all radioactive waste through the D-Waste system or as solid waste through the EPD. The RRPL's staff monitors all HEPA-filter differential pressures. Within the TPL, high differential pressure gauge readings and low airflow readings alarm on the ventilation panel. BNL monitors radioactive emissions from the Main Ventilation System. The EPD[162] evaluated a worst-case scenario of radioactive emission from RRPL, concluding that lacking any filters, operations would not exceed the public's doses limits. Workers routinely package radioactive materials for on-site transfers, and off-site transportation. The C-AD adheres to the requirements of the SBMS Subject Area for the Transfer of Hazardous and Radiological Materials On-site, and similarly for their transportation off-site. Only qualified staff performs such tasks using the approved procedures,

4.15.17. RRPL Accident Scenarios

Handling radioactive samples in any area within the RRPL potentially could spread radioactive contamination. RCTs routinely survey areas of the RRPL accessible to personnel for contamination; workers minimize its spread through work planning and control. The following are possible accident scenarios that would spread radioactive contamination:

- Transfer of Material Using Lead Pigs: Workers transfer high-level radioactive samples brought into the TPL inside secured lead pigs that are monitored by the Facility Support Group. These actions assures that the sample does not fall out of the pig during transport
- Spilling a Radioactive Sample in a Fume Hood or on the RRPL Floor: Personnel work in fume hoods within a containment tray or behind temporary shielding; this is dependent upon the hazards present. HEPA-filtered fume hoods for work with dispersible radioactivity operate under negative pressure to prevent spread of airborne contamination. Personnel working within the fume hoods wear gloves, and possibly, double gloves and sleeve covers depending upon the type of work, as stipulated in the RWP. Workers ensure that all radioactive samples brought out of the fume hoods are contained; highly radioactive samples necessitate primary containment, generally lead pigs, and secondary containment such as plastic bags. The C-AD relies on appropriately trained, qualified personnel who understand the processes and radiological controls
- Waste Pipe Leak: A leak in a D-waste pipe within the trenches beneath the floors of the RRPL is a credible accident scenario. These trenches have leak-detection systems to provide early warning to personnel. The pipes have concrete shielding (~ 15 cm) to reduce radiation exposure from a leak. Entrance to the trenches and necessary decontamination work is by RWP and Confined Space Permit, as required

[162] NESHAPs Evaluation - Lab 2-52, 2002 and NESHAPs Evaluation - Room 2-66 and 2-66C, 2002

- Water leaks in the Hot Cell/Hot Boxes: The RRPL pipes domestic- and ionized-water into various hot cells and boxes for processing the targets. If a pipe or valve fails, water accumulates in the hot box and eventually overflows into the TPL area floor, significantly contaminating the TPL. In such events, TPL workers isolate the common supply-line for these water systems to prevent or minimize contamination
- The Ventilation System in the "Hot" Area Fails: The entire system may shut down due to a total loss of normal- and backup-power, a plugged HEPA filter, or by the disruption of airflows. Ventilation shutdown would cause air to flow from areas of high- into areas of low-contamination. There is a backup generator for the Main Ventilation System in case of power failure. The backup generator, located on the south side of B801, starts up automatically within seconds of a power failure, and can supply sufficient power to operate all three of the building's exhaust fans on the roof. The F&O maintains and tests this generator. Upon restoration of normal electrical power, it stops automatically. The loss of a single blower on the Main Ventilation System would not compromise the radiological containment of the radiological facilities within the RRPL. All three off-gas blowers are unlikely to fail simultaneously. If that were to happen, the radiological containment in the shielded enclosures of the TPL may fail, causing contamination within the "hot" area, and potentially in localized non-contamination areas. Alarms would alert RRPL's staff to a ventilation shutdown in the Main Ventilation System. Previous contamination-smear surveys conducted after scheduled fan shutdowns have not detected any contamination outside the containment areas

The C-AD minimizes the danger of plugging of the fume-hood's HEPA filter by using differential pressure (DP) gauges with readouts located on the hood's face; most have airflow alarms. Within the TPL, there are DP-gauges on the filter bank, and both high-pressure and low-airflow alarms on the ventilation panel in the TPL, both indicative of plugged filters. The ventilation-control system monitors each hot box/cell fume hood for airflow through the ventilation ducts, with readouts on the ventilation panel that annunciates the alarms for low-flow condition denoting insufficient ventilation. In addition, there is redundancy in the HEPA system for the Room 2-66 enclosures; thus, dual filters are mounted side-by-side so that a single clogged filter would not eliminate exhausting capability.

Operators can shut down the Main Ventilation System if there is a fire in the Semi-Hot Cell Filter Room (Room 2-63). This room contains the air-pressure controllers for the system. However, BNL constructed this room with nonflammable materials and no flammable material is stored in it.

4.15.18. RRPL and Inadvertent High-Level Radiation Exposure to Personnel

A credible accident in the TPL is an inadvertent radiation exposure to personnel from BLIP targets or target-processing liquids should the doors to a shielded enclosure accidentally open or if during a planned entrance into one of these enclosures personnel encounter an unshielded radiation-source. To prevent these scenarios, the C-AD locks the personnel-access doors to the hot boxes, Hot Cell 1, instituting strict key control along with a dual-lock system that requires an RCT to participate with RRPL staff. All personnel access to these areas is under RWP control. Operators open the cell, using approved procedures, only after proper shielding is in place or removal of significant radiation sources from the work area, followed by a radiation survey by the RCT.

There is no credible accident-scenario causing life-threatening acute whole-body exposure. In the past, the most radioactive source measured in the TPL was an irradiated target at 10-rem/h at 30 cm. For a credible accident scenario, personnel would have to be near it for extended periods, i.e., more than 15 minutes to exceed the C-AD's ACL of 1250 mrem, and 30 minutes to exceed the annual dose limit of 5 rem. The C-AD treated this as negligible risk for several reasons:

- Past operating experience revealed that unshielded radioactive sources only of ~5 rem/h at contact will alarm GM counters not only in the TPL but in adjacent laboratories within the semi-hot corridor, thus quickly alerting personnel
- Shielded enclosures are used where the largest sources are kept locked and under strict key control
- All entries into shielded enclosures require radiation surveys and RCT coverage
- Administrative-procedure control requires the presence of at least two persons (RCT and TPL Operator) when handling irradiated targets, such as bringing them into the BLIP, removing waste from the hot boxes/cell or when entering a hot box/cell
- Before entering a hot box/cell, the RWP and approved procedures require the RCT to undertake a radiation survey that would detect unshielded sources of this magnitude

The unplanned release of radioactivity may occur through several scenarios, as described below:

- Personal Contamination with a High-Level Radioactive Source Risk: The C-AD assessed as negligible such risk after instituting controls. The largest amounts of radioactivity that personnel can encounter, and routinely do, are sources that must be shipped offsite. Workers could drop them when transferring them from the hot box to a shipping pig, thereby possibly contaminating personnel. Radiation measurements show levels of these sources are less than 20-rem/h at contact. The C-AD determined that the risk is extremely unlikely to cause an acute whole-body exposure of 25 rem. RWP and approved procedural controls may require wearing personal protective equipment (e.g., gloves, coats, rubbers) and using remote handling tools when handling samples containing large amounts of activity
- The C-AD judges that dropping/spilling radioactive material not involving direct contamination of personnel has negligible risk, given the current controls. In this scenario, personnel easily can move away from a dropped/spilled source, so minimizing their radiation exposure
- The C-AD assesses the risk associated with a "D-waste pipe or tank leak within the RRPL as negligible, given the current controls. These pipes and tanks lie in trenches shielded with at least 15 cm of concrete, and a leak-detection system is in place. Programmatic clean-up/repair or public concern would be most the severe impact
- The C-AD determined that the risk of a ventilation failure of the Main Ventilation System is negligible with the current controls. There is redundancy in the blower fans for all ventilation, and flow alarms on all but one exhausted device. An archival study of B801 ventilation[163] demonstrated that with all the fans off in buildings 801 and 802 there was a "natural draft" up the old 100-m stack. The building's new exhaust system disconnected the B801 air exhaust from this tall stack, and the exhaust now goes to three new fans on the roof of B801, BEF-1 through BEF-3. These new fans have backup power from a diesel generator located outside the south of the building. Therefore, the spread of contamination is unlikely

[163] Building 801 HVAC Systems

due to draw air into the hot boxes/cell through these exhausts. Programmatic clean-up/repair or public concern is the most severe impact.

4.16. Oxygen-Deficiency Hazards

OSHA defines an oxygen-deficient atmosphere in 29CFR1910.146 as atmospheres containing less than 19.5% oxygen by volume. Normal atmospheres contain ~21% oxygen. The actual effects from oxygen-deficient atmospheres do not begin until the concentration falls to ~17%. If a small number of workers experience potentially oxygen-deficient atmospheres, it is cost effective to use conservative controls for their protection. However, with large exposed populations, the C-AD feels it necessary to establish Credited Controls. For example, the operability of the ODH alarms and ventilation fans in the RHIC tunnel is a Credited Control.[164] With too little control, the injury rate may be unacceptably high. The C-AD also puts controls in place to prevent acute injury from low oxygen-concentrations.

Controls address two types of exposures: One where a known oxygen deficiency exists; the other in which an oxygen-deficiency does not exist but there is a potential for its occurrence. A known oxygen-deficiency could exist, for example, in a confined space in which sampling shows <19.5% oxygen. Work planning determines the controls needed to work safely therein. Controls include periodic atmospheric-monitoring, self-contained breathing apparatus, ventilation, and confined space permits. The premise for controlling the latter condition, a potential oxygen-deficiency, is that the risk to workers should be no greater than that in a standard industrial setting.

If the C-AD stops exposure to a reduced oxygen atmosphere early enough, the effects on people are reversible. If not, permanent damage to the central-nervous system or death can result. Principally, disorientation and unconsciousness hinder people in escaping from areas of oxygen deficiency. For personnel actively working, faulty coordination occurs at ~13% oxygen, and loss of consciousness at ~10%.[165] A person in the general area of a catastrophic release of an inert gas at the RHIC and unharmed by a pressure wave would be alerted to the escaping gas by the noise, and, if a cryogenic gas, by the cold. That person may be able out-walk the expanding inert-gas cloud by holding their breath and safely moving to the nearest exit.

The C-AD focuses on controls for preventing potential exposure of workers to oxygen-deficiency in the general area of a potential release, but not the immediate vicinity of the release point. The survival of individuals in the general area is highly probable because of the administrative- and engineering-controls, monitoring systems, and training.

For the unlikely scenario wherein an individual is in the immediate vicinity of the equipment at the time of failure, that person would lose consciousness in seconds, and probably would not survive. If the release was a cryogenic gas, the cold gas could cause irreversible lung damage.

Training for workers in areas of potential oxygen-deficiency hazards covers methods to become aware that a release of inert gas has occurred, escape methods, and the use of proper oxygen-monitoring devices and escape packs. In addition to training on using them, the C-AD provides ODH information in facility- specific courses required of all C-AD employees and users. For example, Collider Users Training covers ODH posting, the effects of oxygen

[164] RHIC ASE, Section 2.4
[165] ANSI/AIHA Z88.2 (1992), Practices for Respiratory Protection

deficiency, the ODH classification system, the ODH alarms, and when and how to evacuate the Collider.

The following description of the graded approach shows the methodology used to determine the controls necessary for areas having a potential for oxygen deficiency. The C-AD recognizes these simplified methods cannot quantitatively address the effects of the concentration gradients of the inert gas during its transient release. Thus, they employ a simplified analysis that assumes uniform mixing of the gas that is reasonable for helium and lighter gases. For heavier gases, such as Tandem insulating gas, the C-AD adopted a spectrum of assumptions bounding the cases for both uniform mixing and no mixing. As noted, individuals near the location of any release have higher likelihoods of injury or death. Thus, the C-AD relies on a combination of the BNL's SBMS ODH methods coupled with engineering judgment, worker training, evacuation procedures, and monitoring equipment to ensure an acceptably safe workplace.

With the BNL SBMS models, the C-AD determines the oxygen-deficiency hazard (ODH) classification of a building. The SBMS based their model on the Fermi National Accelerator Laboratory's (Fermilab) ODH model. It is a prescribed method to determine the necessary level of hazard control for a building having the potential for oxygen deficiency. The C-AD uses a graded approach to implement hazard controls as a function of the computed ODH fatality rate. Fermilab selected the fatality rate as the hazard index since death is the extreme effect of such exposure. The average industrial fatality rate, $\sim 10^{-7}$/h, triggers protective measures other than training and postings.[166] In addition, the SBMS prescribes graded controls to reduce the potential of acute oxygen-deficiency injury in which injury is a function of the minimum oxygen concentration to which the individual is exposed.

The fatality rate in the SBMS model is the product of two quantities. One quantity is the probability per hour of an initiating event causing an oxygen deficiency; the other is found by estimating the minimum oxygen-concentration during the transient, assuming instantaneous mixing of the air and inert gas in the building volume. It is represented by a factor between 0 and 1, (Figure 4.16.a). The C-AD uses the computed fatality rate to define the ODH class necessary to protect personnel.

The ODH fatality rate is

$$\Phi = PF$$

Where
Φ = the ODH fatality rate per hour
P = the expected rate of the event per hour, i.e. initiator frequency
F = the fatality factor for the event, Figure 4.16

The C-AD determines the value of P, the initiator frequency, using actual equipment failure-rate data provided by Fermilab, and by the Nuclear Regulatory Commission, and updates it with actual RHIC-failure rates.

[166] T. Miller and P. Mazur, Oxygen Deficiency Hazards Associated with Liquefied Gas Systems: Derivation of a program of Controls, Am. Ind. Hyg. Assoc. J. 45(5):293-298(1984)

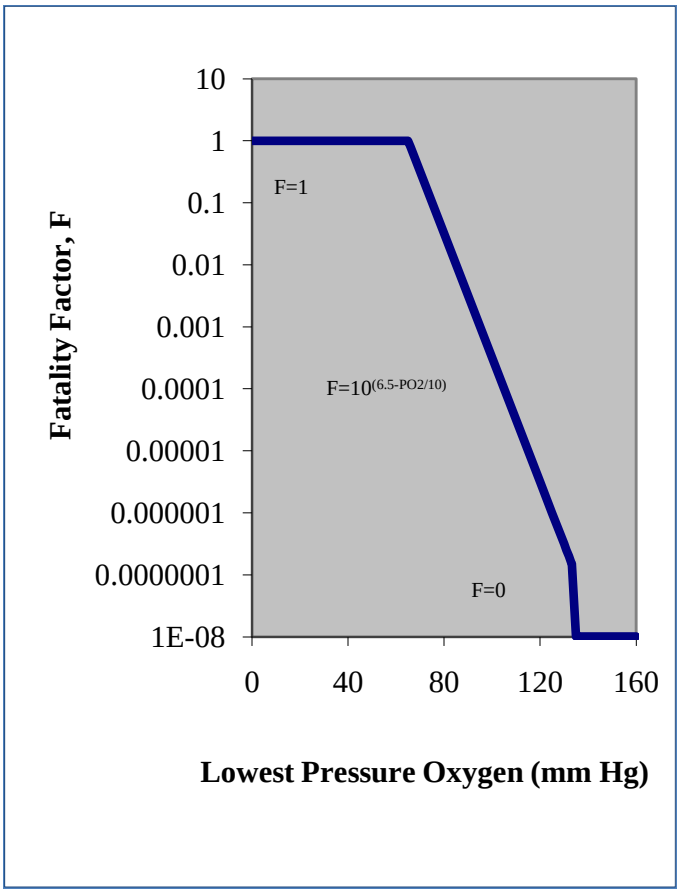

Figure 4.16.a Graph of the Fatality Factor

The value of the fatality factor, F, is the probability that a fatality will result from a particular gas-release. Figure 4.16.a defines the relationship between the value of F and the computed oxygen partial pressure. To compute the partial pressure the mole fraction of oxygen in the building atmosphere, C-AD multiplies by normal atmospheric pressure, 760 mm Hg. If the oxygen concentration is greater than 18%, about 137 mm Hg, then the value of F is zero, viz., no exposures above 18% contribute to fatality. If the oxygen concentration is 18%, then the value of F is 10^{-7}. At decreasing concentrations, the value of F increases until at some 8.8% oxygen, about 67 mm Hg, the probability of fatality is unity. At this concentration, only one minute of consciousness is expected.

The C-AD uses the computed value of the fatality rate,Φ, to determine the ODH class of the building, as shown in Table 4.16.b.

Table 4.16.b ODH Class and Fatality Rate

ODH Class	Fatality Rate (per hour)
NA	$<10^{-9}$
0	$>10^{-9}$ but $<10^{-7}$
1	$>10^{-7}$ but $<10^{-5}$
2	$>10^{-5}$ but $<10^{-3}$
3	$>10^{-3}$ but $<10^{-1}$
4	$>10^{-1}$

Based on the minimum calculated oxygen concentration, the C-AD establishes the controls detailed in Table 4.16.c and 4.16.d.

Table 4.16.c ODH Controls

ODH Classification	Controls
0	Postings and training
1	Postings Training, including practical demonstration of: Personal oxygen monitor Self-rescue respirator (supplied atmosphere)
2	Ventilation Multiple personnel in communication (“2-staff rule”) Postings Training including practical demonstration of: Personal oxygen monitor Self-rescue respirator (supplied atmosphere)
3	Ventilation Unexposed safety monitor/observer Postings Training including practical demonstration of: Personal oxygen monitor Self-rescue respirator (supplied atmosphere)
4	Ventilation Unexposed safety monitor/observer Postings Training including practical demonstration of: Personal oxygen monitor Self-contained breathing apparatus (SCBA)

Figure 4.16.d ODH Controls for Acute Effects of Oxygen Deficiency

Minimum Calculated Oxygen Concentration	Controls
≥14%	Controls required by ODH classification
≥10% and <14%	Controls required by ODH classification plus ODH monitoring (either fixed area or POM) that alarms locally
<10%	Controls required by ODH classification plus ODH monitoring that provides alarms/indication both locally and before entering the area

The C-AD requires alarms be perceptible in the environment (e.g., visual or vibration in high noise areas).

The C-AD approximates the oxygen concentration in the building during a release of inert gas by solving the following differential equations. If the exhaust fan is on and the spill rate of gas, R, is less than the exhaust fan capacity, Q, then

$$V\frac{dC}{dt} = 0.21(Q - R) - QC$$

Where
V = building volume, ft^3
C = oxygen concentration, mole or volume fraction
t = time, minutes
Q = exhaust fan(s) flow rate, CFM
R = helium spill rate into building, CFM

If the exhaust fan is off or if the gas spill rate, R, is greater than the exhaust fan capacity, Q, then

$$V\frac{dC}{dt} = -RC$$

The C-AD evaluated all areas that have potential ODH hazards. Oxygen-concentration alarm points vary from 19.5% to 18%, depending upon the location. Alarms set points below 19.5% are acceptable because they warn of accidents and not of planned, routine working-conditions. The C-AD summarizes results for the affected areas in the following sections.

4.16.1.TVDG Oxygen-Deficiency Hazards

The Tandem Van de Graaff uses its inventory of insulating gas (~46% sulfur hexafluoride, ~44% nitrogen and ~6% carbon dioxide and 4% oxygen) to insulate the accelerator tanks. During operation, each tank contains 11,250 ft^3 of gas at 180 psig, i.e., ~35,000 lb or 160,000 ft^3 at atmospheric pressure. The gas has a specific gravity of about 2.85 and a low diffusion rate in air. The C-AD evaluated the hazards and controls for this gas in a detailed calculation for various potential release locations during gas transfer, and during normal

operations.[167] The evaluation encompassed the Tandem accelerator room and pit, mechanical equipment room, electrical equipment room, target rooms, basement, TtB tunnel, and the remote gas-storage area located on the hill above the TVDG building. The analyses included the potential effect of the heavier-than-air insulating gas by examining different cases of no mixing to complete mixing of the gas with the surrounding air, within the affected room's volume. Thereafter, the C-AD made system modifications to reduce the ODH hazards. They included automating the ODH Emergency Purge Fan based on low-sensed oxygen concentration, modifying the ODH Emergency Purge Fan to improve the flow rate of the heavy inert purge gas, and routing the relief-valves exhausts in the Mechanical Equipment Room outside the room. These upgrades limited the control of areas within the Tandem and the gas storage area to an ODH 0 classification. The following table summarizes the ODH classifications of the various areas at TVDG/TtB with and without the Emergency Purge Fan operable. The C-AD identified specific Credited Controls for ODH in the TVDG/TtB ASE, and described their bases in Chapter 5 of this SAD.

Table 4.16.1 TVDG/TtB ODH Classifications

Building Space	ODH Classification with Operable Purge Fan	ODH Classification with Inoperable Purge Fan
Accelerator Room and Pit	0	1
Mechanical Equipment Room	0	2
Electrical Equipment Room	0	1
Target Rooms	NA	NA
TVDG Basement	0	1
Gas Storage Room	0	0
TtB Tunnel	0	1

4.16.2.AGS Oxygen-Deficiency Hazards

The AGS ring near the liquid-helium-cooled Cold Snake Magnet used for polarized-proton running is posted as an ODH 0 area when the magnet is cooled. A leak of cold helium fluid can cause oxygen deficiency, and could occur when the C-AD fills the snake magnet and during normal operation. The magnet has ~ 0.5 MJ of electrical energy during operations. To bracket the consequences of all credible failures, the C-AD analyzed a catastrophic cryogenic pressure boundary failure caused by an electrical arc, and assumed it instantly releases the LHe to the AGS ring volume. The Cold Snake contains ~110 L LHe during normal operation, and attaches to a 500 L LHe Dewar during filling operations, so resulting in ~610 L LHe available for release. The calculation shows that an ODH 0 classification is appropriate.[168] Oxygen monitoring in the location of the Snake Magnet in the AGS ring, either with installed monitors or a personal portable-oxygen monitor, and posting the area as ODH 0 when the Cold Snake is in operation are adequate hazard controls. The C-AD lists specific Credited Controls for ODH in the AGS, Booster Linac, and EBIS ASE, and describes their bases in Chapter 5 of this SAD.

[167] L. Snydstrup, Calculation of Oxygen Deficiency Hazards for TVDG, Revision 0, November 5, 2001
[168] R. Karol, AGS Cold Snake ODH Calculation Revisited, December 5, 2008

4.16.3.g-2 Experiment (V-Line) Oxygen-Deficiency Hazards

This experiment is not running currently; when it did, the C-AD identified and operated several ODH areas. Plans are to decommission the g-2 area and transfer re-usable accelerator components to Fermi National Accelerator Laboratory.

4.16.4.RHIC Oxygen-Deficiency Hazards

Mechanisms exist that could release helium into the Collider Tunnel, the Service/Support Buildings housing valve boxes and associated cryogenic system equipment, and the buildings housing the refrigerators and helium-compressors. Table 4.16.4 lists the building's volumes and ventilation rates used in the ODH analyses. For the tunnel, each sextant has 2 to three more ODH fans than the three conservatively assumed in the ODH analysis. The notes to Table 4.16.4 explain the major assumptions of the calculations.

For the refrigerator building, the postulated accident is a truck hitting cold box 5, releasing 1/3rd of the available helium into Building 1005R. With a peak flow rate of 27,000 CFM into the building, and conservatively assuming that the helium-leak rate stays constant, an ODH 1 hazard class condition occurs after about 8 minutes with both ODH fans on, and after 5 minutes with one fan on[169]. This is adequate time for an individual to leave following an alarm; however, the C-AD conservatively classifies this building as ODH 1 when there is liquid helium in the cold boxes.

The RHIC's Compressor Building contains a large amount of helium gas, and the C-AD posts it as ODH 0 to warn staff of this large volume. The ODH exhaust fans limit the minimum oxygen concentration should a major helium pressure-boundary fail during operations.

In the RHIC tunnel, a postulated helium leak from a magnet line would enter the vacuum space and release helium directly into the tunnel when the pressure in the vacuum space increases to about 1.3 atm. About 60 vacuum-relief valves discharge helium at the bottom of the magnet string to the floor; it then moves outward to the tunnel walls. Both STAR and PHENIX have gas barriers to prevent the need to post these experimental areas for ODH hazard. Calculations show the tunnel must be posted as an ODH 0 area when helium is cooled down as long as its temperature is 40 K, and ODH 1 area when it is < 40 K down to operating temperatures.[170] Above 40 K, because of the decrease in density of helium, its release rate would be less than 10% of that at the operating temperature of 4 K.

The six Service/Support buildings do not need controls; however, the C-AD conservatively posts them as ODH 0 areas to raise ODH awareness because of the large inventory of helium in the buildings and for consistency with the ODH controls that were in place until the FY10 run. In the summer of 2009, the C-AD modified the cryogenic valve-box's vacuum relief valves in the Service/Support buildings to direct the relief exhaust gas directly outside the building instead of into it. Additionally, Lexan boxes now encase the valve-box's

[169] R. Karol, Collider Building ODH Calculations – Revisited, dated April 18, 2000 (Revised 5/26/00)

[170] R, Karol, RHIC Tunnel and Service Buildings ODH Calculations - Basis for ODH 0 Classification when Helium Temperature is≥ 40K, January 13, 2009 ; R. Karol, Determination of RHIC Component Helium Pressure Boundary Failure Rates and RHIC Tunnel Sextant, January 3, 2009 and R. Karol, Determination of RHIC Component Helium Pressure Boundary Failure Rates and RHIC Tunnel Sextant, January 3, 2009 and Refrigerator Building and Compressor Building Helium Pressure Boundary Failure Rates, January 5, 2009

electrical lead penetrations, directing any helium release towards the buildings' ceilings. These changes prevent a significant release of cold helium from causing an ODH condition therein.

Unless approved by the C-AD management for special testing or troubleshooting, individuals may only enter the RHIC tunnel when the helium temperature in the magnets is below 40 K provided that the main power supplies of the RHIC magnet are limited to supply a current of ≤ 530 amperes. The C-AD ensures this restriction by enabling the over-current trip circuitry, or by locking out the power supplies, so limiting to less than 1 MJ the energy available to an electric fault in the superconducting magnet when personnel enter the tunnel. The probability of a release of cryogenic helium into the tunnel increases if the RHIC magnet's main power supplies energize to the full operational level of 70 MJ. When power supplies are built to raise the magnetic field to hold 300 GeV protons, then about 100 MJ of energy will be in the superconducting circuit. This energy is stored in each of the ring's magnetic fields. Limiting the energy to below 1 MJ reduces the probability of a significant electrical arc in a main magnet that could cause failure of its helium pressure-boundary.

If the C-AD uses the 80 K Cooler during the collider's shutdown periods, the RHIC tunnel is posted ODH 0 and the tunnel's exhaust fans and oxygen sensors must be in service to limit the minimum oxygen concentration during this transient should a major helium pressure-boundary fail.[171]

The C-AD lists specific Credited Controls required for ODH in the RHIC ASE; their bases given in Chapter 5 of this SAD.

[171] R. Karol, Support Buildings and Collider Tunnel Sextant ODH Classifications with 80K Helium Cooler Operating, November 22, 2002

Table 4.16.4 - ODH Classification for Collider Buildings During Normal Operations

		Bldg.	Total Fan CFM	Frequency [1]	ODH Classification	
Building No.	Name	Vol. (ft^3)	(# Fans)	(per hr)	Case A[4]	Case B[5]
1005H	Compressor Building	250,000	100,000 (4 fans)	$6.4x10^{-6}$	0	0
1005R	Refrigerator Building	240,000	50,000 (2 fans)	$6.6x10^{-6}$	1	1
1001	Collider Tunnel - 1:00	310,000	60,000 (3 fans)	$2.64x10^{-6}$	1	1
1003	Collider Tunnel - 3:00	300,000	60,000 (3 fans)	$2.64x10^{-6}$	1	1
1005	Collider Tunnel - 5:00	390,000	60,000 (3 fans)	$2.64x10^{-6}$	1	1
1006	Intersection Region	NA	NA	NA	NA	NA
1007 1008	Collider Tunnel - 7:00 Intersection Region	400,000 NA	60,000 (3 fans) NA	$2.64x10^{-6}$ NA	1	1
1009	Collider Tunnel - 9:00	320,000	60,000 (3 fans)	$2.64x10^{-6}$	1	1
1011	Collider Tunnel - 11:00	300,000	60,000 (3 fans)	$2.64x10^{-6}$	1	1
1002B	2:00 Support Building	70,000	32,000 (2 fans)	NA[10]	NA	NA
1004B	4:00 Support Building	113,000	44,000 (2 fans)	NA[10]	NA	NA
1006B	6:00 Support Building	85,000	32,000 (2 fans)	NA[10]	NA	NA
1008B	8:00 Support Building	75,000	32,000 (2 fans)	NA[10]	NA	NA
1010A	10:00 Support Building	110,000	22,000 (2 fans) [9]	NA[10]	NA	NA
1012A	12:00 Support Building	110,000	22,000 (2 fans) [9]	NA[10]	NA	NA

Notes:

1. Frequency is the probability per hour that the bounding helium or nitrogen system failure occurs within the building. See R. Karol, RHIC Tunnel Sextant, Refrigerator Building and Compressor Building Helium Pressure Boundary Failure Rates, January 9, 2009 and R. Karol, Determination of RHIC Component Helium Pressure Boundary Failure Rates, January 3, 2009.
2. C-AD assumed the helium spill rates for B1005H and B1005R and the nitrogen spill rate in B1006B conservatively as constant. C-AD set minimum ODH Class for the Compressor Building conservatively at ODH 0 due to the inventory of the helium present.
3. Peak helium spill-rate obtained from AD/RHIC/RD-79, Estimation of Helium Discharge Rates for RHIC ODH Calculations, September 1995.
4. Case A assumed all assumed fans operational. C-AD set minimum ODH Class for the Tunnel Sextants and the Support Buildings conservatively at ODH 0 due to the inventory of helium present.
5. Case B considers one fan failed.
6. For the Compressor Building, the oxygen concentration will only fall to a minimum of 18.8%. C-AD set minimum ODH Class for the Compressor Building conservatively at ODH 0 due to the large inventory of the helium present.

7. For the Refrigerator Building, the time to ODH 1 was determined ($\Phi = 10^{-7}$). See text for description.
8. Tunnel Sextants 1003 and 1011 bound the conditions for all sextants because they have the smallest volumes.
9. In 2007, B1010A and 1012A exhaust fan configurations changed to one original 11000 CFM fan and a new replacement second fan at 13450 CFM in order to allow C-AD to use the original fan penetration for air conditioning of the building. Thus, the original ODH calculations are conservative.
10. In 2009, all six service-buildings had their valve box vacuum space relief valves vented directly outside the building, thus preventing a credible failure that would cause an oxygen deficiency in these buildings.

4.16.5.ERL Oxygen Deficiency Hazards

The C-AD evaluated areas of ERL in B912 that have potential ODH hazards. ODH sensors and alarms are located within the accelerator's enclosure, and within the helium-recovery building. These areas are small enough such that alarms are visible and audible from any location within the rooms. Table 4.16.5 lists the results of the ODH analyses for the affected areas of ERL.[172]

Table 4.16.5 Potential ODH Areas at ERL

Building	Free Volume	Bounding Cryogenic Leak Location	Spill Rate (SCFM)	ODH Exhaust Fan Capacity (SCFM)
ERL Cave in B912	20,000 ft^3	Failure of 1-inch copper LN2 transfer line	3275	13,750
ERL Helium Recovery Building	9500 ft^3	Rupture of Kinney vacuum pump helium discharge line	1150	4850

The ERL accelerator's enclosure volume assumed for ODH analyses conservatively excludes the labyrinth volumes and accounts for the equipment in the enclosure. The ERL helium recovery-building's volume accounts for the equipment in the room. The ODH calculations show that both the enclosure and the helium-recovery building are ODH 0 areas.

4.16.6.Small Blockhouse Oxygen-Deficiency Hazards

The Small Blockhouse in Building 912 contains a polarized SRF electron gun experiment. The C-AD controls hazards therein by following 10 CFR 851, 10 CFR 835, and BNL SBMS's requirements.[173] There are no ASE requirements for the Small Blockhouse; the C-AD sized its exhaust fan to maintain it at ODH 0. The potential leak rates from the SRF gun helium relief (390 g/s) and UHV burst disk (100 g/s) are large ones, and so the C-AD piped these release points directly outside the blockhouse. The helium-spill rate for sizing the exhaust fan is a Dewar fill-line failure (25 g/s). Based on a blockhouse volume of 2700 ft^3, the C-AD determined an exhaust fan with a capacity of 1000 CFM maintains the house at ODH 0.[174] The fan must on before entering the blockhouse if operators attach the Dewar to the fill line, and entrants must wear a POM . Table 4.16.6 lists the findings from the ODH calculation.

---

[172] BNL LESHC Meeting Minutes 06-06, May 18, 2006, Energy Recovery Linac in Building 912 - R. Karol, ERL ODH Calculations, January 8, 2008

[173] Polarized SRF Gun Experiment

[174] R. Karol, B912 Small VTA House ODH Calculations (Revised), June 20, 2008 (Revised 12-3-08)

Table 4.16.6 ODH Calculation Results for Small Blockhouse in B912

Building	Free Volume	Bounding Cryogenic Leak Location	Spill Rate (SCFM)	ODH Exhaust Fan Capacity (SCFM)
Small Blockhouse in B912	2700 ft^3	Failure LHe Dewar pipe inside the VTA House	330	1000

4.16.7.Large Vertical Test Area (VTA) Oxygen-Deficiency Hazards

The Large VTA Blockhouse is a SRF testing facility and C-AD controls hazards by following 10 CFR 851, 10 CFR 835, and BNL's SBMS requirements. There are no ASE requirements for the Blockhouse. The ODH control for this facility requires entrants to wear a POM when working on the top of the blockhouse when cryogenic gas is present in the vertical test Dewar. To get to the top of the blockhouse, the C-AD requires the rolling roof to be open. Any inert gas retained in the blockhouse would vent out of the top of the blockhouse into B912, the large volume of which eliminates the ODH hazard. The C-AD requires an individual using the stairs to wear a POM to get to the top of the blockhouse; the POM alarms at 19.5% oxygen, warning the individual to leave the area.

4.16.8.BLIP/RRPL Oxygen-Deficiency Hazards

There are no existing ODH hazards at BLIP or RRPL that are beyond standard industrial ones. The C-AD evaluated BLIP/RRPL areas following the directions in BNL Subject Area on Oxygen Deficiency Hazards (ODH), System Classification and Controls.

4.17.Electrical Hazards

Chapter 3 and previous SAD revisions describe in detail the numerous electrical devices, magnets, power supplies, vacuum system, RF systems, beam instrumentation and controls employed at C-AD facilities, including its accelerators and experiments.

The sheer number of electrical devices and their conductors installed at accelerator and experimental facilities justifies recognizing electrical hazards as a major personnel hazard, which requires controls. However, the C-AD's electrical hazards are standard industrial hazards. Hence, the C-AD adheres to BNL's SBMS, Electrical Safety, which follows the safe work practices of NFPA 70E, Standard for Electrical Safety in the Workplace, to mitigate these hazards.

4.17.1.AC Distribution

The primary AC distribution is at 13.8 kV. The feeds are underground ones to substations located at various sites. Transformers convert the 13.8 kV to 480 volts AC for subsequent distribution. Because of the very high hazard, the substations are fenced in with controlled access by the BNL's F&O personnel. C-AD personnel do not normally have access to these areas.

Most secondary distribution is 480 V, 3-phase, 60 Hertz, ungrounded delta. The C-AD uses this electrical power directly in many pieces of equipment, motors, pumps, and power supplies. The C-AD further transforms the electrical power to 220/120 V, 3-phase for lights, utility outlets, and all general needs. Substations at Buildings 1005S and 1005H have grounded wye, which the C-AD transforms to 208/120 V. The RHIC tunnel's lighting is 277 V, which the C-AD feeds from 480 V to 480/277 V isolation transformers to reduce the magnitude of the fault current. The 480/277 V neutral is grounded. There are two 4160 V substations at Building 1005H to power the helium compressors. Substations A-500, Q and 925 are grounded wyes. The hazard at 480 V is not only from a 480 V shock, but also from possible arc formation at a short circuit. The short circuit currents are extremely high and an arc can spray molten copper and other materials. The procedures followed on 480 V circuits include training, LOTO or key lockout, circuit-voltage testing, and the use of proper personnel protective equipment.

4.17.2.High Voltage DC

Low Current - In many pieces of electronic equipment there are high voltage, low current power supplies. While the current in some cases may present a direct shock hazard, in others it will be too low to cause a direct injury, but may lead to indirect ones, such as falls, bumps or other physical- or electrical-mishaps. Accelerator and experimental components are prominently marked for a high-voltage hazard and the C-AD may interlock if there is a direct shock hazard. Experimenters equipment use high-voltage power supplies and the C-AD's ESRC reviews each experimental set-up before allowing its usage.

High Current – Current in the range of 10-50 mA passing through the body may cause significant physical harm, The RF systems, and various pulsed magnets, kickers, and other devices, use potentially lethal power-supplies. The C-AD marks all of them properly. The C-AD requires interlocks that actuate on entry to the supply that are hard wired to the power source; panel-indicator lights that show the power supply status; and provides local-remote lockout switches where more than one turn on location is used. The C-AD requires shorting devices, manual or automatic, on capacitor-storage devices.

4.17.3.High Current, Low Voltage

Many devices use high currents, up to several thousand amperes, at relatively low voltages. In most cases, the shock hazards are low, but a short circuit on the lines, just as in the 480 V AC case, can create a physical hazard. Here, the C-AD uses warnings, enclosing of conductors, and interlock devices for this standard industrial hazard.

4.17.4.RF Voltages

RF voltages in the many kilovolt level are present in the accelerating systems. Contact with them can result in shock and deep RF burns. The C-AD requires the same protections as used for high voltage DC.

4.18.Fire Hazards

The primary combustible loading in the injectors, accelerators, collider, and experiments consists of magnets, power- and control-cables, and beam-diagnostic equipment located throughout the complex. None is highly flammable, and with the possible exception of cables installed between 1958 and 1970. Beginning in 2011, the C-AD is reviewing all cables to ensure they self-extinguish upon the de-energizing of electric power. The C-AD uses small amounts of flammable materials routinely in accelerator operations and experiments.

Due to the presence of a system for diverting radioactive liquid effluent to a hold-up pond, there are no environmental impacts due to release of contaminated water from the fire-protection water system. Water sprayed on radioactive equipment may become slightly contaminated, but would enter the sanitary system and be monitored before release. There are no significant amounts of combustible activated materials in the tunnels, rings, transport lines, intersection regions or beam lines, nor significant numbers of radioactive particles in smoke. Thus, there is no significant environmental hazard from a fire at the C-AD accelerators and target areas.

The detectors in experiments at the Collider contain larger volumes of flammable gases; the C-AD documented details of the hazards associated with these experiments in the Appendix 32 to the 1999 RHIC SAD. To mitigate these fire hazards, the experimental detectors have the following controls:

- Mechanical and electrical interlocks
- Flow restrictors
- Designs to industry codes and standards
- Fusing
- Over- and under-flammable gas-pressure protection
- Flammable gas detection, limits on flammable-gas volumes
- Fire detection
- Alarm and suppression systems
- Control of combustible loading
- Ventilation systems
- Safety committee reviews
- Experimenter training for emergencies
- Automatic inert-gas purging systems
- Control of ignition sources
- Work planning

There is no credible accident scenario at RRPL that would release sufficient quantities of chemicals or chemical vapors to cause other than localized consequences. Fire hazards are minimal due to the presence of a fire-detection system, the limited quantities of flammable chemicals, and the paucity of combustible materials.

There is the potential for small fires and explosions at the RRPL due to the presence of flammable chemicals, such as solvents, oxidizing- and reducing-agents, corrosives, flammable metals, and pyrophoric materials. There are ignition sources, such as soldering devices, a heat gun, and acetylene torches. The C-AD minimizes the fire hazard by restricting the quantity of chemicals in the area, providing safe storage for flammable chemicals in fireproof cabinets, handling flammable chemicals inside the ventilated radionuclide-fume-hood, and by maintaining good ventilation throughout the RRPL. The RRPL has a concrete floor. BNL constructed all hot boxes, fume hoods and the hot cell out of nonflammable materials and provided all with ventilation systems. Portable fire extinguishers are located around the RRPL. BNL protects the RRPL with automatic fixed temperature-rate-of-rise heat detectors. Alarms annunciate locally and at BNL's Fire/Rescue Headquarters and Police Headquarters.

4.19. Hazard Controls

The purpose of this section is to briefly summarize the various system features and administrative programs that help to control hazards or the minimize risk of various hazards.

4.19.1.Radiation Protection

The significant hazard at the C-AD facilities is ionizing radiation, and accordingly, C-AD plans operations within the DOE's dose guidelines. The C-AD uses a graded system of controls, such as shields, fences or barriers, locked gates, interlocks and procedures to match access restrictions with potential radiation-hazards that satisfy both the BNL's and DOE's requirements.

Although the Laboratory site is a limited access site, service personnel from off-site or BNL non-radiation workers may work near C-AD facilities or may traverse the complex. The BNL policy administratively restricts the dose to 25 mrem per year to such people. The C-A Department adheres to this policy by using shielding and interlocking radiation-monitoring devices that prevent radiation levels from exceeding set points.

The C-AD designed shielding for accelerators and accelerator facilities to permit access by appropriately trained personnel to work in areas adjacent to the beam enclosures, even with nominal inadvertent beam-loss. In locations where the C-AD expects the losses, such as outside the shielding near collimators or beam stops, physical barriers such as fences control access and minimize exposures. Depending on the area classification, the C-AD may lock these barriers and/or post them as Controlled Area, Radiation Area or High Radiation Area.

There is the potential of significant residual activity inside the accelerator enclosures at several locations, such as targets areas, collimators, injection regions, and beam dumps and scrapers. To work near these locations, the C-AD may remotely move shielding into place using a crane or a fork truck, thereby minimizing the potential dose to workers within an accelerator enclosure.

4.19.2. Permanent Shielding and ALARA Dose

The C-AD uses shielding to reduce radiation levels in occupied areas to acceptable levels, and describes their shielding policy in Appendix 10 of an archival SAD.

The C-AD analyzed shielding designs for all sections of their facilities, and designed the facilities with ALARA in mind. The C-AD verifies the design and optimizes shielding, as

needed, to help achieve an ALARA dose to facility personnel and facility users. The C-AD conducts periodic radiation surveys of normal operations, as well as low-intensity simulated, credible beam faults for new portions of the facilities or experiments. These surveys assure and independently verify the adequacy of the shielding and access controls.

The C-AD planned the shielding such that during normal operations doses rate at accessible outside surfaces of a shield are less than 0.25-mrem/h when averaged over a year. This average value is a guideline based on the ALARA design objective of less than 500 mrem per year; viz., assuming 100% occupancy at the shield face, a 2000-hour per year residence time yields the ALARA design-objective of 500 mrem. This objective is one-half the design objective stated in 10CFR835 § 835.1002 (b).

Since there are many ways to control access and residence-time by area designation, training and signage and since there dose rate falls with distance from the shield face, significantly higher shield-face dose rates are often acceptable provided C-AD controls access controlled and plans work.

4.19.3. Permanent Shielding Materials

The permanent bulk shielding materials for the C-AD facilities are primarily materials used at all existing accelerator facilities. For example, concrete, iron, and earth provide protection for personnel outside the beam tunnels, target stations, and beam intersecting regions. In addition, to satisfy BNL's capping requirements, the C-AD installs caps on the earth berms that surround significant beam loss locations to prevent leaching of soil-activation products, tritium and sodium-22, from contaminating the groundwater. In addition, the C-AD uses paraffin, borated paraffin, polyethylene, borated polyethylene, and lead for local shielding and in special circumstances. C-AD controls configuration does not allow changes in the shielding without review and approval by the C-AD's RSC.

4.19.4.Radiation Detection and Radiation Interlocks

At locations external and/or adjacent to beam enclosures where unlikely but possible beam loss may occur, the C-AD installs fail-safe interlocking radiation-monitors. This technique is standard practice at the DOE's accelerator facilities to maintain radiological-area classification compliance by providing a robust, rapid beam-inhibit if any monitor exceeds a preset interlock limit. These radiation monitors are part of the QA1 ACS used for personnel protection.

The C-AD calibrates interlocking radiation monitors annually. Monitors, called Chipmunks, are tissue-equivalent ionization chambers that measure the dose-equivalent rate, in mrem per hour, from pulsed, mixed-field neutron- and gamma-radiation. Chipmunks as area-radiation monitors for personnel protection are located throughout the facility in accessible areas. They interlock the beams off should radiation-levels exceed the limits defined by the RSC. The operation of Chipmunks with interlocking capability is fail-safe. Loss of power results in beam off for interlocked Chipmunks, and/or an alarm in the Main Control Room (MCR) in Building 911. The C-AD operators occupy the MCR around-the-clock during operations. Additionally, the Chipmunk uses a built-in keep-alive radiation source to monitor for failures; failure to detect properly these built-in sources will trigger an alarm in the MCR and/or an interlock when appropriate.

The interlock system is an isolated hard-wired system. The C-AD uses relay logic and PLCs to activate or deactivate a device such as a beam stop or magnet's power-supply to prevent the beam from entering the fault area.

Fixed-location area-radiation monitors, such as Chipmunks, provide real-time dose information at various locations along the beam's path, and in the roadways, support areas, and experimental buildings that surround the accelerators. The C-AD logs the dose rate data every few minutes. FSS routinely reviews the data. The C-AD's RSC approves the locations of all radiation-monitoring instruments.

The C-AD uses other area monitors to assess the long-term integrated dose in areas accessible to the public and other individuals not wearing personnel dosimeters, mounting TLDs identical to those worn by radiation workers in these locations. The dose recorded by these TLDs is indicative of the exposure of a person spending full time at that location. The C-AD attaches area TLDs to bottle phantoms to simulate the shielding of the torso.

4.19.5.Control of Radioactive Materials and Sources

When the beam is off, the radiation hazard comes from activated material and sources. Activated material may be a direct radiation hazard, and may have removable contamination. The C-AD treats all known or potentially activated items as radioactive material, and handles them in accordance with BNL's Radiation Control Manual requirements. Workers place unlabeled radioactive material that is accessible to personnel in appropriately posted radiological- or radioactive-materials areas. RCTs survey suspect radioactive material before its release. The C-AD further controls materials based on the survey results, and uses process knowledge to certify that items removed from radiological areas are free of radioactivity. The C-AD packages radioactive items with removable contamination before moving them from posted radiological areas. Workers whose job assignment involves working with radioactive materials receive documented training as radiological workers. The C-AD controls sealed radioactive sources and handles them in accordance with the BNL's Radiation Control Manual, and the C-AD Operations Procedure Manual. The C-AD inventories and leak-tests every six months all regularly-used accountable sealed radioactive sources.

4.19.6. Portable Radiation Monitors

The C-AD only allows RCTs to use portable radiation-detection instruments to measure the radiation fields for radiation protection. These measurements establish and confirm area radiological postings. Instruments used are appropriate for the type and energy of the expected radiation, and C-AD assures calibration of instruments in accordance with these requirements.

4.19.7. Frisking Instruments

The RCTs conduct routine contamination-surveys to verify that contamination is not a problem. The C-AD uses instruments to frisk personnel exiting posted areas that might have removable contamination.

4.19.8. Personnel Dosimetry

All radiation workers wear appropriate TLDs and self-reading dosimeters as required by BNL's Radiation Control Manual while working in areas posted for radiation hazards. The C-AD regularly exchanges dosimeters for processing by a DOELAP-accredited laboratory. BNL maintains records of the doses recorded by these dosimeters; these records are available to the individuals monitored.

4.19.9. Access Controls Systems

The C-AD classifies the ACSs as QA level A1 according to the C-A QA plan, but the Department allows certain components to have a lower classification because failure is to a safe state, or critical parts are redundant. The C-AD Access Controls Group installs industrial-grade components only. They label parts that pass incoming tests as A1 or A2 and place the labeled parts in a controlled storage areas. The Group maintains documentation for these acceptance tests.

The basic design principles of the access control system are as follows:

- Either the beam is disabled, or the related security area is secured
- Only wires, switches, relays, PLCs and active fail-safe devices, such as Chipmunks, are used in the critical circuits of the system
- The PLC or relay-system is fail-safe
- Areas where radiation levels can be greater than 50 rem/h require redundancy in disabling the beam, and in securing the radiation area
- If a beam fails to be disabled as required by the state of its related security area, then the upstream beam would be disabled; that is, the system has backup or reach-back

Very High Radiation Areas are those areas that enclose primary beam. Very High Radiation Area hardware requirements comply with the BNL's Radiation Control Manual. The C-AD's RSC requires 1) locked gates with two independent interlock systems, 2) fail-safe and redundant radiation-monitors or other sensing devices, 3) indicators of status at the facility in the Main Control Room, 4) warning of status change, and, 5) emergency stop-devices within potential Very High Radiation Areas.

The RSC reviews interlock systems for compliance with requirements in the BNL Radiation Control Manual, SBMS requirements, and C-AD OPM procedures. A Representative of the BNL Radiological Controls Division is a member of the C-AD's RSC that defines the design objectives of the security system, and approves the logic diagrams for relay-based circuits and logic diagrams or state tables for PLC-based circuits. Cognizant engineers sign-off on wiring diagrams, and the C-A's Chief Electrical Engineer approves each diagram. The C-A Access Controls Group maintains design documentation.

The Access Controls Group conducts a complete functional check of all components of security system at an interval required by the BNL Radiological Control Manual. The Group checks the status of each door-switch on a gate, and each crash switch in the circuit. They check the interlocks, and the off-conditions for all security-related power-supplies to those magnets that may act as beam switches, and all security-related beam-stops. They check every component in a security circuit. As they test, they fill-out, initial, and date the security system test-sheets obtained from the C-AD's OPM. They maintain all test records as required by the C-AD OPM.

4.19.10. Control and Use of Hazardous Materials

BNL designed the Chemical Management System (CMS) to ensure that workers know about the chemical hazards in their workplace. The C-AD maintains the CMS to comply with OSHA- and EPA-regulations on hazardous-chemical communications. This program includes the provisions for policy, training, monitoring exposure limits, handling, storing, and for labeling, and equipment design, as they apply to hazardous materials. Included in the hazardous-material protection program are the procurement, usage, storing, inventory, and access to the hazardous materials, along with housekeeping and chemical-hygiene inspections of the C-AD facilities. All BNL's general employees receive appropriate general Hazard Communication training. BNL lists the requirements for general hazardous-materials communication and for special materials, such as beryllium, mercury, and biological materials in the SBMS; and C-AD folds these requirements into departmental procedures. BNL provides training on these requirements, and maintains records of the training program on the BNL BTMS. The C-AD ensures that staff and experimenters potentially exposed to hazardous chemicals receive appropriate job-specific training at the time of initial assignment, and whenever a new hazard is in the work area. The system of work controls at the C-AD requires enhanced work planning for work with certain hazardous materials, for example, beryllium, to assure that adequate hazard controls are in place, and completion of required training before work with hazardous materials begins.

The use of flammable liquids is minimal. For example, the anticipated use at the NSRL is less than one quart in each laboratory space as a solvent. Any use of flammable liquids follows BNL SBMS requirements.

4.19.11. Electrical Safety

BNL SBMS lists requirements for electrical safety. The C-AD covers electrical bus to reduce/prevent electrical hazards. In beam-enclosure areas, C-AD does not allow exposed conductors. The MCR operators ensure that all power supplies that power devices inside a beam enclosure are locked out before they allow entrants into it. In cases where workers are required to work on or near a specific device in an enclosure, they must apply their own lock-and-tag to the power supply or electrical disconnect for that specific device.

In some cases, the C-AD allows work near magnetic elements while powered, during which the Operations Coordinator maintains appropriate control over access. Work planning, Electrical Work Permits and training requirements for such entrants address concerns for inadvertent contact with powered conductors and exposure to magnetic fields.

4.19.12. Lockout/Tagout Program

C-AD has specific lockout/tagout procedures in the C-AD OPM that comply with OSHA and NFPA requirements. All workers train in lockout/tagout procedures at a level consistent with their position.

4.19.13. Safety Reviews and Committees

C-AD uses standing safety committees to review programmatic modifications and new programmatic equipment throughout their design, construction, commissioning, and operation to focus expertise on safety, environmental protection and pollution prevention. These committees and their reviews help maintain configuration control. Chapter 3 of this SAD details each committee's authority and responsibility.

4.19.14. Training

Worker training and qualification is an important part of the overall ESH plan for the C-AD; the C-AD OPM lists qualifications in appropriate procedures and the BNL BTMS keeps track of training records. All C-AD personnel and users require an appropriate level of training to ensure their familiarity with possible hazards and emergency conditions.

The C-AD trains workers in site-specific radiation safety, electrical safety, ODH and emergency response procedures at a level consistent with their positions. The C-AD assigns under a graded approach the number and type of training sessions commensurate with the worker's responsibilities and work-area hazards. They use the up-to-date record of worker training in the BTMS database to monitor workers' qualifications. The C-AD allows radiation worker access to qualified individuals only, except in emergencies. C-AD reviews C-AD specific training-procedures and C-AD specific course-documentation and updates these documents periodically.

4.19.15. Personal Protective Equipment

C-AD provides special clothing to protect workers exposed to electrical hazards and hazardous materials, including chemicals and radiation; a variety of types of clothing is on-hand to meet all expected hazards.

The C-AD provides respiratory protection to workers exposed to unacceptable levels of airborne hazardous materials, including chemicals, oxygen-deficient atmospheres, and radioactive materials. C-AD provides escape packs for ODH Class 1 areas. C-AD selects respiratory protection equipment per OSHA 29 CFR 1910.134 and BNL's SBMS requirements.

4.20. Significant Environmental Aspects and Impacts

In support of Brookhaven National Laboratory's broad mission of providing excellent science and advanced technology in a safe, environmentally responsible manner, the C-AD commits to excellence in environmental responsibility and safety in all operations.

To meet this commitment, the C-AD continuously reviews the environmental aspects of its operations to identify opportunities for, and accomplish waste minimization and pollution prevention. This process began in 1988 with the development of formal environmental design guides and a design-review process. More recently, C-AD further formalized the processes under the guidelines of ISO 14001. The environmental management system (EMS) emphasizes compliance, pollution prevention, and community outreach. The following environmental aspects are significant to C-AD activities:

- Regulated industrial waste

- Hazardous waste
- Radioactive waste
- Mixed waste
- Atmospheric discharges
- Liquid discharges
- Storage/use of chemicals or radioactive material
- Soil activation
- PCBs
- Environmental noise
- Water consumption
- Power consumption
- Sensitive/endangered species and sensitive habitats
- Historical contamination
- Material recycling

The BNL's environmental policy is the foundation on which C-AD manages significant environmental aspects and impacts. The EMS consists of the following elements, the details of which are given in the C-A Operations Procedure Manual:[175]

- Environmental policy
- Planning
- Environmental aspects and impacts
- System for determining legal and other requirements
- System for defining objectives, targets and programs
- Environmental management programs
- Implementation and operation
- Structure and responsibility
- Training, awareness, and competence
- Communication
- Environmental management system documentation
- Document control
- Operational control
- Emergency preparedness and response
- Checking and corrective action
- Monitoring and measurement
- Nonconformance and corrective and preventive action
- Records management
- Environmental management system audit
- Management review

The C-AD reviewed all waste streams and performed a process evaluation denoting all material inputs and outputs of materials and wastes for all their existing C-AD processes. The C-AD undertakes a process evaluation for each new, significant process before commissioning for operations.

[175] Environmental Management Program Description

4.21. Hazard Reduction Associated With Waste Generation and Handling

By minimizing pollution, the C-AD reduces hazards associated with handling, packaging, treating, and disposing of wastes generated during operation and modification of a facility. The C-AD approach to pollution prevention is to address it during the design- and construction-phase of projects. The C-AD tries to minimize or eliminate the anticipated costs associated with generating hazardous and mixed waste, as well as treating and disposing of wastes and the consuming resources in all the facility's life-cycle phases: construction, operation, closure, and decommissioning. Dollars spent during the design phases ensure significantly reduced total costs over the life of the facility, thus making more funds available for science.

4.22. Fire Detection, Egress, Suppression, and Response

The C-AD determined the basis of design for fire detection, egress, suppression, and response in individual fire hazard analyses (FHA) for each facility. C-AD keeps current FHAs on the C-AD Web. The C-AD facilities comply with the DOE's fire-protection guidelines, and with NFPA requirements for the most part; however, the C-AD identified Life-Safety Code compliance issues in older facilities built in the 1950s and 1960s before these requirements were in place. BNL is addressing these issues as time and funding permit.

The C-AD fire-detection/fire-protection systems integrate with the BNL site-wide system. The C-AD protections include automatic fire-detection, automatic suppression systems, and rapid-response capability coverage by the BNL Fire Department. C-AD installs sprinklers as required. Because of the low flammability of the magnets, power -and control-cables and the beam-diagnostic equipment in the tunnels and rings, they do not have automatic fire suppression systems, except for certain areas. They do have fire standpipes. The C-AD installed manual- and automatic-fire detection and alarm-initiation devices throughout the facility. Where needed, the C-AD added supplementary smoke and/or heat detection devices with pressure-sensitive sensors, flammable-gas detectors, or other advanced detection-devices such as high-sensitivity smoke detection, HSSD. The C-AD has portable fire extinguishers for manual firefighting efforts by trained staff. Fire alarms alert MCR and the BNL Fire Department, Building 599, and at BNL Police Headquarters, Building 50, thus providing continuous coverage for rapid fire-response. Roadways around the facility help protect it from surrounding wildfires. The building roofs are non-combustible metal, and do not ignite from burning ash from brush fires.

The means of egress for occupancies is in accordance with NFPA 101. Enclosure exhaust fans are located at tunnels and rings to remove smoke rapidly.

4.23. Routine Credible Failures

Beam losses in C-AD accelerators and experimental enclosures sufficiently attenuate ionizing radiation in the bulk shielding for expected routine operation. Shielding meets requirements for permissible exposure to radiation workers, non-radiation-trained workers and members of the public during normal machine operations. Present shielding designs reduce all normal radiation levels to well below the DOE's ALARA guidelines.

Exposure to nearby facilities is less than 25 mrem per year and only a small fraction of 5 mrem per year at the site boundary, which are the Laboratory's guidelines for radiation exposure

for nearby facilities, and the site boundary, respectively. The C-AD reduces radiation exposure to maintenance workers through designing equipment to simplify maintenance, and by selecting materials to minimize failures. In particular, equipment at high loss-points such as targets, beam dumps, collimators, beam injection- and beam extraction-points receive detailed examination to assure that C-AD keeps workers' radiation exposure as low as reasonably achievable.

There are no significant quantities of dispersible gaseous or liquid radioactive materials, except for the radioactivity induced in cooling water. In the primary beam-line areas where the cooling water might escape confinement, e.g., a hose break, water detection mats underneath the magnets alarm and alert the Watch personnel. The C-AD trains them to confine, clean up, and report water spills to management. Experience indicates that up to several hundred gallons may leak onto the impermeable concrete floor. The C-AD samples spilled-water before releasing it to a waste stream, or allows it to evaporate in place. There are no off-site threats to the public.

4.24. MCIs, Credited Controls and Credited Control Supports

This section describes the bounding analysis scenarios for credible C-A facility incidents, and the associated Credited Controls and Credited Control Supports to prevent such incidents.

4.24.1. MCI for Beam Fault Incidents and Credited Controls

Not all protons stop at the targets or at well-defined loss locations; some may be lost during transport. The C-AD meets its design goal of no more than 20 mrem per full-fault event in an uncontrolled area by employing proper shielding, radiation monitoring and interlocking systems.

Based on archival operating records, beam faults occur when magnet power fails, when beam tunes fail, or when mis-aligned beam-line components enter the beam path. Operators in the Main Control Room detect the problem immediately upon radiation- alarm trips, and from the resultant interlocks that turn the beam off. Operators investigate these events according to written procedures, correct the problem if appropriate, record the event for management's review, or discontinue operations if appropriate. Since these events run a few seconds or less, and their frequency is only several times during an annual running period, the off-site radiation impact is negligible.

Experience at C-AD shows that using 1) thick shielding, 2) fences and barriers at the berm and other areas, 3) ALARA beam-tuning procedures, 4) radiation alarms in MCR and procedures that call for response to radiation alarms, sufficiently protect personnel in locations not directly monitored by radiation monitors.

Based on the system for formal design review by C-AD Committees, the formal BNL and C-AD training programs, the formal C-AD operations procedures, the formal C-AD quality assurance programs for equipment, and the extensive use of shielding and access controls, the C-AD considers the probability of a "catastrophic" radiation exposure extremely improbable. That is, the probability for this consequence is indistinguishable from zero.

Employing radiation area monitors and interlocks maintains worker exposures well within the limits established by the DOE. The C-AD considers as remote the probability of a significant inadvertent radiation exposure, and not likely to occur within the life cycle of the C-AD facilities. The C-AD controls routine maintenance and operations; they do not exceed the DOE's annual radiation limits. The RHIC Beam Loss Scenario assumes that an uncontrolled loss

of a beam at full energy is possible at a location other than at the intended loss point, the Beam Stops at 10 o'clock. For a bounding Collider fault with the ASE-limited intensity proton beam, the C-AD assumes that for most locations in each ring, half the beam, viz., the equivalent of 1.14×10^{13} 250 GeV protons, is lost at a point, and the other half distributed over an extended length of magnets. The entire beam could be lost at an aperture-defining location, including the high β quadruples. At the superconducting Tevatron at Fermi National Laboratory, the entire full-energy beam was lost twice in approximately 10 years of running, but both times, the loss distributed over a long portion of the machine. The maximum credible loss defined here therefore is conservative. The C-AD estimates the maximum dose from a bounding fault to an individual standing at a typical location on the berm at several hundred mrem. The C-AD designates the RHIC berm area and roadway as Controlled Areas during RHIC operations. They could not treat this area as uncontrolled because the entire stored beam in the Collider is lost instantly, and the weight of additional shielding over RHIC tunnel is limited and does not reduce the dose below 100 mrem. Stevens estimated uncertainties in calculating the dose potential through a series of fault studies.[176] The C-AD believes the maximum credible Collider fault has no adverse impact on the public since the area is a Controlled Area. Similar analyses shows the same type of credible incident for other accelerators at C-AD, although, the RHIC beam loss is the MCI.

Thus, the beam limits energy and number of particles in RHIC, the beam power in other accelerators, and the operability of the ACSs during beam operations are Credited Controls. The following are Credited Control Supports for the radiation hazard:

- Shielding in place
- Functionality of the ACSs to prevent access and to remove beam
- Configuration control of interlocking radiation monitors
- Use of calibrated radiation monitors in the ACS
- A system to prevent the high intensity H^- source from transporting beam to RHIC
- Functional testing of the ACSs
- Visual inspection of shielding and soil caps prior to operations

4.24.2.MCI for Fire Incident and Credited Controls

The objectives of presenting no threats to the public health and welfare or undue hazards to life from fire are satisfied. The designs of all C-AD facilities comply with the "Life Safety Code" (NFPA 101) and with the specific requirements of the Occupational Safety and Health Standards (CFR29, Part 1910) applicable to exits and fire protection.

The C-AD uses flammable/explosive gases according to NFPA codes and standards applicable to experimental installations. Gases are stored in compressed gas- cylinders that meet the DOT's specifications. The C-AD prohibits large quantities of gas in experimental areas. There are no off-site threats to the public should a cylinder fail.

The C-AD designed experiments with an "improved risk" level of fire protection, fitting them with fire detectors and fire protection systems where appropriate. Combustible loading of the primary beam lines consists of magnets, power cables, control cables and beam diagnostic equipment. None of the materials are highly flammable, and with the possible exception of

[176] A. J. Stevens, C-AD/ES&F Technical Note No. 156, Summary of Fault Study Results at RHIC, July 12, 2000

legacy cables that are being removed, all are expected to self extinguish upon de-energizing of electric power. Induced radioactivity deeply entrains in magnets and concrete shielding, and is not dispersible in a fire. There are no off-site threats to the public from a fire.

The personnel risks associated with the fire hazard are acceptable considering the type of building construction, the available exits, the fire- detection systems, the fire- alarm systems, and the relative fire-safety of the components and wiring. Emergency power and lighting is available in accordance with fire industry standards.

The DOE established limits of $1,000,000 for a Maximum Possible Loss and $250,000 for a Maximum Credible Loss, mandating the installation of automatic suppression-systems. The C-AD facility's designs meet these criteria.

Distances to exits in the C-AD facilities do not present a problem. The C-AD provides engineered venting for smoke and heat or by building configuration to ensure that smoke does not overtake personnel before they have time to reach exits. Because it may take time in the large RHIC tunnel to find a source of fire or smoke, the C-AD established a Credited Control to exhaust smoke when the tunnel has occupants. For a Credited Control Support, C-AD may allow personnel to occupy the RHIC tunnel enclosure if they can manually activate the exhaust fans.

Because the volume of flammable gas at STAR and PHENIX is much larger than at a standard industrial facility, the C-AD established a Credited Control that requires flammable gas detection in the Intersecting Regions for STAR and PHENIX be operational during running periods with flammable gases in experimental detectors.

4.24.3.MCI for Electrical Incident and Credited Control Support

The electrical systems and equipment have been in use at C-A facilities for many years. This statement does not minimize the inherent dangers; rather, it indicates that the technical personnel are experienced on with circuits and devices. Additionally, they are qualified to work on these systems. The C-AD ensures adequate training and PPE for very engineer, technician, and electrician expected to work on the facility's equipment. The training includes an awareness of potential hazards and knowledge of appropriate safety procedures and emergency response plans. Training is documented, and a list of authorized personnel is kept on a network electronic database (BTMS) and available to supervisors.

The C-AD's workers are familiar with the types of electrical hazards related to the accelerators and experimental areas. The C-AD installs all reasonable safety features in, and on the electrical equipment. The groups that maintain, repair, test, and operate the equipment have the knowledge, tools, and experience to perform safely. The C-AD does work planning, including electrical safety procedures, working hot permits, and job-safety analyses, to help workers adhere to the safe practices mandated by OSHA and BNL. Periodic retraining improves the safety margin. The C-AD considers the potential risk for a serious electrical shock at a level currently accepted throughout industry and no Credited Controls were required.

Since an arc in the superconducting circuit for RHIC magnets can cause damage to nearby cryogenic piping that may result in an uncontrolled release of helium, C-AD uses a Credited Control Support to limit the frequency of that initiating event when the tunnel has occupants. Thus, individuals may enter the RHIC tunnel when the helium temperature in magnets is below 40 K as long as the RHIC magnet main power supplies are limited to supply a current $\leq$530 amperes. C -AD accomplishes this restriction by enabling the over-current trip circuitry, or by locking out the power supplies.

4.24.4.MCI for ODH Incident and Credited Controls

Following a review of the magnet failures at CERN's LHC in September 2008 in which an electrical arc produced a hole in the cryogenic piping, the C-AD began to review the potential of this type of event at the RHIC. Like CERN, the RHIC cools its magnet system with LHe and the cryogenic piping is proximate to a superconductor that may have about 100 MJ of magnetic-field energy, energy that under the right conditions can transform into an electrical arc and damage the piping. Revisiting this postulated accident, C-AD found the original calculation of He release rate used as input for the ODH analysis at the RHIC underestimated the He release rate and the total release. Unlike CERN in 2008, C-AD uses many voltage taps to ensure electric current safely leaves the superconductor should a voltage develop, at the milli-volt level, in the superconducting circuit. C-AD determined that the RHIC voltage-tap system reduced the likelihood of a CERN-like incident at RHIC.

The original assumption was that the LHe in a single sextant's magnet loop instantaneously released into the magnet string's sextant vacuum vessel, a non-mechanistic assumption used to simplify the calculation. A constant density heat-up of the He in the vacuum vessel then occurs, and within about 50 seconds, the vacuum-vessel's pressure reaches the relief valves set point of ~1.3 atm. Once the He release from the vacuum vessel began, the process was a constant pressure expansion of the He in the vacuum vessel with the excess He being relieved into the RHIC tunnel, causing the ODH situation. The maximum He release-rate into the tunnel under these original assumptions was ~12.5 Kg/s.

While reviewing the LHC accident, the engineer familiar with the original calculation for RHIC tunnel recognized that limiting the total LHe mass to a single sextant magnet line was a non-conservative assumption. Because the entire magnet string in a RHIC ring is connected, the LHe inventory of the entire ring is available to leak out of a magnet-line break into the affected sextant vacuum vessel, not just the LHe inventory of the affected sextant. Correcting this analytical assumption error gave a significantly larger He inventory, and He vent rates into the RHIC tunnel that are up to twice the originally computed rates. The ODH analyses showed that the RHIC tunnel's ODH classification was ODH 1 under these conditions instead of ODH 0.

A more realistic model of the release of the LHe into the affected sextant vacuum vessel takes credit for the flow resistance from system piping on the escaping LHe from the failed magnet line. The vacuum vessel does not immediately fill with the leaked He; it fills at a rate controlled by the system's flow resistances. However, the updated assumptions and calculations show the oxygen-deficiency potential for the RHIC tunnel at less than 40 K is ODH 1. The C-AD requires training, PPE, and Personal ODH monitors for work in the RHIC Ring tunnel when the magnet system is less than 40 K.

Thus, the requirement for engineered systems (ODH alarms and interlocks to ventilation fans) to be in place in the RHIC tunnel and support buildings is a Credited Control. The operability of ODH exhaust fans, the operability of ODH interlocks and alarms, the requirements for entrants to carry 5-minute escape packs, the annual calibration of ODH sensors and the annual testing of fans and louvers are Credited Control Supports.

4.24.5.MCI for Dispersible Radioactive Materials and Credited Controls

This postulated accident shows the potential consequences at the BNL site-boundary of a release of all volatile radionuclides from a set of irradiated BLIP targets, two RbCl, and one

Ga/Nb. The C-AD assumed an outdoor ground-level release since release inside B931 or B801 would result in lower site-boundary doses. Indoor releases would be through an elevated stack after HEPA- and charcoal-filters, and after the plating out of the volatiles on the surfaces of the building and ductwork. C-AD determined the consequences of release from multiple target sets during transport by multiplying results from a single target set by the number of target sets.

The C-AD developed models of the site boundary's ground- and stack-release-atmospheric dispersion models for all accident analyses from the BLIP and the RRPL.[177] For this case, the C-AD assumed the ground-level release occurs near BLIP because it is closest to the BNL's site boundary. The DOE's Order on Accelerator Safety specifies that if the site boundary dose is less than 1 rem, the DOE field office is authorized to approve the ASE.

The calculation conservatively assumes a 5% ground-level meteorological dispersion coefficient of 1.4×10^{-4} sec/m^3 and 100% of volatile radionuclides released.[178] The result for the site boundary dose is ~3 µrem per target set after the routine 7-day delay from end of irradiation to start of transport. Even assuming no delay from end of irradiation to initiation of target transport, the dose at the site boundary would be less than 80 µrem per target set. Thus, the consequences are extremely small and much less than 1 rem.

The C-AD judges the likelihood of an accident that causes dose to workers from release of targets during shipment between B931 and B801 as less than 10^{-4} per year. The consequences although high, would not be life threatening. A potential credible accident would likely result in a worker dose of less than 5 rem. The majority of this dose would be from direct radiation from the irradiated targets with minor dose-contribution from immersion in a cloud of radioactive gases, and inhalation of the volatile radionuclides. Thus, the C-AD determined that Credited Controls were not required for transport of BLIP Targets.

Airborne radioactive emissions must meet federal requirements and be less than 10-mrem/y to an offsite individual. C-AD established a Credited Control to meet this requirement during beam operations at BLIP. Thus during BLIP beam operations, C-AD must perform continuous monitoring for radioactive airborne emissions (e.g., particulate, tritium and short-lived gaseous activity) that are anticipated to exceed 0.1 mrem per year to the EPA-defined Maximally Exposed Individual.

Since airborne radioactive material can disperse into work areas at the BLIP and at the TPL if the ventilation systems are inoperable or inadequate, C-AD established Credited Controls for these emissions. Thus at BLIP and during BLIP beam operations, the tank-hotbox exhaust-ventilation-system must be operable. At the TPL and during processing of radioactive materials, the TPL hot cells, hot boxes, radioactive fume hood and their associated ductwork must have negative pressure between these facilities and the room and outdoors. Credited Control Supports at TPL and BLIP include the following:

- RSC reviews changes to BLIP beam characteristics and BLIP targets
- TPL and BLIP shielding in place during operations
- Operable beam radiation monitor and target tank low-water level interlocks during beam operations at BLIP

---

[177] R. Karol, B801 Site Boundary Ground level Atmospheric Dispersion Model, October 28, 2010; R. Karol, B801 Stack Release Site Boundary Atmospheric Dispersion Model, October, 29, 2010; R. Karol, BLIP Site Boundary Ground level Atmospheric Dispersion Model, November 19, 2010; R. Karol, BLIP Stack Release Site Boundary Atmospheric Dispersion Model, November 4, 2010

[178] R. Karol, BLIP Target Transportation Accident – Site Boundary Dose Calculation, January 3, 2011, Revised June 9, 2011

- Operable low-flow ventilation system alarm at BLIP during operations
- At least two operable building exhaust fans during processing operations at TPL
- Two operable exhaust fans in the TPL hotboxes and hot cells during processing
- One operable exhaust for the TPL fume hood during processing operations

C-AD may disperse radioactive material into groundwater by allowing rainwater to percolating through activated soil. Thus, C-AD has a Credited Control Support to install caps over soil to protect groundwater if C-AD determines the annual activity concentration of sodium-22 in leachate might exceed 25% or tritium in leachate might exceed 5% of the Drinking Water Standard. C-AD employs an additional Credited Control Support to perform at least one and in some cases two visual inspections of caps each year to ensure that they are in place and functional.

4.25. Risk Assessment to Workers, the Public, and the Environment

4.25.1.Radiation Risks

The routine radiation dose to workers is well below the DOE's regulatory limits of 10 CFR 835. Experience shows the average exposure of C-AD's radiation workers was about 30 mrem per year in the 1990, and much less than that after 2004. The last year for the high-intensity, high-energy fixed target program was 2002 in Building 912 and 2004 for g-2, and dose to individuals and collective dose significantly dropped when running only the nuclear physics- and NSRL-programs. The risk to a C-AD radiation worker is small, and much less than that allowed by the dose limits. Figure 4.25.1 illustrates the decline in collective dose at C-AD. The risks to the public are an extremely small fraction of workers' risk.

Worker doses, even including the maximum credible beam-fault dose on a frequent basis, would not cause deterministic effects, such as burns or tissue damage unless an individual were in the beam enclosure during operations. The ACS, a Credited Control, assures that such irradiations are not credible.

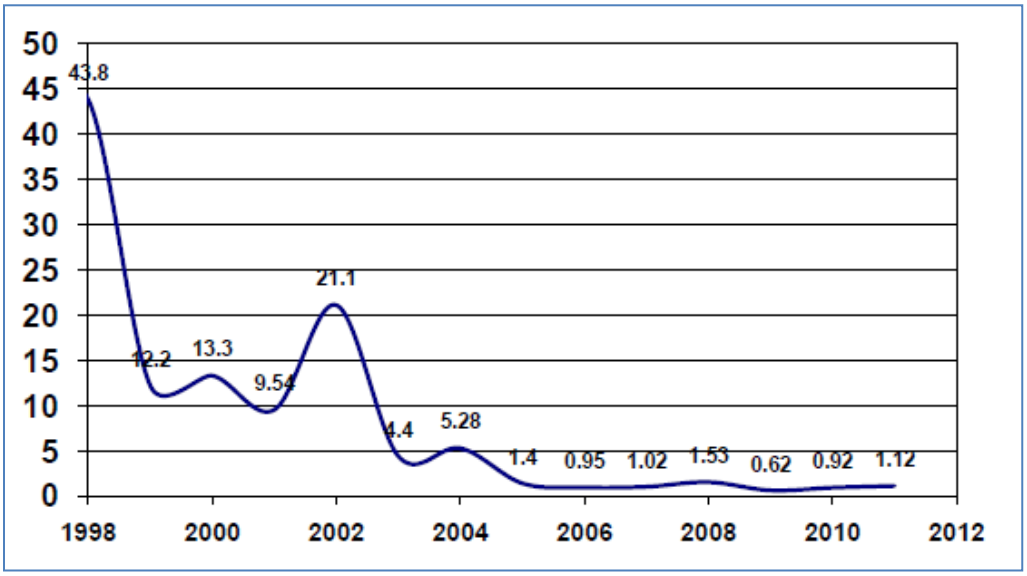

Figure 4.25.1 Decline in Radiation Worker Collective Dose (Person-Rem)

4.25.2.Infectious Microorganism Risks

These risks are present at the NSRL. Biological safety cabinets (BSCs) are the primary means of containment developed for working safely with infectious microorganisms. This equipment, located in cell rooms C1 and C2 of the Support Laboratories in Building 958, is appropriate for any work done with human-derived blood, body fluids, or tissues where the presence of an infectious agent may be unknown. Class II Type A BSCs protect personnel, the environment, and product. Airflow draws from the operator into the front grille of the cabinet, affording personnel protection. In addition, the downward laminar flow of HEPA-filtered air protects samples by minimizing the chance of cross-contamination along the cabinet's work surface. Because the cabinet's air exhaust passes through a certified exhaust HEPA filter, it is contaminant-free, and may be re-circulated back into the laboratory, i.e., the type of BSC employed at NSRL's cell rooms. CDC standards for BSC testing require an annual test, which includes annual efficiency tests, a smoke test, and air-velocity test. The BSC must maintain a minimum calculated or measured average inflow velocity of at least 75 linear feet per minute at the cabinet's face opening.

4.25.3.Environmental Risks from Radiation

The only credible risk to the environment is groundwater contamination with tritium. A spill of radioactive cooling water from a failed pipe or hose or an activated soil cap failure that would allow rainwater to leach the contamination into the aquifer, causes groundwater contamination with tritium.

The C-AD instituted an extensive groundwater-monitoring program to verify the effectiveness of soil caps and soil-cap maintenance. BNL verifies groundwater quality down gradient of actual or potential soil activation areas by periodic sampling of groundwater-surveillance wells. BNL tests groundwater samples for tritium and sodium-22 to verify that the soil caps effectively prevent rainwater infiltrating activated soil shielding. BNL evaluates the detection of unexpected levels of tritium and/or sodium-22 in groundwater in accordance with the BNL Groundwater Protection Contingency Plan.

The C-AD's operating procedures, periodic sampling of onsite drinking water for tritium, extensive groundwater monitoring and the long delay times from spill to the location of an onsite or offsite well preclude the possibility of any worker or member of the public from drinking radioactive groundwater.

4.25.4.Environmental Risks from Biological Materials

There is no credible risk to the environment from airborne releases from the NSRL animal rooms (A1 and A2) in the Support Laboratory, which are Biosafety Level 2. The NSRL animal laboratories have HEPA filters installed in the room exhaust and in the room re-circulation lines. The C-AD tests the efficiency of the HEPA filter annually.

From a regulatory standpoint, ventilation and exhaust systems for laboratory operations; i.e., lab hoods, are exempt from New York State emission source permitting- requirements.

4.25.5.Fire Risks

Based on the extensive use of fire protection, the appropriate location of exits and the use of emergency ventilation-exhaust systems, high- or medium-consequence levels are extremely unlikely. Thus, the fire risk is acceptable.

The C-AD documents the maximum credible fire loss in each C-AD facility in the Fire Hazards Analysis (FHA) for each facility.

4.25.6.Electrical Risks

Based on the use of formal C-AD electrical safety procedures, use of PPE, working hot permits and job safety analyses, high or medium consequence levels are extremely unlikely. Thus, the risk is acceptable.

4.25.7.Injury Risks

4.25.8.

Based on the use of formal occupational safety management programs such as ISM and OHSAS 14001, the risk of injury is low. There is about 550 C-AD / BNL employees assigned each year at C-AD and about 1100 users at the experimental areas. Experience shows the average risk of injury to the workers at C-AD has been declining for decades and is consistent with, or below the DOE-wide averages for research, services, or production operations, as shown in Figure 4.25.7.

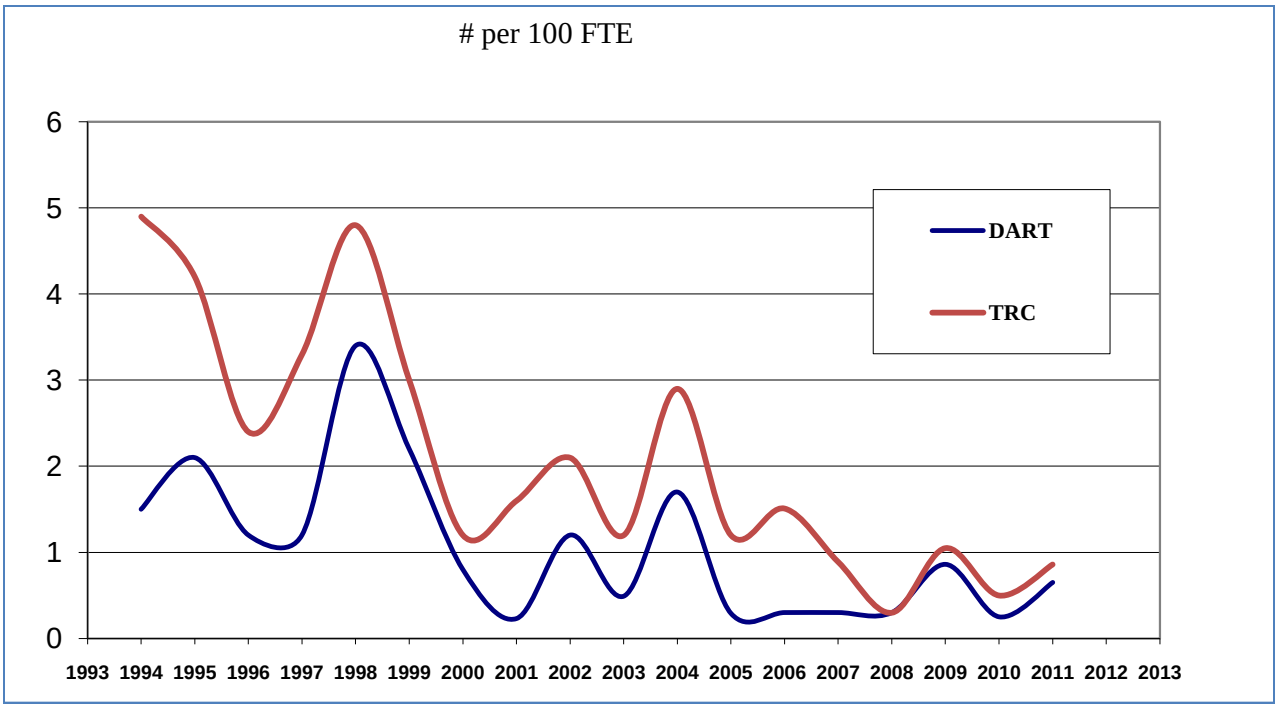

Figure 4.25.7 Annual DART and TRC Rates at C-AD

4.26. Professional Judgment Issues

The C-AD initially screened their accelerator- and experimental-facility's hazards using qualitative engineering judgment. The C-AD's engineering-, operating-, and safety-staff has many years of experience with BNL accelerators and experiments. This experience influenced the hazard analyses of Appendix 1.

Experience also influenced the choice of conservative maximum hourly routine and faulted beam-energy limits used as the bases for the shielding, and ALARA safety analyses. The C-AD verifies these judgment issues through independent beam-fault studies.

4.27. Methods Used in Evaluation of Radiological Hazards

Techniques employed in the evaluating radiological hazards include using empirical formulae,[179,180,181] and the Monte Carlo Programs MCNPX[182] and CASIM.[183] The C-AD has used CASIM satisfactorily for many years at energies above 10 GeV, and has extensively compared it to MCNPX at energies above 2 GeV.[184] The C-AD does not use CASIM directly for low-energy neutron transport. It overestimates neutron flux in the very forward direction.[185] The MCNPX probably is the most widely used neutron-transport Monte Carlo code. Several MCNPX calculations showed excellent agreement with empirical labyrinth formula.[186]

Past measurements made at the C-AD accelerators at approximately 90 degrees to the beam paths show that dose equivalent and activation calculations are overestimates. C-AD regards these calculations as upper limits.[187]

The MARS code system is a set of Monte Carlo programs for simulating three-dimensional hadronic and electromagnetic cascades, and the transport of particles through matter, for particles with energies ranging from a fraction of an electron volt to 100 TeV. The C-AD expects to use this code more often in the future because it includes magnetic- and electric-field effects on the cascade process. The code is available for the UNIX and Linux operating systems, and is available through its developers at Fermi National Accelerator Laboratory.[188]

---

[179] K. Tesch and H. Dinter, "Estimation of Radiation Fields at High Energy Proton Accelerators," Radiation Protection Dosimetry, Vol. 15 No. 2 pp. 89-107 (1986)

[180] C. Distenfeld and R. Colvett, "Skyshine Considerations for Accelerator Shielding Design," Nucl. Sci. Eng. Vol. 26, p. 117 (1966)

[181] A. H. Sullivan, A Guide to Radiation and Radioactivity Levels Near High Energy Particle Accelerators, Nuclear Technology Publishing, Kent, England, 1992

[182] L. S. Waters, Ed., "MCNPX USER'S MANUAL," LANL Report TPO-E83-UG-X-0001, (1999). See also H.G. Hughes, R.E. Prael, R.C. Little, "MCNPX – The LAHET/MCNP Code Merger," X-Division Research Note, 4/22/97. The version number of the code used in this note is 2.1.5

[183] A. Van Ginneken, "CASIM; Program to Simulate Hadron Cascades in Bulk Matter," Fermilab FN-272 (1975)

[184] A. J. Stevens, "N-Shield, Description," BNL C-A Dept. ES&F Division Note 157 (2000)

[185] See above reference. The CASIM estimates of soil activation in the dump region are in fact over-estimates. Conversely, CASIM dramatically underestimates neutron flux in the backwards direction, but no such estimates exist in the NSRL geometry.

[186] K. Goebel, G.R. Stevenson, J.T. Routi, and H.G. Vogt, "Evaluating Dose Rates Due to Neutron Leakage Through Access Tunnels of the SPS," CERN LABII-RA/Note/75-10 (1975)

[187] A.J. Stevens, "Summary of Fault Studies at RHIC" BNL C-A Dept ES&F Note 156 (2000)

[188] The official MARS Web site is http://www-ap.fnal.gov/MARS/, and links there point to many recent applications of the code

In estimating the degree of radiation risk, shielding design assumes the routine- and maximum-operating beam for each portion of the facility. The design mitigates the greatest radiation hazards, i.e., high-intensity unpolarized protons. Thus, the shield is more than adequate to protect against the loss of polarized protons or heavy ions because their intensity and/or individual nucleon energies comparatively are much less.

Radiation levels from routine loss of flux were estimated for locations around the C-A complex using Monte Carlo codes or simple analytical formulas[189,190,191,192,193] given in texts, monograms, or reports. These codes approach the solution as a succession of individual processes, rather than in terms of global physical-quantities. Making a mathematical experiment that is equivalent to the real physical situation simulates the cascade. The code tracks particles in the cascade from interaction to interaction. The events may be, for example, elastic- or Coulomb-scattering events, inelastic nuclear events in which any variety of secondary particles arise, and absorption followed by decay. The processes and particle production are randomly selected using appropriate probability distributions, either known or well approximated. At any point in the Monte Carlo simulation, any required macroscopic physical quantity may be scored (i.e., energy, fluence, absorbed dose, equivalent dose, stars). A shielding physicist obtains the expected value of each parameter, to the required statistical accuracy, after a sufficient history of events.

For many areas at the C-AD, physicists have studied the radiation levels extensively with the beam faulted in a controlled fashion. The C-AD uses these measured doses and dose rates as well as the calculations.

[189] A. H. Sullivan, A Guide to Radiation and Radioactivity Levels Near High Energy Particle Accelerators, Nuclear Technology Publishing, Ashford, Kent, England, 1992

[190] NCRP Report No. 144, Radiation Protection for Particle Accelerator Facilities, December 31, 2003

[191] NCRP Report No. 51, Radiation Protection Guidelines for 0.1 – 100 MeV Particle Accelerator Facilities, March 1, 1977

[192] IAEA Technical Reports Series No. 283, Radiological Safety Aspects of the Operations of Proton Accelerators, Vienna, 1988

[193] IAEA Technical Reports Series No. 188, Radiological Safety Aspects of the Operation of Electron Linear Accelerators, Vienna, 1979

5.Chapter Five, Accelerator Safety Envelope (ASE)

Table of Contents

5. Chapter Five, Accelerator Safety Envelope (ASE)....1
5.1. Background 2
5.2. Credible Incident Criteria....3
5.3. C-AD's Policy for Selecting Credited Controls 4
5.4. C-AD Criteria for Determining Credited Controls....6
5.5. Selecting Credited Controls....10
5.6. The ASE and Credited Controls 11
5.7. The Bases of Credited Controls for Operations at the AGS, EBIS, Linac, and Booster....12
5.7.1. Credited Controls for Maximum Credible Incidents - ASE Limits 12
5.7.2. Credited Controls for Radiation Hazards Due to Access....13
5.7.3. Credited Controls for Oxygen-Deficiency Hazard 13
5.7.4. Credited Control Supports to Protect Against Radiation....14
5.7.5. Credited Control Support to Protect Against an ODH....15
5.7.6. Calibration, Testing, Maintenance, and Inspections that Support Credited Controls....15
5.7.7. Administrative Controls....17
5.8. The Bases for Credited Controls for Operating the Energy Recovery Linac (ERL)....19
5.8.1. Credited Controls for Maximum Credible Incidents - ASE Limits 19
5.8.2. Credited Controls for Radiation Hazards Due to Access....20
5.8.3. Credited Controls for Oxygen-Deficiency Hazard 20
5.8.4. Credited Control Supports to Protect Against Radiation....20
5.8.5. Credited Control Supports to Protect Against an ODH 21
5.8.6. Calibration, Testing, Maintenance, and Inspections that Support Credited Controls....22
5.8.7. Administrative Controls....22
5.9. The Bases for Credited Controls for RHIC Operations 24
5.9.1. Credited Controls for Maximum Credible Incidents - ASE Limits 24
5.9.2. Credited Controls for Radiation Hazards Due to Access....24
5.9.3. Credited Controls for Oxygen-Deficiency Hazard 24
5.9.4. Credited Controls for Fire Hazard 25
5.9.5. Credited Control Supports to Protect Against Radiation....25
5.9.6. Credited Control Supports to Protect Against an ODH 27
5.9.7. Credited Control Supports to Protect Against Smoke Inhalation in the RHIC Tunnel .30
5.9.8. Credited Control Supports to Protect against Flammable Gas Hazards at STAR 31
5.9.9. Credited Control Supports to Protect against Flammable Gas Hazards at PHENIX....32
5.9.10. Calibration, Testing, Maintenance, and Inspections that Support Credited Controls..34
5.9.11. Administrative Controls....36
5.10. The Bases for Credited Controls for operating the TVDG and TtB 38
5.10.1. Credited Controls for Maximum Credible Incidents - ASE Limits 38
5.10.2. Credited Controls for Radiation Hazards Due to Access....39
5.10.3. Credited Controls for Oxygen-Deficiency Hazard 39
5.10.4. Credited Control Supports to Protect Against Radiation....39
5.10.5. Credited Control Supports to Protect Against an ODH 40

5.10.6. Calibration, Testing, Maintenance, and Inspections that Support Credited Controls..41
5.10.7. Administrative Controls.....42
5.11. The Bases for Credited Controls for the BLIP- and RRPL-Operations.....44
5.11.1. Credited Controls for Maximum Credible Incidents - ASE Limits.....44
5.11.2. Credited Controls for Radiation Hazards Due to Emissions 45
5.11.3. Credited Control Supports to Protect Against Radiation Due to Access.....45
5.11.4. Credited Control Supports to Protect Against Radiation.....45
5.11.5. Calibration, Testing, Maintenance, and Inspections that Support Credited Controls..48
5.11.6. Administrative Controls.....49
5.12. The Bases for Credited Controls for NSRL Operations.....50
5.12.1. Credited Controls for Maximum Credible Incidents - ASE Limits.....50
5.12.2. Credited Control for Radiation Hazards Due to Access 51
5.12.3. Credited Control Supports to Protect Against Radiation.....51
5.12.4. Calibration, Testing, Maintenance, and Inspections that Support Credited Controls..51
5.12.5. Administrative Controls.....52
5.13. Reference Documents for the Bases for Credited Controls 53

Index of Tables

Table 5.4.a C-AD Template for Consequence, Frequency, Risk, and Control 8
Table 5.4.b Example of Consequences, and Minimum Number of Credited Controls.....9

5.1.Background

The SAD adequately details all significant hazards from the C-AD accelerators and accelerator facilities and their operations, and the controls for managing these hazards to assure an acceptable level of risk. The SAD addresses the design, construction, maintenance, operation, and post-operations of C-AD accelerators and accelerator facilities. It describes the hazard controls and provides a direct connection to the Credited Controls in the Accelerator Safety Envelope (ASE).

The C-AD deems the Credited Controls essential to safety. In the ASE, the C-AD identifies the requirements for operability, testing, and surveillance of Credited Controls, as needed, to ensure they reliably perform their designated safety-function. C-AD audits the Credited Controls in its assessment programs.

The following lists the overall process followed in designating Credited Controls for inclusion in the ASE:

- Identify the hazards present at the facility, and determine if they need further analysis
- Distinguish the maximum credible incidents (MCIs) caused by these hazards
    - Ascertain the initiating event and its likelihood
    - Delineate methods of detecting the event
    - Recognize the hazards from the initiating event
    - Assess the consequences and risk from the event
    - Determine engineered and administrative features that reduce risk to acceptable levels
    - Determine need for Credited Controls to ensure actual consequences and risk are bounded by the analysis

- Select the Credited Controls
- Protect the Credited Controls
- Manage the Credited Controls' operability and specify surveillance requirements via the ASE

The ASE formally establishes Credited Controls and the limits on operations within which the C-AD operates the accelerator facilities. It ensures that the Credited Controls are reliably in place.

The C-AD requires adherence to the DOE's approved requirements stated in the ASE, viz., one of the required documents for an accelerator's authorization bases for commissioning and routine operations. This chapter offers an overview of the development of the Credited Controls in the ASE. Adhering to the requirements of BNL's Accelerator Safety Subject Area, the C-AD submits the ASE to the Laboratory's ESH Committee for review. The DOE BHSO approves the ASE, and sanctions all changes to a previously approved ASE.

5.2. Credible Incident Criteria

The process driving the determination of Credited Controls evaluated the following:

- Internal events
  - These include credible internally initiated operational accidents, such as process upsets, beam misalignments, spills, equipment failures, fires, and inert-gas releases. In evaluating all types of scenarios, the C-AD based their determinations of credible internal events on consensus and on decades of operational experience, while excluding as not credible easily justified internal events based on physics or other bounding logic. Examples of initiators of credible internal events are happenings resulting from equipment failures and human errors.
- Natural phenomena
  - These encompass seismic events, extreme wind, hurricanes, and flooding. The C-AD considered these events against applicable building codes under which BNL constructed its infrastructure, and found construction to be consistent with the requirements in the DOE's STD-1020-2002.
- External events initiated by humans
  - These include explosions or vehicular crashes that either cause releases or have a major impact on the facility's operations. The frequency for their credibility was an event with a frequency greater than once every 10,000 years.

The safety analyses considered the consequences to workers inside the accelerator or the accelerator facility. The C-AD assumed the public was immediately outside BNL's site boundary. The approach used to evaluate the potential impacts to persons within the boundary depended on the hazard involved, and the individuals' locations. To assure the proper controls, the C-AD's analyses covered all credible locations for workers and non-workers, including appropriate occupancy. The C-AD adopted an informed approach to selecting the Credited Controls that combined expert opinion, and cautious assumptions and calculations to generate a conservative understanding of the risk.

The C-AD facilities are located within a large multi-purpose laboratory site. The C-AD assumed an orthodox evaluation of the closest location where the postulated event could affect a member of another facility, another onsite individual, or a C-AD worker. For a loss of beam event, the C-AD assumed that the receptor was at the shield boundary nearest the beam loss, and

at the nearest non-C-AD facility or uncontrolled area, such as an on-site road if that was closer. The C-AD assessed releases of radiological material under stable low-wind speed conditions. BNL's stack designs ensure discharge is above a building's eddy zone; this traditionally represents the worst-case for material release. The C-AD similarly evaluated airborne releases from stacks using these wind conditions.

5.3.C-AD's Policy for Selecting Credited Controls

The C-AD identified key ESH issues during the design, testing, commissioning, and operation of accelerators and accelerator facilities. This Section establishes the criteria by which C-AD determines the essential engineered- and administrative-controls applicable to all stages of accelerator development and operation. The C-AD based their methodology for choosing these vital controls on the DOE Order 420.2B, *Safety of Accelerator Facilities*, its successor the DOE Order 420.2C, and DOE G420.2-1, *Accelerator Facility Implementation Guide*.

C-AD designs and operates accelerator facilities to meet the external regulatory requirements covered in BNL's SBMS. However, not all the controls used by C-AD equally impact safety. Essential controls are those critical to protecting the public, workers, and the environment from the more severe postulated events involving non-standard industrial hazards. The ASE ensures that C-AD has additional quality controls, design margins, and pays operational attention to these essential controls.

The DOE Order 420.2C names these essential controls "Credited Controls" and defines them as "…controls determined through safety analysis to be essential for safe operation directly related to the protection of personnel or the environment."

Credited Controls are a limited subset of the total number of controls C-AD employs for overall facility safety and operation. At C-AD, the specific Credited Controls protect against significant exposure to ionizing radiation from accelerator beams, airborne releases of radioactive material, and oxygen-deficiency hazards involving liquid-helium releases. On the other hand, controls that are not Credited Controls offer additional significant reductions in these risks. However, they are not included in the ASE unless they support a Credited Control. C-AD considers employing multiple layers of controls as its defense-in-depth.

C-AD has Credited Control criteria for radiation dose, oxygen deficiency, and airborne concentrations of toxic chemicals; however, there is no potential for significant chemical release from its accelerator facilities. Nevertheless, the C-AD intends to have criteria to guide future experiments and accelerator designs. The C-AD's criteria serve to protect the environment because Credited Controls prevent or mitigate the releases of radioactive materials and toxic chemicals.

The DOE does not require the C-AD's SAD comprehensively address standard industrial hazards. C-AD considers such hazards as those routinely encountered and accepted in general industry, and for which national consensus codes or standards exist to guide safe design and operation. On the other hand, the C-AD evaluated the potential of these hazards to initiate Maximum Credible Incidents (MCIs).

In addition to radiological hazards, the C-AD determined that the Oxygen Deficiency Hazard (ODH) within accelerator enclosures fell outside the scope of national consensus codes and standards, and so developed a criterion requiring Credited Controls for significant ODH hazards within accelerator enclosures.

The selection criteria apply to the postulated consequences of the events analyzed in Chapter 4 of the SAD. The C-AD assumed and evaluated a broad, encompassing range of off-normal events and their potential outcomes. The next Sections present the criteria for determining when Credited Controls are required to prevent or mitigate a particular off-normal event, based upon its potential for consequence. Additionally, the criteria aids in properly selecting a Credited Control when more than one is available or required to mitigate a certain event.

The following list defines terms used throughout these next Sections:

- **Accelerator Facility** - the accelerator and associated roads within site boundaries, the plant and equipment utilizing, or supporting the production of accelerated particle beams and the radioactive material they create to which access is controlled to protect the safety and health of workers, the public, and the environment. The term facilities includes injectors, targets, beam dumps, detectors, experimental halls, non-contiguous support-and-analysis facilities, experimental enclosures and apparatus utilizing the accelerator, regardless of where it was designed, fabricated, or constructed; this included all systems, components, and activities addressed in the Safety Analysis.
- **Accelerator Operations** - those activities of an accelerator and any associated facilities bounded by the Safety Assessment Document. Accelerator operations (and post operations) include the producing, dispensing, analyzing, moving, processing, handling, storing, and other uses of radioactive material within the accelerator facility
- **Accelerator Safety Envelope –** a set of verifiable physical- and administrative-credited controls defining the bounding conditions for safe operation and addressing the accelerator facility's hazards and risks
- **Authorized Alternative** - an ASE-approved pre-specified alternative that may necessarily be used whenever certain ASE Credited Controls are not met under particular conditions. The main advantage of employing an Authorized Alternative is that the SAD reviewed and documented it, and the DOE BHSO approved its use. The authorized alternative must not lower the overall level of safety.
- **Commissioning** - a phase of operating a newly constructed accelerator facility used to obtain control of the beam, and to verify new modes of operation. Commissioning periods often are tailored to each facility's needs, with major variations in their duration, breadth, and formality; in all cases, the activities are preceded by an ARR and bounded by an ASE. At their conclusion, the accelerator is ready to undergo an ARR for routine operations, or directly undertake routine operations if the ARRs for the commissioning process included review of routine operations.
- **Credited Controls** - controls determined through safety analysis to be essential for safe operation directly related to protecting personnel and the environment.
- **Credited Administrative Controls** - requirements controlled by specific procedures, such as verifying system configuration or requiring specific personnel; also included are requirements to wear personal protective equipment (PPE) to enter an area to ensure the facility's safe operation.
- **Credited Engineered Controls** - hardware or structural items (structures, systems, and/or components, both active and passive) that accomplish a particular safety function
- **Chemical toxicity** of accidental releases, based on ERPG-3 for C-AD workers, and ERPG-2 for the public

- **Emergency Response Procedure Guidelines (ERPGs)** – the American Industrial Hygiene Associations' system of guidelines for airborne concentrations of toxic materials
- **ERPG-2** - the maximum airborne concentration seemingly below which nearly all individuals could be exposed for up to 1 hour without experiencing or developing irreversible or otherwise serious health effects or symptoms that might impair their ability to take protective action
- **ERPG-3** - the maximum airborne concentration below ostensibly nearly all individuals could be exposed for up to 1 hour without experiencing or developing life-threatening effects
- **Radiation dose** when used for assessing accident consequences to the public or workers is defined as the equivalent dose received from a single event
- **Safety Analysis** - a systematic documented process to identify the hazards and risks of a given operation. It includes descriptions and analyses of the adequacy of measures taken to eliminate, control, or mitigate the hazards and risks of normal operation, and identification and analyses of potential accidents and their risks
- **Safety Assessment Document (SAD)** - a document containing the pertinent findings from a safety analysis for clarifying the risks of operating an accelerator facility
- **Standard Industrial Hazards** are those routinely encountered and accepted in general industry, and for which national consensus codes and/or standards exist to guide safe design and operation. Standard industrial hazards were evaluated for their potential to initiate accidents related to specific accelerator processes
- **Unreviewed Safety Issue (USI)** - a significant increase in the probability of or consequences from (1) a planned modification creating an unanalyzed postulated accident or condition that could have a significant adverse impact, or, (2) a previously analyzed postulated accident or condition

5.4.C-AD Criteria for Determining Credited Controls

Determining Credited Controls based on risk is not an exact science but an art that people master with experience. Table 5.4.a is the C-AD's template for their risk approach to determine the specifics of the Credited Controls, viz., their consequences, frequencies, and risks. For each specific event, the C-AD assesses its frequency range and its potential consequences via engineering judgment, actual data, and/or engineering analyses. The green risk levels in this Table are those wherein the C-AD chooses to operate. C-AD does not operate in the orange risk levels because additional Credited Controls are required to reduce risk to an acceptable level. C-AD never operates in the red risk levels.

The Extremely Low consequence events in Table 5.4.a are those that do not entail a major injury or occupational illness, or do not significantly affect the environment. The C-AD uses ALARA Controls for these types of events, even if they occur frequently, such as routine radioactive emissions. On the other hand, the C-AD greatly values having the trust of the public and the regulators, and hence uses Credited Controls on some Extremely Low consequence events, such as requiring rainwater-impermeable caps over activated soils. C-AD denoted cap inspection as a Credited Control to assure additional quality control, a design margin, and operational attention to it. Thus, selecting controls is more of a judgment-based process (an art) than a standardized one (science) and the choice depends on economic- and social-factors, rather than just regulations or risk.

Low consequence events are those with minor onsite effects with negligible or no offsite impact. They may cause minor injuries or minor illness, and have minimal environmental impact. As Table 5.4.a indicates, the C-AD uses ALARA and Regulatory Controls to prevent these events, as for example the requirement for personnel protective equipment (PPE) to protect workers against electrical arc flash. However, BNL values the health of its staff, and requires SBMS Controls beyond the Regulatory Controls for arc-flash PPE. BNL's 0^+ PPE requirement reduces the chance of a second-degree burn from an arc flash below that allowed in NFPA 70E.

Medium-consequence events have considerable impact onsite or minor impact offsite. They may cause the deaths, severe injuries, or severe occupational illness to personnel, major damage to a facility, or minor effect on the offsite environment. Operations can be resumed after medium consequence events. The C-AD employs ALARA, Regulatory Controls, and SBMS Controls to prevent these events. However, the C-AD holds the health of its workers in high regard, and hence, requires Credited Controls for ODH, even while fully meeting SBMS requirements. An example here is an event that releases many tons of liquid helium into an occupied RHIC tunnel and/or results in significant accelerator damage, such as that experienced at CERN in 2009. The C-AD identified a helium-release Credited Control to ensure additional quality control, a wider design margin, and operational attention to the ODH controls.

High-consequence events have serious impacts onsite or offsite, resulting in deaths or loss of facility/operation. They significantly degrade the environment and are of great concern to the public and the regulators. The C-AD's criteria require ALARA, Regulatory Controls, SBMS Controls, and Credited Controls for these events if their frequency of occurrence is greater than once in 10,000 years. However, the C-AD considers as unacceptable the risk of immediate radiation injury, even though the Access Controls System for preventing radiation deaths or injuries has an estimated failure rate of less than once in 10,000 years. Therefore, the C-AD specified Access Control System-related Credited Controls to guarantee additional quality control, a design margin, and close operational attention to radiological hazards.

Table 5.4.a C-AD Template for Consequence, Frequency, Risk, and Control

Incident Frequency Range, Incidents per Year	Defense in Depth			
	ALARA Controls	Regulatory Controls	SBMS Controls	Credited Controls
>1	Unnacceptable/ Acceptable Risk	Unacceptable Risk	Unacceptable Risk	Unacceptable Risk
10^{-2} to 1	Acceptable Risk	Unacceptable/ Acceptable Risk	Unacceptable Risk	Unacceptable Risk
10^{-4} to 10^{-2}	Acceptable Risk	Acceptable Risk	Unacceptable/ Acceptable Risk	Unacceptable Risk
$<10^{-4}$	Acceptable Risk	Acceptable Risk	Acceptable Risk	Unacceptable/ Acceptable Risk
Consequence	Extremely Low	Low	Medium	High

To identify an essential Support for a Credited Control, the C-AD considered the outcome of calibrating the interlocking radiation monitors used to remove the accelerator beam in the event of unexpectedly high levels of radiation. Interlocking radiation monitors are an aspect of the Access Control System, which is a Credited Control. The observed as-found out-of-calibration rate for area radiation monitors is about 0.005 per unit per year. For Controlled Areas on the road over the AGS Ring where a person should receive a dose of no more than 20 mrem in the event of a beam misalignment, two independent radiation monitors monitor the area's radiation level. The C-AD allows Controlled Areas if the fault dose is below 20 mrem. For two radiation monitors, there are 0.005 x 0.005 = 0.000025 chances per year of operating with both area monitors out-of-calibration. Assuming 100% occupancy in Controlled Areas, the frequency of a radiation exposure event is determined by multiplying it by the frequency of a beam misalignment fault. Experience suggests a significant beam fault occurs about once every year or less (1 x 0.000025 per year), yielding a rate of overall frequency of an inadvertent 20-mrem dose event in a Controlled Area of one in 40,000 years. Thus, calibrating the interlocking radiation monitors once per year is an acceptable risk since the overall frequency of accidental exposure from an event involving beam loss is less than once in 10,000 years. Thus, listing the annual calibration of interlocking radiation-monitors as a Credited Control Support in the ASE is reasonable since it is essential to the Access Control System, which is a Credited Control.

The C-AD uses the following criteria to determine if more than one Credited Control is required. Several Credited Controls, or a Credited Control and its Support, may have to work in concert to achieve an acceptable risk associated with a specific consequence. Table 5.4.b identifies those events where the C-AD requires more than one Credited Control.

The following criteria for the number of Credited Controls apply to the consequences determined conservatively for each off-normal/accident event evaluated in Chapter 4. Again, determining Credited Controls based on risk is an art and not a science, and the C-AD often chooses to use Credited Controls for events of less consequence than the examples in Table 5.4.b.

Table 5.4.b Example of Consequences, and Minimum Number of Credited Controls

Consequence	Minimum Number of Credited Controls
High: The radiation dose could exceed 1 rem to an offsite receptor	At least two Credited Controls; the controls may be similar but common-mode failure should be considered
Medium: The radiation dose could exceed between 0.1 to 1 rem to an offsite receptor	At least one Credited Control
Medium: The offsite airborne toxic-chemical-vapor concentrations could exceed ERPG-2	At least one Credited Control
High: The radiation dose to a worker could exceed 50 rem, or exposure to airborne chemical concentrations above the defined ERPG-3 level	At least two Credited Controls; the controls may be similar but common-mode failure should be considered
Medium: The unmitigated radiation dose to a worker could exceed 5 rem, or exposure to airborne chemical concentrations above the defined ERPG-2 level	At least one Credited Control
Medium: Each unmitigated event that could cause a worker to breath air with an oxygen concentration below 14% by volume	At least one Credited Control

The C-AD used the following assumptions in constructing Table 5.4.b:

- Radiation dose criteria are for the total equivalent dose, including both the internal and external doses resulting from an event
- Toxic chemical hazards are evaluated against the appropriate criteria of the Emergency Response Procedure Guidelines (ERPGs) associated with that chemical
- Incidents that could impact the public outside C-AD accelerator facilities are assessed in areas immediately outside the BNL site boundary
- Incidents that could impact nearby non-CAD workers outside the C-AD accelerator facilities are assessed in uncontrolled areas inside BNL's site boundary
- Incidents that result in an airborne release of radiological- or toxic-material are assessed by an appropriately conservative meteorological model
- Incidents that affect workers locally are assessed at the shield boundary, or within an accessible enclosure

For credible events that require one Credited Control to protect personnel, the C-AD considered designating an additional Credited Control to afford significant additional mitigation so to help ensure the minimal possible risk to workers. As previously discussed, the process for

identifying an additional control requires the C-AD to evaluate the overall situation and any ALARA, SBMS, or regulatory controls that also are in place, and judge them on a case-by-case basis. Examples credible situations considered were

- An event initiated by, or involving an explosion or large fire that could breach a confinement barrier for inert gas or radioactive material
- The Credited Control depends on correct human actions undertaken within a limited time
- The Credited Control depends on a complex device for which a documented reliability analysis is unavailable

5.5. Selecting Credited Controls

Once the need for a Credited Control is identified, the C-AD follows a process to select the specific Credited Engineered Control or Credited Administrative Control required to accomplish the required safety function. The C-AD used the criteria below to attain the greatest degree of efficiency and reliability in the selection, realizing that there were situations where some criteria were inappropriate for a given situation. Then, the C-AD applied engineering judgment to choose the best items.

When selecting Credited Engineered Controls, the C-AD felt it was imperative to identify any dependencies for each system considered. For example, if a given Credited Engineered Control depended on another system to enable its required function, then at least some aspect of that other system became an essential Support to the Credited Engineered Control (e.g., ODH monitors or area-radiation monitors support the Access Control System). The C-AD followed the selection criteria listed below to the greatest extent practicable when designating Credited Controls and their essential Supports:

- When either an active or a passive device could be a Credited Control to ensure the safety function, C-AD selected the latter. Passive devices, such as configuration-controlled shielding, inherently exhibit higher reliability than active devices, such as interlocking radiation monitors.
- If either an engineered control or an administrative control could perform the needed safety function, then C-AD selected the former. Engineered controls generally have higher reliability than human actions. For example, interlocking radiation monitors that remove the beam are preferred to procedures that require manually stopping the beam, or expecting personnel leave an area when radiation alarms annunciate.
- When there was a choice between a non-credited control that would prevent an event and a Credited Control that would mitigate the consequences of the event, the C-AD selected the non-credited control. C-AD chooses to prevent events rather than mitigating their effects. For example, if the supply of helium could be limited to prevent an oxygen level below 18% compared to installing a Credited emergency-ventilation system, then the supply of helium was controlled.

The C-AD prefers to use Credited Controls that, in some cases, protect against multiple events. An example is using the Access Control System to prevent access to both a radiation hazard and a potential oxygen-deficiency hazard. Working against this preference is the desire to make protection systems simple and efficient for testing and annual re-certification.

The C-AD selected as Credited Controls only those few items essential for protecting workers, the public, and the environment, so allows them to devote a high degree of operational attention to the Credited Controls.

5.6. The ASE and Credited Controls

The ASE defines the Credited Controls and their Supports, Controls that are unique to an accelerator's non-standard industrial hazards. The C-AD considers Credited Controls essential for operating safely. In the ASE, the C-AD identifies the requirements for operability, testing, and surveillance of Credited Controls, as needed, to ensure they reliably perform their designated safety function. The C-AD audits the implementation of Credited Controls using internal departmental assessment programs. C-AD trains line and support personnel on the Credited Controls in the ASE via procedures and classroom teaching. Through the ASE, C-AD minimizes the potential for non-standard industrial hazards to affect the public, workers, and the environment.

The C-AD implements the requirements of DOE Order 420.2B via compliance with the BNL Subject Areas. BNL describes the method used by the Collider-Accelerator Department for change control of the ASE in the Subject Area on Accelerator Safety.

The C-AD's SAD and associated Unreviewed Safety Issue Determinations (USIDs) assume initial conditions, equipment operability, and the beam's energy- and intensity-limits in determining the potential risks of operations. The ASE requirements ensure that particular beam-power limits and particular engineered- and administrative-Credited Controls remain in place so that the actual risks do not exceed their SAD-computed risk categories. The discrete risk categories are a function of the defined ranges of frequency, and consequences of an event, as described earlier in Chapter 5. An increase in frequency or the consequences of an event in the context of the C-AD's ASE or SAD signifies that the event jumps from one frequency range or consequence category to the next higher ones.

The DOE approves the ASE requirements since the ASE specifies agreement on the boundaries and limits of the safe operation of the C-AD facility. No activity or facility modification may compromise the ASE. The C-AD screens all proposed changes for hazards that potentially lie outside the bounds of those considered in the SAD and in the ASE. The C-AD maintains change control using the C-AD procedure on USIDs. The latter process may entail rewriting portions of the SAD and modifying the ASE. Such revisions require the applicable review and approval. Reportable events or discoveries may initiate the USID process. If an activity or modification requires a revision to the ASE, other than an editorial one, then the C-AD sends to the DOE for approval an analysis of, and basis for the change. The C-AD does not place an activity or a change into operation until after the DOE has approved the modification to the ASE. This process ensures a robust management of change program to maintain the consistency of the facility configuration with the C-AD SAD's assumptions. The C-AD operates the accelerator facilities such that actual risks never exceed SAD's predicted risks.

The C-AD treats a variation from the Credited Controls and their Supports as a violation of the ASE, and must report the event as an occurrence, as defined by BNL's SBMS Subject Area on Occurrence Reporting. The C-AD defines a violation as not satisfying a Credited Control, its Supports, or its Authorized Alternative. The C-AD makes notifications of occurrences according to the requirements in the C-AD Operations Procedure Manual. The DOE

and the C-AD expect strict adherence to the approved bounding conditions of the ASE during all commissioning activities and operations. Part of the C-AD configuration control program requires informing the DOE of 1) positive USIDs, and 2) proposed changes to ASE-bounding conditions that the DOE must approve.

Authorized Alternatives are approved compensatory actions that, when implemented as specified in the ASE, prevent ASE violations and reduce unnecessary impact on operations. The C-AD pre-plans compensatory actions such that shift personnel handle minor failures. The C-AD based the Authorized Alternatives on detailed risk analyses, previous experience, or informed engineering judgment; in recognizing that equipment is not 100% reliable, time is allowed to restore full operability of Credited Controls. Implementing the Authorized Alternatives does not significantly affect risk.

The C-AD specifies Administrative Controls that are Credited Controls or Credited Control Supports in Sections 2 through Section 4 of the ASE. Section 5 lists Administrative Controls that are not Credited Controls to indicate defense-in-depth, supporting compliance with ALARA-, Regulatory-, and SBMS-Controls. The C-AD's management evaluates each violation of Section 5 Administrative Controls to determine the need to report an occurrence.

If a Credited Control or its Supports are not satisfied, and it has a specific Authorized Alternative, then C-AD immediately implements it, or stops the activity employing the affected equipment as soon as is practicable. The intent is promptly to establish the Authorized Alternative in a controlled, safe manner. If the Authorized Alternative is not satisfactory or if it has a limited time for use, then the C-AD halts the affected activity in a controlled, safe manner as soon as practicable after the expiration of the time interval .

If a Credited Control or its Supports have no specific Authorized Alternative and is not satisfied, then C-AD stops the activity that uses the affected Credited Control as soon as practicable. The intent is immediately to end the undesirable activity in a purposeful risk-free way.

The C-AD and the DOE allow emergency actions that depart from a Credited Control or its Supports when no actions consistent with them are immediately apparent, and when operators use such actions to protect the public, workers, and the environment. This requirement recognizes that situations may occur in a procedure that the C-AD did not anticipate. It allows qualified, responsible individuals to take emergency protective actions. The on-duty person in charge of the C-AD facility's safety must approve emergency actions, as defined in the operating procedures, when the emergency occurs, and must report to the C-AD management within 2 hours. Operators inform management of such actions so that proper communications with the DOE may take place without diverting the operator's immediate focus on ensuring safety.

5.7. The Bases of Credited Controls for Operations at the AGS, EBIS, Linac, and Booster

5.7.1. Credited Controls for Maximum Credible Incidents - ASE Limits

The C-AD cannot exceed the maximum credible beam-power of accelerators without changing its structures, systems, and components (SSC). Altering the SSC requires authorization by the C-AD's management (ASE). **Bases:** The maximum credible beam-power is associated with the Credited Controls for radiation hazards.

For the Linac, the C-AD based the maximum credible beam-power on the maximum product of the number of its low-energy unpolarized protons or polarized protons, and its particle kinetic energy, which is 1.1 x 10^{18} GeV in one hour (ASE). **Bases:** This is the Linac's physical limit. Major change would have to occur in the physical size of, and electrical power to the Linac to increase this limit. The C-AD based the limit of 1.1 x 10^{18} GeV in one hour on 200 MeV high energy protons at intensity of 1560 terra-protons (TP)/s (50 mA, 10 pulses per second and 500 µsec/pulse), and used this bounding hourly limit, which is 250 kW maximum beam power, in all Linac dose and dose-rate calculations in the SAD.

For the Booster, the maximum product of the number of low-energy and high-energy unpolarized protons, polarized protons, or heavy ions and the particle's kinetic energy in the Booster ring is 1.1 x 10^{18} GeV in one hour (ASE). **Bases:** This is the physical limit of the Booster. Major changes would have to occur in the physical size of, and electrical power to the Booster Ring to raise this limit. The C-AD based this limit on 3-GeV high-energy protons at an intensity of 100 terra-protons (TP) per second. The C-AD used this bounding particle-energy hourly limit, i.e., 49 kW of beam power, in calculating all Booster doses and dose rates.

For the AGS, the maximum product of the number of high-energy unpolarized protons, polarized protons or heavy ions and particle kinetic energy is 1.1 x 10^{19} GeV in one hour (ASE). **Bases:** This is the physical limit of the AGS. To increase it, major changes must be made to the physical size of and electrical power to the AGS Ring. The C-AD based the limit of 1.1 x 10^{19} GeV in one hour on 30 GeV high-energy protons at an intensity of 100 TP/s; this bounding hourly limit, which is 490 kW of beam power, was used in all AGS dose and dose-rate calculations in the SAD.

For the EBIS, there are no particles with energy > 2 MeV/amu (ASE). **Bases:** With the exception of deuterons, the EBIS's vacuum pipe confines any radiation hazard from beams < 2 MeV/u. During operations with deuterons at any possible EBIS beam power, the C-AD controls this hazard with ALARA and SBMS controls.

5.7.2.Credited Controls for Radiation Hazards Due to Access

An access controls system (ACS) must prevent access to the beam during operations in the AGS, the Booster, the Linac, or the EBIS (ASE). **Bases:** The ACS is the Credited Control for accelerator enclosures and it prohibits access to beam; it removes the beam when access is forced. The design of the access controls system is fail-safe and configuration- controlled. The C-AD Radiation Safety Committee approves any changes that may affect the reliability of the system's safety function.

5.7.3.Credited Controls for Oxygen-Deficiency Hazard

Alarm systems must be in place to minimize the likelihood of injury/illness from the release of an inert gas (ASE). **Bases:** Although the EBIS has a cryogenic solenoid magnet, the AGS Ring is the only area having the potential for an oxygen-deficiency hazard whenever the C-AD fills the Cold Snake Magnet with cryogens. The Credited Controls are the oxygen sensors and alarm system in the area of the AGS Ring that can rapidly warn occupants of reduced oxygen concentration if the magnet-system pressure-boundary fails.

5.7.4.Credited Control Supports to Protect Against Radiation

The C-AD protects groundwater by using a soil cap over activated soil shielding if the calculated annual activity concentration of sodium-22 in the leachate exceeds 25%, or tritium in leachate exceeds 5% of the Drinking Water Standard. BNL's management may waive the requirement for a cap (ASE). **Bases:** This satisfies the SBMS's Design Practice for Known Beam Loss Locations, and the permanent BNL Waiver 2010-4; it keeps to ALARA the potential groundwater contamination caused by activated soil leachate. C-AD must justify any need for a waiver to BNL's management who must approve the deviation before allowing the change. Personnel health or safety is not a significant consequence of contaminating the groundwater. However, BNL loses credibility with regulators and the public should an event occur. No drinking-water supply wells onsite lie in the path of a groundwater plume, and if one were created, it would take more than 20 years for contaminated groundwater to travel beyond BNL's site boundary, so allowing time for remediation.

Authorized Alternative: If the C-AD discovers a breach in an installed cap, the alternative equivalent protection approved by C-AD's management, must be in place within 10 days of the discovery. The C-AD must start permanent repair to the cap as soon as practicable (ASE). **Bases:** Sodium-22 and the tritium are present in the soil even when the accelerator is off. Thus, the C-AD requires cap integrity at all times. Rainfall drives the leachate into the groundwater. The C-AD bases estimates of potential contamination on the annual amounts of rainfall. Additionally, a crack or breach in a cap normally occupies just a tiny fraction of the cap's total area. In ten days, only a small fraction of the sodium-22 and tritium covered by a breached cap can move into groundwater. Experience showed that the resulting ribbon of contamination is diluted from dispersion and radioactive decay as it traverses toward BNL's site boundary. There is no significant increase in risk to workers or the public from waiting 10 days to repair such a breach; the C-AD repairs breaches as soon as practicable. The 10 days allow planning and implementing the most effective repair process. If the breach is a large one, as soon as possible the C-AD places over it a temporary plastic cover, used effectively in the past, to minimize potential contamination to the groundwater.

Before beginning operations, the beam, accelerator, and beam-line enclosures all must have configuration-controlled, properly placed shielding (e.g., berms, shield blocks). The C-AD requires a completed Radiation Safety Checklist before starting operations with the beam each year (ASE). **Bases:** This method documents the visual verification that all shielding assumed in the safety analysis is in place before starting beam operations, thereby ensuring that no excessive radiation exposures occur.

During beam operations of an accelerator, the associated ACS must be functional, meaning that those portions of the ACS that prevent exposure to beam radiation inside enclosures, and remove beam when there is excessive beam loss are functional (ASE). **Bases:** The C-AD uses access control systems (ACSs) to ensure no one receives excessive radiation exposure. These ACSs are fail-safe, redundant, and functionally tested in accordance with the Radiological Controls Manual. The C-AD controls the configuration of the ACS design and of any changes that may affect the reliability of the system's safety function; the C-AD's Radiation Safety Committee approves all such changes.

During the operations of an accelerator, the area-radiation monitors interfacing with the ACS to remove beam during excessive beam loss must be within their calibration date (ASE).

Bases: The proper operability and placement of radiation monitors interfaced with the ACS ensures that no worker receives unnecessary radiation-exposure from routine beam loss and faults. C-AD does not consider a radiation monitor operable unless it has up-to-date calibration or a waiver that extends the calibration due date. BNL's Radiological Control Manager approves all waivers to extend the calibration interval. The waiver documents that radiation monitors are operable, and the calibration stickers do not apply during the waiver period.

During beam operations, the C-AD controls the locations of area radiation monitors interfaced with ACS via a configuration-control system (ASE). **Bases:** Configuration control of ACS radiation monitors ensures that they are in the proper locations so that the sensed dose-rate provides the MCR's operations staff with accurate alarms. Each ACS radiation monitor has a built-in keep-alive source that enables the ACS to continuously sense and react if a radiation monitor is disconnected, or has failed. When a radiation monitor is added or replaced, the C-AD's Radiological Control Technicians (RCTs) must test it with an independent radioactive source to verify that the monitor sends its output signals to the correct readout location in the MCR.

5.7.5.Credited Control Support to Protect Against an ODH

When C-AD fills the AGS Cold Snake Magnet with liquid cryogens, the installed ODH alarm system must be operable (ASE). **Bases:** The failure of the Cold Snake Magnet pressure boundary could release all cryogens within the magnet, so causing a rapid oxygen deficiency in the immediate area. An alarm is sufficient warning to evacuate the AGS Ring and avoid injury. The Cold Snake Magnet contains 110 L of LHe during normal operation. If the Snake connects to a 500 L LHe Dewar during filling operations, it may release 610 L LHe. The C-AD assumes a conservative length of 100 feet on either side of the Cold Snake as the fixed volume into which this helium is released, and has documented the oxygen-deficiency analyses.

Authorized Alternative: Upon discovering an inoperable installed ODH alarm system, the C-AD allows entry into the area covered by the alarm system as long as each entrant wears an alarming portable-oxygen monitor (ASE). **Bases:** A portable oxygen monitor (POM) is as effective as the installed monitor and alarm system; thus having each individual wear a POM when entering the posted ODH area does not raise the risk of exposure to oxygen deficiency. The Access Controls Group restores the operation of the installed ODH alarm system; there is no time limit on using POMs in place of the installed system.

5.7.6.Calibration, Testing, Maintenance, and Inspections that Support Credited Controls

The calibration, testing, maintenance, and inspections needed to support Credited Controls are as follows.

The C-AD must functionally test the Access Controls System (ACS) in accordance with requirements in BNL's Radiological Control Manual (ASE). **Bases:** The calibration, maintenance, and testing of Credited Controls and Supports ensure they are in place during beam operations as assumed in the safety analysis. BNL's Radiological Control Manual requires annual tests of the ACS, which includes a functional check of the interlocking area radiation-monitors; this requirement was shown to be acceptable based on failure rates and reliability studies of this redundant equipment. The manager of BNL's Radiation Controls Division grants

extensions for operational flexibility. C-AD requested and received extensions twice in the last 20 years.

Area-radiation monitors must undergo annual calibrations; an allowed extension must not exceed 15 months (ASE). **Bases:** C-AD bases the frequency of radiation-monitor calibration on experience and engineering judgment. The C-AD annually calibrates the radiation monitors used to interlock the accelerator beam off in the event of unexpectedly high-levels of radiation. The C-AD bases the 3-month extension on the mean-time-to-failure (MTTF). An extension affords operational flexibility for scheduling and performing the calibration. The C-AD does not rely routinely on an extension, each of which must be approved by the C-AD Radiation Safety Committee Chair and the manager of BNL's Radiation Control Division. The observed out-of-calibration failure rate for the C-AD area radiation monitors is about 5×10^{-3} per monitor per year. If the C-AD assumes a constant failure rate, then increasing the interval from 12- to 15-months would increase the out-of-calibration failure rate to ~6.2×10^{-3} per monitor per year. Because potential fault doses between 20 mrem and ~100 mrem are an extremely low consequence and since the radiation-monitors' failure rate would rise only from 5×10^{-3} to ~6.2×10^{-3} between calibrations, the consequence category and frequency range of this failure is not increased. Thus, this is acceptable risk of accidental low-level unnecessary exposure (an MTTF once in ~160 years versus once in 200 years).[1]

When the C-AD fills the AGS Cold Snake with liquid cryogens, the installed ODH alarm system must be tested within its annual interval that must not exceed 15 months (ASE). **Bases:** The C-AD bases the annual calibration frequency of the installed oxygen-monitors and the 3-month extension on experience and engineering judgment. No failure records are maintained for these sensors; thus, the C-AD cannot quantify the small increase in failure during this extension period. An extension allows operational flexibility for scheduling and performing the testing; the C-AD does not rely routinely on an interval extension. The Authorized Alternative, i.e., the use of POM, affords the same level of protection should the installed system fail; thus, there are no adverse safety effects from using the Authorized Alternative.

Radiological shielding and barriers (e.g., berms, shield blocks, and fencing) must undergo visual inspection before operations to ensure that they are in place and functional (ASE). **Bases:** This interval coincides with the annual running period at C-AD accelerators, and the inspection is part of the facility startup. The C-AD follows procedures, and documents all shielding using a Radiation Safety Checklist for each facility. Once operational, periodic radiation-dose-rate surveys ensure the radiation barriers remain in place and are effective. The annual environmental thermo-luminescent dosimeter (TLD) program also demonstrates the efficacy of the shielding and shielding controls.

Annual visual inspections of the rainwater barriers for activated soil must ensure that they are in place and functional (ASE). **Bases:** Experience demonstrated that annual inspections suffice to uncover any problems with impermeable caps. The C-AD has not experienced any significant cap failures that allowed contamination of the groundwater since this program started over 10 years ago. This interval also coincides with the annual operating periods for C-AD

---

[1] Radiation Alarms and Access Control Systems, National Council on Radiation Protection and Measurements, NCRP Report No. 88, Appendix A: Discussion of Reliability, 7910 Woodmont Avenue, Bethesda, MD. 20814.

facilities; the inspections occur during the annual shutdown of the accelerators before starting operations each year.

The C-AD visually inspects rainwater barriers for the AGS g-2 area and the Linac BLIP spur activated soil areas twice yearly; the first inspection period must occur before 8 months (ASE). **Bases:** The basis of this inspection interval is

- Agreement documented in Medical Department and Collider-Accelerator Department, Memorandum of Understanding BLIP and g-2 Cap Inspection Process dated June 25, 2007, and
- Record of Decision (ROD) for Area of Concern 16T g-2 Tritium Source Area and Groundwater Plume, Area of Concern 16K Brookhaven Linac Isotope Producer and Area of Concern 12 Former Underground Storage Tanks dated April 6, 2007.

The entire inspection process became the responsibility of the C-AD in October 2010 when BNL transferred the BLIP to the C-AD. The ROD requires visual inspections of the AGS g-2 cap and Linac BLIP area cap on a frequency of at least two times per year. The ROD does not specify the interval between these inspections. C-AD bases the 2-month extension on experience and engineering judgment, to provide operational flexibility in scheduling and performing the inspections. The C-AD does not rely routinely on extensions; if C-AD uses the two-month extension to go to eight months before the first inspection, then the second inspection must be in the same twelve-month period.

5.7.7.Administrative Controls

While the C-AD does not treat a violation of non-credited administrative controls in the same way as Credited Controls or Credited Control Supports in the ASE, the following administrative controls in the ASE provide defense-in-depth to ensure the operational integrity of all controls during operations. For the AGS, Booster, Linac and EBIS, the following are the non-credited administrative controls in the ASE:

- Minimum Main Control Room (MCR), and Experimental Area Staffing Controls
    - C-AD does not require operators in the MCR for local EBIS operation (ASE). **Bases:** EBIS can be operated locally by system experts if the beam is not injected into the Booster where it can be transported to AGS and then to the RHIC or the NSRL.
    - Two qualified Linac Operators must be on duty in MCR for Linac-only operation with a beam (ASE). **Bases:** Linac operations are sufficiently simple that two operators can safely control the beam. Under these conditions, Linac beam is not injected into the Booster where it can be transported to AGS and then to the RHIC or the NSRL.
    - One qualified Operations Coordinator and one qualified operator must be on duty for all other beam operations (ASE). **Bases:** Once the MCR allows beam transport to other accelerators, i.e., the Booster and beyond, it is prudent to have an Operations Coordinator on duty coordinating the activities of the entire C-AD facility operating with a beam.
    - During normal operations, one of the two operators always must remain in the Main Control Room. (ASE). **Bases:** The expectation that the MCR is operational at all times during beam operations ensures that personnel are monitoring system operations, and that the operations always comply with the ASE's and the C-AD's

operating procedures. Additionally, operators can respond in a timely manner to off-normal conditions and emergencies.

  - Authorized Alternative: If one operator is incapacitated, the remaining operator may continue operations as long as the C-AD re-establishes operating requirements within two hours (ASE). **Bases:** Allowing time to replace an operator because of injury, illness, or an emergency, allows operations to continue at the discretion of the remaining operator. The C-AD bases these shift-controls on experience and engineering judgment. A single operator easily can stop beam operations should conditions arise that burden him or her.

- The minimum experimental-area staffing must be a qualified Collider-Accelerator Support (CAS) watch person for any EBIS, Linac, Booster, or AGS operations with a beam (ASE). **Bases:** This requirement assures that there are shift personal to respond to problems in the field outside the MCR. The C-AD bases this control on experience with many accelerators throughout BNL's history of operating large accelerators. The on-duty CAS watch communicates by radio with the MCR and the C-AD forwards alarms to the CAS radio. Normally, a CAS watch continuously makes rounds of all C-AD facilities.
- Accelerator and Experiment Modifications
  - Approved configuration control procedures must require a review of modifications against the Credited Controls in the ASE (ASE). **Bases:** This rule ensures that C-AD has a system to review modifications to the accelerator facility that potentially could violate the assumptions in the SAD safety analysis, or the ASE requirements.
  - The C-AD reviews each experiment in the AGS, Booster, Linac, EBIS, AGS Experimental Halls, U-line, and V-line for configuration control and safety before running the beam (ASE). **Bases:** This rule ensures that the C-AD adequately reviews experimental installations and modifications before initial operations with beam. These reviews are part of the configuration-management program assuring that these changes do not involve USIs, and do not violate ASE requirements.
  - An experiment dormant for longer than one year between runs does not require review during the dormancy period. Experiments that run more than once within 12-months must be reviewed as determined by the C-AD management before each single scheduled run (ASE). **Bases:** The annual review and the before-resumption of operation review after an extended shutdown ensure that Credited Controls and Supports are operational, and that only approved modifications were made. If the interval between runs is short, and it is certain that users made no experiment changes, then the C-AD's management may waive the pre-run review.
- The C-AD must document any modifications to the AGS, Booster, Linac, EBIS, and AGS Experimental Halls, U- line, and V-line, via the Unreviewed Safety Issue Determination (USID) process to determine if the proposed change could demonstrably increase the frequency or consequences of known hazards, or could introduce new ones. If a positive USID is identified, then the C-AD will not implement the modification without the DOE's approval (ASE). **Bases:** This ensures that the C-AD adequately reviews a modification before initiating operations. These reviews are part of the configuration management program ensuring that these changes do not involve USIs and do not violate the ASE's requirements. It also assures no changes occur that potentially might violate the assumptions in the safety analysis. The USID process would document the impacts of such changes, and

ensure the DOE's approval of a change to the ASE, should it be required, before effectuating the changes,

- Beam-loss-induced radiation within uncontrolled areas for credible repeated losses must be less than 100 mrem in a year. The C-AD shall use BNL's environmental TLD monitors to check the efficacy of the radiation control program (ASE). **Bases:** This rule ensures that the C-AD does not exceed the DOE's limit of 100 mrem per year to a non-radiation worker, thereby satisfying the requirements in DOE Order 458.1, Radiation Protection of the Public and the Environment.
- ODH area classification must comply with the requirements in BNL's SBMS Subject Area, ODH Classification/Controls (ASE). **Bases:** This order ensures that the C-AD analyzes and controls oxygen-deficiency hazards in conformity with the BNL Subject Area, Oxygen Deficiency Hazards.

5.8.The Bases for Credited Controls for Operating the Energy Recovery Linac (ERL)

The C-AD cannot exceed the maximum credible beam power of ERL without changing its structures, systems, and components (SSC). Changing them requires the C-AD management's authorization. The maximum credible beam power is related to the Credited Controls for radiation hazards.

5.8.1.Credited Controls for Maximum Credible Incidents - ASE Limits

For the ERL, the C-AD limits electron kinetic energy to 3.5 MeV for the super-conducting radio frequency (RF) gun (ASE). **Bases:** The C-AD used this value for electron-injection energy in their shielding analysis. The C-AD requires all engineered changes to undergo a safety analysis and review for a potential USI before exceeding 3.5 MeV.

The C-AD limited the power source of the superconducting gun to deliver no more than 1.5 MW to the gun (ASE). **Bases:** Even though the power rating of the superconducting gun is 1.0 MW at a rated average continuous beam-current of 200 mA, the average beam power is 0.7 MW. The C-AD used 1.5 MW as the ASE Credited Control since the C-AD employed this value in their shielding analysis.

The C-AD limited the electron kinetic energy's limit to 25 MeV for the Prototype ERL ring (ASE). **Bases:** This is the maximum ERL electron beam energy assumed in the shielding analysis. The ERL's staff cannot go above this level due to the limiting maximum accelerating gradient achievable with the existing 5-cell cavity. Engineered changes to the 5-cell cavity necessitate a safety analysis and a review for potential USIs if the ERL proposes an increase to the maximum accelerating gradient.

The C-AD restricted the electron beam power so that it may not exceed the equivalent of 10 MW of instantaneous power for the electron beam in the Prototype ERL ring (ASE). **Bases:** Based on the rated average continuous-beam current of 200 mA, the average beam power is 5.0 MW at maximum beam energy of 25 MeV. In their shielding analysis, the C-AD conservatively assumed 10 MW; hence, engineered changes must undergo a safety analysis and a review for a potential USI if the ERL proposes an increase in power to rise above 10 MW.

The C-AD limited the power source for the five-cell cavity to delivering to it a maximum of 60 kW of RF power (ASE). **Bases:** The restorative power of the 5-cell cavity's power supply

for maximum continuous beam-loss limits the maximum beam-power that can be lost. The rated power of the 5-cell cavity is 50 kW; however, the C-AD conservatively assumed 60 kW in the shielding analysis; accordingly, any engineered changes must undergo a safety analysis and a review for a potential USI if ERL proposes exceeding 60 kW.

The C-AD limited the beam power of the electron beam striking the beam dump to 1.5 MW for 3.5 MeV (ASE). **Bases:** The C-AD assumed the beam deposited 1.5 MW in the electron-beam dump, which defines the cooling requirements for operating the dump. In addition, the C-AD assumed this conservatively high power to evaluate whether ozone production was a potential safety issue in the ERL cave. During operations, the C-AD will measure ozone to determine if potential exposures are above the Threshold Limit Value of the American Conference of Governmental Industrial Hygienists (ACGIH). The C-AD requires any engineered changes to undergo a safety analysis and a review for a potential USI before going above 1.5 MW electron beam power.

5.8.2.Credited Controls for Radiation Hazards Due to Access

During beam operations, an access control system must prevent access to the beam (ASE). **Bases:** The ACS, the Credited Control for accelerator enclosures, prohibits access to beam; if access is forced, the ACS removes beam. The design of the ACS is fail-safe and configuration-controlled. The C-AD's Radiation Safety Committee approves any changes that might affect the reliability of the system's safety function.

5.8.3.Credited Controls for Oxygen-Deficiency Hazard

Engineered systems (interlocks and alarms) must be in place to minimize the likelihood of injury/illness from a release of inert gas (ASE). **Bases:** Potentially, the ERL's blockhouse and pump room may have an oxygen deficiency hazard when C-AD charges the system with cryogens. Should the system-pressure boundary fail, the credited control is the ODH protection system, comprising oxygen sensors, and an alarm system, along with an ODH fan in each area.

5.8.4.Credited Control Supports to Protect Against Radiation

Before the beam or other radiation-producing operations begin (e.g., the electron gun testing or the operation and testing of the 5-cell cavity), prototype ERL enclosures must have all shielding properly in place and be configuration-controlled (ASE). **Bases:** The Radiation Safety Checklist is used to verify that all shielding assumed in the safety analysis is in place before beam operations begin each year, or after modifications to the shielding, thereby ensuring that no excessive radiation exposures occur.

During the beam or other radiation-producing operations (e.g., the electron gun, or 5-cell cavity operations and testing), the ERL ACS must be functional (ASE). **Bases:** This assures the functionality of those portions of the ACS that prevent exposure to the beam or to X-rays from operating RF cavities inside the enclosure. It also ensures the functionality to remove the beam when excessive beam loss occurs. The design of the ACS is configuration-controlled, and the C-AD requires that the C-AD Radiation Safety Committee first approve any changes that might

affect the reliability of the system's safety function. The ACS is fail-safe, redundant, and functionally tested in accordance with the Radiological Controls Manual.

During the beam or other radiation-producing operations, areal radiation monitors interface with the ERL ACS to remove beam when they sense excessive beam loss (ASE). **Bases:** The calibration of these monitors must be up-to-date. The operability and placement of radiation monitors interfaced with the ACS ensures no one receives excessive radiation from routine beam-loss and beam faults. The C-AD does not consider a radiation monitor operable unless its calibration is current.

During the beam or other radiation-producing operations, the locations of area radiation monitors interfaced with the ERL Access Control System must be configuration-controlled (ASE). **Bases:** Configuration control of radiation monitors ensures that they are properly located so that the sensed dose-rate provides the ACS and the MCR's operations staff with accurate alarms. Each ACS radiation monitor has a built-in, keep-alive source that enables the ACS to continuously sense and react should a radiation monitor become disconnected or has failed. When the C-AD replaces or adds a radiation monitor, the C-AD's RCTs use an independent radioactive source to verify the monitor sends it output signals to the correct readout location in MCR.

5.8.5.Credited Control Supports to Protect Against an ODH

When the C-AD charges the system with cryogens, the exhaust fans and the ODH portion of the ERL's ACS must be operable, that is, when the oxygen concentration falls below 18% (nominal) in either the ERL blockhouse or the ERL pump room, the associated ODH fan turns on (ASE). **Bases:** The failure of the pressure boundary of the ERL cryogenic system in the blockhouse or pump room could release all the cryogens within these enclosed areas, thereby rapidly causing an oxygen deficiency in the immediate area. An alarm provides sufficient warning to evacuate the area and avoid injury. A spill rate of 3275 SCFM from a 1-inch copper LN2 transfer line is the bounding credible release-rate in the blockhouse; accordingly, with a minimum ODH exhaust-fan capacity of 13,750 SCFM, the oxygen concentration there never falls below 16%. Conservatively assuming a complete failure of a 500 L Dewar in the blockhouse, the oxygen level would decline to about 11%. Even assuming a conservative probability of the pressure boundary's failure to initiate the inert gas release, in both cases, the area remains classified as ODH 0. In the event of such a release in the pump room, the bounding credible release of 1150 SCFM would result only from a rupture of a Kinney vacuum-pump discharge line. With a minimum ODH exhaust-fan capacity of 4850 SCFM, the pump room's oxygen concentration never will fall below 16%. Hence, assuming a conservative probability of the pressure boundary failure to initiate the release of the inert gas, the area remains classified as ODH 0.

<u>Authorized Alternative</u>: If either exhaust fan is not operable, or the ODH portion of the ERL ACS is out-of-service, entry to the affected ERL's block house or pump room is allowed only if each entrant has their own 5-minute escape pack (or a self-contained breathing apparatus), and a portable oxygen-monitor (POM) (ASE). **Bases:** A POM and a 5-minute escape pack (or a self-contained breathing apparatus) are just as effective as ODH monitors and an exhaust fan system; thus, equipping each individual with this PPE when entering the posted ODH area does not to heighten the risk of exposure to oxygen deficiency. The affected areas are

small, and the C-AD trains personnel in using the PPE and evacuation procedures. The C-AD considers the risk negligible for individuals failing to use the PPE and evacuate in a release event. The Access Controls Group is responsible for restoring the installed protection system to operation, but there is no time limit on using this Authorize Alternative in place of the installed system. The Authorized Alternative allows continued testing of the prototype ERL without affecting the program. Considering the anticipated non-shift program for the ERL, the C-AD determined that C-AD workers could restore a failed ODH protection system soon after the failure of an ODH system.

5.8.6.Calibration, Testing, Maintenance, and Inspections that Support Credited Controls

Calibration, maintenance, and testing of Credited Controls and Supports ensure that they are in place during beam operations as the SAD safety analysis assumes.

The C-AD functionally tests the ACS in accordance with the requirements in BNL's Radiological Control Manual (ASE). **Bases:** BNL's Radiological Control Manual requires the semi-annual testing of the ACS, including a functional check of the interlocking area's radiation monitors; semi-annual testing is acceptable based on the failure rates and reliability studies for this redundant equipment. Extensions for operational flexibility require the approval of the Manager of the Radiation Controls Division.

The C-AD requires the area radiation monitors to undergo an annual calibration not exceeding 15 months using an extension request. (Section 5.7.6 details the bases for 15 months).

If the C-AD charges the system with cryogens, then the ventilation exhaust fans and associated oxygen monitors used to mitigate an oxygen-deficiency event must undergo annual testing, which must not to exceed 15 months. (Section 5.7.6 details the bases for 15 months).

Radiological shielding and barriers (e.g., shield blocks, and fencing) must undergo visual inspection before operations to ensure that they are in place and functional. Section 5.7.6 gives the bases for visually inspecting shielding and barriers.

5.8.7.Administrative Controls

While C-AD does assume that non-compliance with non-credited administrative controls is a violation of the ASE, administrative controls provide defense-in-depth to help ensure the operational integrity of all controls during operations. For the ERL, the following are the non-credited administrative controls in the ASE:

- Minimum Prototype ERL Control-Room Staffing Controls
    - One qualified Operator and one other person (i.e., ERL Operator-in-Training, or ERL Physicist) must be on duty when the Prototype ERL beam is operating. During beam operations, one of these two people must remain at all times in the Prototype ERL Control Room (ASE). **Bases:** The C-AD requires the ERL Control Room be operational during beam operations to ensure that personnel are monitoring to ensure ERL safety systems remain in compliance with the ASE, to ensure adherence to the departmental operating procedures, and to ensure that personnel can respond in a timely manner to off-normal conditions and emergencies.
    - Authorized Alternative: If the extra person (i.e., the ERL Operator-in-Training or the ERL Physicist) is incapacitated, the Trained Operator may continue operations as

long as the C-AD restores these operating requirements within two hours (ASE). **Bases:** Allowing time to replace the extra operator allows operations to continue at the discretion of the remaining Trained Operator. The C-AD bases these shift-requirements on experience at BNL's other accelerators, and on engineering judgment. A single Trained Operator can stop beam operations easily should conditions arise that burden him or her.

- Prototype ERL Modification and Controls
  - Approved configuration control procedures must ensure the review of modifications against the Credited Controls in the ASE (ASE). **Bases:** This ensures that C-AD has a system to review all modifications to the accelerator facility that potentially could violate the assumptions in the SAD safety analysis, or the ASE requirements.
  - C-AD reviews each experiment, or any modification of the ERL for configuration control and safety before running the beam (ASE). **Bases:** This ensures that the C-AD adequately reviews all installations and modifications before the initial operations with beam. These reviews are part of the configuration management program assuring these changes do not involve USIs and do not violate ASE requirements.
  - An experiment that lies dormant for more than one year between runs does not require review during this period. Experiments that may run more than once within 12 months require review as determined by the C-AD's management before each single scheduled run (ASE). **Bases:** The annual operations review, or that before resumption of operation after an extended shutdown ensure that Credited Controls and Supports are functional and only approved modifications occurred. If the interval between runs is short, and it is certain that users made no experimental changes, then the C-AD's management may waive the pre-run review.
- The C-AD, using the Unreviewed Safety Issue Determination (USID) process, must document modifications of the ERL that are determined to increase the frequency or consequences of known hazards, or which introduce new ones. If a positive USID exists, the C-AD does not implement the modification without the DOE's approval (ASE). **Bases:** This ensures that the C-AD adequately reviews a modification before initial operations. These reviews are part of the configuration- management program that assures these changes do not involve USIs or violate ASE requirements. It also guarantees that no changes occur that could violate the assumptions in the safety analysis. The USID process would document the impacts of such changes, and would secure the DOE's approval of any required change to the ASE before the changes go into effect.
- Beam-loss-induced radiation within uncontrolled areas for credible repeated losses must be less than 100 mrem in a year. The C-AD shall use BNL's environmental TLD monitors to check the effectiveness of their radiation-control program (ASE). **Bases:** This ensures that C-AD does not exceed the DOE's limit of 100 mrem per year to a non-radiation worker. This satisfies the requirements in the DOE Order 458.1, Radiation Protection of the Public and the Environment.
- ODH area classification must comply with the requirements in BNL's SBMS Subject Area, ODH Classification/Controls (ASE). **Bases:** This ensures that C-AD analyzes and controls oxygen-deficiency hazards in accord with BNL's Subject Area, Oxygen Deficiency Hazards.

5.9. The Bases for Credited Controls for RHIC Operations

5.9.1. Credited Controls for Maximum Credible Incidents - ASE Limits

This section details the Credited Controls that limit the RHIC accelerator's operations to protect the environment, workers, and the public. The C-AD operates the s RHIC within the assumptions in the current C-AD SAD. The following limits are the maximum beam energy and the number of particles that a Ring at RHIC is capable of containing. The C-AD cannot operate the accelerator beyond these Credited Controls without changing the RHIC's structures, systems, and components (SSCs), which would require authorization by the C-AD's management.

For heavy ions with mass numbers from 2 to 238, their maximum number in each ring must not exceed the equivalent of $5x10^{11}$ Au ions at 120 GeV/u (ASE). **Bases:** This is the number and energy of heavy ions assumed for all dose- and dose rate-calculations in the SAD. The Radiation Safety Committee (RSC) must approve the limits for each new species and ion energies before injection. In addition to ensuring the shielding is appropriate for each new ion species and energy, the RSC approves fences or other barriers to prohibit access to areas where shielding is not feasible such as a ventilation shaft. Equivalent means that the species' intensity and energy would yield a dose and dose rate that do not exceed that computed for the stated gold values.

The maximum number of protons in each ring must not exceed the equivalent of $5x10^{13}$ at 300 GeV (ASE). **Bases:** This is the number and energy of protons assumed for all dose- and dose rate-calculations in the SAD. The RSC must approve the limits for different energy and number of protons in each ring before their injection. Equivalent means that the mix of number of protons and energy would yield a dose and dose rate that do not exceed that computed at the stated values.

5.9.2. Credited Controls for Radiation Hazards Due to Access

During operations with beam or the RF in RHIC, the relevant access-control system must prevent access to the RHIC tunnel or the RF enclosure (ASE). **Bases:** The ACS is the Credited Control for the accelerator enclosures, and it prohibits access to the beam; if access is forced, the ACS removes the beam or power to the RF cavities. The C-AD employs a configuration-management system for the access controls system, and the C-AD Radiation Safety Committee approves all changes that may affect the reliability of the system's safety function.

5.9.3. Credited Controls for Oxygen-Deficiency Hazard

Engineered systems (interlocks and alarms) must be in place to minimize the likelihood of injury/illness from a release of inert gas (ASE). **Bases:** The Collider tunnel and the RHIC refrigerator building 1005R have the potential for an oxygen-deficiency hazard. In the former, the C-AD protects STAR and PHENIX intersection regions from the intrusion of inert gas with gas barriers; thus, ODH is not a factor in these two tunnel areas. The RHIC's compressor building, 1005H, and the six service buildings with the valve boxes are not ODH areas as per SBMS criteria. However, the C-AD posts them ODH 0 and has installed operable ODH sensors and ODH fans to raise the staff's awareness of the large volumes of helium liquid and gas in-

process inside these buildings. Exhaust fans minimize any significant reduction of oxygen in the buildings from helium releases. The Credited Controls are the exhaust fans, oxygen sensors, and alarm system in the refrigerator building and the Collider tunnel since these areas may exhibit significant reduction in oxygen concentration should the magnet or refrigerator-system pressure-boundary fail.

5.9.4.Credited Controls for Fire Hazard

The C-AD must provide manually initiated exhaust fans to exhaust smoke in the RHIC tunnel during occupancy (ASE). **Bases:** Although fire and smoke are standard industrial hazards, the C-AD deemed smoke removal in the collider tunnel as non-standard due to the size of the tunnel. Locating the source of smoke quickly may prevent the initiation of other problematic events such as a helium release.

Flammable-gas detection systems in the Intersecting Regions (IRs) for STAR and PHENIX must be operational during running periods when flammable gases are in the experimental detectors (ASE). **Bases:** Flammable gas is a standard industrial hazard. However, the C-AD determined that the large volumes of flammable gas in STAR and PHENIX are non-standard and identified gas detection as a Credited Control.

5.9.5.Credited Control Supports to Protect Against Radiation

If the calculated annual activity concentration of sodium-22 in the leachate exceeds 25% or tritium exceeds 5% of the Drinking Water Standard, the C-AD protects groundwater via placing a soil cap over an activated soil shielding. BNL's management may waive a cap requirement if justified by the C-AD (ASE). **Bases:** This satisfies the SBMS's Design Practice for Known Beam Loss Locations and the permanent BNL Waiver 2010-4, and keeps ALARA the potential groundwater contamination caused by activated soil leachate. If the C-AD needs a waiver, the deviation must be justified to BNL management who must approve it before allowing the change. Personnel health or safety is not a significant consequence of contaminating the groundwater. However, BNL loses credibility with regulators and the public should an event occur. No on-site drinking water supply are in the path of a groundwater plume and it would take more than 20 years for contaminated groundwater to travel beyond the BNL's site boundary, allowing time for remediation should a groundwater plume be created.

<u>Authorized Alternative</u>: If C-AD discovers a breach in an installed cap, the alternative equivalent protection approved by the C-AD's management must be in place within 10 days of the discovery, and permanent repair to the cap must be initiated as soon as practicable (ASE). **Bases:** Sodium-22 and the tritium are present in the soil even when the accelerator is off. Thus, the C-AD requires cap integrity at all times. Rainfall drives leachate into the groundwater. The C-AD bases the estimates of potential contamination on the annual amounts of rainfall. Furthermore, a crack or breach in a cap normally is a tiny fraction of its total area. Only a small fraction of the sodium-22 and tritium covered by the cap can move into groundwater during a breach over 10 days. Experience showed that the resulting ribbon of contamination dilutes from dispersion and radioactive decay as it moves toward the BNL site boundary. Waiting 10 days to repair a breach does not cause a significant increase in risk to workers or the public; C-AD repairs breaches as soon as practicable. The 10 days allow for planning and implementing the

most effective repair. If the breach is large, a temporary plastic cover that C-AD used effectively in the past goes in place as soon as possible to minimize the potential contamination in groundwater.

Before beam or other radiation-producing operations (e.g., RF testing), the Collider and beam-line enclosures must have all shielding (e.g., berms, shield blocks) and barriers properly in place and configuration-controlled (ASE). **Bases:** This control documents the visual verification that all shielding and barriers assumed in the safety analysis are in place before starting beam operations, so ensuring that there are no excessive radiation exposures.

During beam operations, the RHIC Access Controls System (ACS) must be functional; accordingly, when there is excessive beam loss, or x-rays from RF cavity operations, those portions of the ACS preventing exposure to beam radiation or to RF-generated x-rays inside enclosures must remove beam or turn off RF power (ASE). **Bases:** The ACS for RHIC ensures that there will not be exposure to excessive radiation from beam or RF generated x-rays. The ACS is fail-safe, redundant, and functionally tested in accordance with the Radiological Controls Manual. The design of the ACS is configuration controlled. The C-AD Radiation Safety Committee must approve changes that may affect the reliability of the ACS's safety function.

During RF-only operations, the 4 o'clock portion of the RHIC ACS must be functional (ASE). **Bases:** The ACS for the RHIC guarantees that no exposure to excessive radiation from RF-generated x-rays during testing and conditioning of the RF cavity at the 4 o'clock area of the tunnel. The C-AD interlocks the power supplies for the cavities to the ACS system, assuring the capability of stand-alone running when the Collider beam is not in operation. At full power, measured dose rates range between 25- to 200-rad/h at 1 foot from the RF cavity.

During beam or RF operations, the C-AD must interface area radiation monitors with the ACS to remove beam should excessive loss occur, or turn off the RF when there is excessive x-ray radiation. These area radiation monitors must be within their calibration date (ASE). **Bases:** The operability and placement of radiation monitors interfaced with the ACS ensures no excessive exposure to personnel from radiation from routine beam loss and beam faults. C-AD considers a radiation monitor operable when it has up-to-date calibration or it has a waiver extending its calibration due date. If the Radiological Control Manager approves such a waiver, then the waiver is the documentation that the radiation monitors are operable, and the calibration stickers do not apply during the period of the waiver

During operations with beam or RF cavities, the locations of area radiation monitors interfaced with the RHIC ACS must configuration-controlled (ASE). **Bases:** Configuration control of ACS radiation monitors ensures that they are in the proper locations so that the sensed dose-rate provides the MCR's operations staff with accurate alarms. Each ACS radiation monitor has a built-in keep-alive source enabling the ACS to continuously sense and react to a disconnected or failed radiation monitor. When the C-AD replaces or adds new ones, the C-AD RCTs test them using an independent radioactive source to verify that the monitor sends it output signals to the correct readout location.

Either RHIC's ACS or the Radiation Safety LOTO of appropriate critical devices must prevent the Linac's H^- high-intensity source from transporting protons to the W-line (ASE). **Bases:** Preventing the high-intensity proton source from Linac from entering the W-line ensures that dose rates and doses at Thomson Road near RHIC, an uncontrolled area for radiation protection, are within the risks computed in the SAD. Using interlocks or Radiation Safety

LOTO is equally effective. This requirement is on the Radiation Safety Checklist for sending the beam to the W-Line.

5.9.6.Credited Control Supports to Protect Against an ODH

When the cool-down to below room temperatures of the superconducting-magnet cryogenic-system begins, at least three ODH exhaust fans in the RHIC Compressor Building (1005H) must be operational (ASE). **Bases:** Although basing this requirement on refrigerator cool down is a conservative approach, it ensures that the controls are in place. Even with four ODH fans for the compressor building, in the baseline ODH calculation, the C-AD assumes only three are operable. The resulting steady-state oxygen concentration is 19.3%; assuming only two operating fans, the value drops to 18.8%. Due to the large helium inventory in this building, the C-AD decided to post 1005H as an ODH 0 area to make staff aware of the hazards.

When the superconducting-magnet cryogenic-system cool-down starts, the ODH portion of the RHIC Access Controls System in Building 1005H must be operable; that is, when oxygen concentration falls below 18% (nominal), the ODH fans must turn on (ASE). **Bases:** The C-AD assumed that the ODH fans started 1 minute after the release of the inert gas and that the trip point was 18% oxygen. Tests revealed that the ODH fans start and are up to full capacity in less than 30 seconds after sensing 18% oxygen.

Authorized Alternative: If less than three ODH fans are operable in 1005H or the ODH portion of ACS is out-of-service, entry is allowed if each entrant has their own 5-minute escape-pack (or a self-contained breathing apparatus), and a portable oxygen monitor (ASE). **Bases:** If less than three fans are operable or the ODH system is out-of-service, the C-AD treats the area as an ODH 1 area, and requires staff entering the building to have ODH PPE. A portable oxygen monitor (POM) is as effective as the installed monitor and alarm system; thus, requiring each individual to wear a POM to enter the posted ODH area does not affect the risk of suffering from oxygen deficiency.

When liquid helium is in the liquid helium pots in the RHIC Refrigerator Building (1005R), at least one ODH exhaust fan must be operational (ASE). **Bases:** Even though there are two ODH fans in 1005R, one allows sufficient time for individuals to exit safely after hearing the ODH alarm. It takes 5 minutes for the oxygen concentration to decrease to a value requiring this building to have ODH 1 controls with one fan operating; thus, the C-AD posts 1005R ODH 1 when operating.

Similarly, with liquid helium in the pots, the ODH portion of the RHIC ACS must be operable, viz., when the oxygen concentration falls below 18% (nominal), the ODH fans must turn on (ASE). **Bases:** When calculating the minimum oxygen concentration during the transient, the C-AD assumed that the ODH fans start 1 minute after the inert gas is released, assuming an 18% oxygen trip point. Tests demonstrated that the ODH fans start and are up to full capacity in less than 30 seconds of sensing 18% oxygen.

With liquid helium in the pots in 1005R, each entrant has their own 5-minute escape pack (or a self-contained breathing apparatus) and a portable oxygen monitor (ASE). **Bases:** For ODH-1 spaces, BNL's SBMS requires an escape pack and a POM for each entrant due to the increased risk of low oxygen-concentration. C-AD trains all ODH-1 qualified individuals periodically to inspect and use escape packs and POMs; they also must pass a physical exam to ensure that they are physically fit to escape safely from an area experiencing an ODH event.

Authorized Alternative: If no ODH fan is operable in the Refrigerator Building or the ODH portion of the RHIC ACS is out-of-service, then the C-AD allows entry to an entrant with a self-contained breathing apparatus and a portable oxygen monitor (ASE). **Bases:** If no fans are operable or the ODH system is out-of-service, the C-AD allows entry to the building only to entrants wearing a self-contained breathing apparatus (SCBA). The SCBA is required with no fans operable because the oxygen concentration would fall rapidly to a very low value; the SCBA ensures that the individual does not experience adverse effects from this. If the building's oxygen sensors fail, the fans would not start at the 18% trip point; in this situation, the SCBA ensures that the individual suffers no adverse effects. A portable oxygen monitor (POM) is as effective as the installed oxygen-monitor and alarm system; thus having each individual wear a POM on entering the building prevents the risk of exposure to oxygen deficiency.

When the C-AD cools the superconducting magnet cryogenic system below 80 K, at least three ODH exhaust fans in each RHIC tunnel sextant must be operational (ASE). **Bases:** The low density of helium assures that above 80 K, it takes hours for a leak to reduce the oxygen concentration below 18% in the tunnel. However, calculations showed that if the helium was at 40 K, the oxygen concentration in a tunnel sextant would to fall to 18% in 18 minutes. At that point, the exhaust fans would start and the minimum oxygen concentration would not be less that 17.9%. Thus, a helium temperature of 80 K is a conservative value for ODH-0 controls to be in place in the tunnel. Even though each sextant has from 4 to 6 ODH fans, the safety analysis conservatively assumed only 3 fans were operable.

When the C-AD cools the superconducting magnet cryogenic system below 80 K, the ODH portion of the RHIC ACS in the tunnel sextants must be operable, i.e., the ODH fans must turn on when the oxygen concentration falls below 18% (nominal) (ASE). **Bases:** In evaluating the minimum oxygen concentration during the transient, the C-AD assumed the ODH fans would start 1 minute after release of the inert gas, with the trip point at 18% oxygen. Tests demonstrated that the ODH fans start and reach full capacity in less than 30 seconds after sensing 18% oxygen.

Authorized Alternative: If less than three ODH fans are operable or the ODH portion of the RHIC ACS is out-of-service in a sextant, the C-AD allows entry if each entrant has their own 5-minute escape pack (or a self-contained breathing apparatus) (ASE). **Bases:** If less than three fans are operable or the ODH system is out-of-service, C-AD treats the area as an ODH 1 area, and requires ODH PPE to enter the tunnel. A portable oxygen monitor (POM) is as effective as the installed monitor and alarm system; thus, having each individual wear a POM when entering the posted ODH area has no effect on the risk of exposure to oxygen deficiency.

For the RHIC's tunnel sextants when the C-AD cools the superconducting magnet cryogenic system below 40 K, at least three ODH exhaust fans in each RHIC tunnel sextant must be operational (ASE). **Bases:** At 40 K down to the operating temperature of 4.5 K, the density of helium is much greater than at higher temperatures so requiring ODH-1 controls. The ODH 1 classification of the RHIC tunnel depends on the fatality rate from the failure of a pressure boundary failure for the helium system, viz., 2.6×10^{-6}/h. The fatality rate, in turn, depends upon the product of the likelihood of the helium release, P, and the fatality factor, F. The assumed oxygen transient results in a very low oxygen-concentration, such that the fatality factor is equal to 1; accordingly, the fatality rate solely depends on the likelihood of a helium release (2.6×10^{-6}/h). Even though each tunnel sextant has from 4 to 6 ODH fans, the safety analysis conservatively assumed only 3 fans were there.

For RHIC tunnel sextants when C-AD cools the superconducting magnet cryogenic system below 40 K, the ODH portion of the RHIC Access Controls System must be operable, that is, when the oxygen concentration falls below 18% (nominal), the ODH fans therein must turn on (ASE). **Bases:** When calculating the minimum oxygen concentration during the transient, the C-AD assumed the ODH fans to start 1 minute after the release of the inert gas with a trip point at 18% oxygen. Tests showed that the ODH fans start and reach full capacity in less than 30 seconds of sensing 18% oxygen.

For RHIC tunnel sextants when the C-AD cools the superconducting magnet cryogenic system below 40 K, each individual entering the tunnel must have a 5-minute escape pack (or a self-contained breathing apparatus), and a portable oxygen monitor (ASE). **Bases:** These are the controls required by SBMS for ODH-1 areas. Testing verified that 5 minutes would allow sufficient time to escape safely from the tunnel area. Walking slowly from the worst location in the tunnel, it took less than 3 minutes reach the exit.

Authorized Alternative: If less than three ODH fans are operable, or the ODH portion of the RHIC's ACS is out-of-service in a sextant, entry to that sextant is allowed if the each person has their own 5-minute escape pack (or a self-contained breathing apparatus) and a portable oxygen monitor (ASE). **Bases:** If less than three fans are operable or the ODH system is unserviceable, the C-AD treats the sextant as an ODH 1 area and requires an ODH-1 PPE to enter. A portable oxygen monitor (POM) is just as effective as the installed monitor and alarm system; thus, requiring each individual to wear a POM when entering the posted ODH area does not affect the risk of exposure to oxygen deficiency.

For RHIC tunnel sextants when the 80 K Cooler is operating, at least three ODH exhaust fans in each RHIC tunnel sextant must be working (ASE). **Bases:** Assessments of the oxygen concentration transient following a major breach in the helium pressure boundary during 80 K cooler operation demonstrated that exhaust fans would not need to be operational if the C-AD follows the SBMS's ODH subject area. However, the C-AD management determined that at least 3 operable fans are necessary to have confidence that people can be safely evacuated from the affected area.

For RHIC tunnel sextants with the 80 K Cooler operating, the ODH portion of the RHIC's ACS must be operable; that is, when the oxygen concentration falls below 18% (nominal), the ODH fans in that sextant must turn on (ASE). **Bases:** When the tunnel's magnet loop is at 80 K, the time for a tunnel sextant to meet the SBMS criteria to classify as an ODH-0 area, using a conservative pressure boundary failure-rate, would be 34.3 minutes from leak initiation. This would allow 21.5 minutes for evacuating the tunnel following the ODH alarm trip at 18% oxygen concentration. These values do not take credit for any ODH exhaust fans.

Authorized Alternative: If less than three ODH fans are operable in a sextant, or the ODH portion of the RHIC ACS is out-of-service, the C-AD allows entry to that sextant if each entrant has their own 5-minute escape pack (or a self-contained breathing apparatus) and a portable oxygen monitor (ASE). **Bases:** If less than three fans are operable, or the ODH system is out-of-service, the C-AD continues to treat the area as an ODH 0 area. A portable oxygen monitor (POM) is just as effective as the installed monitor and alarm system; thus requiring each individual to wear a POM when entering the posted ODH area has no effect on the risk of exposure to oxygen deficiency.

Individuals may enter the RHIC tunnel when the helium temperature in magnets is below 40 K if the RHIC magnet's main power is limited to supply a current of ≤ 530 amperes. The C-

AD assures this restriction by enabling the over-current trip circuitry, or by locking the power supplies out (ASE). **Bases:** The purpose of this procedure is to limit the energy available to an electrical fault to less than 1 MJ when personnel enter the tunnel. The probability of a cryogenic helium release into the tunnel increases if the RHIC magnet's main power supplies energize to their full operational level of 100 MJ, i.e., the energy that is stored in each of the ring's magnetic fields. Limiting the energy to below 1 MJ reduces the probability of a significant electrical arc in a main magnet that could cause the failure of the magnet helium pressure-boundary.

Authorized Alternative: The C-AD's Department Chair, Chief Electrical Engineer, and the ESH Coordinator must approve in writing if the Main Magnet power supply currents require an increase above 530 amperes while there are personnel in the RHIC tunnel. Work Planning must document controls to minimize this situation's hazard (ASE). **Bases:** Recognizing that certain testing or trouble shooting of equipment in the RHIC tunnel must take place, this allows entry with >1 MJ of energy in the magnets provided that qualified authorized management personnel first review and approve the work plan to minimize risks to the extent practicable.

5.9.7.Credited Control Supports to Protect Against Smoke Inhalation in the RHIC Tunnel

C-AD may allow personnel to occupy the RHIC tunnel enclosure if workers can activate the exhaust fans in the occupied area during a fire or smoke emergency (ASE). **Bases:** This requirement ensures that the exhaust fans are available to remove smoke if there is a fire. This conservative requirement reflects the very low fire loading in the RHIC tunnel, and gives the BNL Fire/Rescue Group a way to remove smoke rapidly from the affected area.

Authorized Alternative: If the exhaust fans in an occupied area are inoperable, then C-AD must take actions to remove all personnel from the occupied area within four hours. The C-AD must prevent occupancy until the fans are operable; however, workers may enter the affected area using PPE, as required by work planning, to restore the fans to operability (ASE). **Bases:** The 4-hour grace period allows workers time to place equipment in a safe condition before C-AD prohibits occupancy of the RHIC tunnel. Experienced engineering judgment is that the risk of a significant tunnel fire is insignificant during the 4-hours allowed to removing personnel from the area.

5.9.8.Credited Control Supports to Protect against Flammable Gas Hazards at STAR

Whenever flammable gas is in the integrated detector positioned in the intersecting region (IR), the flammable gas detection systems of both STAR and the RHIC ACS must be operational (ASE). **Bases:** There are two redundant systems, one is part of the RHIC ACS, and the other is part of the experimental system's instrumentation.

Authorized Alternative: Within 2 hours of discovering the presence of a flammable gas, and, if requested by the STAR Experimental Shift Leader, the C-AD Chair or designee may allow partial or full inoperability of either one of the two flammable-gas detection systems for up to 80 hours. The C-AD must determine if the benefit of continuing the STAR detector's operations outweighs the potential risk of damaging the STAR experiment. Operating procedures must specify the compensatory actions taken during inoperability (ASE). **Bases:** The two hours allows time to obtain approval from the C-AD Chair or designee. The two systems are redundant, so operating with one of them ensures that detection of flammable gas remains available. C-AD chose 80 hours so that one of the two systems could be out-of-service over a 3-day weekend without interrupting the experimental program. Because one flammable gas system still is operating, the risk to people is minimal.

Whenever flammable gas is in the integrated detector positioned in the IR, and if the Silicon Detectors are functioning, then the Inner Field Cage detector's ventilation system must be delivering airflow (ASE). **Bases:** The detector's ventilation-system supplies conditioned air through the detector's inner field cage to prevent pooling of any potentially leaking flammable gas. If the system fails, STAR turns off the FTPC, TPC, and the Silicon Detectors, if present, thereby removing the ignition source and minimizing the possibility of a fire.

Whenever flammable gas is in the integrated detector within the IR, at least one of the two IR emergency exhaust fans connected to the RHIC's Access Controls System must be operable (ASE). **Bases:** Both redundant fans start automatically either when the flammable-gas-detection trips or when manually started by the experimenter. They rapidly exhaust the STAR IR's volume of flammable gas to reduce fire risk.

Whenever flammable gas is in the integrated detector positioned in the IR, STAR must maintain a minimum of 1775 ft^3 of inert purge gas to dilute the detector's volumes of flammable gases below 25% of the Lower Explosive Limit (ASE). **Bases:** The TPC at STAR has the barely flammable P10 gas (90% argon, and 10% methane). Purge gases are argon from LAr, and nitrogen from LN2. To reduce the detector's content to < 25% of the LEL requires 1775 ft^3 of inert gas. The total purge gas inventory for STAR is 22,500 ft^3. While running, STAR does not allow this inventory below a LAr level of 30 inches. Conservatively assuming that the purge-gas inventory is at the 20-inch level, and the only available purge gas is the smallest volume argon gas, this still leaves 15,000 ft^3 to purge the TPC detector; thus, there is always at least eight times the inventory needed to reduce the flammable gas in the TPC detector to < 25% LEL.

Whenever flammable gas is in the integrated detector in the IR, the TPC gas used in the detector must be P-10 or its equivalent. The C-AD must approve equivalent hazardous gases before using them (ASE). **Bases:** P-10 gas is 90% argon and 10% methane, and the DOT considers P10 nonflammable; however, the Bureau of Mines found that it can ignite and burn if the methane diffuses out and the argon becomes concentrated. There are no specific exposure limits for its methane content. The C-AD maintains oxygen levels above 19.5% for routine work, and the release of P10 into the IR would not reduce oxygen below that level. The hazard of

concern has been the potential flammability of this gas. The MSDS for this gas states that it is a colorless, odorless, non-flammable gas mixture. The main health hazard from releasing this gas mixture is asphyxiation due to the displacement of oxygen because both components of this mixture are simple asphyxiates. Requiring C-AD approval to change the gas ensures un-reviewed safety hazards do not enter in the IR.

Whenever flammable gas is in the integrated detector positioned in the IR, when STAR powers the electronics in the integrated detector in the IR, the detector's Highly Sensitive Smoke Detection (HSSD) system, or the ceiling level HSSD system must be operational (ASE). **Bases:** An HSSD system senses low-levels of smoke from many locations and sounds a fire alarm; either one of these systems provides the same early detection of a fire. The HSSD is optimum for the detector because the experimental IR is a large volume, encompassing many small areas that need smoke detection. Instead of using many inexpensive inherently low sensitivity point smoke detectors, the C-AD installed an HSSD system that consists of a single, more sensitive detector and an air sampling system to cover the required volume. The latter consists of a length or lengths of pipe along which are strategically placed sampling holes. A small fan draws air along the pipe from the sampling holes and through the detector-measuring chamber. The detector is stable, reliable, and much more sensitive than a point smoke detector. High sensitivity means that they detect smoke at a much earlier stage in the development of a fire, and so may considerably reduce damage levels. The STAR-operated HSSD system senses the tight areas internal to the particle detector. The ceiling-level HSSD system is part of BNL's fire-detection system. Neither HSSD alarms start the IR's emergency exhaust fans. If the fans started, they would feed fresh air to the fire.

5.9.9.Credited Control Supports to Protect against Flammable Gas Hazards at PHENIX

Whenever flammable gas is in the integrated detector positioned in the IR, the flammable-gas detection systems in both PHENIX and the RHIC ACS System must be operational (ASE). **Bases:** Because of the large volumes of flammable gases, the ASE includes Credited Controls for this hazard. There are two redundant systems; one is part of the RHIC ACS, and the other is part of the experiment-system instrumentation.

<u>Authorized Alternative:</u> Within 2 hours of discovery, and if requested by the PHENIX Experiment Shift Leader, the C-AD Chair or designee may allow partial- or full-inoperability of either one of the two flammable-gas detection systems for up to 80 hours with flammable gas present. The C-AD must determine if the benefit of continuing operations of the PHENIX detector outweighs the potential risk of damaging the PHENIX experiment. Operating procedures must specify the compensatory actions taken. **Bases:** The two hours allows time to obtain approval from the C-AD Chair or designee. The two detection systems are redundant, so operating with one still ensures the availability of flammable-gas detection. The 80 hours suffices for one of the two systems to be unserviceable over a 3-day weekend without interrupting the experimental program. Because there is still one operational flammable-gas detection system, the risk to people is minimal.

Whenever flammable gas is in the integrated detector positioned in the IR, the emergency fan system, SF1/EF1 connected to the RHIC ACS must be operable (ASE). **Bases:** SF1 is a supply fan and EF-1 is an exhaust fan in the IR. Fans automatically start when required by the

RHIC ACS flammable-gas-detection, or the experimenter may manually start them. They rapidly exhaust the PHENIX IR volume of flammable gas to reduce fire risk.

Whenever flammable gas is in the integrated detector positioned in the IR, a minimum of 2200 ft^3 of inert purge gas must be available to dilute the detector flammable gas volumes below 25% of the Lower Explosive Limit (ASE). **Bases:** Five detectors at PHENIX have either ethane or isobutene gas. The purge gases are LN2, argon, or carbon dioxide. To reduce all five detectors to < 25% LEL takes 2000 ft^3 of inert gas. While running PHENIX, its purge gas inventory does not fall below ~33% capacity. Conservatively assuming that the inventory is at 20% of capacity, and the only available purge gas is the smallest volume argon gas, this leaves 8900 ft^3 to purge all five detectors. Thus, there is always at least four times the inventory needed to reduce the flammable gas in the detectors to < 25% LEL.

Whenever flammable gas is in the integrated detector positioned in the IR, either the detector's HSSD or the ceiling levels' HSSD system must be operational (ASE). **Bases:** An HSSD system provides a fire alarm as it senses smoke; both systems afford the same early detection capability. An HSSD is optimum for the detector because the large volume of the experimental IR has many small areas that need smoke detection. Instead of using many inexpensive, inherently low-sensitivity point-smoke detectors, the installed HSSD system consists of a single, more sensitive detector with an air sampling system to cover the required volume. The latter consists of a length or lengths of pipe pierced with strategically placed sampling holes A small fan draws air along the pipe from the sampling holes and through the detector-measuring chamber. The detector is stable, reliable and highly sensitive and is able to detect smoke at a very much earlier stage in the development of a fire; this may considerably reduce damage levels. The PHENIX-operated HSSD system senses the tight areas internal to the particle detector. The ceiling-level HSSD system is part of BNL's fire detection system. Neither HSSD alarm starts the IR's emergency exhaust fans so to prevent fresh air from feeding the fire.

Whenever flammable gas is in the integrated detector positioned in the IR and if the Ring Imaging Cherenkov Counter (RICH) detector runs with flammable gas, both the PHENIX High Capacity Ventilation System must be operational and the interstitial space between the RICH and the Pad Chamber FEE must be inerted (ASE). **Bases:** The RICH detector currently uses only carbon dioxide, which is inert gas, not a flammable one. Thus, the operability of the High Capacity Ventilation System is not required, nor must the interstitial space between the RICH and the Pad Chamber FEE be inerted. If the experiment requires this detector to use flammable gas, this requirement must be satisfied.

Whenever PHENIX powers the integrated detector electronics in the IR, one of the following three systems must be operational: The electronics racks' interlocks, the detector's HSSD system or, the ceiling-level HSSD system (ASE). **Bases:** This requirement applies at all times the detector is in the IR to reduce the chance of fire spreading from the electronics racks. Each rack has its own experimental system interlock that removes power to the rack upon detection of smoke, heat, or a water-leak inside the rack. Each of the HSSD systems provides sufficiently early alarm of a fire.

If personnel are in the IR when flammable gas is present, then both the personnel plug door and the emergency escape labyrinth must be available for their egress (ASE). **Bases:** This ensures that there are two exits from the IR and satisfies the Life Safety Code.

5.9.10.Calibration, Testing, Maintenance, and Inspections that Support Credited Controls

The C-AD must functionally test the RHIC ACS in accordance with requirements in BNL's Radiation Control Manual. **Bases:** Calibration, maintenance, and testing of Credited Controls and Supports ensure that they are in place as assumed in the SAD safety analysis. Annual testing of the access controls system is acceptable based on failure rates and reliability studies on this redundant equipment. The Radiation Controls Division Manager may grant extensions for operational reasons.

Before their running period, or each year, the C-AD must functionally test all ODH ventilation fans and air-inlet louvers signaled by the RHIC ACS (ASE). **Bases:** This testing is part of the RHIC ACS's functional test and C-AD completes it before allowing the helium refrigeration system to begin to cool down the helium below room temperature.

The C-AD must functionally test the hardware current limiting system for the main magnet power supplies before the running period (ASE). **Bases:** This ensures the operability of RHIC's main-magnet power-supplies' current-limiting hardware before each running period. The Power Supply Group communicates the findings to the Chief Electrical Engineer, the ESSHQ Division Head, the MCR Group Leader, the Maintenance Coordinator, and the ESH Coordinator.

STAR's Highly Sensitive Smoke Detection (HSSD) systems must undergo annual testing (not to exceed 15 months) (ASE). **Bases:** This timing coincides with the routine testing during summer shutdowns. The 3-month extension allows operational flexibility. The C-AD judges that this extension insignificantly increases the risk of failure of smoke detection in the IR because the ceiling HSSD system is redundant and separately tested. The C-AD completes the testing before each running period.

STAR's Flammable Gas Detection System must undergo annual testing (not to exceed 15 months) (ASE). **Bases:** This timing corresponds with routine testing during summer shutdowns. The 3-month extension allows operational flexibility. The C-AD deems the 3-month extension insignificantly increases the risk of failure of smoke detection in the IR because the RHIC's ACS flammable-gas detection system is redundant and separately tested. The C-AD completes the testing before each running period.

STAR emergency exhaust fans must undergo annual testing (not to exceed 15 months) (ASE). **Bases:** This coincides with routine testing during summer shutdowns. The 3-month extension interval affords operational flexibility. The C-AD judges the 3-month extension insignificantly increases the risk of failure of smoke detection, as the IR purge-failure emergency exhaust system is redundant and separately tested. The C-AD completes the testing before each running period.

PHENIX Highly Sensitive Smoke Detection (HSSD) systems must undergo annual testing (not to exceed 15 months) (ASE). **Bases:** This coincides with routine testing during summer shutdowns. The 3-month extension interval supports operational flexibility. The C-AD judges the 3-month extension does not significantly increase the risk of failure of smoke detection in the IR because the ceiling HSSD system is redundant, and separately tested. The C-AD completes the testing before each running period.

PHENIX Flammable Gas Detection System must undergo annual testing (not to exceed 15 months) (ASE). **Bases:** This coincides with the routine testing during summer shutdowns. The 3-month extension interval allows for operational flexibility, and the C-AD judges that it insignificantly increases the risk of smoke-detection failure in the IR because the RHIC ACS

flammable-gas detection system is redundant and separately tested. The C-AD completes the testing before each running period.

PHENIX emergency exhaust-fans must undergo annual testing (not to exceed 15 months) (ASE). **Bases:** This coincides with routine testing during summer shutdowns. The 3-month extension interval allows for operational flexibility. C-AD judges the extension interval of 3-months insignificantly increases the risk of smoke detection failure in the IR because the purge emergency exhaust system is redundant and separately tested. C-AD completes the testing before each running period.

PHENIX High Capacity Ventilation System must undergo annual testing (not to exceed 15 months) (ASE). **Bases:** This coincides with routine testing during summer shutdowns. The 3-month extension allows operational flexibility. C-AD does not significantly increase the risk of IR ventilation failure. The C-AD completes the testing before each running period.

Interlocks for PHENIX's electronics-racks in the IR must undergo annual testing (not to exceed 15 months) (ASE). **Bases:** This coincides with routine testing during summer shutdowns, with the 3-month extension offering operational flexibility. The C-AD judges the 3-month interval insignificantly increases the risk of failures of these interlocks. The C-AD finalizes testing before each running period.

Area radiation monitors must undergo annual calibration (not to exceed 15 months) (ASE). **Bases:** the C-AD bases the calibration frequency of radiation-monitors on experience and engineering judgment. The C-AD annually calibrates the radiation monitors used to interlock the accelerator beam off in the event of unexpectedly high-levels of radiation. The C-AD bases the 3-month extension on the mean time to failure (MTTF). While the extension provides for operational flexibility for scheduling and undertaking the calibration, there is no routine reliance on it. The Chair of C-AD's Radiation Safety Committee and BNL's Radiation Control Division Manager approve extensions. The observed out-of-calibration rate for C-AD area radiation monitors is about 5×10^{-3} per monitor per year. Assuming a constant failure rate, then, according to the C-AD, increasing the interval from 12- to 15-months would increase the out-of-calibration rate to ~6.2×10^{-3} per monitor per year. Because potential fault doses between 20 mrem and ~100 mrem are of extremely low consequence and because the radiation-monitor failure rate would only increase from 5×10^{-3} to ~6.2×10^{-3} between calibrations, the consequence category and frequency range of this failure has not increased. Thus, this extension is acceptable risk of accidental exposure (an MTTF once in ~160 years versus once in 200 years).

Radiological shielding and barriers (e.g., berms, shield blocks, and fencing) must undergo visual inspection before operations to ensure that they are in place and functional (ASE). **Bases:** This interval coincides with the annual running period at the C-AD accelerators, and actually is part of the facility startup. The C-AD uses procedures, and documents shielding and barrier configuration using a Radiation Safety Checklist for each accelerator and accelerator facility. Once operating, periodic radiation-dose-rate surveys ensure radiation barriers remain in place and are effective. Additionally, C-AD uses an annual environmental TLD program to demonstrate the effectiveness of the shielding and shielding controls.

Rainwater barriers for activated soil must undergo an annual visual inspection to ensure that they are in place and functional (ASE). **Bases:** Experience demonstrated that annual inspections are adequate to uncover problems with impermeable caps. The C-AD has not experienced any significant cap failures resulting in allowing groundwater contamination over

the 10 years since this program started. This inspection interval also coincides with the C-AD's inspections of facilities during the annual shutdown of the accelerators before operations begin.

5.9.11.Administrative Controls

While not treated as Credited Controls or Supports, the administrative controls in this section of the RHIC ASE provide defense-in-depth to help ensure the operational integrity of all controls during operations. For RHIC, these administrative controls are

- Minimum Main Control Room (MCR) and Experimental Area Staffing
    - One qualified Operations Coordinator and one qualified operator must be on duty in MCR when beam is operating. During normal operations, one of the two must remain in the MCR at all times (ASE). **Bases:** The requirement that the MCR is occupied by a qualified person during beam operations ensures that personnel are monitoring system operations, that operations remain in compliance with the ASE and operating procedure requirements, and that operators can respond in a timely manner to off-normal conditions and emergencies. Once the C-AD allows beam transport to other accelerators, i.e., the Booster and beyond, it is prudent to have an Operations Coordinator on duty to coordinate the operations of the entire C-AD facility. Authorized Alternative: If one operator is incapacitated, the remaining operator may continue RHIC operations as long as the C-AD restores personnel requirements within two hours (ASE). **Bases:** Allowing time to replace an incapacitated operator, allows operations to continue at the discretion of the remaining operator. The C-AD bases these shift-operating requirements on experience and engineering judgment. A single operator can stop beam operations should conditions arise that overly burden him or her.
    - The minimum experimental area staffing must be a Collider-Accelerator Support (CAS) watch person for any RHIC operations with beam (ASE). **Bases:** This requirement assures that there are shift personal to respond to problems in the field outside the MCR. C-AD bases this requirement on experience with many experiments conducted throughout BNL's history with large accelerators. The on-duty CAS watch communicates by radio with the MCR, and the C-AD forwards alarms to the CAS radio. Normally a CAS watch continuously makes rounds of all C-AD facilities.
- Cryogenic Control Room Staffing
    - Cryogenic Control Room: One Cryogenic Shift Supervisor or designee and one qualified Cryogenic Operator must be on watch when the refrigerator operating. One of the two must remain in the Cryogenic Control Room at all times unless the controls in the Cryogenic Control Room relocate to the MCR or unless emergency conditions require actions by all cryogenic-watch standers (ASE). **Bases:** This requirement assures that there are shift personnel to respond to routine problems in the field while one operator normally stays in the Cryogenics Control Room. The C-AD allows an exception when more field operations may be required in an emergency. The C-AD bases this requirement on experience throughout the history of many large accelerators at BNL and experience with the RHIC cryogenic system over the last 10 years.

- Authorized Alternative: If one operator is incapacitated, the remaining operator may continue Collider operations as long as the C-AD meets the operator-staffing requirement within two hours (ASE). **Bases:** Allowing time to replace an incapacitated operator allows operations to continue at the discretion of the remaining operator. The C-AD bases these shift-operating requirements on experience and engineering judgment. A single operator can stop beam operations should conditions arise that overly burden him or her.

- STAR and PHENIX Staffing
  - Watch: A qualified local watch is required when flammable gas is in the PHENIX detector in the IR (ASE). **Bases:** This requirement assures a qualified person is at PHENIX to monitor the safety of the flammable gas system, and to respond to off-normal or emergency conditions.
  - Watch: A qualified local watch is required when flammable gas is in the STAR detector in the IR (ASE). **Bases:** This requirement assures a qualified person at STAR to monitor the safety of the flammable gas system, and to respond to off-normal or emergency conditions.
  - PHENIX Experimental Area: One Experiment Shift Leader is required for experimental operations with beam (ASE). **Bases:** This requirement assures that a qualified person takes charge of all PHENIX equipment when beam is on, coordinates all PHENIX operations, and communicates with the MCR.
  - STAR Experimental Area: One Experiment Shift Leader is required for experimental operations with beam (ASE). **Bases:** This requirement assures a qualified person takes charge of all STAR equipment when beam is on, coordinates all STAR operations, and communicates with the MCR.
- Collider and Experiment Modification and Control
  - C-AD must use approved configuration control procedures to ensure the review of modifications against Credited Controls in the ASE (ASE). **Bases:** This assures that C-AD has a system to review all modifications that potentially could violate the assumptions in the SAD safety analysis, or the ASE requirements.
  - The C-AD must review each Collider experiment for configuration control and safety before running it with beam (ASE). **Bases:** This ensures that C-AD adequately reviews experimental installations and modification before starting operations with beam. These reviews are part of the configuration-management program that ensures that these changes do not involve USIs, and do not violate the ASE requirements.
  - An experiment may lie dormant for longer than one year between runs and not require a review during this dormancy period. For experiments that may run more than once within a 12-month period, a review must occur before each single scheduled run, as determined by the C-AD management (ASE). **Bases:** The annual- or before resumption- operation reviews after an extended shut down ensures that Credited Controls and Supports are operational and that no unapproved modifications were made. If the interval between runs is short with no experiment changes, the C-AD's management may waive the pre-run review.
  - During shutdown periods, when the MCR is not operating, the C-AD must review specific safety requirements for experiments on a case-by-case basis. The C-AD's Experimental Safety Review Committee (ESRC) must perform the review and the C-

AD Chair must approve the experiment (ASE). **Bases:** This ensures there is an adequate review and approval given to experimental configurations that may be unique, depending upon the proposed type of work or testing. This verifies that the intended activity/configuration is safe. Because there are multiple activities and configurations that may occur during shutdown, specific cases are proposed to the C-AD's ESRC Chair and reviewed/approved at an adequate level with sufficient depth to ensure safety.

- The C-AD must document, via the Unreviewed Safety Issue Determination (USID) process, modifications to RHIC and experiments that are determined to increase the frequency or consequences of known hazards, or which introduce new ones. If C-AD identifies a positive USID, the C-AD must not implement the modification without the DOE's approval (ASE). **Bases:** This ensures that the C-AD adequately reviews a modification before initial operations. These reviews are part of the configuration-management program that ensures changes do not involve USIs and do not violate ASE requirements. Further, it assures that no changes occur that could potentially violate the assumptions in the safety analysis. The USID process would document their impacts, and C-AD would obtain the DOE's approval of any required change to the ASE before the changes are affected.

- Beam-loss-induced radiation within uncontrolled areas for credible repeated losses must be less than 100 mrem in a year (ASE). **Bases:** This makes certain that the C-AD does not exceed the DOE's limit of 100 mrem per year to an untrained person, thereby s satisfying the requirements in DOE Order 458.1, Radiation Protection of the Public and the Environment.
- The C-AD must manually test accessible ODH fans and air-inlet louvers semiannually (not to exceed 8 months) (ASE). **Bases:** This test entails manually starting each accessible ODH fan during a maintenance day in the middle of the annual experimental run to ensure that there are no mechanical problems with the fans.
- ODH area classification must comply with the requirements in BNL's SBMS Subject Area, ODH Classification/Controls (ASE). **Bases:** This ensures that the C-AD analyzes and controls oxygen-deficiency hazards in accord with the BNL Subject Area, Oxygen Deficiency Hazards.

5.10.The Bases for Credited Controls for operating the TVDG and TtB

5.10.1.Credited Controls for Maximum Credible Incidents - ASE Limits

The maximum beam current and energy in the TtB is 200 nA DC of 18 MeV deuterons or equivalent (ASE). **Bases:** This limit ensures that C-AD does not have to post the TtB berm for radiation protection, and maintains the dose at that area ALARA. With a minimum of 3 feet of soil shielding over the TtB line, the annual dose to an individual would be well below 25 mrem in a year with a 200 nA beam of 9 MeV/u deuterons hitting an iron target.

The maximum beam current and energy in the TVDG is 4 μA DC, and 30 MeV/u deuterons or equivalent (ASE). **Bases:** The TVDG has a complex, varied capability for producing radiation depending upon the type of ion accelerated. The energies of the accelerated ions are proportional to the charge state achieved by the ions when they undergo stripping within the accelerator tank. Because the TVDG system strips the electrons on light ions to positive

charge-states comparable to their atomic numbers, they achieve a relatively high energy-per-nucleon, and thus, can produce appreciable numbers of fast neutrons and gamma rays when they strike any material. The TVDG system cannot strip heavier ions to charge states comparable to their atomic numbers, and can only attain a relatively low energy-per-nucleon. Such particles do not readily produce nuclear reactions when they strike materials, and so do not produce an appreciable secondary radiation field. The C-AD studied the TVDG radiological controls (interlocks, shielding, fencing, and area postings) for deuteron beams, determining that the radiological controls are adequate to maintain exposures ALARA, and well below the radiation-worker limits. For other ions, the radiological controls provide equivalent or greater protection compared to the maximum deuteron-beam power of 120 watts. The C-AD cannot operate TVDG beyond these Credited Controls without changing its structures, systems, and components (SSCs); doing so requires the C-AD management's authorization.

5.10.2.Credited Controls for Radiation Hazards Due to Access

During operations with beam, an access controls system (ACS) must prevent access to accelerator enclosures (ASE). **Bases:** The ACS is the Credited Control for accelerator enclosures and it prohibits access to the beam; if access is forced, the ACS removes beam. The C-AD uses configuration management to document the design and modification of the ACS. The C-AD Radiation Safety Committee must approve changes that may affect the reliability of the system's safety function.

5.10.3.Credited Controls for Oxygen-Deficiency Hazard

Engineered systems (interlocks and alarms) must be in place to minimize the likelihood of injury/illness from a release of inert gas (ASE). **Bases:** The TVDG's MP Tanks use an inert insulating gas mixture of approximately 45% sulfur hexafluoride, 45% nitrogen, and 10% carbon dioxide with a specific gravity of 2.85 compared to air. This gas supports a higher tank accelerating voltage to inject a higher energy beam into the TtB line. The TVDG's Accelerator Room and Pit, Electrical Equipment Room, Building Basement, Mechanical Equipment Room, and the TtB Tunnel might experience oxygen deficiency if a gas-pressure boundary fails. The C-AD uses engineered controls to protect occupants from oxygen deficiency.

5.10.4.Credited Control Supports to Protect Against Radiation

Before beam operations, all shielding of the accelerator and the beam-line enclosures (berms, shield blocks, and barriers) must properly be in place and configuration-controlled (ASE). **Bases:** The Radiation Safety Checklist is the method used to verify that all shielding assumed in the safety analysis is in place before beam operations begin, thereby ensuring that no excessive radiation exposures occur.

During beam operations of an accelerator, the associated ACS must be functional; this requires the full functionality of those portions of the ACS that prevent exposure to beam radiation inside the enclosures, and remove the beam when excessive beam or beam loss occurs (ASE). **Bases:** The ACS for the TVDG and TtB ensures no exposure to excessive radiation, regardless of the specific ion species in use. The C-AD uses configuration management to design

and modify the ACS. The C-AD Radiation Safety Committee must approve changes that may affect the reliability of the system's safety function.

During beam operations, the area radiation monitors interfaced with the TVDG and TtB ACS, and which remove the beam when there is excessive beam loss, must be within their calibration date (ASE). **Bases:** The operability and placement of radiation monitors interfaced with the ACS ensures that no exposure to excessive radiation from routine beam loss and beam faults occurs. The C-AD does not consider a radiation monitor as operable unless it has a current calibration.

During beam operations, the locations of area radiation monitors interfaced with the ACS must be configuration-controlled (ASE). **Bases:** Configuration control of the ACS radiation monitors makes certain they are properly located so that the sensed dose-rate provides the Control Room operations staff with accurate alarms. Each ACS radiation-monitor has a built-in keep-alive source that enables the ACS to continuously sense and react whenever a monitor disconnects or fails. When the C-AD replaces or adds radiation monitors, the RCTs test them individually using an independent radioactive source to verify that the monitor sends it output signals to the correct readout location.

During operations with the beam, BNL's quarterly environmental TLDs near TVDG and BNL's monthly personnel monitoring TLDs at the TVDG Control Room and Target Rooms must be in place to monitor radiation levels (ASE). **Bases:** The C-AD confirms the appropriateness of the limit for the number and kinetic energy of deuterons, or equivalent for other ions, by reviewing the environmental and area-wide TLD measurements. The C-AD uses these results to endorse the uncontrolled areas on the TtB berm and selected areas in the TVDG Control Room, Target Rooms, and hallways, and to comply with the radiological postings.

5.10.5.Credited Control Supports to Protect Against an ODH

C-AD must ensure the operability of installed oxygen monitors used to alert against the displacement of oxygen by the leakage of insulating gas leaking into potentially occupied areas; must ensure they alarm at oxygen levels below 19.5% (nominal), and must ensure the operability of the automatic ODH Emergency Purge Fan (ASE). **Bases:** The C-AD analyzed oxygen deficiency for the TVDG and TtB, and consequently added controls to reduce the ODH hazards. These included automating the ODH Emergency Purge Fan based on sensing a low oxygen concentration, modifying the ODH Emergency Purge Fan to improve the flow rate of the heavy, inert purge gas, and routing the relief valves in the Mechanical Equipment Room outside it. The C-AD reviewed the following areas to determine the appropriate ODH controls: Accelerator Room and Pit, Electrical Equipment Room, Building Basement, Mechanical Equipment Room, TtB Tunnel, Target Rooms, and the Remote Gas Storage Area. Because hazardous inert gas is heavier than air, then, rather than using BNL's SBMS ODH model of homogenous mixing, the C-AD's calculation appropriately considered the fact that a gas release accumulates in the lower areas of the building.

Authorized Alternatives: The Tandem Supervisor or ESH Coordinator can approve the use of personnel oxygen monitors for each person in a posted ODH area while the installed monitors are out- of-service. If the ODH Emergency Purge Fan is not operable, the following are applicable:

- The Accelerator Room and pit, Electrical Equipment Room, Building Basement, Mechanical Equipment Room, and the TtB Tunnel must be emptied of all unnecessary personnel as soon as practicable.
- During the period that the ODH Emergency Purge Fan is not operable, the Accelerator Room and Pit, Electrical Equipment Room, Building Basement and the TtB Tunnel may be entered provided as each entrant has a 5-minute escape pack (or self-contained breathing apparatus), and a portable oxygen monitor (POM).
- During the period that the ODH Emergency Purge Fan is not operable, gas-transfer operations in the Mechanical Equipment (ME) room may occur for up to 72 hours provided that
    - Each operator in the ME room has a 5-minute escape pack (or self-contained breathing apparatus), and a portable oxygen monitor (POM)
    - An unexposed observer outside the mechanical equipment (ME) room, with no other duties, is responsible for maintaining continuous contact (either visual or aural) with all ME room entrants, and for summoning the BNL Fire/Rescue Group, if needed.

Bases: The ODH analysis showed that only the Accelerator Room and Pit, Electrical Equipment Room, Building Basement, Mechanical Equipment Room, and TtB Tunnel were potential ODH areas. The required PPE and controls depend on whether or not the ODH Emergency Purge Fan is operable, and if gas-transfer operations are in progress in the Mechanical Equipment Room. The Authorized Alternatives detail the increased required controls when the ODH Emergency Exhaust Fan fails. Removing unnecessary personnel reduces the risk of injury or death. While the C-AD will remove personnel, and restore the ODH Emergency Purge Fan as soon as practicable, a portable oxygen monitor (POM) and a 5-minute escape pack (or self-contained breathing apparatus) is just as effective as the installed monitor and alarm system and Emergency Purge Fan. Thus, having each individual use this PPE when entering the posted ODH area has no effect on their risk of exposure to oxygen deficiency. The TVDG Supervisor is responsible for restoring the installed system to operation. The C-AD judged the 72-hour limit on conducting gas-transfer operations insignificantly increases risk because of the use of PPE and the presence of a safety observer during this activity. The 72 hours suffices for a complete cycle of repair to a Tandem MP tank internals, and allows for continued facility operations, especially if the TVDG is supplying both the RHIC and NSRL facilities with ions.

5.10.6.Calibration, Testing, Maintenance, and Inspections that Support Credited Controls

The C-AD must functionally test the Access Controls System (ACS) in accordance with requirements in the BNL Radiological Control Manual (ASE). **Bases:** The BNL Radiological Control Manual requires annual testing of the access controls system, including a functional check of the interlocking area-radiation monitors; demonstrably this is acceptable, based on failure rates and reliability studies of this redundant equipment. The Radiation Controls Division Manager may grant extensions for operational reasons.

Area radiation monitors must undergo annual calibration (not to exceed 15 months) (ASE). **Bases:** The C-AD bases the frequency of radiation-monitor calibration on experience and engineering judgment. The C-AD annually calibrates the radiation monitors used to interlock the accelerator beam off in the event of unexpectedly high-levels of radiation. The C-AD bases the 3-month extension on the mean time to failure (MTTF) to allow operational flexibility for

scheduling and undertaking the calibration. The C-AD does not rely routinely on the extension. The C-AD Radiation Safety Committee Chair and BNL's Radiation Control Division Manager approve extensions.

The TVDG ODH Emergency Purge Fan must undergo annual testing (not to exceed 15 months) (ASE). **Bases:** The annual test ensures the operability of the ODH Emergency Purge Fan. The C-AD bases the 3-month extension on experience and engineering judgment. Failures of this fan are rare. The extension provides for operational flexibility for scheduling and performing the annual test, an extension is rare and C-AD does not use it routinely. The Authorized Alternative, i.e., use of POM and 5-minute escape pack (or self-contained breathing apparatus) provides the same level of protection if the installed fan fails.

The installed oxygen monitors that start the ODH Emergency Purge Fan or provide a local alarm must undergo annual testing (not to exceed 15 months) (ASE). **Bases:** The C-AD used experience and engineering judgment in setting the calibration frequency of the installed oxygen-monitors' calibration, and the 3-month extension that affords operational flexibility in scheduling and testing. No failure records are maintained for these sensors; thus, the C-AD did not quantify the increase in failure during the 3-month extension. The C-AD does not routinely use the extension. The Authorized Alternative; i.e., using POM, provides the same level of protection if the installed system fails; thus, there are no adverse safety effects by employing it.

Radiological shielding and barriers (berms, shield blocks, fencing) must undergo annual visual inspection to ensure that they are in place and functional (ASE). **Bases:** This interval coincides with the annual running period at the C-AD's accelerators. This inspection is part of the facility startup. The C-AD proceduralized the inspection, and operators document it via the Radiation Safety Checklist for each facility. Once operating, periodic radiation dose-rate surveys ensure that the radiation barriers remain in place and are effective. Additionally, the annual environmental TLD program verifies the effectiveness of the shielding and shielding controls. The C-AD bases the 3-month extension on experience and engineering judgment; it provides for operational flexibility for scheduling and performing the inspection. The C-AD does not rely on the extension as routine.

5.10.7.Administrative Controls

While not treated the same as Credited Controls or Supports, administrative controls in this section provide defense-in-depth to help ensure the operational integrity of the Credited Controls during operations. These administrative controls are

- Minimum Main Control Room (MCR), TVDG Control Room, and Experimental Area Staffing Controls
    - C-A MCR: One qualified Operations Coordinator and one qualified operator must be on duty when TtB beam is injecting into the Booster. During normal operations, one of the two operators must remain in the Main Control Room at all times (ASE). **Bases:** The expectation that the MCR be operating during beam operations when the TVDG transports ions to the Booster ensures that staff are monitoring system operations, and that operations comply with the ASE and the requirements of the C-AD operating procedures. Additionally, operators can respond promptly to off-normal conditions and emergencies.

- Authorized Alternative: If one operator is incapacitated, the remaining operator may continue operations as long as the C-AD meets the operations staffing requirements within two hours (ASE). **Bases:** Allowing time to replace an incapacitated operator, allows operations to continue at the discretion of the remaining operator. The C-AD bases these shift staffing requirements on experience and engineering judgment. It is easy to stop beam operations should conditions arise that burden the remaining operator.
- TVDG Control Room: Two qualified individuals are required to operate the MP6 and/or MP7 Tandem accelerators. The Operator-in-Charge must be fully qualified and must be on-duty at the TVDG facility. The second operator is a person judged by the C-AD Pre-Injector Group Leader and TVDG Operations Supervisor, or in their absence, the TVDG Operations Shift Supervisor, to have sufficient knowledge to assist the Operator-in Charge. The second operator must be on-duty at the C-AD complex, and must have radio communication with the Operator-in-Charge on-duty at the TVDG (ASE). **Bases:** The TVDG can be operated locally by qualified individuals as long as the beam is not injected into the Booster where it can be transported to AGS, and then to RHIC or NSRL. TVDG operations are simple enough that two operators can safely control the ion beam down to the end of TtB line before its injection into Booster. Once operators allow the beam to other accelerators, the C-AD has determined that it is prudent to have an Operations Coordinator on duty to coordinate the operations of the entire C-AD facility.
- Authorized Alternative: If the second operator is incapacitated, the Operator-in-Charge may continue Tandem operations as long as TVDG restores operator requirements within two hours (ASE). **Bases:** Allowing time to replace an incapacitated operator, ensures that operations to continue at the discretion of the remaining operator. The C-AD bases these shift staffing requirements on experience and engineering judgment. A single operator can stop beam operations should conditions arise that overly burden the remaining operator.
- The minimum experimental area staffing for local TVDG experiments with beam must be a qualified TVDG operator (ASE). **Bases:** This requirement assures that there are shift persons to respond to problems in the field outside the TVDG Control Room. C-AD bases this requirement on experience with many experiments conducted throughout BNL's history of large accelerators.
- The minimum experimental area staffing for TVDG injection into Booster must be a Collider-Accelerator Support (CAS) Watch (ASE). **Bases:** This requirement assures that there are shift personnel to respond to problems in the field outside the MCR when TVDG ions inject into the Booster and beyond. The C-AD bases this requirement on experience with many accelerators conducted throughout the history of large accelerators at BNL. The on-duty CAS watch communicates by radio with the MCR and the C-AD forwards alarms to the CAS radio. Normally, a CAS watch continuously makes rounds of all C-AD facilities.

- TVDG, TtB and Experiment Modification and Controls
  - Approved configuration control procedures must ensure the review of modifications against Credited Controls in the ASE (ASE). **Bases:** This ensures that C-AD has a

system to review all modifications that potentially could violate the assumptions in the SAD safety analysis, or the ASE requirements.

- The C-AD must review the configuration control and safety of each experiment in the TVDG Target Rooms before running with beam. An experiment may lie dormant for more than a one year between runs, and not require a review during this time. For experiments that may run more than once within 12-months a review must occur before each singular scheduled run (ASE). **Bases:** This ensures that C-AD adequately reviews experimental installations and modifications before initial operations. These reviews are part of the configuration-management program ascertaining that these changes do not involve USIs and do not violate ASE requirements. The annual or before-resumption of operation reviews after an extended shutdown also ensures that Credited Controls and Supports are operational and that C-AD reviewed all modifications.
- If C-AD determines modifications to the TVDG or TtB or Target Room Experiments increase the frequency or consequences of known hazards or introduce new ones, then C-AD must document them via the Unreviewed Safety Issue Determination (USID) process. If a positive USID exists, C-AD must not implement the modification without the DOE's approval (ASE). **Bases:** This ensures that C-AD adequately considers the modification before initial operations. These reviews are part of the configuration-management program ensuring that these changes do not involve USIs and do not violate ASE requirements. Additionally, this makes certain that no changes occur that might violate the assumptions in the SAD safety analysis or the ASE requirements. The USID process documents the impacts of such changes and helps ensure the DOE's approval of a change to the ASE, should it be required, before the changes are in effect.

- Beam- loss-induced radiation within uncontrolled areas for credible repeated losses must be less than 100 mrem in a year. The C-AD shall use BNL's environmental TLD monitors to check the effectiveness of their radiation control program (ASE). **Bases:** This ensures that C-AD does not exceed the DOE's limit of 100 mrem per year to a non-radiation worker, so satisfying the requirements in DOE Order 458.1, Radiation Protection of the Public and the Environment.
- ODH area classification must comply with the requirements in BNL's SBMS Subject Area, ODH Classification/Controls (ASE). **Bases:** This ensures that the C-AD controls oxygen-deficiency hazards according to BNL Subject Area, Oxygen Deficiency Hazards.

5.11. The Bases for Credited Controls for the BLIP- and RRPL-Operations

5.11.1. Credited Controls for Maximum Credible Incidents - ASE Limits

The C-AD cannot exceed the maximum credible beam power of accelerators without changing the structures, systems, and components (SSC), a process that requires authorization by the C-AD management (ASE). **Bases:** The maximum credible beam power is associated with the Credited Controls for radiation hazards.

The Linac sends beam to the BLIP targets. The C-AD gives the basis for the Linac limit in Section 5.7.1, which is 5.6 x 10^{18} GeV in one hour (250 μA). The C-AD does not operate the

BLIP near the Linac's intensity limit, and does not normally post the road outside the BLIP for radiological safety. However, should the C-AD need to increase the beam to BLIP to the Linac's limit, then the C-AD would place appropriate postings along the road to warn personnel about dose rates there, in surrounding areas, and inside the BLIP Building 931.

5.11.2.Credited Controls for Radiation Hazards Due to Emissions

During BLIP beam operations, the C-AD continuously monitors for radioactive airborne emissions (e.g., particulates, tritium and short-lived gaseous activity) anticipated to exceed 0.1 mrem per year to the Maximally Exposed Individual (MEI) (ASE). **Bases:** C-AD continuously monitors BLIP exhaust. It prevents a long operating run from potentially violating 10CFR61 Subpart H.

Authorized Alternative: The C-AD allows unavoidable interruptions of emissions monitoring for up to 10 days as long as the C-AD can use records of integrated beam current obtained from BLIP or Linac, in units of micro-amp hours, to estimate the airborne emissions during this time. The C-AD must take actions to restore to operation the installed continuous monitoring system as soon as practicable (ASE). **Bases:** The radioactive emissions from the BLIP stack are directly proportional to the integrated proton beam to BLIP. The C-AD can use instrumentation at the BLIP or Linac to determine the beam current to the former. Although this alternate method is equivalent to using the stack monitor, the C-AD imposes a 10-day limit on its use to ensure that operations managers assign high priority to repairing a stack monitor.

During beam operations, C-AD requires an operable BLIP-tank hotbox exhaust-ventilation system (ASE). **Bases:** This configuration ensures that BLIP operations do not release radioactive particulates and gases into the occupied BLIP building. It also prevents a ground-level release of the activated exhaust air, and prevents contamination of and internal dose to workers.

TPL Hot Cells, Hot Boxes Radioactive Fume Hoods and their associated ductwork must have negative pressure between these facilities and the room and outdoors to allow target and radioactive materials processing operations (ASE). **Bases:** This configuration ensures that TPL operations do not release radioactive particulates and gases into the occupied TPL, and prevents contamination of and internal dose to workers.

5.11.3.Credited Control Supports to Protect Against Radiation Due to Access

During beam operations, operators must maintain the BLIP tank hotbox doors 1 and 2 locked at all times (ASE). **Bases:** The BLIP hotbox has two locks, a lock owned by the BLIP Operator and one by the BLIP Radiological Controls Group. This ensures that no one can enter the hot box without proper work planning to consider dose and contamination control.

5.11.4.Credited Control Supports to Protect Against Radiation

The Radiation Safety Committee must review proposed significant changes to the Linac beam's characteristics transported to BLIP for effect on safety and for ASE compliance before the change (ASE). **Bases:** This control ensures that the BLIP does not generate excessive airborne radioactivity to cause nuisance dose-rates in the BNL-site areas surrounding the BLIP

stack resulting from effluent down wash. The RSC review also helps minimize the chances of target failure.

The C-AD must ensure that the RRPL shielding (fixed - lead, sand, steel, polyethylene, and moveable - concrete, water, steel) is in place and configuration-controlled (ASE). **Bases:** The C-AD uses procedures to initiate and document the visual verification that all shielding protecting staff from excessive radiation is in place before starting beam operations, so ensuring that no excessive radiation exposures can occur. At Building 801, procedures control the configuration of the RRPL shielding.

The C-AD must ascertain that during beam operations and when irradiated targets are in the hot box, the BLIP shielding (fixed - lead, sand, steel, polyethylene, and moveable - concrete, water, and steel) is in place, and configuration-controlled (ASE). **Bases:** The C-AD uses the completed Radiation Safety Checklist before authorizing operations with beam each year. The checklist documents the visual verification that all shielding assumed in the safety analysis is in place before beam operations start. This ensures that no excessive radiation exposures can occur.

Prior to BLIP beam operations, the C-AD must ensure operable interlocks for the Linac bending magnets, BM1 and BM2, remove the beam when required. Operable means that the C-AD has a calibrated area-radiation monitor interlock, and that each inspection plug limit-switch and at least one of the two BLIP water-level indicators will turn off BM1 and BM2 to remove the beam from Linac to the BLIP. The following must be operable and interlocked: Area radiation monitor 1A, BLIP water-tank-level indicators LLC1 and LLC2, and Inspection plug limit switches IPP1 and IPP2 (ASE). **Bases:** The radiation-safety interlocks remove beam on high room-radiation, low BLIP-tank water level, and if either of the inspection plugs are not fully in position. This ensures the removal of the radiation source causing the radiation-safety problem because the bending magnets that send Linac beam into BLIP-tank turn off. The Radiological Control Division calibrates the radiation detector annually. The BLIP's water-tank-level probes sense a low water level, and initiate their safety function when either probe is dry, viz., about 1 to 1-1/2 feet below normal water level, and well before there is any significant increase in the room's dose-rate. Opening either of the two inspection plugs can increase dose rates. These systems are part of the credited interlock system that removes the beam from the BLIP. Additional defense-in-depth interlocks, such as the Fast Beam Interrupt (FBI) system, protect the machine and help reduce the possibility of high dose-rates in the BLIP room.

The low airflow alarm at BLIP's exhaust ventilation system must be operable to provide an alarm to ensure negative pressure conditions in the BLIP's hot cell (ASE). **Bases:** Negative pressure into the hot cell ensures dispersible radioactive contamination and airborne radioactivity stay within it.

If the C-AD anticipates that BLIP emissions exceed 0.2 mrem per year to the Maximally Exposed Individual (MEI), then they must take actions to ensure operations comply with NESHAP's requirements, including permitting (ASE). **Bases:** The C-AD currently has no stack air-emissions in any areas, with the exception of BLIP, that exceed an MEI of 0.1 mrem/y. Due to improvements in the BLIP stack in 2010, BLIP emissions were permitted by EPA up to 10 mrem per year to the MEI. The ASE ensures that C-AD maintains the actions taken in 2010 to continue to comply with 10CFR61 Subpart H when above 0.2 mrem per year at BLIP.

If the C-AD calculates that the annual activity concentration of sodium-22 in the leachate exceeds 25%, or tritium in the leachate exceed 5% of the Drinking Water Standard, then the C-AD must place a cap over the soil area to protect the groundwater unless BNL's Management

waives the requirement (ASE). **Bases:** This satisfies BNL's Design Practice for Known Beam Loss Locations, and the permanent BNL Waiver 2010-4, and maintains ALARA the potential groundwater contamination caused by activated soil leachate. If the C-AD requires a waiver, then it must be justified to BNL management who must approve it before allowing the change. The major consequence of contaminating groundwater is a loss of credibility with regulators and the public should a major incident occur. In all cases, there is no possibility of anyone ever drinking contaminated water. There are no on-site drinking-water wells in the path of C-AD groundwater plumes. It would take over 20 years for contaminated groundwater to travel beyond BNL's site boundary, which allows time for remediation should a plume be created.

Authorized Alternative: If the C-AD discovers an installed cap to be breached, alternative equivalent protection approved by their management, must be in place within 10 days of the discovery. The C-AD must initiate permanent repair to the cap as soon as practicable (ASE). **Bases:** See Authorized Alternative in Section 5.7.4.

During Target Processing Operations, at least two of the three Building 801 Building Exhaust Fans (BEF-1, BEF-2 and BEF-3) must be operating (ASE). **Bases:** This ensures the maintenance of the known configuration of building exhaust fans to ensure that the exhaust-ventilation-system's ducts and the fume hoods and hot cells/hot boxes are held at a pressure lower than the TPL room. This configuration ensures workers do not become contaminated or receive an internal dose. Future testing may show one fan alone is sufficient to continue safe operations.

During work involving radioactive material in the fume hoods or hot boxes/hot cell within the TPL both exhaust fans, EF-1 and EF-2, must be operating for work in the hot boxes/hot cell (ASE). **Bases:** The two operating exhaust fans ensure that the hot boxes/hot cell maintain a lower pressure than the TPL room, so assuring that workers do not become contaminated or receive an internal dose. Exhaust fans EF-1 and EF-2 are variable speed fans in the B801 filter room that maintain a negative pressure in the exhaust duct from the hot cell/hot boxes. They sense the differential pressure in the duct, and vary their speed to maintain the negative pressure at about the same value.

One exhaust fan (EF-5, EF-6, EF-7 or EF-8) for the fume hood in TPL must be operating (ASE). **Bases:** The operating exhaust fan ensures that the fume hood maintains a lower pressure than the TPL room, so that workers do not become contaminated or receive an internal dose

Authorized Alternatives: Upon discovering that both EF-1 and EF-2 have failed, stop work involving radioactive materials in the hot box/hot cells. Upon finding that only one exhaust fan, EF-1 or EF-2, is operational, impose the following restrictions while work involving radioactive materials continues in the fume hoods, hot box/hot cells:

- Opening a hotbox door is allowed under approved operating procedures, which include the requirement that the hot box/hot cell auxiliary exhaust blower is on
- Normal use of the hotbox portals in the fume hood is allowed provided that one fume hood's fan (EF-5, EF-6, EF-7 or EF-8) is functioning
- Opening of the hot box/hot cell doors or clamshell portal is allowed if undertaken with approved work planning and the TPL Supervisor's approval

Bases: If both of fans EF-1 and EF-2 are off, then the ventilation system can no longer assure a safe negative pressure in the exhaust line and the hot cell/hot boxes. The new Building Exhaust Fans BEF-1, BEF-2 and BEF-3 may be sufficient to continue work safely, but until this configuration is tested, the C-AD assumes that the Building Exhaust Fans alone have insufficient

capacity to allow the safe continuation of work. The Authorized Alternatives provide safe conditions to continue work with radioactive material in the fume hoods or hot boxes/hot cell within the TPL. Experience shows a single fan, EF-1 or EF-2, maintains safe negative pressure. The fume hood normally is exhausted by one of four possible exhaust fans in the B801 filter room (EF-5, EF-6, EF-7 or EF-8). The C-AD measures the exhaust flows from the TPL hot cell, each hot box, and the fume hood, and each exhaust flow rate has a nominal value. An operational alarm sounds if the flow rate exceeds ±20 percent of its nominal value, informing the operators that there is a potential problem. It is still adequate to maintain proper conditions to prevent leakage of radioactive particulates or gases from these spaces. In addition, there air monitors at four locations surrounding the fume hood and hot cell/hot boxes that sense gaseous and particulate activity and alarm if levels are high. Finally, each TPL worker receives an annual whole-body count verifying that radiological controls adequately protect him or her. C-AD considers the low-flow alarm, the air monitor, and the whole-body counting program defense-in-depth to ensure that work is safe in the TPL. The work planning and approval by the TPL Supervisor to open the barriers into the hot cell/ hot boxes ensures that all safety steps are in place, and approved by line management before this work begins.

5.11.5.Calibration, Testing, Maintenance, and Inspections that Support Credited Controls

The calibration, testing, maintenance or inspections needed to support Credited Controls are as follows. See Section 5.7.6 for the bases of the following ASE requirements.

- The BLIP interlock system that removes beam by turning off Linac bending magnets, BM1 and BM2, must be functionally tested in accordance with requirements in the BNL Radiological Control Manual or, following a longer shutdown period, before starting beam operations
- Area radiation monitors must undergo annual calibration (not to exceed 15 months)
- Radiological shielding and barriers at BLIP and RRPL must undergo annual visual inspection to ensure that they are in place and functional, or, following a longer shutdown period, prior to starting any work involving radioactive materials

The RRPL ventilation exhaust system must be functionally tested annually (not to exceed 15 months) or, following a longer shutdown period, before initiating any work involving radioactive materials (ASE). **Bases:** Although this system operates at all times, thus continuously demonstrating that it operable, documenting a test of all configurations and recording results ensures this further. The C-AD allows testing in discrete portions as long as the tests cover the entire system once per year.

The low airflow alarm for the BLIP tank hotbox exhaust-ventilation-system must undergo an annual functional check (not to exceed 15 months) (ASE). **Bases:** The C-AD recently tested the BLIP hotbox ventilation alarm to verify that this functional test is adequate. The exhaust fan has a variable speed motor. The alarm sounded at ~20 Hz fan motor frequency and ~150 CFM. As a defense-in-depth, the Fast Beam Interrupt system removed the beam, which is a machine-protection and defense-in-depth system for safety. BNL's F&O set the motor controller to a minimum frequency of 33.8 Hz for ~265 CFM. Normal fan speed is set at 60 Hz, which corresponds to ~490 CFM.

A smoke test to verify that the TPL fume hoods and hot/box/hot cells are maintained at a negative pressure when the nominal exhaust flow rates from each of these containments are at

nominal flow shall be completed on an annual basis or, following a longer shutdown period, prior to any work involving radioactive materials (ASE). **Bases:** This qualitative test verifies that the fume hood and hot cells/hot box are at a negative pressure relative to the TPL room. The C-AD tested this method with only one of the two exhaust fans (EF-1 and EF-2) operating, and the smoke test showed significant suction of the released smoke into the hot cell/hot boxes. The single fan caused the exhaust flows from the hot cell/hot boxes to drop to 68% to 82% of the nominal flow when both fans were on.

Rainwater barriers for activated soil must be inspected visually each year to ensure that they are in place and functional (ASE). **Bases:** Experience revealed that annual inspections are adequate to disclose problems with impermeable caps. The C-AD has not experienced any significant cap failures that resulted in groundwater contamination since this program started over 10 years ago. This inspection interval coincides with the annual operating periods for the C-AD facilities. The C-AD performs the inspection during the annual shutdown of the accelerators before operations begin.

The C-AD must visually inspect the rainwater barriers for the BLIP-spur activated soil areas twice in 12-months (not to exceed 8 months) (ASE). **Bases:** The basis for this inspection interval is a documented agreement. See the Memorandum of Understanding, BLIP and g-2 Cap Inspection Process dated June 25, 2007, and Record of Decision for Area of Concern 16T g-2 Tritium Source Area and Groundwater Plume, Area of Concern 16K Brookhaven Linac Isotope Producer and Area of Concern 12 Former Underground Storage Tanks dated April 6, 2007. The entire inspection process became the responsibility of the C-AD in October 2010 when BNL transferred the BLIP to C-AD. The ROD requires visual inspections of the g-2 and BLIP source area cap at a frequency of at least twice per year; there is no specified interval between these inspections. The C-AD based the 2-month extension on experience and engineering judgment to provide for operational flexibility for scheduling and performing the inspections. The C-AD does not rely routinely on the extension. If the two-month extension extends to eight months for the first inspection, then the second inspection must be in the next twelve-month period.

5.11.6.Administrative Controls

While not treated the same as Credited Controls or Supports, administrative controls in this section provide defense-in-depth to help ensure the operational integrity of the Credited Controls during operations. These administrative controls are as follows.

The C-AD must maintain environmental monitoring systems for BLIP's airborne emissions per BNL's SBMS requirements (ASE). **Bases:** The C-AD monitors BLIP emissions by meeting ANSI requirements for stack design and monitoring. This avoids the possibility of violating the EPA requirements.

The C-AD must use approved configuration control procedures to review modifications of the BLIP systems and its targets, the RRPL systems, or the BLIP's beam current against ASE requirements (ASE). **Bases:** This ensures that C-AD has a system to review all modifications that could potentially violate the assumptions in the SAD safety analysis, or in the ASE requirements.

The C-AD must review each BLIP experiment and/or significant change in target design for safety before running BLIP with the beam (ASE). **Bases:** This ensures the adequate review of experimental installations and modification before initial operations. These reviews are part of

the configuration-management program guaranteeing that these changes do not involve USIs and do not violate ASE requirements.

The C-AD must document modifications to BLIP or RRPL determined to increase the frequency or consequences of known hazards, or which introduce new ones, using the Unreviewed Safety Issue Determination (USID) process. The C-AD may not implement the modification if a positive USID without the DOE's approval (ASE). **Bases:** This ensures adequate review of modification before initial operations. These reviews are part of the configuration-management program that ensures changes do not involve USIs, do not violate the ASE requirements, and do not potentially violate the assumptions in the safety analysis. The USID process would document the impacts of such changes, and would ensure the DOEs approval of a change to the ASE, should it be required, before the changes go into effect.

Beam-loss induced radiation within uncontrolled areas for credible repeated losses must be less than 100 mrem in a year. The C-AD shall use BNL's environmental TLD monitors to check the effectiveness of the C-AD radiation control program (ASE). **Bases:** The C-AD uses this control so as not to exceed the DOE's limit of 100 mrem per year to anon-radiation worker. This satisfies the requirements in DOE Order 458.1, Radiation Protection of the Public and the Environment.

5.12.The Bases for Credited Controls for NSRL Operations

5.12.1.Credited Controls for Maximum Credible Incidents - ASE Limits

The C-AD uses Credited Controls for NSRL operations to protect the environment, workers, and the public and ensure that those operations stay within the assumptions in the C-AD SAD safety analysis. Credited Controls for NSRL operations are as follows.

For the NSRL, the annual limit on the number and kinetic energy of high-energy nucleons extracted from the Booster slow-extracted beam (SEB) system is no greater than 10^{17} GeV in one year (ASE). **Bases:** The C-AD assumed this bounding annual particle-energy limit in all NSRL dose- and dose-rate calculations in the safety analysis, thereby maintaining the dose to surrounding un-controlled areas to less than 25 mrem in one year.

The hourly limit on the number and kinetic energy of high-energy nucleons extracted from the Booster slow-extraction system is no greater than $6x10^{14}$ GeV in one hour (ASE). **Bases:** The C-AD assumed this bounding hourly particle-energy limit in the SAD for all NSRL dose- and dose-rate calculations, so keeping the dose rate at the end of the Target Room labyrinth in B958 to less than 1 mrem/h.

The hourly limit on the number and kinetic energy of high-energy nucleons entering the NSRL Target Room and beam stop is no greater than $6x10^{14}$ GeV in one hour (ASE). **Bases:** The C-AD assumed this bounding hourly particle-energy annual limit in the SAD for all NSRL's dose- and dose-rate calculations, so maintaining the dose rate at the top of the NSRL berm at the beam dump to less than 5 mrem/h.

The annual limit on the number and kinetic energy of high-energy nucleons on the NSRL's beam stop is no greater than $3x10^{16}$ GeV in one year (ASE). **Bases:** The C-AD assumed this bounding annual particle-energy limit for all NSRL dose- and dose-rate calculations in the SAD. This maintains the dose to surrounding un-controlled areas to much less than 25 mrem in one year.

5.12.2.Credited Control for Radiation Hazards Due to Access

During beam operations, an access control system must prevent access to beam (ASE). **Bases:** The ACS is the Credited Control that prohibits access to accelerator enclosures during operations with beam; if access is forced, the ACS removes beam. The design of the access-controls system is fail-safe and configuration-controlled. The C-AD Radiation Safety Committee approves any changes that may affect the reliability of the system's safety function.

5.12.3.Credited Control Supports to Protect Against Radiation

The C-AD protects groundwater by using a soil cap over activated soil shielding if the calculated annual activity concentration of sodium-22 in leachate exceeds 25%, or tritium in leachate exceeds 5% of the Drinking Water Standard. BNL's management may waive a cap requirement (ASE). Section 5.7.4 gives the **Bases** for this Credited Control Support and the following, which are similar to Supports listed in Section 5.7.4.

- Authorized Alternative: If the C-AD discovers a breach in an installed cap, the alternative equivalent protection, approved by their management, must be in place within 10 days of discovery (ASE)
- Before beam operations, the beam-line enclosures must have all shielding (berms, shield blocks, and fencing) properly in place and configuration-controlled (ASE)
- During beam operations at the NSRL, the associated ACS must be functional. This means that the portions of the ACS that prevent exposure to beam radiation inside enclosures and that remove the beam when excessive beam loss occurs are functional (ASE)
- During beam operations at the NSRL, the area radiation monitors interfaced with the ACS to remove beam when they sense excessive beam loss must be within their calibration date (ASE)
- During beam operations, the locations of area radiation monitors interfaced with the ACS must be configuration-controlled (ASE)

During operations with beam, BNL's quarterly environmental TLDs near NSRL and BNL's monthly personnel monitoring TLDs at the entrance to Building 958 must be in place to monitor radiation levels to maintain these areas uncontrolled (ASE). **Bases:** The annual limit on the number and kinetic energy of high-energy nucleons on the NSRL beam stop must be no greater than $3x10^{16}$ GeV in one year. The C-AD checks this parameter using beam instrumentation and a procedure, and validates this level on the dump by ensuring the uncontrolled areas near the beam stop, dump, and Target Room at NSRL are less than 25 mrem in one year above background. This annual dose is the basis of the shielding for these areas and thus, the basis for the annual particle-energy limit on the beam-stop.

5.12.4.Calibration, Testing, Maintenance, and Inspections that Support Credited Controls

The calibration, testing, maintenance or inspections needed to support Credited Controls are as follows. Section 5.7.6 details the **Bases** for the following ASE Credited Control Supports, which are similar to Supports listed in Section 5.7.6.

- The C-AD must functionally test the ACS in accordance with requirements in the BNL Radiation Control Manual (ASE)
- Area-radiation monitors must undergo annual calibration (not to exceed 15 months) (ASE)
- Radiological shielding and barriers (berms, shield blocks, fencing) must undergo visual inspection before operations to ensure that they are in place and functional (ASE)
- Rainwater barriers for activated soil must undergo annual visual inspections to ensure that they are in place and functional (ASE)

Target Room and Support Building ventilation exhaust fans must undergo annual testing and testing must not to exceed 15 months (ASE). **Bases:** The Target Room's fan is always operating. This test verifies its operability and ensures that the dose to a person who remains in the Target Room for 60 minutes following 8 hours of NSRL's beam operations with the fan off is ALARA (~0.12 mrem). This level is well below any need to mitigate the dose. The C-AD uses the Support Building fans to minimize animal odors and to help minimize the buildup of CO_2 concentration in the building after an accidental release of carbon dioxide from the stored CO_2 cylinders used in the Cell Rooms.

5.12.5.Administrative Controls

While not treated as Credited Controls or Supports identified in the ASE, administrative controls provide defense-in-depth to help ensure the operational integrity of all controls during operations. For NSRL, these administrative controls are

- Minimum Main Control Room (MCR) and Experimental Area Staffing Controls (See Section 5.7.7 for the **Bases** of similar controls)
    - C-A Main Control Room: One qualified Operations Coordinator and one qualified operator must be on duty when NSRL's beam is in operation. During normal operations, one of the two must remain in the Main Control Room at all times (ASE)
    - Authorized Alternative: If one operator is incapacitated, the remaining operator may continue operations as long as C-AD restores staffing requirements within two hours (ASE)

The minimum NSRL experimental area staffing must be a qualified Collider Accelerator Support (CAS) watch person for operations with beam (ASE). **Bases:** This requirement assures that there are shift personal to respond to problems in the field outside the MCR. The C-AD bases this on experience with many experiments conducted throughout the history of large accelerators at BNL.

The minimum NSRL staffing at Building 958 must be a qualified NSRL operator for the NSRL's Target Room operations with beam. This requirement assures that there is an experienced person ensuring the correct amount of beam on targets at the NSRL facility during operations with beam.

- Facility and Experiment Modification and Controls (See Section 5.7.7 for the **Bases** of similar controls)
    - Approved configuration control procedures must ensure a review of modifications against Credited Controls in the ASE requirements (ASE)
    - The C-AD must review each experiment in the NSRL Target Room for configuration control and safety before running with beam. The C-AD may let an experiment lie dormant for longer than one year between runs and not require a review during the

dormancy period. For experiments that may run more than once within 12-months, review must occur as determined by C-AD's management before each singular scheduled run (ASE)

- The C-AD must document modifications that are determined to increase the frequency or consequences of known hazards or which introduce new ones, using the Unreviewed Safety Issue Determination (USID) process. If C-AD identifies a positive USID, then the C-AD must not implement the modification without the DOE's approval (ASE)
- Beam-loss-induced radiation within uncontrolled areas for credible repeated losses must be less than 100 mrem in a year. The C-AD shall use BNL's environmental TLD monitors to check the effectiveness of their radiation-control program (ASE)

As a best practice, the NSRL's Support Laboratories Class II Type A biological-safety-cabinet (BSC) HEPA-filter efficiency and cabinet face-velocity-tests must be performed *in situ* at the time of installation, at any time the BSC is moved, and at least annually thereafter, and must not exceed 15 months. If these tests are not current, the C-AD must not use the associated BSC until completion of successful testing (ASE). **Bases:** This best practice conservatively complies with the requirements for HEPA filter testing for biological safety indicated by Centers for Disease Control and Prevention. The C-AD bases the 3-month extension on experience and engineering judgment, allowing it for operational flexibility for scheduling and performing the inspection. The C-AD does not rely on the extension as routine practice. HEPA filter efficiency slowly increases over time as the filter builds up a layer of particulates.

5.13.Reference Documents for the Bases for Credited Controls

Aside from the safety analyses and references in Chapter 4, C-AD used the following reference documents to help formulate the bases for ASE limits and controls.

- 10 CFR 835, Operational Radiation Protection
- American Industrial Hygiene Association, Emergency Response Planning Guidelines
- BNL Radiological Control Manual
- BNL SBMS Accelerator Safety Subject Area, Design Practice for Known Beam Loss Locations
- DOE 420.1B, Facility Safety, Chapter II Fire Safety and Chapter IV Natural Phenomena Hazards Mitigation
- DOE Guide G 420.2B-1, Accelerator Facility Safety Implementation Guide for DOE O 420.2B, Safety of Accelerator Facilities, July 2005.
- DOE Order 420.2B, Safety of Accelerator Facilities, July 2004, and its successor Order
- DOE-STD-1020-2002, Natural Phenomena Hazards Design and Evaluation Criteria for Department of Energy Facilities, January 2002.
- EPA Protective Action Guide 400-R-92-001
- SBMS Subject Area: Oxygen Deficiency Hazards (ODH), System Classification and Controls

6.Chapter Six, Quality Assurance

Table of Contents

6. Chapter Six, Quality Assurance 1
6.1. Management Program 1
6.2. Personnel Training and Qualifications 2
6.3. Quality Improvement 2
6.4. Documents and Records 3
6.5. Work Process 3
6.6. Design 4
6.7. Procurement 4
6.8. Inspection and Acceptance Testing 5
6.9. Management Assessment 5
6.10. Independent Assessment 6
6.11. Safety Software and Cyber Security for Safety Systems 6

6.1. Management Program

The Collider-Accelerator (C-A) Department adopted, in its entirety, the BNL Quality Assurance Program. This QA Program describes how BNL's various management-system processes and functions provide a sound approach that conforms to the basic requirements defined in the Contractors Requirements Document in the DOE Order 414.1D, Quality Assurance, or its successor documents.

The quality program embodies the concept of the "graded approach," i.e., the selecting and applying appropriate technical- and administrative-controls to work activities, equipment, and items commensurate with the associated environment, safety- and health-risks, and programmatic impact. The graded approach does not allow C-AD to ignore or waive internal- or external-requirements, but permits variations in the number of controls, the extent of verification, and documentation to meet requirements based on environment-, safety- and health-risks, and programmatic issues.

The C-AD implements BNL's QA Program using the C-AD QA implementing procedures. These procedures supplement the BNL Standards Based Management System (SBMS) documents for those QA processes unique to the C-AD. The C-AD QA Manager maintains QA procedures in Chapter 13 of the C-AD Operations Procedures Manual.

The C-AD QA's philosophy of adopting BNL's Quality Program and developing departmental procedures for implementing quality processes within the Department ensures that complying with requirements is an integral part of the design, procurement, fabrication, construction, maintenance and operation of the C-AD complex.

The C-AD assigns a Quality Representative to serve as a focal point to assist C-AD's management in establishing the QA program requirements. This Representative has authority, unlimited organizational- and facility-access, as personnel safety and training allows, and the organizational freedom to do the following:

- Assist line managers in identifying potential- and actual-problems that could degrade the quality of a process/item or work performance
- Recommend corrective actions

- Verify the implementation of approved solutions

All C-AD personnel can consult with the Quality Representative and seek guidance on quality-related matters.

To meet requirements in the Contractors Requirements Document (CRD) in DOE Order 414.1D, the C-AD uses procedures in C-AD OPM Chapter 1, "Policies for Authorization, Training, Environment, Safety, Procedures, Minors, Visitors," and in C-AD OPM Chapter 2, "Conduct of Operations, Control Room Activities, LOTO, Maintenance, Work Planning." These procedures establish an organizational structure, functional responsibilities, levels of authority, and interfaces for those managing, performing, and assessing work at the C-AD. Chapter 2 establishes the management processes, including planning, scheduling, and providing resources for work.

6.2. Personnel Training and Qualifications

BNL's Training and Qualification Management System within the Standards Based Management System (SBMS) supports the C-AD management in ensuring that personnel working within the complex train and qualify before they carry out their assigned responsibilities. The C-AD implements the BNL Training and Qualification Management System (BTMS) within the Department using the C-AD Training and Qualification Plan of Agreement in C-AD OPM Chapter 1.

C-AD trains and qualifies personnel to be able to undertake their assigned work, and offers continuing training to them to maintain proficiency in their job; C-AD details these training and qualification procedures in C-AD OPM Chapter 1.

6.3. Quality Improvement

The BNL Quality Management System, supplemented by C-AD procedures, sets out the requirements for identifying, documenting, and dealing with non-conformances, and for establishing appropriate corrective- and preventive-actions based on identified causes. BNL's Quality Management System offers guidance for trending non-conformances to recognize recurring-, generic-, or long-term-problems. The C-AD uses this to identify, control, and correct items, services, and processes that do not meet established requirements.

The C-AD initiates quality improvement based on evaluating the seriousness of a non-conformance, and its adverse impact on cost, schedule, safety, and the environment relative to the cost and difficulty of correcting it. In some cases, corrective action may not be feasible, and C-AD implements equivalent protections and requests a waiver from the specific requirement.

The C-AD's Self Assessment Program provides information on its scientific-, business-, and operational-performance for C-AD's management, staff, customers, stakeholders, and regulators. The self-assessment program also serves as a means for improving the rules that govern training and qualifications, documents and records, the work process, design, procurement, inspection and testing, and the assessment itself. It evaluates performance relative to critical outcomes and internal performance objectives to identify strengths and opportunities for improvements within the Department.

The C-AD relies on critiques to pinpoint the causes of problems, and focuses on preventing their recurrence as a part of a corrective-action determination process. C-AD uses internal QA assessments to review item characteristics, process implementation, and other quality-related information to ascertain those items, services, and processes needing improvement.

6.4. Documents and Records

The BNL Records Management System and controlled document Subject Areas within the SBMS, supplemented by the C-AD's procedures in OPM Chapter 13, state the requirements and offer guidance for developing, reviewing, approving, controlling, and maintaining documents and records.

The C-AD's documents encompass technical information and/or instructions that address important work tasks, and describe complex- or hazardous-operations. They include plans, procedures, instructions, drawings, specifications, standards, and reports.

The C-AD's records are information of any kind and in any form, created, received, and maintained as evidence of functions, policies, decisions, procedures, operations, or other activities performed within the Department. Records are retrievable to use in assessing acceptability, and verifying compliance with requirements. C-AD protects records against damage, deterioration, or loss.

6.5. Work Process

The C-AD undertakes its work by meeting requirements in BNL's SBMS. This work is consistent with technical standards, administrative controls, and hazard controls adopted to meet regulatory or contractual requirements via approved instructions and procedures. The C-AD's management determined that it is germane to develop Department-level procedures and instructions to supplement the SBMS Subject Areas. The C-AD's procedures include the requirements in the BNL Subject Areas.

The C-AD's Group Leaders and Technical Supervisors take responsibility for ensuring that the BNL workers under their supervision have the proper job knowledge, skills, equipment, and resources necessary to accomplish their tasks. Further, they assume responsibility for contractors and vendors working directly for the C-AD's supervisors and ensure they also have the relevant job knowledge, skills, equipment, and resources needed to complete their tasks.

BNL's Quality Management System, supplemented by the C-AD's procedures, details the processes for identifying and controlling items and materials to ensure they are properly used and maintained to prevent their damage, loss, or deterioration.

The C-AD management identified those processes requiring calibrated measuring and testing equipment. The C-AD specifies the item identification and control requirements, when necessary, in suitable documents, e.g., drawings, specifications, and instructions. The Department controls materials undergoing tests or inspections to avoid the commingling of acceptable items with ones of unknown origin or history, thus avoiding their inadvertent use.

The C-AD management delegates authority to all C-AD personnel to "Stop Work" to avoid unsafe work practices.

6.6.Design

The C-AD staff plans, develops, defines, and controls the design of the C-AD complex in a manner that assures the consistent achievement of its objectives for productivity, performance, safety and health, environmental protection, reliability, maintainability, and availability. Planning establishes the milestones for the preparation, review, approval, and release of design criteria, standards, specifications, drawings and other design documents.

The C-AD bases their designs of items and processes on sound engineering/scientific principles and appropriate standards. The C-AD defines the appropriate codes, standards and practices for materials, fabrication, construction, testing, and processes in the design documentation. Where feasible, the C-AD adheres to nationally recognized codes, standards, and practices. When those are either overly restrictive, or fall short of defining the requirements, they are modified, supplemented, or replaced by BNL's specifications.

The C-AD incorporates the applicable requirements and design bases in design work and design changes during safety reviews and design reviews. C-AD manages the safety review processes using procedures in OPM Chapter 9, and the design review process in OPM Chapter 13. The latter process identifies and controls design interfaces, and verifies/validates the adequacy of design products using individuals or groups other than those who perform the work. The safety review process verifies/validates work against the ASE- and other ESH-requirements before approving and implementing the design.

The C-AD uses specifications, drawings, and other design documents to represent verifiable engineering delineations, in pictorial and/or descriptive language, of parts, components, and assemblies in their complex. These documents are prepared, reviewed, approved, and released in accordance with C-AD procedures; changes to these documents conform to the C-AD's configuration management procedures.

6.7. Procurement

C-AD procures items and services that meet established requirements and specified performances; C-AD- and BNL-specified criteria dictate the evaluation and selection of prospective suppliers. Personnel responsible for the design or performance of items or services ensure that the procurement requirements of a purchase request are clear and complete. The C-AD and BNL employ the graded approach to appraise potential suppliers of critical, complex, or costly items or services. They use predetermined criteria to ascertain that suppliers have the capability to provide items or services that conform to the technical- and quality-requirements of the procurement. This determination includes reviewing the supplier's history with BNL or other DOE facilities, or a pre-award survey of the supplier's facility. C-AD personnel ensure that the goods or services the suppliers provide are acceptable for intended use. These established practices ensure that approved suppliers continue to furnish acceptable items and services.

6.8. Inspection and Acceptance Testing

BNL and the C-AD inspect and test specified items, services, and processes using established acceptance and performance criteria. Additionally, the C-AD calibrates and maintains equipment used for inspections and tests.

BNL's Quality Management System within the SBMS, supplemented by C-AD's procedures, have processes for inspecting and acceptance testing of an item, service, or process against established criteria that affords a means of determining acceptability. Based on the graded approach, the C-AD determines the need and/or degree of inspection and acceptance testing during the activity/item design stage. Inspection/test planning has an objective, viz., the prompt detection of nonconformance that could adversely affect performance, safety, reliability, schedules, or costs.

When required, C-AD develops acceptance and performance criteria and documents it for key-, complex-, or critical-inspections/tests. The C-AD identifies non-conforming items to avoid their inadvertent use, specifying their status of inspection and testing, either on the items or on documentation traceable to them. BNL's Calibration Subject Area, supplemented by the C-AD procedures, describes the calibration process for measuring and testing equipment. The C-AD's management identifies equipment that requires calibrating. The calibration status is readily discernible, and C-AD prepares and maintains the associated procedures, documentation, and records. The C-AD both protects and maintains calibrated equipment to preclude damage that could invalidate its accuracy while identifying and evaluating the impact of all measuring and test equipment found out-of-calibration.

6.9. Management Assessment

The C-AD ensures that its department managers assess their management processes, and identify and correct problems that hinder their organization from achieving its objectives. The managers of the C-AD Divisions periodically evaluate or "self-assess" the effectiveness of the C-AD organization and present their report to senior management. Through this C-AD Self-Assessment Program, a regular, systematic evaluation process was established wherein the C-AD grades their internal management systems and processes and uses it to make fact-based decisions. See C-AD Internal Assessments. The C-AD Self-Assessment Program includes

- Accelerator Readiness Reviews
- Compliance checks
- Critiques
- Effectiveness evaluations
- Facility Risk Assessments
- Hazard and compliance inspections
- Job Risk Assessments
- Job Training Assessments
- Manager and supervisor work observations
- Operational Readiness Reviews
- Procedure assessments
- Performance tracking

- Worker feedback meetings

The C-AD uses these programs to distinguish strengths and opportunities for improvement. The C-AD documents the assessment results, assigns action items and responsible persons, and supplies valuable input to managers and the business-planning process.

Each year, the C-AD managers review the Department's Environment Management System and Occupational Safety and Health (OSH) Management System and associated activities. In addition, third-party registrars, and Federal-, New York State- and County-agencies assess C-AD activities. Together, these elements provide comprehensive, objective information that serves the C-AD management in establishing strategic direction and in improving environmental and OSH performance.

6.10.Independent Assessment

The C-AD plans and conducts independent assessments to measure the quality of items and services, and the adequacy of work performance in order to promote improvements. There is sufficient authority and freedom from line management for the independent assessment teams. The C-AD ensures that persons conducting independent assessments are technically qualified and knowledgeable in the areas assessed.

Using a graded approach, the C-AD's management periodically evaluates the implementation of the BNL Management Systems, SBMS Subject Areas, and C-AD-specific processes. The C-AD's QA Group and consultants review operations, past assessments, and evaluate the safety- and quality-cultures in terms of the adequacy and effectiveness of the management structure. These assessments include, but are not limited to, environment, safety and health, quality, conduct of operations, and training programs at the department level.

Individuals verifying these activities have sufficient authority to access work areas, and the organizational freedom to accomplish the following: identify problems, initiate, recommend, or provide solutions to problems through designated channels, and verify the implementation of these solutions.

The C-AD plans assessments and conducts those assessments using established criteria. C-AD bases the type and frequency of assessments on the status, complexity, and importance of the particular work or process. The results are documented, non-conformances and recommendations identified, and presented to the C-A Department's management. The Department develops corrective actions to assure improvements. The C-AD tracks actions to closure in the Family version of the BNL Assessment Tracking System (Family ATS). Those conducting independent assessments are technically qualified and knowledgeable in the areas assessed, and independent from the activities assessed. C-AD may invite subject-matter experts to these assessments to give insights into a particular area.

In addition, C-AD uses peer-review, a monitoring process, to evaluate the quality, productivity, and relevance of the science and technology programs. In the arenas of operation and environment, safety and health, the C-AD uses peer-review to assess and independently verify engineering design and operational implementation.

6.11.Safety Software and Cyber Security for Safety Systems

The C-AD adheres to BNL's SBMS for requirements on safety-related software including specification, acquisition, design, development, verification and validation, inspection and test, configuration management, maintenance, and retirement. The C-AD identifies, documents, and maintains a safety-related software inventory and uses the SBMS-established grading levels for safety-related software.

Using those levels, the C-AD selects and implements their safety-related software requirements from the following list to ensure that the software performs its intended functions:

- Software project management and quality planning
- Software risk management
- Software configuration management
- Procurement and supplier management
- Software requirements identification and management
- Software design and implementation
- Software safety
- Verification and validation
- Problem reporting and corrective action
- Training of personnel in designing, developing, using , and evaluating safety software

The ACS is a safety system that incorporates the C-AD's networks and network software. To implement cyber-security on these networks in order to prevent the introduction of malware, which is harmful software such as viruses or Trojans designed to cause damage or disruption to a computer system, the C-AD implements

- Configuration control of C-AD network-enabled devices
- Configuration control of Windows, Apple, Linux, and Unix systems
- Firewalls to isolated networks
- Approval requirements for new devices on the C-AD's networks to adhere to cyber-security requirements
- Approval requirements for the C-AD's cyber-security variances

For authorizing work and for work on isolated network systems the C-AD requires their Cyber Security Administrator (CSA) and Cyber Security Officer (CSO) to be trained in basic computer security courses offered by the SANS (System-Administration, Audit, Network, Security) Organization, or the equivalent.

The CSA advises all C-AD Groups on matters associated with the C-AD's management of cyber-security requirements. The CSO independently assures the CSA and the C-AD Chair that he/she completed an analysis commensurate with the potential cyber-security threats involved, and that a network or network device can function without undue risk to other C-AD or BNL networks.

The CSO assists the C-AD Division Managers and Group Leaders who request a review of a specific cyber-security issue. The CSO reviews and approves proposed changes or modifications to the C-AD's existing networks and network devices as per OPM procedures, and authorizes new networks and new network devices. The CSO ensures the implementation of basic cyber-security on networks and network devices, or ensures they operate under an approved C-AD and BNL variance.

7. Chapter Seven, Decommissioning, and Decontamination Plan

Table of Contents

7.Chapter Seven, Decommissioning, and Decontamination Plan.....1
7.1.Introduction.....1
7.2.Baseline Conditions 2
7.3.End Point Goals 3
7.4.Regulatory Requirements.....3
7.5.Decommissioning Methods 4
7.6.Waste Streams.....4

7.1. Introduction

The C-AD plans to develop decommissioning plans for each accelerator and accelerator facility near the end of their operating lifetime. At that time, C-AD will determine the hazards and risks associated with decommissioning, and the activities required to complete it. Of the utmost importance in formulating these plans is ensuring the safety of the workers, protecting the public and the environment, and complying with the applicable state-, local-, and federal-regulations. Key to safe decommissioning is managing the wastes from operations, or other hazardous materials that might remain in the facility after shutdown, as well as those wastes generated during decommissioning itself. Therefore, an approach to establishing the baseline that accurately identifies the types and quantities of these materials is an important aspect of decommissioning planning.

In the decommissioning plan, the C-AD will determine the final site configuration or end-point for each accelerator or accelerator facility. Determining the desired endpoint for each one, and the risks present is essential to planning. The preferred final decommissioning alternative is the Greenfield condition, but the C-AD will evaluate the following four alternatives at final shutdown:

- Re-use for a similar function
- Safe storage
- Brownfield condition
- Greenfield condition

C-AD assumes federal control will remain in place for several years after decommissioning.

Once the C-AD determines baseline conditions and understands the volumes of waste and end-points, then they will select the methods of accomplishing the decommissioning so to meet the end-point goals. All C-AD facilities currently have similar waste streams; however, the TPL has the greatest amount of dispersible activation-products. Only the volumes of the waste materials and the percent activation vary between the accelerators and accelerator facilities. The sources of their differences in activation levels are beam intensity, targets, and predominant species of particles accelerated. All accelerator facilities have recyclable steel, recyclable copper cabling, clean concrete wastes, and miscellaneous clean wastes. Many of them have activated steel, activated components, activated copper cabling, activated concrete, miscellaneous

activated wastes, activated soil, activated water, mixed-waste electronic components, and mixed-waste lead. Some facilities have non-radioactive hazardous materials, such as asbestos, beryllium, and lead. In particular, asbestos is present in many buildings at the C-AD, primarily in pipe- and duct-insulation, ceiling tiles, gaskets, thermal insulation, cement boards and pipes, flooring material, and in roofing products. The effectiveness of the decommissioning methods, that is, their ability to keep personnel exposure to hazardous- and radioactive-materials as low as reasonably achievable, and to eliminate or significantly reduce the potential impact on the environment are important criteria that are applied in choosing the optimum method.

Finally, the C-AD will analyze the waste streams that it manages during the decommissioning, and will give the results in the decommissioning plan. The C-AD also will evaluate the wastes' characteristics and volumes, and the options for treatment and disposal. There are multiple waste-streams for both non-radioactive waste and radioactive waste. Some of them can be treated and disposed of locally, such as recyclable metals and concrete waste, while C-AD will ship others for off-site disposal, viz., solid low-level radioactive waste, mixed waste, hazardous waste, and industrial waste, such as oil.

7.2. Baseline Conditions

C-AD will establish the expected baseline conditions at the end of each facility's operating lifetime using information on radioactivity levels and physical conditions basing them on measurements, calculations, design features, operating procedures, and waste-management and disposal facility requirements. The C-AD's Operating Procedures, Environmental Management System, OSH Management System, along with BNL's SBMS Subject Areas would provide up-to-date information on the operating history, activation history, environmental impacts, waste generation and disposal history to help establish the baseline conditions. Where practical, the C-AD incorporated design features that help mitigate the impact of potentially high activation-levels on the baseline. Examples are beam-loss monitors and cutoff devices interlocked to shut off the beam that ensure C-AD meets beam-loss criteria, thereby reducing unnecessary activation of materials. In addition, the C-AD placed impermeable barriers over the soil wherever there are known beam-loss areas, such as beam stops, beam dumps, targets, and collimators. C-AD installed impermeable barriers to minimize the infiltration of surface water into the activated soil areas. The soil activation of these capped areas will contain the highest inventories of radioactivity.

The C-AD designed beam-line cooling systems as closed-loop systems to minimize the amount of activated water. Operations procedure's limits and the ASE's limits on beam intensity, integrated beam, and beam-loss are examples of administrative controls that minimize the inadvertent activation of materials. These administrative controls have a large impact on the cost of the decommissioning since they help ensure both that the C-AD will not have to handle large volumes of soil and water as low-level-radioactive waste, while minimizing activation of the beam-line's components and magnets.

Additionally, the methods detailed in the C-AD Operating Procedures and in BNL SBMS's Subject Areas are in place to track spills, spill-response actions, the inventories of all chemicals, and to record information on beam-loss events. These records will aid

greatly in establishing the baseline. The C-AD manages all records of hazardous wastes, radioactive wastes, area surveys, work planning, and RWP information. The C-AD will provide access to these records as additional baseline information at the time of decommissioning. The C-AD maintains their radiological- and operational-records according to the SBMS's requirements. Both the C-AD and BNL's F&O Directorate maintain the site-, building-, and component-drawings needed to assist in compiling baseline information.

The decommissioning plan will include the requirements for characterizing the facilities after operations are shutdown, and before actual decommissioning commences. It will confirm or re-establish the baseline conditions, allow a risk assessment to support the decommissioning-safety assessment, and will help establish the surveillance and maintenance requirements to maintain facilities in a safe standby mode until decommissioning begins.

7.3. End Point Goals

The C-AD will state the facility's end-point early during decommissioning planning because this will form the basis for specific goals and activities that occur. The C-AD will establish goals for the hazard categories, and safety bases of the deactivated facilities, and determine decommissioning safety-measures.

Deciding upon the desired product, the final site-configuration, and the risks present is essential to planning the decommissioning alternatives for the facilities. The decommissioning plan will address the baseline conditions, and consider all the alternatives.

The process of evaluating the best alternative, and choosing an approach that will result in lowest cost, the least amount of exposure of workers to radiation and hazardous materials during the decommissioning, and the greatest public acceptance will involve consideration of the pros and cons of each alternative, and rely on the input of all stakeholders, including the surrounding community. For example, offices, shops, and auxiliary/support facilities will be relatively clean, with most items therein either recyclable or clean solid-wastes. Accelerator- and experimental-areas contain many thousands of tons of low-level radioactive shielding, and a few tons of highly activated components. Due to the size and number of buildings and useful components, a combination of re-use, safe storage, and decommissioning of non-useable buildings and components is the likely future scenario ultimately to achieve the safest, most cost-effective way.

7.4. Regulatory Requirements

The decommissioning plan will delineate the applicable New York State and federal laws, consensus standards, DOE directives, and other requirements applicable to the decommissioning, especially those required to meet the end-point criteria.

Three categories of regulations affect decommissioning:

- Those directly affecting decommissioning, e.g., removing radioactive and hazardous materials as needed to reduce risk
- Those protecting the worker and the public during decommissioning operations

- Those applying if hazardous- or toxic-materials remain at completion of decommissioning

Several DOE orders and federal regulations cover two or more of these categories, so there may be overlapping requirements. Hence, sound planning for interacting with the regulatory agencies and complying with these regulatory requirements is critical to the timely and successful completion of decommissioning, and will be an integral part of the initial planning work.

7.5. Decommissioning Methods

The C-AD will choose decommissioning methods based on radiological conditions at the accelerator and accelerator facilities at the time of the final shutdown, and their effectiveness in achieving the desired end-points. Many C-AD facilities are clean, such as shops, offices, auxiliary- and support-buildings, and require only standard decommissioning techniques. Based on archival radiological data, all accelerators and accelerator facilities largely can be contact-handled to remove both the components and the activated shielding at final shutdown. A few highly radioactive parts, such as targets, may require remote non-contact handling, at least for 1- to 5-years post shutdown. Additionally, while there are only a few contaminated areas and components at the C-AD, they will require surface decontamination before significant disassembly work is attempted. Therefore, the C-AD will analyze a variety of techniques and removal methods to select approaches that efficiently accomplish the goals while optimizing safety for workers and environmental protection. The methods used to accomplish this activity have already been used because over the years many portions of the facility, including beam lines and targets, have been disassembled to prepare for new experiments.

The decommissioning plan will describe methods that accommodate these varying conditions while maintaining ALARA principles as the basis for the cost estimate. The C-AD currently considers design features that reduce personnel exposure, as well as future decommissioning costs (e.g., monitoring beam loss and using interlocks). The decommissioning plan will detail the conditions and hazards, and, benefits, and it will have additional information and technologies not yet available. The C-AD will determine activation levels thoroughly, so assuring the determination of protection requirements to prevent unwarranted exposure of the workers to radiation.

7.6. Waste Streams

The C-AD will manage multiple waste streams during decommissioning, as is done today during routine operations. C-AD will recycle clean material, treat, and/or dispose of clean material locally, and send much of the radioactive- and hazardous-waste off-site for disposal. The C-AD will identify in their decommissioning plan all recyclable materials and wastes anticipated from the operation. Based on the generality of decommissioning operations and their applicable requirements, the C-AD will identify an all-inclusive list of waste categories in the plan. The list will include recyclable materials, radioactive components, hazardous chemicals, and industrial wastes, and any equipment

or materials saved for reuse, even though they are not be classified as wastes under the Resource Conservation and Recovery Act.

The C-AD and its predecessors have operated since 1953 and since the mid-1980s have annually and safely disposed of approximately 3000 ft^3 of low-level radioactive waste, 30 ft^3 of mixed waste, 1200 gallons of activated water, and 30,000 lbs. of hazardous- and industrial-waste. Based on the advice and assistance of experts in BNL's Environmental Protection Division, the C-AD has gained a thorough understanding of the treatment requirements of all waste streams, the off-site disposal sites' acceptance criteria, and the shipping- and packaging-criteria. Although the decommissioning operations will involve larger volumes of wastes, it will consist of all the same types that C-AD now routinely deals with.

The decommissioning plan will review all waste-treatment facilities and required processes in the United Sates at the time of the decommissioning. BNL uses several low-level radioactive waste-disposal facilities that C-AD assumes will be available in the future, or their alternatives. The C-AD will estimate costs and waste volumes during their development of the decommissioning plan.

8. Chapter Eight, Resource Documents/Acronyms/Units/Links

Table of Contents

8.Chapter Eight, Resource Documents/Acronyms/Units/Links 1
8.1.Resource Documents 1
8.2.Acronyms 15
8.3.Units 20

8.1. Resource Documents

2009 NESHAPs Application for BLIP Stack

2010 BNL Radionuclide Air Emissions Annual Report; the dose was greater than prior years due to a change in dose conversion factors and nuclides in EPA's CAP88

Accelerator Safety Implementation Guide for DOE O 420.2, Safety Of Accelerator Facilities, Office of Science, Department of Energy, May 1999

Accelerator Safety Subject Area, Design Practice for Known Beam Loss Locations

Accelerator Safety Subject Area

Activate Me! Air Activation Estimates for the g-2 Target Area, D. Beavis, AGS EP&S Tech Note 136, AGS Department, Brookhaven National Laboratory, Associated Universities, Inc., Upton, New York 11973, January 1990

AGS Experimenters Guide, Accelerator Department, Brookhaven National Laboratory, Associated Universities, Inc., Upton, New York 11973, June 22, 1976

AGS Final Safety Analysis Report, AGS Department, Brookhaven National Laboratory, Associated Universities, Inc., Upton, New York 11973, August 11, 1993

AGS SAD, 1993

AGS Staff, Shielding of the AGS from the Conversion Program, Accelerator Department, Brookhaven National Laboratory, Upton New York, 11973, A Report Prepared for the AEC Advisory Panel on Accelerator Safety (June 15, 1966)

AGS Studies Report #245, J. W. Glenn, Brown, K., Musolino, S., Stevens, A. and Thern, R., November 21, 1988

AGS to RHIC Transfer Line Safety Assessment Document, Brookhaven National Laboratory, Associated Universities, Inc., Upton, New York 11973, August 14, 1995

Alessi, J., Lessard, E. and Mausner, L., 1998. Soil Activation Computation for BLIP: Memorandum to P. Paul dated May 7, 1998

ANSI/AIHA Z88.2 (1992), Practices for Respiratory Protection

Archival TPL South Wall Shield Analysis, 1995

AtR Safety Assessment Document, July 14, 1995

B-80l Hotspot Analyses, 2006

Barbier, M., Induced Radioactivity, Section 2.3. North-Holland Publishing Company, 1969

Beam Me! Life in the B1 Beam Line, D. Beavis, AGS EP&S Tech Note 118, AGS Department, Brookhaven National Laboratory, Associated Universities, Inc., Upton, New York 11973, March 1987

Beam Stops and Other Sources of Soil Activation at the AGS Complex, BNL Memorandum, E. Lessard and D. Lowenstein to P. Paul, August 7, 1998

Beavis, D. and Karol, R., "E-Field Tests for EDM in the A3 Cave Area", March 19, 2010

Beavis, D. and S. Nemesure, "Store Losses on the RHIC Primary Collimators", May 16, 2011

Beavis, D. Memorandum, "Potential Dose on the RHIC Berm", Dec. 30, 2009

Beavis, D., " Chipmunk Data for Thompson Road", Jan. 30, 2009

Beavis, D., " Skyshine Dose from the RHIC Beam Dumps", August 31, 2010

Beavis, D., " Thompson Road as an Uncontrolled Area", Feb. 17, 2010

Beavis, D., "AtR Low Energy Operations-Potential Dose", Updated Oct. 28, 2009

Beavis, D., "Estimate of the Radiation Exiting Penetrations for the ERL 50 kW Waveguide, Cable Buss Block, and Water Pipes", Dec. 6, 2006

Beavis, D., "Extending Routine Operations of RHIC and AtR to Low Energy", August 28, 2009

Beavis, D., "Low Energy Operations of AtR-Potential Soil Activation", Updated Oct. 28, 2009

Beavis, D., "Potential Dose near RHIC Emergency Ventilation Ducts", Dec. 18, 2009

Beavis, D., "Proposed Changes for U/W Beam Line", Nov. 14, 2008

Beavis, D., "Proposed Changes to the Radiation Protection of Thompson Road", Nov. 18, 2008

Beavis, D., "RHIC Labyrinths", Jan. 14, 2010

Beavis, D., "Scaling Muon Doses from 250 GeV to 300 GeV", May 26, 2011

Beavis, D., "Simple Estimates of ERL Radiation", August 9, 2008

Beavis, D., "The Effectiveness of a Two-Foot Thick Inner Concrete Wall", December 11, 2006, Fig.1

Beavis, D., Dose Rate Estimates for ERL Penetrations, March 26, 2008

Beavis, D., Estimation of Time to Loss of Protection-The D-Downstream Gate, November 13, 2000

Beavis, D., Failures in the PLC Based Radiation Safety Systems, October 31, 2000

Beavis, D., Failures in the PLC Based Radiation Safety Systems, October 31, 2000; Beavis, D., Frequency of Interlock Testing, November 6, 2000; Beavis, D., Estimation of Time to Loss of Protection-The D-Downstream Gate, November 13, 2000

Beavis, D., Frequency of Interlock Testing, November 6, 2000

Beavis, D., Memorandum to RSC, "Initial Radiation Calculations for the VTF Blockhouse", April 6, 2009

Beavis, D., Simple Estimate of ERL Radiation, August 1, 2006

Beavis, D., Summary of Linac Fault Studies, HTB Safety Analysis Report, Appendix 7.7, 1991

Beavis, D., The Effectiveness of a Two-Foot Thick Inner Heavy Concrete Wall, December 11, 2006

Benjamin, J., C. Carlson, J. Throwe and F. Zafonte, Building 901A Shielding Effectiveness Studies, 7/92 and 4/94, Tandem Van de Graaff Facility, August 1994, Appendix XI of the TVDG SAD, June 1995

Bennett, G., "Skinny Shield Studies/Calculations," Informal Note (July 19, 1988)

Bennett, G., L. Blumberg, C. Distenfeld, Foelsche, H., W. Moore, T. Toohig and G. Wheeler, Shielding of the North Experimental Facility and the Slow External Beam Extension, Accelerator Department, Brook haven National Laboratory, Upton New York, 11973, A Report Prepared for the AEC Advisory Panel on Accelerator Safety (February 25, 1970)

Bennett, G., to Beavis, D., RSC Chair, "Chipmunk Response Time," BNL Memorandum, October 9, 1991

Bergh, P. Memorandum to Beavis, D., May 18, 2011

Bergh, P., "CAD Area Monitoring 2010", March 31, 2011

Biosafety in Microbiological and Biomedical Laboratories (BMBL) 4th Edition, HHS, CDC, U.S. Government Printing Office, April, 1999

BLIP Safety Assessment Document, 1996

BLIP Safety Assessment Document, 2009

BLIP Upgrade Shielding Review, 1993

BNL LESHC Meeting Minutes 06-06, May 18, 2006, Energy Recovery Linac in Building 912

BNL Letter, Leland J. Heyworth, Director, to Dr. T. H. Johnson, Division of Research, U.S. Atomic Energy Commission, Washington 25 D.C., September 9, 1953

BNL NESHAPs Permit for Radionuclide Emissions

Booster Applications Facility Safety Assessment Document, Brookhaven National Laboratory, Brookhaven Science Associates, Upton, New York 11973, June 15, 2001

Booster Final Safety Analysis Report, AGS Department, Brookhaven National Laboratory, Associated Universities, Inc., Upton, New York 11973, February 27, 1991

Booster LRM Hardware Specification, E. Beadle and G. Bennett, Booster Tech Note 167, June 7, 1990.

Brodsky, A., "Determining Industrial Hygiene Requirements for Installations Using Radioactive Materials," American Industrial Hygiene Association Journal 26, pp.294-310, May-June 1965 and Health Physics 38, pp.1155-1171, June 1980

Brodsky, A., "Resuspension Factors and Probabilities of Intake of Radioactive Materials in Process (or "Is 10-6 a Magic Number in Health Physics?")", Health Physics 39, pp.992-1000, 1980

Brodsky, A., N. Wald, I. S. Horm and B. J. Varzaly, "The Removal of 241Am from Humans by DTPA," University of Pittsburgh Department of Radiation Health Progress Report, submitted to Department of Health, Education, and Welfare, Research Grant 2ROI EC 00122-03, 22 March 1971, Appendix C

Brodsky, A., N. Wald, R. E. Lee, J. Horm and R. Caldwell, "Americium Contamination Aspects of a Drybox Incident Involving Hand Amputation" in Health Physics Operational Monitoring, Volume 3, Edited by C. A. Willis and J. S. Handloser, Gorden and Breach, NY, pp.1581-1600, 1972

Brookhaven National Laboratory - Technical Guide for the Installation of Monitoring Wells and Piezometers, July 24, 1996

Brookhaven National Laboratory g-2 Tritium Plume – AOC 16T Record of Decision, April 6, 2007

Brookhaven National Laboratory Internal Waiver Request and Approval 2010-4, approved 2-25-2010

Brookhaven National Laboratory, Site Environmental Monitoring Report, Chapter 7, Groundwater Protection, 2000

Brown, K. to J. W. Glenn, "Losses and Activation in the AGS," BNL Memorandum, December 8, 1988

Brown, K., "Beam Loss and Induced Activation in the AGS," Accelerator Division Technical Note 337 (April 9, 1990)

Brown, K., J. Glenn, S. Musolino, A. Stevens, R. Thern, "AGS Shield Tests", AGS Studies Report Number 245 (November 4, 1988)

Brown, K., J. W. Glenn, S. Musolino, A. Stevens, R. Thern, "AGS Shield Tests," AGS Studies Report, Number 245 (November 21, 1988)

Building 801 HVAC Systems

C-AD Environmental Management System

C-AD Occupational Safety and Health Management System

C-AD Training and Qualification Plan

Casey, W. R., Additional Booster Shielding Calculations, Booster Technical Note #93, September 28, 1987

CDC Laboratory Biosafety Level Criteria

CDM Federal Programs Corporation, 1995. Technical Memorandum, Pre-Design Aquifer Test, October 10-20, 1995, Brookhaven National Laboratory, December 1995

Collider-Accelerator Department Fire Hazards Analyses

Conceptual Design of the Booster Applications Facility, AGS Department, Brookhaven National Laboratory, Associated Universities, Inc., Upton, Long Island, New York 11973, October 1997

Conduct of Operations Matrix, 1992 to Date

DeLaguna, W., 1963, Geology of Brookhaven National Laboratory and Vicinity, Suffolk County, New York: U.S. Geological Survey Bulletin 1156-A. 35 p

Design Practice for Known Beam-Loss Locations, BNL Standards Based Management System, July 18, 2000

Distenfeld, C., and R.Colvett, "Skyshine Considerations for Accelerator Shielding Design," Nucl.Sci.Eng.Vol.26, p.117 (1966)

DOE Approval of AGS Conduct of Operations, March 6, 1992

Dose Evaluation for Radioiodine Release from the BLIP Facility, memo from G. Schroeder to L. Mausner, 2/10/1999

Dump It! Conceptual Design of the E864 Beam Dump and Shield Walls, D. Beavis, AGS EP&S Tech Note 142, AGS Department, Brookhaven National Laboratory, Associated Universities, Inc., Upton, New York 11973, October 1992

Email from K. Yip to R. Karol dated January 29, 2008, Skyshine

Environmental Assessment for Proposed Booster Applications Facility (BAF) At Brookhaven National Laboratory, Upton, New York, DOE/EA-1232, January 1998

Environmental Management Program Description

Environmental Restoration Division Sitewide Groundwater Monitoring Report, June 1998

EPA Response to NESHAPs Permit Application, Letter from P. Giardina (EPA) to M. Holland (BHSO), 9/25/2008

Facility Use Agreements

Faust, G.T., Physical Properties and Mineralogy of Selected Sediments form the Vicinity of the Brookhaven National Laboratory, Long Island, New York: U.S. Geological Survey Bulletin, 1156-B, 34 p, 1963

Flux Distribution in a Steel Side Shield, G. Bennett, G. Levine, H. Foelsche, and T. Toohig, Brookhaven National Laboratory, Associated Universities, Inc., Upton, New York 11973, BNL 18441, December 1973.

Foelsche, H. and Lessard, E. T. to J. W. Glenn, "Specific Shield Requirements for the AGS Ring Upgrade," January 23, 1989

Foelsche, H. and Lessard, E. T. to J. W. Glenn, "Specific Shield Requirements for the AGS Ring Upgrade," January 23, 1989

G.R. Stevenson, R.H. Thomas, "A Simple Procedure for the Estimation of Neutron Skyshine from Proton Accelerators", Health Phys. 46, 115-122 (1984)

Geller J., to Beavis, D., RSC Chair, "Time to Chipmunk Interlock for Large Radiation Faults," March 2, 1999

Geller, J. to Beavis, D., RSC Chair, "Time to Chipmunk Interlock for Large Radiation Faults," March 2, 1999

Geraghty and Miller, Inc., 1996 Regional Groundwater Model, Brookhaven National Laboratory, Upton, New York, November 1996

Giant Nuclear Resonance, January 2008

Goebel, K., G.R.Stevenson, J.T.Routi, and H.G.Vogt, "Evaluating Dose Rates Due to Neutron Leakage Through Access Tunnels of the SPS," CERN LABII-RA/Note/75-10 (1975)

Goebel, K., Stevenson, G. R., Routi, J. T., and Vogt, H. G., "Evaluating Dose Rates Due to Neutron Leakage Through Access Tunnels of the SPS," CERN LABII-RA/Note/75-10, 1975

Gollon, P. J., AD/RHIC/RD-76A, Amendment to Shielding of Multi-Leg Penetrations into the RHIC Collider, July 1996

Gollon, P. J., Booster Tunnel Shield Calculation, Booster Technical Note #66, October 24, 1986

Gollon, P. J., N. Rohrig, M.G. Hauptman. K. McIntyre, R, Miltenberger, J. Naidu, Production of Radioactivity in Local Soil at AGS Fast Neutrino Beam, Informal Report, BNL 43558, October 1989

Gollon, P.J., Rohrig, N., Hauptmann, M.G., McIntyre, K., Miltenberger, R. and Naidu, J., 1989. Production of Radioactivity in Local Soil at AGS Fast Neutrino Beam. BNL-43558

High Intensity Target Station Study: Phase 1, D. Beavis, A. Carroll, W. Leonhardt, J. Mills, A. Pendzick, E. Schwaner, AGS EP&S Tech Note 131, AGS Department, Brookhaven National Laboratory, Associated Universities, Inc., Upton, New York 11973, November, 1987

Holzmacher, McLendon and Murrel, P.C. (H2M), and Roux Associates, Inc., Waste Management Area, Aquifer Evaluation and program Design for Restoration, Volumes I and II, , 1985

Hughes, H. G., Prael, R. E., and Little, R. C., "MCNPX – The LAHET/MCNP Code Merger," X-Division Research Note, 4/22/97

Hull, A. P., "Preliminary Dose Assessment of the Chernobyl Accident, Parts I-III," The Health Physics Newsletter, Vol. XIV No.12 and Vol. XV No.and No.2, Health Physics Society, 1340 Old Chain Bridge Road, Suite 300, McLean, VA 22101, 1986-1987

IAEA Technical Reports Series No. 188, Radiological Safety Aspects of the Operation of Electron Linear Accelerators, Vienna

IAEA Technical Reports Series No. 283, Radiological Safety Aspects of the Operations of Proton Accelerators, Vienna, 1988

ICRP Publication 60, 1990 Recommendations of the International Commission on Radiological Protection, Table 1

IH Cavity Measurements by U. Ratzinger

Implementation Plan and Basis for Interim Operation with Preliminary Hazard Assessment for AGS Uranium Shield Block and Experiment 877 Uranium Calorimeters, Brookhaven National Laboratory, Associated Universities, Inc., Upton, New York 11973, August 3, 1993.

International Commission on Radiological Protection, Data for Protection Against Ionizing Radiation from External Sources: Supplement to ICRP Publication 15, ICRP Publication 2[Pergamon Press, October (1973)]

Investigation of the Tritium Release at Location Upgradient of BNL Well 054-067, December 10, 1999

Karol, R., AGS Cold Snake ODH Calculation Revisited, December 5, 2008

Karol, R., B801 Site Boundary Ground level Atmospheric Dispersion Model, October 28, 2010

Karol, R., B801 Stack Release Site Boundary Atmospheric Dispersion Model, October, 29, 2010

Karol, R., B912 Small VTA House ODH Calculations (Revised), June 20, 2008 (Revised 12-3-08)

Karol, R., BLIP Site Boundary Ground level Atmospheric Dispersion Model, November 19, 2010

Karol, R., BLIP Stack Release Site Boundary Atmospheric Dispersion Model, November 4, 2010

Karol, R., BLIP Target Transportation Accident – Site Boundary Dose Calculation, January 3, 2011, Revised June 9, 2011

Karol, R., Collider Building ODH Calculations – Revisited, dated April 18, 2000 (Revised 5/26/00)

Karol, R., Determination of RHIC Component Helium Pressure Boundary Failure Rates and RHIC Tunnel Sextant, January 3, 2009

Karol, R., Dose to Individual in BAF Target Room Following Ventilation Failure, March 19, 200(Revised 4/19/01), Appendix 12

Karol, R., ERL ODH Calculations, January 8, 2008

Karol, R., Radiation Hazards From C-A Water Tanker Tritiated Water Evaporation, March 6, 2002

Karol, R., Refrigerator Building and Compressor Building Helium Pressure Boundary Failure Rates, January 5, 2009

Karol, R., RHIC Tunnel and Service Buildings ODH Calculations - Basis for ODH 0 Classification when Helium Temperature is ≥ 40K, January 13, 2009

Karol, R., Support Buildings and Collider Tunnel Sextant ODH Classifications with 80K Helium Cooler Operating, November 22, 2002

Koppelman, L.E. (Ed.), 1978. The Long Island Comprehensive Water Treatment Management Plan (Long Island 208 Study): Nassau-Suffolk Regional Planning Board, Hauppauge, New York, Volumes I and II, July 1978

Lessard, E. T. to AGS Ring Shield Upgrade Group, "Design Criteria," BNL Memorandum, August 9, 1988

Lessard, E. T. to J. W. Glenn, "AGS Ring Shielding Upgrade Group and Goals," BNL Memorandum, November 4, 1988

Lessard, E. T., Booster Shield Wall/Door Analysis, March 30, 1989, Appendix 13.2

Lessard, E. T., NL Memorandum, Summary of Neutron and Gamma Measurements for FY96, October 11, 1996

Low Hazard Class Determination For The Ion Accelerator Complex That Includes: Linac, Tandem To Booster Line, Booster, Alternating Gradient Synchrotron, Slow Extracted Beam Lines, Fast Extracted Beam Lines, Fixed Target Experimental Areas And AGS To Relativistic Heavy Ion Collider Transfer Line, Brookhaven National Laboratory, Associated Universities, Inc., Upton, New York 11973, June 1, 1995

Lubke, E.R., Hydrogeology of the Huntington-Smithtown Area, Suffolk County, New York: U.S. Geological Survey Water-Supply Paper 1669-D, p. D1-D68, 1964.

Mausner, L. F., BNL BLIP II Safety Analysis Report, January 20, 1985

McGuire, S. A., "A Regulatory Analysis on Emergency Preparedness For Fuel Cycle and Other Radioactive Material Licensees"

Memorandum for D. Lowenstein and E. Lessard to P. Paul, Beam Stops and Other Sources of Soil Activation at the AGS Complex, August 7, 1998

Memorandum from B. Hooda to P. Lang, dated June 25, 2001

MicroShield Radiation Shielding Calculations, prepared by K. Kolsky, Reviewed by H. Kahnhauser (RCD)

Miller, T. and P. Mazur, Oxygen Deficiency Hazards Associated with Liquefied Gas Systems: Derivation of a program of Controls, Am. Ind. Hyg. Assoc. J. 45(5):293-298(1984)

Monte Carlo Neutron Shielding Calculations, prepared by H. Ludewig & M. Todosow, May 1995

Musolino, S., Measurements of Prompt Radiation from the PoP RF Cavity Test Stand in Building 1005 Highbay, August 8, 1995,

Musolino, S., Measurements of Prompt Radiation from the Storage RF Cavity Test 4 o'clock Service Building, August 8, 1995

NBS Handbook 50

NCRP 144, Radiation Protection for Particle Accelerator Facilities, December 2003

NCRP Report 65, Management of Persons Accidentally Contaminated with Radionuclides, NCRP Publications, P. O. Box 30175, Washington, DC 20014, 1980

NCRP Report No. 115, Risk Estimates for Radiation Protection

NCRP Report No. 144, Radiation Protection for Particle Accelerator Facilities, December 31, 2003

NCRP Report No. 144, Radiation Protection for Particle Accelerator Facilities, Figure 3.5

NCRP Report No. 144, Radiation Protection for Particle Accelerator Facilities, National Council on Radiation Protection and Measurements, 2003 (see Fig.3.5)

NCRP Report No. 51, Radiation Protection Guidelines for 0.– 100 MeV Particle Accelerator Facilities, March 1, 1977

NESHAPs Evaluation - Lab 2-52, 2002 and NESHAPs Evaluation - Room 2-66 and 2-66C, 2002

Norwood, W. D., Health Protection of Radiation Workers, Charles C. Thomas, Springfield, IL, 1975

NSRL SAD, 2001

Operations Procedure Manual for Collider-Accelerator Department

Organization Chart for Collider-Accelerator Department

Full Title not here Other Radioactive Material Licensees," NUREG 1140, U. S. Nuclear Regulatory Commission, Washington, D.C. 20555, 1985

Particle Distribution in a Steel Beam Stop for 28 GeV Protons, G. Bennett, H. Brown, H. Foelsche, J. Fox, D. Lazarus, G. Levine, T. Toohig, R. Thomas, J. Kostoulas, no date.

Polarized SRF Gun Experiment

Presentation to the Radiation Safety Committee on April 3, 1996 by Stevens, A. J. in RSC files

Programmed Improvements Of The Alternating Gradient Synchrotron Complex At Brookhaven National Laboratory Upton, New York, Environmental Assessment, U. S. Department Of Energy, DOE/EA #0909, November 1993.

Prototype Energy Recovery Linac, Building 912, Safety Assessment Document, June 30, 2008

Prototype ERL USI, 2008

Radiation Protection Studies During High Intensity Proton Running at AGS, Radiation Exposure Around the AGS Ring and in the SEB Experimental Areas, E. Lessard, K. Reece, and R. Miltenberger, AGS/AD/Tech. Note 414, Brookhaven National Laboratory, Associated Universities, Inc., Upton, New York 11973, March 14, 1995

Radiation Safety for Experiment 802 in the B1 Line, D. Beavis, Brookhaven National Laboratory, Associated Universities, Inc., Upton, New York 11973, September 15, 1986

Radiological Control Manual, BNL

Report of the AGS Experimental Area Shielding Upgrade Committee, BNL-45892, August 1990

Report of the AGS Shielding Upgrade Committee, D. Beavis, H. Brown, G. Bunce, I-H. Chiang, J. Glenn, D. Lazarus, E. Lessard, A. Pendzick, W. Sims, K. Woodle, AGS Department, BNL-45892, Brookhaven National Laboratory, Associated Universities, Inc., Upton, New York 11973, August 1990

Review of Potential Environmental Release Points, Accelerator and Experimental Facility Summary Document with Individual Building Area Reports, AGS Department, Brookhaven National Laboratory, Associated Universities, Inc., Upton, New York 11973, June 16, 1997

RHIC Area Monitoring Report for CY 2000

RHIC ASE, Section 2.4

RHIC Cryogenic System Safety Assessment Document, RHIC Project, Brookhaven National Laboratory, Associated Universities, Inc., Upton, New York 11973, September 13, 1994

RHIC Design Manual, Collider-Accelerator Department, Brookhaven National Laboratory, Brookhaven Science Associates, Upton, New York 11973, Revised October 2000

RHIC Design Manual, Personnel Safety System Design, RHIC Project, Brookhaven National Laboratory, Associated Universities, Inc., Upton, New York 11973, January 1994

RHIC Note, Amendment to Shielding Multi-Leg Penetrations at RHIC Collider, P. Gollon, AD/RHIC/RD-76A, July 1996

RHIC Note, Betatron Scraping at RHIC: General Remarks and Sample Calculations, A. Stevens, AD/RHIC/RD-45, September 1992

RHIC Note, BRAHMS Shield Wall Calculations, A. Stevens, RHIC DET Note 24, October 1997

RHIC Note, Conceptual Design of RHIC Dump Core, A. Stevens, AD/RHIC/RD-94, September 1995

RHIC Note, Dose Estimates in the 4 o'clock Region, A. Stevens, no date

RHIC Note, End Wall Dose Equivalent Estimates at 6 O'clock, A. Stevens, AD/RHIC/RD-91, June 1995

RHIC Note, Energy Deposition Downstream of the Internal Dump, A. Stevens, AD/RHIC/RD-97, December 1995

RHIC Note, Estimated Shielding Requirements for the PHENIX Detector, A. Stevens, RHIC DET Note 13, December 1994

RHIC Note, Estimates of Dose Equivalent Associated With Penetrations in the PHENIX Shield Wall, S. Kahn and A. Stevens, AD/RHIC/RD-120, June 1998

RHIC Note, Local Shielding Requirements for the STAR Detector, A. Stevens, RHIC DET Note 5, June 1992

RHIC Note, MCNPX 2.1.5 Shielding Estimates in a Simple Tunnel Geometry, A. Stevens, no date

RHIC Note, Radiation Environment and Induced Activity Near the RHIC Internal Beam Dump, A. Stevens, AD/RHIC/RD-48, November 1992

RHIC Note, Radiation Safety Considerations Near Collimators, A. J. Stevens, AD/RHIC/RD-113, April 1997

RHIC Note, Shielding of Multi-Leg Penetrations Into the RHIC Collider, P. Gollon, AD/RHIC/RD-76, October 1994

RHIC SAD, Appendix 16, Shielding of Multi-Leg Penetrations into the Collider Tunnel, October 1999

RHIC SAD, Appendix 19, Evaluations of Straight Through Penetrations, October 1999

RHIC Safety Assessment Document, Brookhaven National Laboratory, Brookhaven Science Associates, Upton, New York 11973, December 13, 1999

Ring Me! Potential Radiation Levels from Faults in the AGS Ring, D. Beavis, AGS EP&S Tech Note 138, AGS Department, Brookhaven National Laboratory, Associated Universities, Inc., Upton, New York 11973, September 1991

RSC Minutes of December 29, 1999

RSC Minutes of April 29, 2003

RSC Minutes of April 12, 2006

RSC Minutes of March 20, 2007

RSC Minutes of October 17, 2007

RSC Minutes of March 17, 2009

RSC Minutes of August 25, 2009

RSC Minutes of September 30, 2009

RSC Minutes of October 14, 2009

RSC Minutes of June 14, 2011

Safety for g-2, E. Lessard, Muon g-2 Tech Note 117, AGS Department, Brookhaven National Laboratory, Associated Universities, Inc., Upton, New York 11973, June 1992

Sand as a Side Shield for 30 GeV Protons Stopping in the Brookhaven AGS, R. Casey, C. Distenfeld, G. Levine, W. Moore, and L. Smith, Accelerator Department, AGSCD-13, Brookhaven National Laboratory, Associated Universities, Inc., Upton, New York 11973, November 1966

Satogata, T., "RHIC Low Energy Beam Loss Projections", Sept. 1, 2009

Schroeder, G. L., Paquette, D. E., Naidu, J. R., Lee, R. J. and Briggs, S. L. K., 1998, Brookhaven National Laboratory Site Environmental Report for Calendar Year 1996, BNL-52543, January 1998

Schubert, J., S. Yaniv, K. Lamson, N. Wald, R. Wechsler and R. Caldwell, "Deposition and Retention of 192Ir in the Lung After an Inhalation Incident," Abstracts of the Health Physics Annual Meeting, June 18-22, 1967, Pergamon Press, 1967

Scorca, M. P., Dorsch, W.R., and Paquette, D. E., 1996. Water-Table Altitude near the Brookhaven National Laboratory, Suffolk County, New York, in March 1995. U.S. Geological Survey Fact Sheet FS-128-96, December 1996

Scorca, M. P., Dorsch, W.R., and Paquette, D. E., 1997. Water-Table Altitude near the Brookhaven National Laboratory, Suffolk County, New York, in August 1995. U.S. Geological Survey Fact Sheet FS-233-96, April 1997

Shielding for the AGS J10 Scraper, E. Bleser, AGS/AD/Tech. Note 444, Brookhaven National Laboratory, Associated Universities, Inc., Upton, New York 11973, September 13, 1996

Shielding of Long External Beams, G. Bennett and A. Van Steenbergen (in blue like others), Accelerator Department Internal Report, Brookhaven National Laboratory, Associated Universities, Inc., Upton, New York 11973, December 1969

Shielding of the 200 MeV Linac, Wheeler, G. W. and Moore, W. H., Accelerator Department, Internal Report AGSCD-10, Brookhaven National Laboratory, Associated Universities, Inc., Upton, New York 11973, May 18, 1966

Shielding of the AGS for the Conversion Program, G. W. Wheeler and Staff, Accelerator Department, Brookhaven National Laboratory, Associated Universities, Inc., Upton, New York 11973, July 15, 1966

Side Shield Design for Proton Beams, 15-30 GeV, W. Moore, G. Levine and G. Bennett, Brookhaven National Laboratory, Associated Universities, Inc., Upton, New York 11973, November 29, 1971

Sluyters, Th. to D. I. Lowenstein, "AGS Ring Shield Upgrade Group, BNL Memorandum, July 26, 1988

Smolensky, D. A., Buxton, H. T., and Shernoff, P. K., 1989, Hydrogeologic Framework of Long Island, New York: U.S. Geological Survey, Hydrogeologic Investigations Atlas 709, 3 Sheets

Snydstrup, L., Calculation of Oxygen Deficiency Hazards for TVDG, Revision 0, November 5, 2001

Soil Activation Computation for BLIP, BNL Memorandum, J. Alessi, E. Lessard and L. Mausner, May 7, 1998

Soil Me! Soil Activation Estimates for the g-2 Target Area and Beam Dump, D. Beavis, AGS EP&S Tech Note 135, AGS Department, Brookhaven National Laboratory, Associated Universities, Inc., Upton, New York 11973, December 1989

Source Functions and Transport Losses for a 28 GeV External Beam, G. Bennett, G. Levine and W. Moore, Accelerator Department, Brookhaven National Laboratory, Upton New York 11973, April 13, 1971

Source of High Energy Particle From an Internal Target in the AGS, W. Moore, Accelerator Department, AGSCD-6, Brookhaven National Laboratory, Associated Universities, Inc., Upton, New York 11973, January 1966

Standards Based Management System, BNL

Stenstrom, T., PhD Thesis, 1970, University Of Uppsala, Sweden, Radiolysis of Water by 185 MeV Protons

Stevens, A J., "Summary of Fault Studies at RHIC," BNL C-A Dept ES&F Note 156, 2000

Stevens, A. J. to J. W. Glenn, "Preliminary Estimate of Skyshine from AGS Ring," Informal Memorandum, October 10, 1988

Stevens, A. J., "N-Shield, Description," BNL C-A Dept., ES&F Division Note 157, 2000

Stevens, A. J., "N-Shield, Description," BNL C-A Dept.ES&F Division Note 157 (2000)

Stevens, A. J., "Radiation Field in the Vicinity of the Collider Center", AD/RHIC/RD-77, Oct. 1994

Stevens, A. J., "Summary of Fault Studies at RHIC" BNL C-A Dept ES&F Note 156 (2000)

Stevens, A. J., AD/RHIC/RD-113, Radiation Safety Considerations Near Collimators, April 1997

Stevens, A. J., AD/RHIC/RD-83, Analysis of Radiation Levels Associated with Operation of the RHIC Transfer Line, December 1994

Stevens, A. J., AD/RHIC-46, Radiation from Muons from RHIC, 2/1/89

Stevens, A. J., C-AD/ES&F Technical Note No. 156, Summary of Fault Study Results at RHIC, July 12, 2000

Stevenson, G. R., R.H. Thomas, "A Simple Procedure for the Estimation of Neutron Skyshine from Proton Accelerators", Health Phys. 46, 115-122 (1984)

Suffolk County Department of Health Services, Suffolk County Comprehensive Water Resources Management Plan, Division of Environmental Quality, Hauppauge, New York, Volumes I and II, January 1987

Sullivan, A. H., A Guide to Radiation and Radioactivity Levels Near High Energy Particle Accelerators, Nuclear Technology Publishing, 1992 (see Figure 2.2)

Sullivan, A. H., A Guide to Radiation and Radioactivity Levels Near High Energy Particle Accelerators, Nuclear Technology Publishing, Ashford, Kent, England, 1992

Summary of Neutron and Gamma Measurements for FY96, Memorandum, E. Lessard to Distribution, Brookhaven National Laboratory, Associated Universities, Inc., Upton, New York 11973, October 11, 1996

Supplemental Hazard Analysis Report for the RRPL, December 26, 2006

Swanson, W. P., Radiological Safety Aspects Of The Operation Of Electron Linear Accelerators, Technical Report No. 188, International Atomic Energy Agency (IAEA), Vienna, 1979. Adapted in Radiation Physics For Personnel And Environmental Protection, Fermilab Report Tm-1834, Revision 7, April 2004, J. Donald Cossairt, Fermi National Accelerator Laboratory

Swanson, W. P., Toxic Gas Production at Electron Linear Accelerators, SLAC-PUB-2470, February 1980

Tandem to Booster Safety Assessment Document, Brookhaven National Laboratory, Associated Universities, Inc., Upton, New York 11973, December 7, 1991

Tandem Van De Graaff Safety Assessment Document, Brookhaven National Laboratory, Associated Universities, Inc., Upton, New York 11973, November 28, 1995

Target Radioactivity Content at AGS, E. Lessard and C. Schaefer, AGS Department, EP&S Tech Note 152, Brookhaven National Laboratory, Associated Universities, Inc., Upton, New York 11973, April 1996

Technical Basis for Bioassay Requirements, Collider-Accelerator Department, January 2001, Revised May 2008

Tesch, K., "A Simple Estimation of the Lateral Shielding for Proton Accelerators in the Energy Range 50 to 1000 MeV", Radiation Protection Dosimetry 11, 165-172 (1985)

Tesch, K., "Comments on the Transverse Shielding of Proton Accelerators", Health Phys. 44, 79-82 (1983)

Tesch, K., and H.Dinter, "Estimation of Radiation Fields at High Energy Proton Accelerators," Radiation Protection Dosimetry, Vol.15 No.2 pp.89-107 (1986)

The AGS Booster Beam Loss Monitor System, E. Beadle, G. Bennett and R. Witcover, BNL-45410, AGS Department, Brookhaven National Laboratory, Associated Universities, Inc., Upton, New York 11973, May 1991

The Brookhaven AGS Radiation Monitoring Systems, G. Levine and G. Bennett, Brookhaven National Laboratory, Associated Universities, Inc., Upton, New York 11973, February 18, 1971

The Prototype Skinny Shield Radiation Monitor, G. Bunce, V. Castillo, and J. W. Glenn, AGS EP&S Tech Note #147, AGS Department, Brookhaven National Laboratory, Associated Universities, Inc., Upton, New York 11973, August, 1993

The Upgraded Ring Loss Radiation Monitoring System at AGS, G. Bennett, E. Beadle, V. Castillo and R. Witcover, Brookhaven National Laboratory, Associated Universities, Inc., Upton, New York 11973, BNL 41824, March 1989

Thompson, R. C., Editor, "1976 Hanford Americium Exposure Incident," Special Issue, Health Physics 45, October, 1983

Training and Qualification Management System, BNL

US EPA, Guidance for the Data Quality Objectives Process, US EPA Washington, D.C., EPA QA/G4, September 1994

Van Essendelft, M. to Beavis, D., See RSC memos, "Soil Sample Results 2010", April 4, 2011

Van Ginneken, A., "CASIM; Program to Simulate Hadron Cascades in Bulk Matter," Fermilab FN-272, 1975

Van Ginneken, A., "CASIM; Program to Simulate Hadron Cascades in Bulk Matter," Fermilab FN-272 (1975)

Warren, M.A., deLaguna, W., and Lusczynski, N.J., Hydrogeology of Brookhaven National Laboratory and Vicinity, Suffolk County, New York: U.S. Geological Survey Bulletin 1156-C, 127 p, 1968

Waters, L. S., Ed., "MCNPX USER'S MANUAL," LANL Report TPO-E83-UG-X-0001, (1999). See also H. G. Hughes, R. E. Prael, R. C. Little, "MCNPX – The LAHET/MCNP Code Merger," X-Division Research Note, 4/22/97

Waters, L. S., Ed., "MCNPX USER'S MANUAL," LANL Report TPO-E83-UG-X-0001, 1999.

Wheeler, G. W., and Staff, Shielding of the 200 MeV Linac, Accelerator Department, Brookhaven National Laboratory, Associated Universities, Inc., Upton, New York 11973, July 15, 1966

Woodward-Clyde Consultants, Potable Well Study, Brookhaven National Laboratory, 1993

Yip, K., Increased Neutron Dose Due to Increased Deuteron Energy in the TTB Line, December 15, 2002

8.2. Acronyms

AC – Alternating Current

ACS – Access Control System
AGS – Alternating Gradient Synchrotron
AHJ – Authority Having Jurisdiction
AISC - American Institute of Steel Construction
ALARA – As Low As Reasonably Achievable
AnDY – Analyzing Drell Yan
ANSI – American National Standards Institute
ASE – Accelerator Safety Envelope
ASME - American Society of Mechanical Engineers
ASSRC – Accelerator Systems Safety Review Committee
ASTM - American Society for Testing and Materials
AtR – AGS to RHIC Transfer Line
ATS – Assessment Tracking System
AVS – American Vacuum Society
AWS – American Welding Society
BAF – Booster Applications Facility
BGRR –Brookhaven Graphite Research Reactor
BHSO – Brookhaven Site Office
BIS – Beam Instrumentation System
BLIP – Brookhaven Linac Isotope Producer
BNC – Baby N Connector (slang)
BNL – Brookhaven National Laboratory
BPM – Beam Position Monitor
BPVC – Boiler and Pressure Vessel Code
BRAHAMS - Broad Range Hadron Magnetic Spectrometer
BSA – Brookhaven Science Associates
BtA – Booster to AGS
BTMS – Brookhaven Training Management System
BYSCO - Bismuth Yttrium Strontium Copper Oxide
C-A – Collider-Accelerator
CA – Controlled Access
C-AD – Collider-Accelerator Department
CAP88-PC - Clean Air Act Computer Code
CAS – Collider-Accelerator Systems Watch
CASIM – Cascade Simulation Computer Code
CEE – Chief Electrical Engineer
CFR – Code of Federal Regulations
CGA – Compressed Gas Association
CME – Chief Mechanical Engineer
CP – Charge – Parity
DC – Direct Current
DCG – Derived Concentration Guides
DCOO – Directorate Chief Operating Officer
DNA – Deoxyribonucleic Acid
DOE – Department of Energy

DOT – Department of Transportation
DWS – Drinking Water Standard
EAGAL – Experimental Area Group Alarm
EBIS – Electron Beam Ion Source
ECal – Electron Calorimeter
ECR – Environmental Compliance Representative
EJMA - Expansion Joint Manufacturers' Association
EMS – Environmental Management System
EPA – Environmental Protection Agency
ERL – Energy Recovery Linac
ES&F – Experimental Support and Facilities Division
ESH – Environment, Safety and Health
ESHQ – Environment, Safety, Health and Quality
ESRC – Experimental Safety Review Committee
ESSHQ – Environment, Safety, Security, Health and Quality
F&O – Facilities and Operations
FEB – Fast External Beam
FHA – Fire Hazards Analysis
FPGA – Field Programmable Gate Array
FUA – Facility Use Agreement
HCal- Hadron Calorimeter
HEBT – High Energy Beam Transport
HENP – High Energy and Nuclear Physics
HEPA – High Efficiency Particulate Air (filter)
HFBR – High Flux Beam Reactor
HITL – Heavy Ion Transfer Line
HTB – HITL to Booster Line
HV – High Voltage
HVAC – Heating, Venting and Air Conditioning
HZE – High Energy High Z Particles
IACUC – Institutional Animal Care and Use Committee
IBC – Institutional Biosafety Committee
IH Linac – Interdigital H Linac
IP – Interaction Point
IR – Interaction Region in RHIC
IRB – Institutional Review Board
ISM – Integrated Safety Management
ISO – International Standards Organization
JTA – Job Training Assessment
LBH – Little Block House
LE – Liaison Engineer
LEC – Local Emergency Coordinator
LET – Linear Energy Transfer
LOTO – Lock Out / Tag Out
LP – Liaison Physicist

LRM – Long Radiation Monitor
MCL – Maximum Contaminant Level
MCNPX – Monte Carlo Neutron Photon Transport Computer Codes
MCR – Main Control Room
MEBT – Medium Energy Beam Transport
MHV – Miniature High Voltage
MMPS – Main Magnet Power Supply
MPFL - Maximum Possible Fire Loss
MS – Management System
MSS – Manufacturers Standardization Society
NASA – National Aeronautics and Space Administration
NCRP – National Council on Radiation Protection and Measurements
NEC – National Electric Code
NEG – Non-Evaporative Getters
NEPA – National Environmental Policy Act
NESHAP - National Air Emission Standards for Hazardous Air Pollutants
NFPA – National Fire Protection Association
NIH – National Institutes of Health
NMC – Nuclear Measurements Corporation
NSRL – NASA Space Radiation Laboratory
NYS – New York State
ODH – Oxygen Deficiency Hazard
OHSAS – Occupational Health and Safety Assessment Series
OPM – Operations Procedure Manual
OPPIS – Optically Pumped Polarized Proton Source
ORPS – Occurrence Reporting and Processing System
OSH – Occupational Safety and Health
OSHA – Occupational Safety and Health Administration
P&ID – Piping and Instrumentation Drawing
P2 – Pollution Prevention
PASS – Personnel Access Safety System
PCB – Poly Chlorinated Biphenyl
PCSS – Pressure and Cryogenic Safety SubCommittee
PE – Plant Engineering
PHENIX - Pioneering High Energy Nuclear Interaction eXperiment
PHOBOS - not an acronym
PLC – Programmable Logic Controller
PMT – Photo-Multiplier Tube
POM – Personal Oxygen Monitor
PPE – Personal Protective Equipment
PVC – Poly Vinyl Chloride
QA – Quality Assurance
QA1 – Quality Assurance Category 1
QGP – Quark Gluon Plasma
R&D – Research and Development

R2A2 – Roles, Responsibilities, Accountabilities, and Authorities
RadCon – Radiological Control
RBE – Relative Biological Effectiveness
RCRBSJ - Research Council on Riveted and Bolted Structural Joints
RCT – Radiological Control Technician
RF – Radio Frequency
RFQ – Radio Frequency Quadrupole
RHIC – Relativistic Heavy Ion Collider
ROCO – Research Operations Coordination and Oversight
RRPL – Radionuclide Research Processing Laboratory
RSC – Radiation Safety Committee
RSVP - Rare Symmetry Violating Processes
RWP – Radiation Work Permit
S&T – Science and Technology
SACR – Scientific Advisory Committee for Radiobiology
SAD – Safety Assessment Document
SAR – Safety Analysis Report
SBC – Standard Building Code
SBMS – Standards Based Management System
SCBA – Self-Contained Breathing Apparatus
SCDHS – Suffolk County Department of Health Services
SEB – Slow External Beam
SEC – Secondary Emission Chamber
SEU – Single Event Upset
SFPC – Standard Fire Prevention Code
SLC – Allen Bradley Trade Mark for a given series of logic controller
SMCS - Safety Monitor and Control System
SPDES – State Pollution Discharge Elimination System
SRF - Superconducting RF
SRSAR – Self-Rescue Supplied Air Respirator
SSPC – Society for Protective Coatings
STAR - Solenoidal Tracker at RHIC
STP – Sewage Treatment Plant
SUNY – State University of New York
SWIC – Segmented Wire Ionization Chamber
TLD – Thermo-Luminescent Dosimeter
TPL – Target Processing Laboratory
TRIUMF - Canada's National Laboratory for Particle and Nuclear Physics
TtB – Tandem to Booster Transfer Line (HITL plus HTB)
TVDG – Tandem Van De Graaff
UL- Underwriters Laboratories
UPS – Uninterruptible Power Supply
USDA – United States Department of Agriculture
VME - Versa Module Europa
VTF – Vertical Test Facility

WOSH – Worker Occupational Safety and Health
XHV – Extremely High Vacuum

8.3. Units

GeV – billion electron volts, a unit of energy (1 GeV = $1x10^9$ electron volts)
Hz – hertz, a unit of frequency (1 Hz = 1 cycle/second)
h – hour
kW – kilowatt, a unit of power (1 kW = $6.243x10^{15}$ MeV/s)
MeV – million electron volts, a unit of energy (1 MeV = $1x10^6$ electron volts)
MGD – a unit of volumetric flow rate, million gallons per day
mb – milli-barn, a unit of cross-sectional area (1 mb = 10^{-27} cm^2)
mil – a unit of length (1 mil = 0.001 inch)
mT – milliTesla, a unit of magnetic field strength (1 mT = 10 gauss)
mrad – milliard, a unit of absorbed dose (1mrad = $6.242x10^4$ GeV/g)
mrem – millirem, a unit of equivalent dose (1 mrem = 1 mrad x modifying factors)
ppm – a ratio of mass of component to mass of solution, parts per million
radian – a unit of angle (1 radian = $180^o/\pi$)
s – second
TP – a unit of protons (1 TP = $1x10^{12}$ protons)
Torr – a unit of pressure (1 Torr = 1 mm Hg)
μCi – a unit of radioactivity (1 μCi = $3.7x10^4$ disintegrations per second)

C-AD Hazards and Risk Assessment Screening

Table A2-1 Hazards and Risk Assessment for Vacuum Systems..... 2
Table A2-2 Hazards and Risk Assessment for External Events 3
Table A2-3 Hazards and Risk Assessment for Electric Shock 4
Table A2-4 Hazards and Risk Assessment Radiation Exposure Outside Enclosures 5
Table A2-5 Hazards and Risk Assessment for Radiation Exposure Inside Enclosures 6
Table A2-6 Hazards and Risk Assessment for Activated Components..... 7
Table A2-7 Hazards and Risk Assessment for Conventional/Industrial Equipment..... 8
Table A2-8 Hazards and Risk Assessment for Airborne Radioactive Releases..... 9
Table A2-9 Hazards and Risk Assessment for Liquid Radioactive Releases..... 10
Table A2-10 Hazards and Risk Assessment for Loss of Electrical Power 11
Table A2-11 Hazards and Risk Assessment for Fire Event..... 12
Table A2-12 Hazards and Risk Assessment for Groundwater Contamination..... 13
Table A2-13 Hazards and Risk Assessment for Biological/Medical Samples..... 14
Table A2-14 Hazards and Risk Assessment for Oxygen Deficiency 15
Table A2-15 Hazards and Risk Assessment for Hazardous Material Handling..... 16

Table A2-1 Hazards and Risk Assessment for Vacuum Systems

FACILITY NAME: C-AD
SYSTEM: Vacuum Beam Line
SUB-SYSTEM: Vacuum System, Beam Window
HAZARD: Vacuum

Event	Structural failure of vacuum boundary
Possible Consequences, Hazards	Implosion of any vacuum component could pose a potential health risk from flying objects.
Potential Initiators	Failure caused by worker mistake or inadvertent striking contact with vacuum boundary.

Risk Assessment Prior to Mitigation

Note: Refer to Chapter 4 for an explanation of consequence, frequency and risk levels. "Low" and "Extremely Low" risk levels are considered acceptable.

Consequence	() High	() Medium	(X) Low	() Extremely Low
Frequency	() Anticipated High	(X) Anticipated Medium	() Unlikely	() Extremely Unlikely
Risk Category	() High Risk	() Medium	(X) Low Risk	() Extremely Low

Hazard Mitigation	1. Beam line vacuum components designed to meet C-A/industry standards 2. Vacuum and pressure systems reviewed by the C-A Chief Mechanical Engineer or his designate 3. Vacuum components, except for windows, are constructed of heavy-walled material, per ASME Boiler and Pressure Vessel Code, Section VIII to minimize the threat of implosion when evacuated 4. Training of Users and Staff

Risk Assessment Following Mitigation

Consequence	() High	() Medium	(X) Low	() Extremely Low
Frequency	() Anticipated High	() Anticipated Medium	(X) Unlikely	() Extremely Unlikely
Risk Category	() High Risk	() Medium	() Low Risk	(X) Extremely Low

Is the mitigated hazard adequately controlled by BNL SBMS requirements? Y/N Yes If No, consider requesting a change to BNL SBMS.

Is a Credited Control or Support needed for hazard control? Y/N No If Yes, consider implementing a Credited Control and documenting in the ASE.

Table A2-2 Hazards and Risk Assessment for External Events

FACILITY NAME: C-AD
SYSTEM: Entire Facility
SUB-SYSTEM: N/A
HAZARD: External Event (Earthquake, Tornado, Hurricane, Flood, Aircraft Impact, Forest Fire)

Event	External event impacts C-AD
Possible Consequences, Hazards	Personnel injuries, equipment/building damage or programmatic impact
Potential Initiators	Earthquake, severe weather, flooding, forest fire, aircraft impact

Risk Assessment Prior to Mitigation

Note: Refer to Chapter 4 for an explanation of consequence, frequency and risk levels. "Low" and "Extremely Low" risk levels are considered acceptable.

Consequence	(X) High	() Medium	() Low	() Extremely Low
Frequency	() Anticipated High	() Anticipated Medium	() Unlikely	(X) Extremely Unlikely
Risk Category	() High Risk	() Medium	(X) Low Risk	() Extremely Low

Hazard Mitigation	1. Building designed to Uniform Building Code 2. Relatively small radioactive inventory cannot cause offsite health effects 3. BNL Fire Department can respond quickly to forest fire. BNL has firebreaks 4. No active systems needed to protect personnel from adverse health effects after accelerator off 5. Severe weather and flooding potential is extremely low; warning of these impending hazards will allow for accelerator shutdown and for personnel safety 6. BNL Wildfire Prevention Program

Risk Assessment Following Mitigation

Consequence	() High	() Medium	(X) Low	() Extremely Low
Frequency	() Anticipated High	() Anticipated Medium	() Unlikely	(X) Extremely Unlikely
Risk Category	() High Risk	() Medium	() Low Risk	(X) Extremely Low

Is the mitigated hazard adequately controlled by BNL SBMS requirements? Y/N Yes If No, consider requesting a change to BNL SBMS.

Is a Credited Control or Support needed for hazard control? Y/N No If Yes, consider implementing a Credited Control and documenting in the ASE.

Table A2-3 Hazards and Risk Assessment for Electric Shock

FACILITY NAME: C-AD
SYSTEM: Facility
SUB-SYSTEM: Magnets, Power Supplies, Instrumentation
HAZARD: Electric Shock from Exposed Conductors

Event	Worker contacts energized conductor
Possible Consequences, Hazards	Shock, impact injury, burns
Potential Initiators	Worker falls, fails to control position of limbs or tools, equipment failure, improper work controls

Risk Assessment Prior to Mitigation

Note: Refer to Chapter 4 for an explanation of consequence, frequency and risk levels. "Low" and "Extremely Low" risk levels are considered acceptable.

Consequence	(X) High	() Medium	() Low	() Extremely Low
Frequency	(X) Anticipated High	() Anticipated Medium	() Unlikely	() Extremely Unlikely
Risk Category	(X) High Risk	() Medium	() Low Risk	() Extremely Low

Hazard Mitigation	1. Exposed conductors and terminals are covered for protection of personnel as per BNL and C-AD Electrical Safety requirements 2. Training for workers / experimenters 3. Use of work planning, LOTO and Electrical Work Permits 4. Magnets de-energized when routine access allowed into tunnels/rings or are completely protected from personal contact 5. Review is performed for electrical safety on all non-commercial 'in-house' built equipment. Review is by a qualified Electrical Equipment Inspector

Risk Assessment Following Mitigation

Consequence	() High	() Medium	() Low	(X) Extremely Low
Frequency	() Anticipated High	() Anticipated Medium	(X) Unlikely	() Extremely Unlikely
Risk Category	() High Risk	() Medium	() Low Risk	(X) Extremely Low

Is the mitigated hazard adequately controlled by BNL SBMS requirements? Y/N Yes If No, consider requesting a change to BNL SBMS.

Is a Credited Control or Support needed for hazard control? Y/N No If Yes, consider implementing a Credited Control and documenting in the ASE.

Table A2-4 Hazards and Risk Assessment Radiation Exposure Outside Enclosures

Facility Name: C-AD
System: Areas Outside Beam Enclosures, Hot Boxes or Hot Cells
Sub-System: Accelerator Berm Shields, Beam-line Shields, Entrances to Accelerators , Target Areas and Experimental Areas, Penetrations to Beam Enclosures, Hot Cells, Hot Boxes
Hazard: Prompt Beam Radiation Outside of Beam Enclosures, Hot Cells or Hot Boxes

Event	Credible beam control fault
Possible Consequences, Hazards	Unwarranted radiation exposure due to abnormal radiation levels outside concrete and earth berm shielding, fenced areas, penetrations and chicanes, hotboxes, hot cells
Potential Initiators	Failure of magnet or magnet power supply, inefficient beam tuning, failure to control doors to hot cells or opening to hot boxes

Risk Assessment Prior to Mitigation

Note: Refer to Chapter 4 for an explanation of consequence, frequency, and risk levels. “Low” and “Extremely Low” risk levels are considered acceptable.

Consequence	() High	() Medium	() Low	(X) Extremely Low
Frequency	(X) Anticipated High	() Anticipated Medium	() Unlikely	() Extremely Unlikely
Risk Category	() High Risk	() Medium	(X) Low Risk	() Extremely Low

Hazard Mitigation	1. Beam information display and operating procedures 2. Beam tuned at low intensity 3. Operator / Physicist / Chemist / User training 4. Review of design of shields and penetrations by C-A RSC 5. Radiological area postings, fenced gates interlocked with beam, locked gates, locked hot boxes or locked hot cells 6. Area radiation monitors alarm locally and in MCR during periods of abnormal radiation levels 7. Area radiation monitors interlock beam for abnormal radiation levels 8. Sweep procedures prior to beam initiation 9. Beam intensity limits 10. Periodic inspection of earthen berm to verify integrity

Risk Assessment Following Mitigation

Consequence	() High	() Medium	() Low	(X) Extremely Low
Frequency	() Anticipated High	() Anticipated Medium	(X) Unlikely	() Extremely Unlikely
Risk Category	() High Risk	() Medium	() Low Risk	(X) Extremely Low

Is the mitigated hazard adequately controlled by BNL SBMS requirements? Y/N Yes If No, consider requesting a change to BNL SBMS.

Is a Credited Control or Support needed for hazard control? Y/N Yes If Yes, consider implementing a Credited Control and documenting in the ASE.

Table A2-5 Hazards and Risk Assessment for Radiation Exposure Inside Enclosures

FACILITY NAME: C-AD
SYSTEM: Beam Enclosures
SUB-SYSTEM: C-AD Beam Line Tunnel, Target Room
HAZARD: Prompt Beam Radiation inside Beam Enclosures

Event	Person inside enclosure during beam operation
Possible Consequences, Hazards	Personal injury or death due to external prompt radiation associated with beam
Potential Initiators	Person inadvertently enters enclosure; person fails to leave before beam initiated

Risk Assessment Prior to Mitigation

Note: Refer to Chapter 4 for an explanation of consequence, frequency and risk levels. "Low" and "Extremely Low" risk levels are considered acceptable.

Consequence	(X) High	() Medium	() Low	() Extremely Low
Frequency	() Anticipated High	(X) Anticipated Medium	() Unlikely	() Extremely Unlikely
Risk Category	() High Risk	(X) Medium	() Low Risk	() Extremely Low

Hazard Mitigation	1. Operating procedures 2. Worker / User training 3. Review of facility design for radiation safety by C-A RSC 4. Tunnel/target room sweep procedures 5. ACS door locks and other access controls 6. Audible/visual alarms initiated by ACS inside enclosures before beam initiation, allowing sufficient time for un-swept individuals to manually stop beam initiation or exit enclosure to stop beam initiation 7. ACS automatic interlock to stop beam given access violation 8. ACS controls critical devices to automatically confine beam to enclosure, thus keeping beam out of downstream section with personnel inside

Risk Assessment Following Mitigation

Consequence	() High	() Medium	(X) Low	() Extremely Low
Frequency	() Anticipated High	() Anticipated Medium	() Unlikely	(X) Extremely Unlikely
Risk Category	() High Risk	() Medium	() Low Risk	(X) Extremely Low

Is the mitigated hazard adequately controlled by BNL SBMS requirements? Y/N Yes If No, consider requesting a change to BNL SBMS.

Is a Credited Control or Support needed for hazard control? Y/N Yes If Yes, consider implementing a Credited Control and documenting in the ASE.

Table A2-6 Hazards and Risk Assessment for Activated Components

FACILITY NAME: C-AD
SYSTEM: Beam Dump, Targets, Other Activated Components
SUB-SYSTEM: N/A
HAZARD: External Radiation from Activated Beam Dump, Activated Magnets, BLIP Targets and Other Components

Event	Worker / User inside target room or tunnel during beam off periods
Possible Consequences, Hazards	Excessive external dose
Potential Initiators	Improper work planning, procedure violation

Risk Assessment Prior to Mitigation

Note: Refer to Chapter 4 for an explanation of consequence, frequency and risk levels. "Low" and "Extremely Low" risk levels are considered acceptable.

Consequence	() High	() Medium	() Low	(X) Extremely Low
Frequency	(X) Anticipated High	() Anticipated Medium	() Unlikely	() Extremely Unlikely
Risk Category	() High Risk	() Medium	(X) Low Risk	() Extremely Low

Hazard Mitigation	1. Beam tuning keeps activation of magnets and beam–line components to a minimum 2. Integrated Safety Management program assures proper work planning prior to authorizing start of work 3. Radiological surveys of work areas performed and RWP issued prior to start of work 4. ALARA design and administrative controls assure doses are well below regulatory limits 5. C-A ALARA Committee reviews jobs and facility designs. 6. Worker / User training 7. Radiological postings warn personnel of high dose rates 8. Personnel entering High Radiation Areas must wear alarming self-reading dosimeters 9. BLIP Target casks; hot cells and hot boxes

Risk Assessment Following Mitigation

Consequence	() High	() Medium	() Low	(X) Extremely Low
Frequency	() Anticipated High	(X) Anticipated Medium	() Unlikely	() Extremely Unlikely
Risk Category	() High Risk	() Medium	() Low Risk	(X) Extremely Low

Is the mitigated hazard adequately controlled by BNL SBMS requirements? Y/N Yes If No, consider requesting a change to BNL SBMS.

Is a Credited Control or Support needed for hazard control? Y/N No If Yes, consider implementing a Credited Control and documenting in the ASE.

Table A2-7 Hazards and Risk Assessment for Conventional/Industrial Equipment

FACILITY NAME: C-AD
SYSTEM: Entire Facility
SUB-SYSTEM: N/A
HAZARD: Noise, Heat, Confined Spaces, Lasers, Rotating Equipment, Pressurized Systems, Hazardous Atmospheres, Magnetic and RF Fields, Hoisting, Rigging, Heights, Cryogenic Fluids, Chemicals, Flammable / Explosive Gases, Falling Objects, Hot Surfaces, Trip Hazards, Welding/Cutting, Excavation

Event	Injury resulting from industrial hazard
Possible Consequences, Hazards	Worker/experimenter injury or death
Potential Initiators	Improper work planning, procedure violation

Risk Assessment Prior to Mitigation

Note: Refer to Chapter 4 for an explanation of consequence, frequency and risk levels. "Low" and "Extremely Low" risk levels are considered acceptable.

Consequence	(X) High	() Medium	() Low	() Extremely Low
Frequency	(X) Anticipated High	() Anticipated Medium	() Unlikely	() Extremely Unlikely
Risk Category	(X) High Risk	() Medium	() Low Risk	() Extremely Low

Hazard Mitigation	1. Integrated Safety Management program assures proper work planning prior to authorizing start of work 2. Worker / User training 3. Review and audit of conventional safety issues by C-A staff and ESH experts during Tier 1, work planning and/or ESH appraisals as required by the BNL Integrated Assessment Program 4. Review of experimental safety by C-A ESRC 5. Review of accelerator system safety by ASSRC 6. Uniform laboratory safety requirements defined by BNL SBMS 7. Environmental review of experiments 8. Industrial hygiene review of experiments 9. New designs incorporate requirements of BNL SBMS and industrial standards for conventional and industrial safety via Design Review Questionnaire 10. Formal C-AD Worker, Safety and Health Program 11. OHSAS 18001 registration 12. Facility and Job Risk Assessments 13. Manager and Supervisor Work Observation programs

Risk Assessment Following Mitigation

Consequence	() High	() Medium	(X) Low	() Extremely Low
Frequency	() Anticipated High	(X) Anticipated Medium	() Unlikely	() Extremely Unlikely
Risk Category	() High Risk	() Medium	(X) Low Risk	() Extremely Low

Is the mitigated hazard adequately controlled by BNL SBMS requirements? Y/N Yes If No, consider requesting a change to BNL SBMS.

Is a Credited Control or Support needed for hazard control? Y/N No If Yes, consider implementing a Credited Control and documenting in the ASE.

Table A2-8 Hazards and Risk Assessment for Airborne Radioactive Releases

FACILITY NAME: C-AD
SYSTEM: Ventilation
SUB-SYSTEM: Exhaust Systems
HAZARD: Radioactive or Hazardous Materials

Event	Uncontrolled release of airborne radioactive or hazardous materials
Possible Consequences, Hazards	Adverse health effects to workers; public health effects from BLIP stack
Potential Initiators	Improper work planning, violation of procedures, human error

Risk Assessment Prior to Mitigation

Note: Refer to Chapter 4 for an explanation of consequence, frequency and risk levels. "Low" and "Extremely Low" risk levels are considered acceptable.

Consequence	() High	() Medium	(X) Low	() Extremely Low
Frequency	(X) Anticipated High	() Anticipated Medium	() Unlikely	() Extremely Unlikely
Risk Category	() High Risk	() Medium	(X) Low Risk	() Extremely Low

Hazard Mitigation	1. Integrated Safety Management program assures proper work planning prior to authorizing start of work 2. Worker / User training 3. Review of conventional safety by C-A ASSRC 4. Review of experimental safety by C-A ESRC 5. Review of BLIP targets by RSC 6. Safety standards defined by BNL SBMS 7. BNL Environmental Management System 8. BNL Chemical Management System 9. Testing of HEPA filters and periodic replacement as required by BNL SBMS 10. Design incorporates requirements of BNL SBMS and ANSI standards for elevated stacks 11. Minimum ventilation or negative pressure requirements 12. Stack emission monitoring and site-boundary dose limits

Risk Assessment Following Mitigation

Consequence	() High	() Medium	() Low	(X) Extremely Low
Frequency	() Anticipated High	(X) Anticipated Medium	() Unlikely	() Extremely Unlikely
Risk Category	() High Risk	() Medium	() Low Risk	(X) Extremely Low

Is the mitigated hazard adequately controlled by BNL SBMS requirements? Y/N Yes If No, consider requesting a change to BNL SBMS.

Is a Credited Control or Support needed for hazard control? Y/N Yes If Yes, consider implementing a Credited Control and documenting in the ASE.

Table A2-9 Hazards and Risk Assessment for Liquid Radioactive Releases

FACILITY NAME: C-AD
SYSTEM: Cooling Water and Waste Water Systems
SUB-SYSTEM: Radioactive Water
HAZARD: Soil and Groundwater Contamination

Event	Spill of activated cooling water to soil
Possible Consequences, Hazards	Groundwater contamination, internal dose to BNL personnel or public
Potential Initiators	Water pressure boundary failure, procedure violation, improper work planning

Risk Assessment Prior to Mitigation

Note: Refer to Chapter 4 for an explanation of consequence, frequency and risk levels. "Low" and "Extremely Low" risk levels are considered acceptable.

Consequence	() High	() Medium	(X) Low	() Extremely Low
Frequency	() Anticipated High	(X) Anticipated Medium	() Unlikely	() Extremely Unlikely
Risk Category	() High Risk	() Medium	(X) Low Risk	() Extremely Low

Hazard Mitigation	1. Work planning prior to authorizing start of work 2. Worker / User training 3. Review of safety by C-A ASSRC and ESRC 4. Requirements defined by BNL SBMS for piping and containment 5. BNL Environmental Management System 6. BNL Chemical Management System 7. Extensive groundwater monitoring program 8. Site suited for easy groundwater plume characterization 9. It would take decades for an un-remediated plume to migrate offsite to contaminate a drinking water well; this assures that even if un-remediated, no one would drink contaminated water 10. Periodic replacement of activated cooling water with fresh water to reduce activity levels in water systems 11. Suffolk County Article 12 Code is followed in the design of cooling water systems and piping that contain significant amounts of tritium 12. The laboratory maintains contingency storage facilities should water tankers with tritiated water develop leaks 13. Tankers stored in Suffolk County registered secondary containments

Risk Assessment Following Mitigation

Consequence	() High	() Medium	() Low	(X) Extremely Low
Frequency	() Anticipated High	() Anticipated Medium	(X) Unlikely	() Extremely Unlikely
Risk Category	() High Risk	() Medium	() Low Risk	(X) Extremely Low

Is the mitigated hazard adequately controlled by BNL SBMS requirements? Y/N Yes If No, consider requesting a change to BNL SBMS.

Is a Credited Control or Support needed for hazard control? Y/N No If Yes, consider implementing a Credited Control and documenting in the ASE.

Table A2-10 Hazards and Risk Assessment for Loss of Electrical Power

FACILITY NAME: C-AD
SYSTEM: Entire Facility
SUB-SYSTEM: N/A
HAZARD: Hazards Produced As Power Is Lost To Equipment

Event	Loss of offsite power, local loss of power to C-AD facility
Possible Consequences, Hazards	Personal safety hazards, programmatic loss
Potential Initiators	Loss of electrical power to BNL site or local power loss to C-AD caused by equipment failure or operator error

Risk Assessment Prior to Mitigation

Note: Refer to Chapter 4 for an explanation of consequence, frequency and risk levels. "Low" and "Extremely Low" risk levels are considered acceptable.

Consequence	() High	() Medium	() Low	(X) Extremely Low
Frequency	(X) Anticipated High	() Anticipated Medium	() Unlikely	() Extremely Unlikely
Risk Category	() High Risk	() Medium	(X) Low Risk	() Extremely Low

Hazard Mitigation	1. Integrated Safety Management program assures proper work planning prior to authorizing start of work 2. Worker / User training 3. Review of conventional safety by C-A ASSRC and BNL ESH Committees 4. Review of experimental safety by C-A ESRC 5. Backup power supplied to required systems to reduce programmatic impact 6. Accelerator automatically shuts down upon loss of electrical power 7. ACS and PASS fail-safe design 8. Emergency lighting 9. BNL and C-AD emergency procedures

Risk Assessment Following Mitigation

Consequence	() High	() Medium	() Low	(X) Extremely Low
Frequency	() Anticipated High	(X) Anticipated Medium	() Unlikely	() Extremely Unlikely
Risk Category	() High Risk	() Medium	() Low Risk	(X) Extremely Low

Is the mitigated hazard adequately controlled by BNL SBMS requirements? Y/N Yes If No, consider requesting a change to BNL SBMS.

Is a Credited Control or Support needed for hazard control? Y/N No If Yes, consider implementing a Credited Control and documenting in the ASE.

Table A2-11 Hazards and Risk Assessment for Fire Event

FACILITY NAME: C-AD
SYSTEM: Entire Facility
SUB-SYSTEM: N/A
HAZARD: Personal Injury or Equipment Damage

Event	Magnets, power and control cables, laboratory equipment combustion
Possible Consequences, Hazards	Personal injury/death, programmatic impact
Potential Initiators	Loss of cooling to magnets or power supplies, transient combustibles start fire which spreads, electrical component overheating, flammable/combustible gas ignition, human error

Risk Assessment Prior to Mitigation

Note: Refer to Chapter 4 for an explanation of consequence, frequency and risk levels. "Low" and "Extremely Low" risk levels are considered acceptable.

Consequence	(X) High	() Medium	() Low	() Extremely Low
Frequency	() Anticipated High	(X) Anticipated Medium	() Unlikely	() Extremely Unlikely
Risk Category	() High Risk	(X) Medium	() Low Risk	() Extremely Low

Hazard Mitigation	1. Combustible loading is minimized at facilities 2. Periodic safety inspections 3. Safety training for Users and staff 4. Fire protection/suppression system is designated safety significant 5. Design reviewed by BNL Fire Protection Engineer 6. Design meets NFPA requirements 7. Emergency smoke removal ventilation in accelerators 8. Experiments reviewed by C-A ESRC 9. Conventional safety reviewed by C-A ESRC 10. Fire Hazards Analysis completed for C-AD and written/reviewed by a FP Engineer

Risk Assessment Following Mitigation

Consequence	() High	() Medium	(X) Low	() Extremely Low
Frequency	() Anticipated High	(X) Anticipated Medium	() Unlikely	() Extremely Unlikely
Risk Category	() High Risk	() Medium	(X) Low Risk	() Extremely Low

Is the mitigated hazard adequately controlled by BNL SBMS requirements? Y/N Yes If No, consider requesting a change to BNL SBMS.

Is a Credited Control or Support needed for hazard control? Y/N No If Yes, consider implementing a Credited Control and documenting in the ASE.

Table A2-12 Hazards and Risk Assessment for Groundwater Contamination

FACILITY NAME: C-AD
SYSTEM: Activated Soil Shielding
SUB-SYSTEM: N/A
HAZARD: Groundwater Contamination

Event	Groundwater contamination from activated soil
Possible Consequences, Hazards	Internal radiation dose, loss of regulator/public confidence
Potential Initiators	Soil cap failure, excessive beam loss in unexpected locations, cap design/installation errors

Risk Assessment Prior to Mitigation

Note: Refer to Chapter 4 for an explanation of consequence, frequency and risk levels. "Low" and "Extremely Low" risk levels are considered acceptable.

Consequence	() High	(X) Medium	() Low	() Extremely Low
Frequency	(X) Anticipated High	() Anticipated Medium	() Unlikely	() Extremely Unlikely
Risk Category	() High Risk	(X) Medium	() Low Risk	() Extremely Low

Hazard Mitigation	1. Beam tunnel and target room impermeable soil caps at known/anticipated beam loss locations 2. Periodic cap inspections 3. Beam tuning procedures to reduce soil activation 4. Operator / Physicist training 5. C-AD Environmental Management System 6. Extensive groundwater monitoring well system and sampling program in place 7. Long travel time for plume to reach BNL site boundary

Risk Assessment Following Mitigation

Consequence	() High	() Medium	(X) Low	() Extremely Low
Frequency	() Anticipated High	(X) Anticipated Medium	() Unlikely	() Extremely Unlikely
Risk Category	() High Risk	() Medium	(X) Low Risk	() Extremely Low

Is the mitigated hazard adequately controlled by BNL SBMS requirements? Y/N Yes If No, consider requesting a change to BNL SBMS.

Is a Credited Control or Support needed for hazard control? Y/N Yes If Yes, consider implementing a Credited Control and documenting in the ASE.

Table A2-13 Hazards and Risk Assessment for Biological/Medical Samples

FACILITY NAME: C-AD
SYSTEM: NASA Experimental Facilities
SUB-SYSTEM: NSRL or Beam Line in Building 912
HAZARD: Biological or Medical

Event	Release or contamination by biological or medical hazards
Possible Consequences, Hazards	Illness, programmatic impact
Potential Initiators	Failure to follow procedures, improper review of experiment, equipment failure

Risk Assessment Prior to Mitigation
Note: Refer to Chapter 4 for an explanation of consequence, frequency and risk levels. "Low" and "Extremely Low" risk levels are considered acceptable.

Consequence	() High	(X) Medium	() Low	() Extremely Low
Frequency	() Anticipated High	(X) Anticipated Medium	() Unlikely	() Extremely Unlikely
Risk Category	() High Risk	(X) Medium	() Low Risk	() Extremely Low

Hazard Mitigation	1. NSRL facility designed for Biosafety Level 2, which can safely handle blood, body fluids and tissues infected with unknown agents 2. General public excluded from NASA facility 3. Cell Facility separated from Animal Facility in building 4. Regulated Medical Wastes handled by properly trained BNL Medical Department Personnel 5. Biological Safety cabinets used to protect workers and users 6. Training of the user in safe laboratory practices, including engineered systems and PPE, is given by the BNL Medical Department, commensurate with risk to worker 7. Experiments with human cells and tissues reviewed by BNL Institutional Review Board 8. Transportation of cells, animals, etc., to and from the facility, will be in accordance with BNL requirements 9. Review of experiments by appropriate BNL committees, and by C-A ESRC 10. Review of experiment by industrial hygienist and ECR

Risk Assessment Following Mitigation

Consequence	() High	() Medium	() Low	(X) Extremely Low
Frequency	() Anticipated High	(X) Anticipated Medium	() Unlikely	() Extremely Unlikely
Risk Category	() High Risk	() Medium	(X) Low Risk	() Extremely Low

Is the mitigated hazard adequately controlled by BNL SBMS requirements? Y/N Yes If No, consider requesting a change to BNL SBMS.

Is a Credited Control or Support needed for hazard control? Y/N No If Yes, consider implementing a Credited Control and documenting in the ASE.

Table A2-14 Hazards and Risk Assessment for Oxygen Deficiency

FACILITY NAME: C-AD
SYSTEM: Accelerator and Experimental Facilities
SUB-SYSTEM: Cryogenic liquids, inert gas use/storage, Air Conditioning Systems
HAZARD: Oxygen Deficiency

Event	Breathing air displaced causing reduced oxygen concentration
Possible Consequences, Hazards	Illness, asphyxiation
Potential Initiators	Significant release of gases to area or room

Risk Assessment Prior to Mitigation
Note: Refer to Chapter 4 for an explanation of consequence, frequency and risk levels. "Low" and "Extremely Low" risk levels are considered acceptable.

Consequence	(X) High	() Medium	() Low	() Extremely Low
Frequency	() Anticipated High	(X) Anticipated Medium	() Unlikely	() Extremely Unlikely
Risk Category	() High Risk	(X) Medium	() Low Risk	() Extremely Low

Hazard Mitigation	1. ODH hazards analyzed and controls in place as per BNL SBMS requirements 2. Use of portable or fixed alarming oxygen concentration monitors 3. Training of Users and Staff 4. Work planning and LOTO 5. Review of ODH hazards and controls by C-AD ASSRC and ESRC 6. Review of ODH hazards and controls by BNL LESHC 7. Cryogenic designs meet ASME Code and appropriate consensus stands designs and testing requirements 8. Confined Space Entry Permitting Program 9. Energy limit in superconducting circuit at RHIC during tunnel occupancy 10. BNL and C-AD emergency procedures 11. Active exhaust ventilation systems supplied by normal and standby power if needed to minimize ODH risk

Risk Assessment Following Mitigation

Consequence	() High	(X) Medium	() Low	(X) Extremely Low
Frequency	() Anticipated High	() Anticipated Medium	(X) Unlikely	() Extremely Unlikely
Risk Category	() High Risk	() Medium	(X) Low Risk	() Extremely Low

Is the mitigated hazard adequately controlled by BNL SBMS requirements? Y/N Yes If No, consider requesting a change to BNL SBMS.

Is a Credited Control or Support needed for hazard control? Y/N Yes If Yes, consider implementing a Credited Control and documenting in the ASE

Table A2-15 Hazards and Risk Assessment for Hazardous Material Handling

FACILITY NAME: C-AD
SYSTEM: Accelerator and Experimental Facilities
SUB-SYSTEM: Beryllium Vacuum Pipes, Lead Bricks, Asbestos Building Materials
HAZARD: Inhalation of Hazardous Materials

Event	Working with or handling Be, Pb or asbestos items creates airborne concentrations of hazardous materials
Possible Consequences, Hazards	Illness, toxic reactions
Potential Initiators	Improper work planning, violation of procedures, human error

Risk Assessment Prior to Mitigation
Note: Refer to Chapter 4 for an explanation of consequence, frequency and risk levels. "Low" and "Extremely Low" risk levels are considered acceptable.

Consequence	() High	(X) Medium	() Low	() Extremely Low
Frequency	() Anticipated High	(X) Anticipated Medium	() Unlikely	() Extremely Unlikely
Risk Category	() High Risk	(X) Medium	() Low Risk	() Extremely Low

Hazard Mitigation	1. Airborne hazards are analyzed and controls in place as per BNL SBMS requirements 2. Integrated Safety Management program assures proper work planning prior to authorizing start of work 3. Worker / User training 4. Review of conventional safety by C-A ASSRC 5. Review of experimental safety by C-A ESRC 6. Safety standards defined by BNL SBMS 7. BNL Environmental Management System 8. BNL Chemical Management System 9. Testing of HEPA filters and periodic replacement as required by BNL SBMS 10. Work plan incorporates requirements of BNL SBMS and standards for Be, Pb or asbestos safety 11. Active exhaust ventilation systems supplied by normal and standby power if needed to minimize risk

Risk Assessment Following Mitigation

Consequence	() High	(X) Medium	() Low	(X) Extremely Low
Frequency	() Anticipated High	() Anticipated Medium	(X) Unlikely	() Extremely Unlikely
Risk Category	() High Risk	() Medium	(X) Low Risk	() Extremely Low

Is the mitigated hazard adequately controlled by BNL SBMS requirements? Y/N Yes If No, consider requesting a change to BNL SBMS.

Is a Credited Control or Support needed for hazard control? Y/N No If Yes, consider implementing a Credited Control and documenting in the ASE

Accelerator Safety Envelope

Title of Facility: Prototype Energy Recovery Linac (ERL)

Date of Initial ASE: 12/2008

Subsequent Revision Dates: 5/2011, 6/2012

Signature of Preparer:

Edward T. Lessard 6-6-12

Signature of Collider-Accelerator Associate Chair for Accelerator R&D:

Ilan Ben-Zvi

Signature of Collider-Accelerator Department Chair:

Thomas Roser

Signature of Nuclear and Particle Physics Associate Laboratory Director:

P. Vigdor

Signature of Assistant Laboratory Director for Environment, Safety & Health:

M A Morris 6/21/12

This ASE is associated with the
May 2011
C-AD Safety Assessment
Document

Section 1: Introduction

This ASE defines the Prototype ERL ASE Credited Controls and their Supports that are unique to accelerators necessary to ensure safe operations and to ensure that the potential accelerator-related risks to the public, workers and environment are minimized. Other legal and DOE Order requirements not unique to accelerators are implemented via compliance with the BNL Standards Based Management System (SBMS) Subject Areas.

1.1. The method used by the Collider-Accelerator Department (C-AD) for change control of this ASE is described in the BNL Subject Area on Accelerator Safety.

1.2. A variation away from the Credited Controls and their Supports, which are described in Sections 2, 3, and 4 of this ASE, must be treated as a violation of the ASE and must be a reportable occurrence, as defined by the BNL SBMS Subject Area on Occurrence Reporting. A violation is defined as not satisfying a Credited Control, its Supports or its Authorized Alternative. C-AD staff must make notifications of occurrences according to the requirements in the C-AD Operations Procedure Manual.

1.3. Section 5, Administrative Controls, are not Credited Controls but provide defense-in-depth that supports compliance with the requirements in Sections 2 through 4. A violation of Section 5 requirements will be evaluated by management to determine if a reportable occurrence is needed.

1.4. If a Credited Control or its Supports are not satisfied and it has a specific Authorized Alternative, then take immediate actions to implement the Authorized Alternative or stop the activity that uses the affected equipment as soon as practicable.

1.5. If a Credited Control Requirement or its Supports have no specific Authorized Alternative and is not satisfied, then stop the activity that uses the affected Credited Control as soon as practicable.

1.6. Emergency actions may be taken that depart from a Credited Control or its Supports when no actions consistent with the Credited Control are immediately apparent and when these actions are needed to protect the public, worker and environmental safety. These emergency actions must be approved by the person in charge of facility safety, as defined in the operating procedures, when the emergency occurs and must be reported to C-AD management within 2-hours.

Section 2: Credited Controls

This section contains the Credited Controls that limit accelerator operations in order to protect the environment, workers, and the public by ensuring that those operations are conducted within the assumptions in the approved C-AD SAD. Credited Controls for Prototype ERL operations are:

Credited Controls for Maximum Credible Incident

The following limits are the maximum beam energy and beam power that the Prototype ERL is capable of. These Credited Controls cannot be exceeded without changing the structures, systems and components (SSC) of the Prototype ERL. Changing Prototype ERL SSC requires authorization by C-AD management.

2.1. Electron kinetic energy must be limited to 3.5 MeV for the superconducting RF gun.

2.2. The power source of the superconducting gun must be limited to delivering 1.5 MW of power to the gun.

2.3. Electron kinetic energy limit must be limited to 25 MeV for the Prototype ERL ring.

2.4. Electron beam power must not exceed the equivalent of 10 MW of instantaneous power for the electron beam in the Prototype ERL ring.

2.5. The power source for the five-cell cavity must be limited to delivering a maximum of 60 kW of power to the cavity.

2.6. Beam power must not exceed 1.5 MW for a 3.5 MeV electron beam striking the beam dump.

Credited Control for Radiation Hazard Due to Access

2.7. During beam operations, an access control system (ACS) must prevent access to beam.

Credited Control for Oxygen Deficiency Hazard (ODH)

2.8. Engineered systems (interlocks and alarms) must be in place to minimize the likelihood of injury/illness from a release of inert gas.

Section 3: Credited Control Supports

This section identifies the measurable limitations on Supports for Credited Controls that ensure that Prototype ERL operations do not exceed the Credited Controls in Section 2. These Credited Control Supports are derived from the safety analyses described in the approved C-AD SAD. They are:

Credited Control Supports to Protect against Radiation

3.1. Before beam or other radiation producing operations (e.g. electron gun or 5-cell cavity operations and testing), Prototype ERL enclosures must have all shielding properly in place and configuration controlled.

3.2. During beam or other radiation producing operations (e.g. electron gun or 5-cell cavity operations and testing), the ERL ACS must be functional. This means that the portions of the ACS that prevent exposure to beam radiation or RF generated x-rays inside enclosures and that remove beam or turn off RF when excessive beam loss or x-ray radiation occurs are functional.

3.3. During the beam or other radiation producing operations, area radiation monitors that are interfaced with the ERL ACS to remove beam when excessive beam loss is sensed must be within their calibration date.

3.4. During beam or other radiation producing operations, the locations of area radiation monitors interfaced with the ERL ACS must be configuration controlled.

Credited Control Supports to Protect against an ODH in ERL Accelerator Enclosure, Compressor/Vacuum/Water Building, and the EEBA[1] and NEBA[2] Portions of B912

3.5. When cryogens are charged in the system, exhaust fans and the ODH portion of the ERL ACS must be operable, that is, when the oxygen concentration falls below 18% (nominal) in either the ERL accelerator enclosure or the ERL Compressor/Vacuum/Water Building the associated ODH fan must turn on.

Authorized Alternative: Upon discovery that either exhaust fan is not operable or the ODH portion of the ERL ACS is out of service, entry to the affected building (i.e., ERL accelerator enclosure or ERL Compressor/Vacuum/Water building) is allowed if each entrant has their own 5-minute escape pack (or a self-contained breathing apparatus) and a portable oxygen monitor.

3.6. If the liquid nitrogen (LN) supply line inside Building 912 is charged with LN, and this line is not isolated from the 11,000-gallon LN tank, then the installed building oxygen

[1] East Experimental Building Addition
[2] Northeast Experimental Building Addition

monitors in EEBA, NEBA and the LVTF[3] must alarm locally if the oxygen concentration falls below 18% (nominal).

Authorized Alternative: Upon discovery that any installed oxygen monitor in EEBA, NEBA, ERL or the LVTF is out of service, then entry into EEBA or NEBA portions of Building 912 is allowed as long as requirement 3.7 is satisfied.

3.7. If any of the ODH monitors in NEBA, EEBA, ERL, or the LVTF sense oxygen concentration at 18% (nominal) or fail to be able to sense oxygen levels, then the air-operated valve at the 11,000 gallon LN tank located outside B912 must automatically close to isolate the LN supply to B912.

Authorized Alternative: Upon discovery that the automatic isolation valve at the LN tank is inoperable, the entire EEBA, NEBA portion of B912 including LVTFand SVTF[4] blockhouses and ERL accelerator enclosure, must be emptied of personnel as soon as practicable. Subsequent entry will only be allowed if the LN tank manual isolation valve is closed.

[3] The LVTF is not part of the ERL or its support system but it has a feature that can create an ODH in the EEBA portion of B912.

[4] Small Vertical Test Facility which is not part of the ERL or its support system but is located in EEBA and can be affected by an ODH condition in EEBA

Section 4: Calibration, Testing, Maintenance and Inspection that Supports Credited Controls

The calibration, testing, maintenance or inspections needed to support Credited Controls are:

4.1. The Access Control System must be functionally tested in accordance with requirements in the BNL Radiation Control Manual.

4.2. Area radiation monitors must undergo annual calibration (not to exceed 15 months).

4.3. If cryogens are charged in the system, the ventilation exhaust fans and associated oxygen monitors used to mitigate an oxygen deficiency event must undergo annual testing (not to exceed 15 months).

4.3.1. The ability of the air-operated valve at the 11,000 gallon LN tank outside B912 to isolate the LN tank if any ODH monitor in ERL, NEBA, EEBA or LVTF indicates less than 18% (nominal) oxygen concentration, or if any ODH sensor fails, must be functionally checked annually (not to exceed 15 months).

4.4. Radiological shielding and barriers (e.g., shield blocks, fencing, etc.) must undergo visual inspection prior to operations to ensure that they are in place and functional.

Section 5: Administrative Controls

Administrative controls provide defense-in-depth to help ensure the operational integrity of the Credited Controls during operations. These administrative controls are:

5.1. Minimum Prototype ERL Control Room Staffing

5.1.1. Prototype ERL Control Room: one qualified Operator and one other person (i.e., ERL Operator-in-Training or ERL Physicist) must be on duty when Prototype ERL beam is in operation. During beam operations, one of the two people must remain in the Prototype ERL Control Room at all times.

Authorized Alternative: If the extra person (i.e., ERL Operator-in-Training or ERL Physicist) is incapacitated, the qualified Trained Operator may continue operations as long as manning requirements are restored within two hours.

5.2. Prototype ERL Modification and Controls

5.2.1. Approved Configuration Control procedures must be used to ensure review of modifications against Credited Controls in ASE requirements.

5.2.2. Each Prototype ERL experiment or re-configuration of accelerator components, if any, must be reviewed by C-AD for Configuration Control and safety before running with beam.

5.2.3. An experiment or reconfiguration of the accelerator may lie dormant for a period greater than one year and not require a review during the dormancy period. For experiments that may run more than once in a 12-month period, review must occur as determined by C-AD management before each scheduled run.

5.2.4. Modifications to the Prototype ERL that are determined to increase the frequency or consequences of known hazards or which introduce new hazards must be documented using the Unreviewed Safety Issue Determination (USID) process. If a positive USID exists, the modification may not be implemented without DOE approval.

5.3. Beam loss induced radiation within uncontrolled areas for credible repeated losses must be less than 100 mrem in a year. C-AD shall use BNL's environmental TLD monitors to check the effectiveness of the C-AD radiation control program.

5.4. ODH area classification must comply with the requirements in the BNL SBMS Subject Area, ODH Classification/Controls.

Department of Energy
Brookhaven Site Office
P.O. Box 5000
Upton, New York 11973

JUN 26 2012

Mr. George A. Goode
Brookhaven Science Associates, LLC
Brookhaven National Laboratory
Upton, New York 11973

Dear Mr. Goode:

SUBJECT: APPROVAL OF THE PROTOTYPE ENERGY RECOVERY LINAC (ERL) ACCELERATOR SAFETY ENVELOPE (ASE)

Reference: Letter from G. Goode, BSA, to M. Holland, SC-BHSO, Subject: Request for Approval of Prototype ERL ASE, dated June 6, 2012.

The Department of Energy (DOE) Brookhaven Site Office (BHSO) has reviewed your request for approval of the revised ERL ASE, including a review of all associated documents. Based on our review, the revised ERL ASE and the Unreviewed Safety Issue (USI) pertaining to the 11,000 Gallon LN2 tank ODH Hazard are approved.

If you have any questions, please contact Patrick Sullivan, of my staff, at extension 4092.

Sincerely,

M. Holland

Michael D. Holland
Site Manager

cc: R. Desmarais, SC-BHSO
F. Crescenzo, SC-BHSO
P. Sullivan, SC-BHSO
C. Conrad, BSA
S. Kane, BSA
R. Karol, BSA
E. Lessard, BSA
E. Nowak, BSA
T. Roser, BSA
G. Shepherd, BSA
S. Vigdor, BSA

C-AD Unreviewed Safety Issue (USI) Determination Form

Title of USI Determination: ERL ODH Hazard in NEBA and EEBA from 11000 Gallon LN2 Tank

Description of USI Determination (use attachments): See Attachment 1

Title and Date of Relevant SAD: Collider-Accelerator Department (C-AD) Safety Assessment Document (SAD), May 2011

Associate Chair for ESSHQ or ESSHQ Division Head must initial all applicable determinations and actions. Write N/A for non-applicable. Leave no blanks.

Determinations and Actions	Initial or Indicate N/A
Determination: The current SAD and/or ASE addresses the hazard associated with the proposed work, event or activity.	[N/A]
Determination: This activity does not constitute a USI.	[N/A]
Action: Use this Form, the USI Checklist and attached description, if any, to document the USI Determination until the next revision of the SAD.	[RK]
Action: Include this USI Determination as a reference on the ESSHQ Division website "Authorization Bases" after approval by the C-AD Associate Chair for ESSHQ.	[RK]
Determination: The hazard associated with the proposed work is not analyzed or is not correctly bounded in the C-AD SAD and/or it is not controlled by an ASE.	[RK]
Action: Submit the USI or a revised SAD and/or ASE to the BNL ESH Committee.	[RK]
Action: Do not perform activity until BNL has approved.	[RK]
Action: Do not perform activity until DOE has approved.	[RK]

Signature on File — 4-24-12

Signature of C-AD ESSHQ Division Head — Date

Signature on File — 4-24-12

Signature of C-AD Associate Chair for ESSHQ — Date

Attachment 1
ERL ODH Hazard in NEBA and EEBA from 11000 Gallon LN2 Tank

In order to efficiently supply refrigeration of helium for the prototype Energy Recovery Linac (ERL) in the NEBA portion of B912 and the Vertical Test facility (VTF) in the EEBA portion of B912, the refrigerator has been combined into one system. The combined system design is different than that assumed in the May 2011 C-AD SAD. Because of this modified cryogenic plant design, the ODH hazards for the various areas which contain equipment operated by the Accelerator R&D Division has been revisited to determine the adequacy of the ODH analyses and classifications described in the SAD[1].

The following specific areas were analyzed to determine the proper ODH Controls necessary to protect personnel and to comply with the BNL SBMS Subject Area, ODH Classification and Controls:

1. Building 912 High Bay (EEBA) which houses the VTF, portions of the helium refrigeration system and the Little Block House (LBH). This portion was previously reviewed and found not to be an ODH area. Based upon the new refrigeration design, it is now required to be classified as an ODH-0 area. The reason for this change is the fact that an 11000 gallon LN2 tank, stored outside of B912 has 1" piping throughout the north portion of EEBA. A conservative analysis of a failure of the LN2 line shows that the oxygen content in the EEBA portion of B912 can be reduced to ~14%. There are no active exhaust fans to ventilate this area and natural building volume exchanges were conservatively ignored in the oxygen transient analysis. To protect personnel, oxygen monitors will be installed in this building to alarm when the oxygen concentration falls to 18% (nominal), which will warn occupants to evacuate the area.
2. Building 912 NEBA which houses the ERL blockhouse. This portion was previously reviewed and found not to be an ODH area. Based upon the new refrigeration design, it is now required to be classified as an ODH-0 area. The reason for this change is the fact that an 11000 gallon LN2 tank, stored outside of B912 has 1" piping throughout the north portion of NEBA. A conservative analysis of a failure of the LN2 line shows that the oxygen content in the EEBA portion of B912 can be reduced to ~0%. There are no active exhaust fans to ventilate this area and natural building volume exchanges were conservatively ignored in the oxygen transient analysis. To protect personnel, oxygen monitors will be installed in this building to alarm when the oxygen concentration falls to 18% (nominal), which will warn occupants to evacuate the area.
3. The ERL blockhouse, located in the NEBA portion of B912, has a 12000 CFM exhaust fan and the oxygen transient following a failure of the 1" LN2 line in the blockhouse results in a minimum oxygen concentration of ~15%. Thus the classification of this area remains ODH-0 and no changes to the current ODH controls are necessary.
4. The ERL Pump Room which is outside and just north of B912, now referred to as the Compressor/Vacuum Pump/Water Pump Building, was reviewed and remains classified as an ODH-0 area. This building has a 2000 CFM exhaust fan that starts when the oxygen sensor detects 18% (nominal) oxygen. The conservatively computed minimum oxygen concentration is found to be ~14.5%. Thus there are no changes to ODH controls for this building.

[1] C-AD Engineering Design Support Documentation Document Number 010604071 CAL-10: R. Than, ODH Analysis Bldg 912 ERL and VTF, Revision A.

5. The VTF blockhouse has no exhaust fan will never be occupied when the rolling roof is closed. There is an installed oxygen monitor above the personel platform grating of the blockhouse to warn personnel of an ODH hazard before the rolling roof is opened to allow access at the top of the blockhouse. This facility is not required to have an SAD or ASE; however it is described in the current C-AD ASE for completeness.
6. The Little Blockhouse Small Dewar Test Facility (LBH) is located in the EEBA portion of B912 near the VTF and the ERT/VTF cryogenics plant. This blockhouse has a 1000 CFM exhaust fan that is always on when the facility is occupied and charged with cryogens. The minimum oxygen concentration I this facility is ~14%. It remains posted as an ODH-1 area to remind staff to wear portable oxygen monitors POM), which alarm at 19.5% oxygen concentration when entering the blockhouse with cryogens present. Entrants do not need to have a 5-minute escape pack because it would take more time to don it than to exit the area. It should take no more than ~20 seconds to exit the area. Thus there are no changes to ODH controls for this building. This facility is not required to have an SAD or ASE; however it is described in the current C-AD ASE for completeness.

The following are attached to this USID in support of its conclusions:

1. C-AD Engineering Design Support Documentation Document Number 010604071 CAL-10: R. Than, ODH Analysis Bldg 912 ERL and VTF, Revision A.
2. Proposed changes to the C-AD SAD, Chapter 4, Safety Analyses.
3. Proposed Changes to the Prototype ERL ASE.

4. Chapter Four, Safety Analysis

Table of Contents

4. Chapter Four, Safety Analysis 1
4.1. Introduction 4
4.2. Safety Analysis Approach 4
4.2.1. General Approach to Risk Minimization 5
4.2.2. Risk Minimization Approach for Radiation Hazards 7
4.3. Hazard Identification and Qualitative Safety Analysis 7
4.4. Conventional- and Environmental-Hazards 8
4.5. Radiation Hazards 9
4.5.1. Source Terms and Calculated Radiation Fields 12
4.5.2. Preventing Exposure to Primary Beam and x-rays from HV Devices 14
4.5.3. Beam Faults and Chipmunks 17
4.6. 200-MeV Linac Shielding Analysis 18
4.7. Electron Beam Ion Source (EBIS) Shielding Analysis 22
4.8. TVDG and TtB Line Shielding Analysis 27
4.9. Booster Shielding Analysis 28
4.10. NASA Space Radiation Laboratory (NSRL) Shielding Analysis 33
4.11. Alternating Gradient Synchrotron (AGS) Shielding Analysis 36
4.11.1. U-Line for AGS Experiments Shielding Analysis 41
4.11.2. AGS to RHIC (AtR) Transfer Line Shielding Analysis 41
4.12. Collider (RHIC) Shielding Analysis 45
4.13. ERL Shielding Analysis 49
4.14. Induced Residual Activity 57
4.14.1. Activated Cooling Water 60
4.14.2. Soil Activation and Groundwater Contamination 62
4.15. Radiation Hazards at BLIP and RRPL 64
4.15.1. Prompt Radiation Hazards at BLIP 64
4.15.2. Radioactive Materials Hazards at BLIP 64
4.15.3. MCI for BLIP 65
4.15.4. Monitoring of, and Access to BLIP Radiation Hazards 66
4.15.5. Activated Cooling Water at the BLIP 66
4.15.6. Target Radioactivity in Cooling Water at BLIP 67
4.15.7. Cooling System Failures at the BLIP 67
4.15.8. Environmental Impacts from Water Releases at the BLIP 68
4.15.9. Soil Activation at BLIP 68
4.15.10. Credited Controls for Soil Activation at BLIP 69
4.15.11. Routine Airborne Activation and Emissions at BLIP 70
4.15.12. BLIP Target Gas Emissions 72
4.15.13. Particulate Emissions at the BLIP 72
4.15.14. Transporting Radioactive Materials from the BLIP 72
4.15.15. RRPL Radiological Hazards 73
4.15.16. RRPL Environmental Radiological Hazards 75
4.15.17. RRPL Accident Scenarios 75

4.15.18. RRPL and Inadvertent High-Level Radiation Exposure to Personnel 76
4.16. Oxygen-Deficiency Hazards 78
4.16.1. TVDG Oxygen-Deficiency Hazards 82
4.16.2. AGS Oxygen-Deficiency Hazards 83
4.16.3. g-2 Experiment (V-Line) Oxygen-Deficiency Hazards 84
4.16.4. RHIC Oxygen-Deficiency Hazards 84
4.16.5. ERL Oxygen Deficiency Hazards 88
4.16.6. Small Blockhouse Oxygen-Deficiency Hazards 89
4.16.7. Large Vertical Test Area (VTA) Oxygen-Deficiency Hazards 90
4.16.8. BLIP/RRPL Oxygen-Deficiency Hazards 90
4.17. Electrical Hazards 90
4.17.1. AC Distribution 91
4.17.2. High Voltage DC 91
4.17.3. High Current, Low Voltage 91
4.17.4. RF Voltages 92
4.18. Fire Hazards 92
4.19. Hazard Controls 93
4.19.1. Radiation Protection 93
4.19.2. Permanent Shielding and ALARA Dose 93
4.19.3. Permanent Shielding Materials 94
4.19.4. Radiation Detection and Radiation Interlocks 94
4.19.5. Control of Radioactive Materials and Sources 95
4.19.6. Portable Radiation Monitors 95
4.19.7. Frisking Instruments 95
4.19.8. Personnel Dosimetry 96
4.19.9. Access Controls Systems 96
4.19.10. Control and Use of Hazardous Materials 97
4.19.11. Electrical Safety 97
4.19.12. Lockout/Tagout Program 97
4.19.13. Safety Reviews and Committees 98
4.19.14. Training 98
4.19.15. Personal Protective Equipment 98
4.20. Significant Environmental Aspects and Impacts 98
4.21. Hazard Reduction Associated With Waste Generation and Handling 100
4.22. Fire Detection, Egress, Suppression, and Response 100
4.23. Routine Credible Failures 100
4.24. MCIs, Credited Controls, Credited Control Supports 101
4.24.1. MCI for Beam Fault Incidents and Credited Controls 101
4.24.2. MCI for Fire Incident and Credited Controls 102
4.24.3. MCI for Electrical Incident and Credited Control Support 103
4.24.4. MCI for ODH Incident and Credited Controls 104
4.24.5. MCI for Dispersible Radioactive Materials and Credited Controls 104
4.25. Risk Assessment to Workers, the Public, and the Environment 106
4.25.1. Radiation Risks 106
4.25.2. Infectious Microorganism Risks 107
4.25.3. Environmental Risks from Radiation 107

4.25.4. Environmental Risks from Biological Materials 107
4.25.5. Fire Risks 107
4.25.6. Electrical Risks 108
4.25.7. Injury Risks 108
4.26. Professional Judgment Issues 109
4.27. Methods Used in Evaluation of Radiological Hazards 109

Index of Tables and Figures

Table 4.2.1 Risk Matrix 6
Table 4.5.2.a Transverse Dose Rate for Full Primary Beam Loss 14
Table 4.5.2.b Dual Critical Devices for C-AD Enclosures 16
Table 4.5.2.c Absorbed Dose Rate near x-ray Sources 17
Table 4.6.1 Summary of Radiation Levels for Linac 21
Table 4.7 TVDG Measurements of Dose Rate from Deuteron Losses 23
Table 4.8 Calculated Radiation Levels in the TVDG Accelerator Room and the TtB 28
Table 4.9.a Summary of Booster Ion Beam Flux and Ion Beam Loss 29
Table 4.9.b Summary of Booster Flux Loss and Radiation Levels 30
Table 4.9.c Skyshine Dose for Booster Operation 33
Table 4.10.a Summary of Routine, Maximum, and Faulted Beam for the NSRL 34
Table 4.10.b Annual-Activity Released at NSRL 35
Table 4.11.a Summary of Operational Beam Loss Assumptions for AGS Ring 36
Table 4.11.b Proton Beam Loss and Location in the AGS Ring 37
Table 4.11.c Thickness of Top Shield 37
Table 4.11.d AGS Radiation Level Summary 39
Table 4.11.e Fault Levels at AGS Ring Penetrations 39
Table 4.11.2.a Annual Equivalent Dose at RHIC Scaled for Intensity Upgrade 42
Table 4.11.2.b Fault Equivalent Dose Rates 43
Table 4.11.2.c AtR TLD Data from Run 10 44
Table 4.13.a Parameters of the Prototype ERL in Building 912 51
Table 4.13.b Dose Outside Prototype ERL Enclosure for 3.5- and 25-MeV Electrons 53
Table 4.13.c Skyshine Dose-Rate Estimates From 25 MeV Beam Loss 54
Table 4.13.d Estimated Maximum Dose Rates and Fault Dose to Worker Near Penetrations 56
Table 4.14.b Locations of High-Intensity Loss in the AGS, and Activation Levels (R/h) 59
Table 4.14.c Typical Radioactivity in the C-AD's Closed Cooling-Water Systems 61
Table 4.15.9 Measured Soil Activation at BLIP 69
Figure 4.16.a Graph of the Fatality Factor 80
Table 4.16.b ODH Class and Fatality Rate 81
Table 4.16.c ODH Controls 81
Figure 4.16.d ODH Controls for Acute Effects of Oxygen Deficiency 82
Table 4.16.1 TVDG/TtB ODH Classifications 83
Table 4.16.4 - ODH Classification for Collider Buildings During Normal Operations 86
Table 4.16.5 Potential ODH Areas at ERL 88
Table 4.16.6 ODH Calculation Results for Small Blockhouse in B912 90
Figure 4.25.1 Decline in Radiation Worker Collective Dose (Person-Rem) 106
Figure 4.25.7 Annual DART and TRC Rates at C-AD 108

4.1. Introduction

The starting point for a safety analysis is a documented process to identify systematically all the hazards of a given operation. The C-AD accomplished this initial step using the C-AD Hazard Screening Tool and the C-AD Design Review Questionnaire employed for facility modifications since 2008, and through other methods for facilities built before 2008. The next step in a safety analyses is to describe and analyze the adequacy of measures taken to eliminate, control, or mitigate the hazards and risks of normal operation; the C-AD documented this information in Chapter 3. The final step in a safety analysis identifies potential accidents and assesses their associated likelihood and consequences; the C-AD documented this information in this Chapter 4.

The C-AD based the design of the ion injectors, accelerators, collider, and experimental facilities on the experience and successful designs employed since the initial proposal for the AGS in 1953. The basic approach for the safety analysis has been to review the potential hazards for each accelerator and accelerator facility at the C-AD. Safety analysis is the standard method for applying the DOE's graded approach for minimizing risk. It is well suited to identifying and understanding risk because it requires considering both the likelihood and the potential consequences of exposure to hazards; the product of the two constitutes the risk. In using risk as the measure of acceptance, the allowable consequences for low-likelihood events are higher than the high-likelihood ones. In the safety analyses presented in this chapter, the approach is to evaluate the risk and identify preventive and mitigating features and controls that ensure that risk is acceptably low. In some cases, the C-AD uses Credited Controls to help ensure acceptable risk. Because the C-AD follows consensus codes and standards listed in Section 3.3.1 of Chapter 3, the C-AD adopted the practice defined in the Accelerator Safety Order Guide and did not undertake safety analyses of standard industrial hazards. The C-AD controls their risks by complying with regulations; however, C-AD performed detailed safety analyses on several non-standard industrial hazards, viz., fire including explosions, ionizing radiation, oxygen deficiency from large quantities of inert gases, and electrical hazards because the extent or degree of these hazards was considered non-standard.

4.2. Safety Analysis Approach

Safety analysis includes identifying and screening hazards, assessing the potential consequences of unmitigated risk, identifying relevant, effective mitigation/preventive measures, and finally, assessing mitigated risk. Safety analysis clarifies risk, supporting informed decisions of risk acceptance. It is desirable to show that the risks from the C-AD's accelerator and accelerator facility are in the "extremely low" category; the C-AD has done so in this section of the SAD. The process of identifying hazards employed several sources: The C-AD's design and operating information; BNL's site documents; facility walk-downs to identify potential hazards that could adversely affect workers and environment; and, discussions with the engineers and users of the facilities. The safety evaluation largely is qualitative assessment of potential credible accidents or impacts in terms of hazards, initiators, likelihood estimates, preventive- or mitigating-features, and finally, estimates of the consequences to the public, the environment, and workers. The C-AD reached gross estimates of likelihood and consequences, so focusing attention on those potential accidents that are of greatest concern or pose the highest risk. The C-

AD generated a maximum credible incident scenario for the unique accelerator hazards in the complex discussed later in this chapter, the consequences of which bound all those to workers, the public, and the environment. The findings from these safety analyses confirm that the potential risks from accelerator operations and maintenance are extremely low.

The hazards at C-AD are similar to those present at all high-energy ion- and electron-accelerators and experiments, and are as follows:

- Ionizing radiation
- Non-ionizing radiation
- Hazardous and toxic materials
- Bio-hazards
- Chemicals
- Electrical energy
- Magnetic fields
- RF fields
- Potential energy hazards, such as pressure, vacuum, material lifting, heights
- Kinetic energy hazards, such as rotating or moving equipment, material handling
- Fire
- Explosive gases / compressed gases
- Natural phenomena, such as high winds and earthquake
- Steam
- Extreme heat and cold
- Confined spaces
- Oxygen deficiency
- Lasers

As discussed, other than fire from flammable gases, electrical energy, ionizing radiation, and oxygen deficiency, the scope of these hazards is within the norm encountered in industrial facilities and thus, they do not require an in-depth safety analysis.

4.2.1. General Approach to Risk Minimization

Identifying hazards produces a comprehensive list of those present in a process or facility; thereafter, the screening phase removes hazards below a threshold of concern. Hazards that are “screened out” do not need further study because their risks already are well understood and acceptable. This approach involves a creative, multi-person examination of the processes, operations, and experiments related to the C-AD facilities. A hazard is a source of danger with the potential to cause illness, injury, or death to personnel, damage to an operation, or environmental damage.

For each screened hazard retained for further detailed safety analysis, the C-AD first evaluates the unmitigated risk in terms of its likelihood and consequence using professional engineering judgment based on the design of the machine and the experiment and operating history. This process places the hazard on the risk matrix (see Table 4.2.1). The following assumptions govern the determinations of unmitigated risk:

- The unmitigated risk does not include safety or control systems
- Assigned frequencies are based on engineering judgment
- Assigned consequence can be qualitative, but must be conservative

- If the unmitigated risk is extremely low, then the analysis can stop; otherwise, one proceeds to evaluate mitigated risk

Table 4.2.1 Risk Matrix

Consequence Level ↑

High (Note 1)	Low Risk – Acceptable	Medium Risk- Unacceptable	High Risk- Unacceptable	High Risk- Unacceptable
Medium	Extremely Low Risk - Desirable	Low Risk – Acceptable	Medium Risk- Unacceptable	High Risk- Unacceptable
Low	Extremely Low Risk - Desirable	Extremely Low Risk - Desirable	Low Risk – Acceptable	Medium Risk- Unacceptable
Extremely Low	Extremely Low Risk - Desirable	Extremely Low Risk - Desirable	Extremely Low - Desirable	Low Risk – Acceptable
	Extremely Unlikely ($<10^{-4}$/y)	Unlikely (Between 10^{-4}/y and 10^{-2}/y)	Anticipated (Note 2) Medium (Between 10^{-2}/y and 10^{-1}y)	Anticipated (Note 2) High ($>10^{-1}$y)

Likelihood of Occurrence →

Note 1: Definition of Consequence Levels -

- Extremely Low: Extremely low risk events will not entail a significant injury or occupational illness nor significantly affect the environment.
- Low: Low risk events are those that may cause minor injury or minor occupational illness or have a small impact on the environment.
- Medium: Medium-risk events are events that may have considerable impact onsite or a minor impact offsite. These events may cause deaths, severe injuries, or severe occupational illness to personnel, major damage to a facility, or minor effect on the environment. Medium risk events are those from which a return to operation is possible.
- High: High-risk events may cause serious impact onsite or offsite, including deaths or loss of facility/operation. High-risk events may have significant impact on the environment.

Note 2: 10 CFR 835 may require medium risk events to be unacceptable.

The C-AD re-evaluates unmitigated risk considering the preventive and mitigating factors in place that would reduce either their consequence or frequency. This should move their location on the risk matrix based on assumed conditional probabilities of failure for the mitigating systems. At this point, the mitigated risk should be either low or extremely low. For low risk, the C-AD further determines if there are additional preventive- or mitigating-features that C-AD could credit to bring the risk to extremely low. The last step is to determine if it is necessary to designate any Credited Controls, commit to formal administrative controls, or to specify limits for operation. The C-AD designates a Credited Control when it is essential to protect workers and/or staff from significant hazards.

The purpose of Credited Controls is to highlight structures, systems, or components needed to ensure safety. C-AD incorporates Credited Controls into the Accelerator Safety Envelope (ASE), appropriate procedures, and/or quality-assurance documents.

The risk matrix in Table 4.2.1 supports binning the hazardous event by its risk, i.e., a combination of the consequence of the hazardous event and its likelihood of occurrence. The C-AD deemed some of these combinations acceptable, meaning that the qualitative hazard-evaluation adequately addressed the lower risk bins. The C-AD considered higher risk bins unacceptable, and the incidents therein require additional quantitative analysis to determine the true mitigated risk.

4.2.2. Risk Minimization Approach for Radiation Hazards

There is an insignificant risk of a serious radiation injury at BNL's accelerators, experiments and support facilities. However, for radiation exposure, it is customary to go beyond the scope of safety analysis to demonstrate that transient events, such as credible beam faults, or accidental radioactive material release do not exceed the goals or requirements of annual radiation-dose. The special status of radiation hazards is exemplified in the As Low As Reasonably Achievable (ALARA) requirement in BNL's Radiological Control Manual that exposure to radiation must be minimized and driven as far as practicable below the regulatory limits. The C-AD established some areas as controlled access areas (Controlled Area, Radiation Area, and High Radiation Area) to regulate the flow and behavior of workers therein such that workers receive the minimum radiation exposure, viz., the risk, coincident with operating and maintaining the facility to achieve its authorized research mission, which is the benefit. The C-AD expects that radiation levels in these established areas will not exceed certain specified maxima, depending on the type of zone; the designated area maxima is based on the residual radiation field, and the integrated effect of routine beam losses. The C-AD does not post radiological signs for accident conditions, rather, the C-AD posts for routine operational radiation levels. The C-A Operations Procedure Manual, complying with BNL's Radiation Control Manual, lists the different radiological areas including the required controls for minimizing exposure to external radiation. Significant contamination and internal uptake of radionuclides at the C-AD facilities is extremely unlikely, with the possible exception of the BLIP/RRPL facilities, accordingly, workers there are required to undergo annual whole body counts to check the adequacy of contamination controls. Further analyses of internal-exposure issues are unnecessary. The C-AD documented internal exposure issues in its Technical Basis for Bioassay.[1]

4.3. Hazard Identification and Qualitative Safety Analysis

The C-AD summarized in Appendix 1 the results of hazard identification and qualitative safety analyses.

The hazard identification process examined the C-AD facility's processes, operations, and maintenance that could be a source of danger with the potential to cause illness, injury or death, damage to operations or environmental damage. Conducting these analyses involved using facilities-design documentation, BNL's conventional- and radiological-safety requirements,

[1] Technical Basis for Bioassay Requirements, Collider-Accelerator Department, January 2001, Revised May 2008

facility walk-downs, C-A's Operating and Emergency Procedures, and discussions with engineering staff, experimenters, and safety professionals.

The C-AD completed additional qualitative risk-assessments on specific jobs and in specific work areas using a standard method for developing, using, and maintaining risk assessments meeting the requirements of OHSAS 18001. To finalize these assessments, the C-AD binned its work into 50 types of jobs, observed hazards during the jobs, and estimated risks for each job based on previous injuries. The C-AD updates Facility Risk Assessments (FRAs) and Job Risk Assessments (JRAs) every three years, doing one-third each year. Additionally, the C-AD updates risk assessments after any modifications to areas or jobs. As necessary, the C-AD updates an FRA or JRA in response to an injury, reportable occurrence, near miss, or a non-conformance associated with a job.

4.4. Conventional- and Environmental-Hazards

A review of all safety- and health-issues related to C-AD facilities recognizes the need for further safety analyses of 1) fire and explosions from flammable gasses in the RHIC's particle detectors, 2) radiation from beam and target radioactivity, 3) oxygen-deficiency hazards from large quantities of inert gases, and 4) electrical hazards associated with programmatic equipment. The safety analyses accounted for the preventive and mitigating facility design features. Appendix 1 details the initial hazard screening for further safety analyses.

Standard industrial activities encompass pressure and vacuum vessels, use of toxic-, hazardous-, and biological-materials, use of small quantities of flammable/inert/cryogenic gases/fluids, noise, hoisting/rigging, confined space entries, lasers, rotating equipment, heat, and magnetic fields. The C-AD controls these risks by complying with the consensus standards and codes, SBMS's Subject Areas, and the C-AD Operations Procedure Manual (OPM). When required, these hazards undergo review by the appropriate BNL- or C-AD-committee, or by the C-AD's ESSHQ Division specialists during work planning.

The DOE requires special focus on the hazards of beryllium, lead, and asbestos, even though they are standard industrial hazards. Inhaling beryllium dust or particles can cause chronic beryllium disease (CBD), and beryllium sensitization. The DOE established regulations to require a prevention program for chronic-beryllium-disease, the goal of which is to reduce the number of workers exposed to beryllium, minimize the levels of exposure to it, and establish medical surveillance requirements to ensure the early detection and treatment of disease. Certain work at the C-AD facilities involves beryllium; accordingly, PPE, spill, release, and cleanup plans for beryllium use and handling activities are mandatory.

Lead is a toxic substance that, handled improperly, can create adverse health effects. The inhalation or ingestion of lead dust or particles can cause permanent health effects in children and adults. The OSHA, HUD, and EPA established regulations to require a lead-exposure prevention program, the goal of which is to lower worker's level of exposure to lead, establish medical surveillance requirements to ensure the early detection and treatment of disease, and minimize releases to the environment. The C-AD has procedures detailing measures such as PPE and personal monitoring to comply with these regulations and to prevent injuries and illnesses from working with lead.

Asbestos may be present in many of BNL's buildings, primarily in pipe insulation, ceiling tiles, gaskets, thermal insulation, cement boards and pipes, flooring material, and roofing products. It also may exist in brake and clutch linings, and in some laboratory equipment, such as

insulation on gloves, ring stand clamps, and heating mantles, fire blankets, and older electrical-wiring insulation.

Government agencies, such as the Occupational Safety and Health Administration (OSHA) and the Environmental Protection Agency (EPA) closely regulate the sampling for, and removal of asbestos. Conducting any operation that disturbs or removes asbestos requires written exposure control procedures approved by BNL's asbestos subject-matter expert.

Only qualified C-AD and BNL staff engineers, operators, technicians and maintenance personnel perform electrical work. BNL's SBMS and C-AD procedures fully describe the electrical-safety requirements that assure electrical safety. These requirements mainly are based on NFPA 70E, Electrical Safety in the Workplace. The C-AD allows access by trained individuals only to the injectors, accelerators, transport lines, target areas, and the collider when it powers the magnets; there are no exposed conductors.

The static- or fringe-magnetic fields present in the magnets do not warrant special controls other than appropriate warning signs and training of personnel who have access to the areas in accord with the requirements of the BNL's SBMS, based on the ACGIH's TLV.

The C-AD maintains lists of chemicals used in its facilities, including the manufacturer's Material Safety Data Sheets (MSDS), in accord with BNL's Chemical Management System (CMS). Required reviews of aspects of the conventional safety of the C-AD facilities show that using these chemicals does not warrant special controls other than appropriate signs, procedures, use of personal protective equipment, and hazard-communication training.

The dominant hazardous liquid effluents are ^{3}H and ^{22}Na produced in the earth shielding that might contaminate the ground water or in cooling water released to the ground or the sanitary system. The dominant hazardous airborne effluents are short-lived radioactive gases ^{13}N, ^{15}O and $^{11}CO_2$ in the air removed from the accelerator's enclosures or emanating from target cooling water. To control the hazards of liquid effluents, when required, or at the discretion of management as a best management practice, the C-AD follows Suffolk County Article 12 Code in designing cooling-water systems and piping that contain tritium, sodium, and other radionuclides. Radioactive liquid effluents from the sanitary waste system diverts to a hold-up system at BNL, or to a hold up tank for such liquids in the C-AD facilities, to allow their sampling before disposal. The radioactive air emissions from C-AD facilities are low, except for short-lived radio-gases from the BLIP stack. The annual BNL Site Environmental Report and the annual NESHAPS Report detail the findings from environmental monitoring and on exposure pathways.

The C-AD releases small volumes of non-radioactive inert and hazardous gasses from the experimental detectors each running period. BNL's Environmental Protection Division reviews them to determine if permitting is required. These releases have no safety impact but involve regulatory-compliance issues.

4.5. Radiation Hazards

For over half a century, BNL's accelerators and experimental beam lines have provided protons and polarized protons for the high-energy physics program. For the past 20 years, the accelerators have delivered heavy ions to the nuclear physics- and NASA-programs. The C-AD provides protons to the Brookhaven Linac Isotope producer (BLIP) to produce radioactive atoms for medical uses and to test users' materials for radiation damage. The AGS operates with three beam modes. The high-flux unpolarized proton beam potentially could create the highest

instantaneous (or hourly) radiation fields outside the accelerator enclosures. Polarized proton- and heavy ion-beams generate less instantaneous radiation but typically dominate beam operations for the physics program. The C-AD bases their beam-fault calculations for the AGS's shielding and activation on fluxes associated with high-intensity unpolarized protons, using a proton intensity of $1x10^{14}$ protons/s at 30 GeV in the analysis, an intensity significantly above the facility's sustained capability but affording a conservative value for designing the shielding. The C-AD used similar conservative intensities for other portions of their accelerators and accelerator facilities. They assessed the radiation resulting from heavy ion collisions with matter by assuming that each nucleon in a heavy-ion nucleus is an independent high-energy particle. Recent shielding codes include improving the analysis by considering ion-induced radiation. However, for bulk shielding, the requirements to protection against high-intensity high-energy protons exceeds any shielding requirements for high-energy heavy ions or unpolarized protons.

The C-AD has an extensive research program with electron guns, superconducting RF cavities, and the Energy Recovery Linac (ERL). The ERL research and development facility provides experience with electron guns and accelerating cavities for future use at the Relativistic Heavy Ion Collider (RHIC) and other accelerator facilities. Its enclosure experiences radiation hazards both from x-rays emitted from the RF gun and the five-cell cavity, and Bremsstrahlung radiation and neutrons from losses of the 25 MeV electron-beams.

The C-AD constructed two blockhouses in Building 912 for developing and testing superconducting RF guns (SRF blockhouse) and cavities (VTF blockhouse), and considers the radiation sources for the two blockhouses as Radiation Generating Devices (RGDs).

The species and energy of the particle beams used at the C-AD facilities vary considerably. The hazard from exposure to the primary beam is present only when the machines are operating. The accelerated primary beam essentially is a mono-energetic current of one particle species whose passage through the accelerator equipment, experimental equipment, targets, or thin shielding generates secondary particles, with a wide range of energies, which in-turn create residual radioactivity when slowing down in shielding. As the primary beam's energy increases, the number and diversity of secondary particles existing in the radiation fields expands, and the potential to create residual activity in the accelerator components increases when the number of inelastic spallation reactions become significant[2]. Primary beam losses occur during machine instabilities, interaction with stripping foils, intrusive beam instrumentation, collimation, mistuned beam, and finally, when the beam strikes a beam dump. Typically, the hazards of neutrons dominate the design of the shielding for the hadron machines; above 10 GeV, muons can dominate the shielding requirement in the forward direction. For electron machines, Bremsstrahlung radiation is the most important consideration in the shielding design in the forward direction. All these potential sources of radiation cease as soon as C-AD removes the electrical energy from the source; thereafter, only residual activity inside the accelerator enclosure will pose an exposure risk.

The neutron dose to C-AD staff is less than 10% of their total annual dose. Accordingly, the recently revised neutron-radiation modifying factors required by 10 CFR 835 have only a small effect on the computed doses during routine beam-loss. Except for high-intensity unpolarized proton operations and maximal credible beam faults, the neutron dose is insignificant for routine operations. Experimenters and operating personnel who are near the shielding during high-intensity proton machine operations receive the higher neutron doses.

[2] Typically when hadronic particles exceed a few GeV of kinetic energy.

The primary ion beams, secondary pions, neutrons, and scattered particles induce radioactivity in the machine's components, targets, collimators, beam scrappers and dumps, shielding including soil, cooling water, and nearby equipment. The hadronic beam's interactions with these components produce a cascade of hadronic particles that cause spallation reactions in the materials, followed by the evaporation of nucleons, mostly neutrons, from the excited residual nuclei. Spallation generates the full spectrum of radionuclides with mass equal to the original target material's nuclei down to tritium. The radionuclides produced this way are proton rich; that is they are above the element stability line and quickly decay to stable elements; most radionuclides live only for minutes to days and the longest-lived nuclides are in general 5.3-year Co-60 and 12.3-year tritium. Only a small number of radionuclides are important to safety because of their production cross-section values and radioactive half-life values. Because high-energy particles penetrate deep into iron and concrete, the result is volumetric activation within solid materials. While this results in significant self-shielding, entry into activated areas still requires radiation surveys and radiation controls following the machine's shutdown for inspection, maintenance, or repair. The C-AD minimizes the residual radioactivity produced in cooling water by passing it through filters and deionizers, so reducing the content of most activation products but for tritium. With the exception of targets, collimators, beam dumps, and scrappers, machine injection and extraction components, specific activity is not high in concrete shielding or magnet iron. Due to the significantly long mean-free-path between interactions, the extent of the activation is widespread, dilute, and moderately lived and dispersed, unlike activated materials at reactor facilities. Therefore, the potential for significant contamination issues is low at C-AD's accelerators.

Several parameters of the accelerator beam determine the bulk characteristics of the facility's shielding. First, the type of accelerated particle species determines whether hadronic cascades (proton- and ion-accelerators) or electromagnetic cascades (electron accelerators) dictate the shielding. Second, the maximum particle-energy establishes the relative characteristics of the transverse-to-longitudinal shielding. For either hadron[3] or electron[4] accelerators, the forward shielding requirements predominate at high energies; therefore, it is important to establish the accelerator's maximum energy. Finally, the beam intensity or power influences the shielding design. At sufficiently high energy, particle decays generate muons, which can dominate the shielding requirements in the forward direction.

Muons arise from the decay of pions and kaons produced by the interaction of high-energy hadrons. Muons are leptons, and lose energy by ionizing atoms in the materials they traverse. For example, a 30 GeV muon has a range of 80 m in soil, 60 m in concrete, and 20 m in iron. The muon's energy spectrum varies up to the energy of the parent pions or kaons, and thus, they can dominate completely the forward shielding requirements. Muons are similar to electrons in every respect, except for their larger mass.

High-voltage devices, typical of accelerators and distributed throughout the accelerator's enclosure, introduce a possible risk of exposure to x-rays. They include RF cavities, klystrons, and buncher- or de-buncher-cavities. The C-AD protects personnel from the x-rays though a combination of shielding, interlocks, and procedures, depending on the potential x-ray levels.

---

[3] A. H. Sullivan, A Guide to Radiation and Radioactivity Levels Near High Energy Particle Accelerators, Nuclear Technology Publishing, 1992 (see Figure 2.2)

[4] NCRP Report No. 144, Radiation Protection for Particle Accelerator Facilities, National Council on Radiation Protection and Measurements, 2003 (see Fig.3.5)

The principal radiation hazards at C-AD facilities derive from the primary beam's flux and the machine's duty cycle. Listed in order of importance, these hazards include the following ones:

- Inadvertent exposure of workers to the primary beam
- Exposure to prompt secondary radiation created by primary beam losses during normal operation or episodes of abnormal losses, including areas near labyrinths and penetrations
- Exposure to residual radiation induced in the machine's components such as beam scrappers, beam dumps, collimators, extraction magnets, targets, and stripping foils
- Inadvertent release of activated cooling water to the environment
- Unintended release of radioactive contamination to groundwater by allowing rainwater to leach through uncapped activated soil-shields
- Exposure to activated air from primary- and secondary-beam
- Exposure to radioactive plumes from downward stack emissions
- Skyshine radiation, viz., low-energy neutrons that radiate back to earth after high-energy hadron interactions in the air above the accelerator

4.5.1. Source Terms and Calculated Radiation Fields

The C-AD designed the ionizing radiation shielding for routine- and maximum-operating beam conditions for the each accelerator and accelerator facility. In locations where C-AD transports all types of beams, unpolarized protons dominate the shield design for instantaneous and hourly dose-rates. The radiation-protection program uses defense-in-depth to lower the risk of exposure, including posting, access controls, radiation monitors, and procedures, along with the traditional defenses, such as time, distance and shielding. The shielding, together with the other controls, meets the requirements for hourly dose, yearly dose, and dose during an accidental beam-loss. The C-AD designed shielding to mitigate the greatest radiation hazards during operations, i.e., neutron- and muon-radiation from high-energy hadron accelerators, electron- and Bremsstrahlung-radiation from lepton accelerators, and x-rays from high-voltage devices, such as RF cavities.

Appendix 1 gives the baseline evaluation of radiation hazards associated with operating and constructing the accelerator and experimental facilities. Specifically, C-AD evaluated the hazards of the following sources of radiation:

- Exposure to an ion- or electron-primary beam including synchrotron radiation for electron machines
- Prompt radiation immediately outside the shielding of the primary ion- or electron-beam
- Exposure to x-rays from high voltages devices (e.g., RF cavities, klystrons)
- Exposure to residual activity
- Activated cooling water
- Potential contamination of groundwater from activated soil
- Air activation
- Skyshine

Typically, the C-AD computed the dose rates in a manner that overestimates the potential dose. Similarly, the radiation-source terms and the duration of beam operations were overvalued. The C-AD retained records of archival calculations in the archival SADs, in C-AD technical notes, in memoranda to the Radiation Safety Committee (RSC), and in the RSC Committee's

minutes. The dose estimates determine the requirements for shielding, soil capping, radiological posting, access controls, potential for activated water, and air-emission monitoring during the design phase of a project, or following a facility modification. The C-AD conducted beam fault studies after a construction or modification to ensure adequate designs; and maintains the records of the fault studies. Finally, Operators and Operations Coordinators monitor the following to assure that the accelerator and accelerator facilities operate within their approved safety basis:

- Check-off lists for each area are completed to verify the area has the correct shielding, and/or enclosure configuration before starting beam operations after a shutdown
- Periodic dose-rate surveys are conducted and documented by qualified Radiological Control Technicians (RCTs) of the BNL Radiological Control Division (RCD) during beam operations
- Groundwater samples are obtained at intervals defined by BNL's SBMS, and periodic soil and removable soil samples are taken at known locations of beam loss within the accelerator enclosures to assure that groundwater contamination is well below the limits
- Periodic confirmatory air samples are obtained to verify that anticipated activated air emissions remain well below trigger level of 10 mrem per year to the maximally exposed individual (MEI) at BNL's site boundary
- Continuous measurements are made of activated exhaust air for any exhausted enclosure that is anticipated to exceed the trigger level of 0.1 mrem per year to the maximally exposed individual (MEI) at the site boundary

The C-AD completed safety analyses of the potential radiation-hazards from operating the following C-AD accelerator and accelerator facilities:

- Brookhaven Linac Isotope Producer (BLIP)
- Linac
- Linac to AGS Line
- Electron Beam Ion Source (EBIS)
- Tandem Van De Graaffs (TVDG)
- Tandem to Booster Line (TtB)
- Booster
- Alternating Gradient Synchrotron (AGS)
- U-Line
- V-Line
- W-Line
- R-Line
- AGS to RHIC (AtR) Transfer Line
- Collider (RHIC)
- Collider Intersecting Regions
- NASA Space Radiation Laboratory (NSRL)
- Energy Recovery Linac (ERL)
- Accelerator R&D Blockhouses
- Brookhaven Linac Isotope Producer (BLIP)
- Radionuclide Research and Production Laboratory (RRPL)

4.5.2. Preventing Exposure to Primary Beam and x-rays from HV Devices

The RSC reviews the risk of radiation exposure in all C-AD areas. The potential exposure levels in primary-beam areas are extremely high; the RSC uses approved procedures to assess the required protection for each one. Locked and/or interlocked gates prevent access to a beam enclosure and remove the radiation source. The C-AD predominantly transports primary beam through an evacuated beam pipe that reduces the potential dose to an individual in a primary area with beam.[5] The spray of prompt secondary particles produced by the scrapping or loss of the primary beam into the beam pipe or other accelerator components, which depends upon the beam's energy, still may present an exposure potential to an individual. An automatic access controls system (ACS) prevents exposure of personnel to enclosures where the potential dose is greater than 50-rem in one hour.[6] The C-AD also uses automatic access-control systems to protect against lower-level radiation fields; however, the DOE, BNL and C-AD allow locks or other access controls for lower-level hazards if automatic systems are impracticable or unavailable. Table 4.5.2.a illustrates examples of the potential exposures inside enclosures due to the primary beam striking a thick object.

Table 4.5.2.a Transverse Dose Rate for Full Primary Beam Loss

Area	Beam Intensity	Beam Energy	Dose per Fault or Dose Rate at One Foot, rem/h unless otherwise indicated
Linac[7]	1.56×10^{15} p/s	0.200 GeV	9.4×10^{5}
Booster	10^{14} p/s	3.0 GeV	9.0×10^{5}
AGS	10^{14} p/s	30. GeV	8.6×10^{6}
RHIC[8]	5×10^{13} p/store	300 GeV	1.0×10^{5} rem per fault
ERL[9]	1.5 MW e	3.5 MeV	8.6×10^{7}
EBIS	200 nanoA	4 MeV d	6.0×10^{-1}
AtR[10]	4.4×10^{11} p/s	30 GeV p	3.8×10^{4}
U Line (upstream)	10^{14} p/s	30 GeV p	8.6×10^{6}
U Line (downstream)	1.1×10^{11} p/s	30 GeV p	9.5×10^{3}
NSRL	1.95×10^{14} p/h	3.0 GeV	8.7×10^{3}
TtB[11]	200 nanoA	18 MeV d	<50
Tandem[12]	4 microA	30 MeV d	1.7×10^{3}

[5] The C-AD uses evacuated beam pipes to maintain the quality of the transported beam and, as a secondary purpose, to reduce beam-air interactions.

[6] ACS refers to the relay or "hard-wired" access-control systems, while PASS denotes programmable systems (PLC or FPGA). However, national standards use the term ACS for both.

[7] D. Beavis, "Ring Me: Potential Radiation Levels from Beam Faults in the AGS Ring", AGS/EP&S Tech Note No. 138, Sept. 30, 1991. The estimates for the Booster and AGS are also given in the note.

[8] A.J. Stevens, "Radiation Field in the Vicinity of the Collider Center", AD/RHIC/RD-77, Oct. 1994

[9] Prototype Energy Recovery Linac, Building 912, Safety Assessment Document, June 30, 2008

[10] Based on 5×10^{13} per ring in 114 bunches inject protons injected every 4 seconds via one bunch.

[11] See RSC Minutes of Oct. 17, 2007

[12] Based on NCRP Report 51 and a carbon target. A Ta target would be a factor of 50 lower.

During routine operations, the normal radiation losses are two- to four-orders of magnitude below the levels in Table 4.5.2.a. C-AD computed the doses using maximum beam intensity, maximum beam energy, striking a thick target, and took no credit for the self-shielding provided by the struck object. With the exception of EBIS that has no enclosure other than a beam pipe, these fault doses illustrate the importance of ensuring that no personnel are inside the machine enclosures while the beam is operational.

The magnitude of potential doses inside the accelerator enclosures requires that the C-AD employ extremely reliable access-controls to prevent ingress when the beam is present. The C-AD's RSC requires that two interlocked devices prevent the radiation when the C-AD makes the enclosure accessible.[13] The ACS uses two "critical" devices to disable the beam. In some circumstances, the C-AD uses similar devices. When practicable, the RSC requires automatic monitoring of the status of the critical devices; if they do not complete their required safety function in an allotted time, then the access-control system will "reach back" to an upstream device to terminate the radiation. The reach-back device typically is a critical device for an upstream area. The RSC evaluates the reliability of critical devices and makes recommendations on changes when appropriate to accommodate the changing requirements of the programs. Table 4.5.2.b lists the C-AD accelerator enclosures with dual critical-devices.

[13] This requirement is when the radiation dose rate exceeds 50 rem in an hour. C-AD refers to these devices as critical devices.

Table 4.5.2.b Dual Critical Devices for C-AD Enclosures

Area Protected by Critical Devices	Critical Device
Linac Enclosure	LEBT Beam Stop (BS) 1 (35 keV)
	LEBT BS 2 (750 keV)
	Tank 1 RF as alternate for BS 2
Booster Enclosure	Linac to Booster BS 1 and BS 2
	DH2/3 bending magnet off as an alternate to BS 1
	TTB BS 1 and BS 2
	EBIS BS 1 and BS 2
	Beam shutter
NSRL Enclosure	D6 septum magnet off contactor 1
	D6 septum magnet off contactor 2
	Beam plug in
NSRL Target Room (only)	20 degree bending magnets off
	Beam plug in
AGS Enclosure	F6 extraction magnet off
	DH2/3 bending magnet off
	Beam shutter
U Line (upstream AtR)	U-line dipole magnets D1/2 off by contactor 1 U-line dipole magnets UD1/2 off by contactor 2
	H10 extraction system off
W Line (downstream AtR)	8 degree bending magnets off
	20 degree bending magnets off
RHIC Tunnel	Switching magnet off
	X,Y arc magnets off
	20 degree bend as an alternate to X,Y arc magnets
	Beam shutter 1 and 2
TTB Tunnel	BS 11BP10
	BS 11BP40
Tandem Vault	Dual low-energy BSs MP6
	Dual low-energy BSs MP7
ERL Enclosure	Klystron contactor KCD1
	Klystron contactor KCD2
	480V contactor 50KWCD1
	480V contactor 50KWCD2

Dual sensors monitor the locked entrance gates to the enclosures. The C-AD assures the interlock function with redundant systems of electromechanical relays, or with redundant PLC based systems. The ACS controls the allowed states of the critical devices; the probability of their unsafe failure allowing a radiation overexposure from primary ion- or electron-beam or to RF-produced x-rays is extremely low such that this hazard is not credible; hence, further analysis

was not undertaken.[14] In addition to preventing beam injection, the RHIC collider must have dual shutters to remove any residual stored beam should the ACS sense a gate opening, and the RHIC abort system, which is not a Credited Control, fails to remove the beam. The AGS and Booster rings are not storage rings, but the flexibility of the RF systems led the RSC to require one beam shutter in each ring as a precaution against small amounts of the residual circulating beam remaining during the breach of a gate.

The C-AD facilities have various high-voltage devices that potentially can generate copious amounts of x-rays. Table 4.5.2.c lists examples of these devices, and their x-ray dose rate.

Table 4.5.2.c Absorbed Dose Rate near x-ray Sources

Area	Device	Maximum Dose Rate in rad/h at one foot
Linac[15]	RF Cavities	1-5
Linac[16]	Laser Profile Monitor	1-4
RHIC[17]	RF cavities	200
ERL[18]	Five-cell cavity	$2x10^4$
ERL	Superconducting RF Gun	Not Calculated
VTF[19]	Test cavities	$3.7x10^5$
SRF[20]	Electron gun	300

Other C-AD areas have high-voltage induced x-ray hazards, such as the EBIS's ion-beam debunchers, and the IH Linac; the Booster and AGS beam accelerating cavities; and other short-term high-voltage device experiments usually performed in Building 912.[21] The C-AD's RSC reviews x-ray shielding and/or access control requirements for these devices.

4.5.3. Beam Faults and Chipmunks

The maximum credible unplanned loss is complete loss of the beam at any single point at the maximum energy for a short period. This is termed a "fault" condition throughout this report. In appropriate areas, radiation monitors, so-called "Chipmunks" by the C-AD, can detect fault levels essentially instantaneously, and if interlocked, the beam will shut down within a maximum of 9 seconds.[22] This delay time applies when a Chipmunk radiation monitor experiences a dose

[14] D. Beavis, Failures in the PLC Based Radiation Safety Systems, October 31, 2000; D. Beavis, Frequency of Interlock Testing, November 6, 2000; D. Beavis, Estimation of Time to Loss of Protection-The D-Downstream Gate, November 13, 2000

[15] C-AD based the dose rates on archival radiation surveys performed by the BNL's RadCon Division

[16] See ASSRC Minutes of Oct. 27, 2009

[17] S. Musolino, Measurements of Prompt Radiation from the PoP RF Cavity Test Stand in Building 1005 Highbay, August 8, 1995, and Measurements of Prompt Radiation from the Storage RF Cavity Test 4 o'clock Service Building, August 8, 1995

[18] Prototype Energy Recovery Linac, Building 912, Safety Assessment Document, June 30, 2008

[19] D. Beavis Memorandum to RSC, "Initial Radiation Calculations for the VTF Blockhouse", April 6, 2009

[20] RSC Minutes of March 17, 2009, "The SRF gun Blockhouse"

[21] D. Beavis and R. Karol, "E-Field Tests for EDM in the A3 Cave Area", March 19, 2010

[22] G. Bennett to D. Beavis, RSC Chair, "Chipmunk Response Time," BNL Memorandum, October 9, 1991

rate near the actual trip point. As the dose rate increases beyond this point, the delay time decreases.[23] Thus, the assumed 9-second delay time yields a conservatively high estimate for the fault doses. For areas where each fault may produce more than 20 mrem, the C-AD employs system of access controls, such as barriers and locked fences, and upgrades the area to one of several types of radiological areas for the purpose of radiation protection.

4.6. 200-MeV Linac Shielding Analysis

The 200-MeV Linac accelerates 750 keV proton beams from one of two sources and delivers the beam to three possible locations. Operators may change the source and delivery location on a pulse-by-pulse basis. The unpolarized H^- source produces the largest proton current with achieved intensities of 7.2×10^{14} protons per second. The polarized proton source can produce 5×10^{12} protons per second. Operators deliver high-intensity beam to BLIP for radionuclide production. The high intensity beam also can be delivered to the Booster via the Linac-to-Booster (LtB) transfer line, although there have been no high-intensity Booster operations for more than five years. Operators deliver low-intensity beams to the Booster from either the unpolarized H^- source, or the polarized proton source. For Linac studies and for polarization measurements these beams go to the beam stops in Linac's High Energy Beam Transport (HEBT) line.

The sources produce 35 keV protons, whose energy is too low to create the potential for exposure to either x-rays or neutrons at the primary beam stops or in the vacuum pipe's walls if beam is misaligned.

Operators accelerate the 35 keV protons in an RFQ to a kinetic energy of 750 keV that is too low to create x-rays or neutrons. There are 750 KeV beam stops on either side of the RFQ with water-cooling systems to absorb the source's entire current.

Physicists analyzed the Linac's radiation shielding for 1.56×10^{15} protons per second at 200 MeV to accommodate for future improvements of the sources. The ASE Safety Limit for protons is 1.1×10^{18} GeV-nucleons/h, or 1.56×10^{15} protons/s at 200-MeV. The present configuration of the ion source limits the actual Linac output to 40 to 41 mA per pulse with a ~500 µsec pulse width, and a ~6.7 Hz beam repetition rate, which is 7.2×10^{14} protons/s at 200-MeV.

The Linac has nine tanks that operators can use incrementally to increase the beam's energy. Linacs have a fixed structure for accelerating the beam and each tank can increase the beam's energy only if the previous tanks have accelerated it. The exit energy from tank 9 can be any one of the nine fixed tank energies.[24] The first tank accelerates the beam to 10.4 MeV, and the final tank to 200 MeV. The BLIP facility often shuts off several tanks to operate at energies lower than 200 MeV. Operators tune the beam so to minimize losses at low energies. The C-AD enclosed the Linac accelerator with interlocked areas, starting near the beginning of tank 1. The Linac ACS protects against any potential exposure to accelerated beam by dual interlocks and critical devices.

There is an x-ray hazard along the length of the copper Linac RF tanks, the size of which depends on the conditioning status of the RF structures inside the tanks. Sparking may occur due to field-emission electrons along the entire length of the cavity; they are cavity-surface electrons

---

[23] J. Geller to D. Beavis, RSC Chair, "Time to Chipmunk Interlock for Large Radiation Faults," March 2, 1999

[24] The nine energies, in MeV, are 10.4, 37.5 66.2, 92.6, 116.5, 139.0, 160.5, 181.0, and 200.3.

pulled into, and accelerated to several MeV by the cavity's strong RF field. When the accelerated electrons stop by hitting the walls of the cavity, they convert some of their kinetic energy into photons in the x-ray portion of the electromagnetic spectrum, i.e., x-rays that penetrate the cavity's walls. Near the tanks, C-AD measured exposure rates of 1 to 5 R/h during normal operations. A gate after tank 9 and the gate at tank 1 define the area of the RF / x-ray hazard. A single layer of interlocks prevents personnel from entering the RF area when the RF is operating. Linac operators sometimes need to be in the RF area with the RF operating to diagnose a problem. The C-AD controls these accesses under a procedure with trained personnel wearing alarming dosimeters.

Experimenters installed a Laser Profile Monitor (LPM) after tank 9 outside the RF area. This device potentially can generate x-rays; hence, the C-AD installed a single layer of interlocks to prevent access with the unit energized. If operators do not secure the area, the ACS holds the LPM high-voltage power supply off.

The earth fill over the Linac's 200-MeV proton transfer line to the Booster, the LtB, is 5.4 m, with a transverse rise over run of 1 to 3 for the berm. Thus, the shield thickness at ground level is 16.2 m. The Linac enclosure itself provides an additional 0.61 m of concrete thickness overhead and on the sides at the 200-MeV end. At the low-energy end, 10 MeV, the thickness of the overlying earth is 3 m, and the concrete wall and roof of the Linac enclosure is 0.52 m. The thicknesses of the earth shield and concrete enclosure increase as proton energy rises along the length of the Linac. At the end of the Linac tunnel, the 200-MeV proton beam splits and can provide a maximum allowable flux of $1x10^{14}$ protons/s to the Booster or the AGS with the remaining flux being transported to the BLIP.

The losses from the Linac beam are small, in fact sufficiently low that they are difficult to measure. The one exception is the beam lost in tank 1 wherein about 28% of the beam is lost, with most loss occurring at or just above 750 keV. The energy of this beam loss is too low to create activation products in the Linac's components or to challenge the shielding. The greatest high-energy losses localize at the first pulsed dipole that deflects the beam to the BLIP. For the radiation-protection analysis, the C-AD assumes a routine loss of 1%; for fault conditions, C-AD assumes complete loss of the beam. In most locations, a complete loss of the beam would damage the vacuum pipe and vacuum windows due to the high energy-deposition. Hence, a Fast Beam Interrupt (FBI) system quickly terminates large beam losses. The FBI monitors the status of radiation monitors, vacuum valves, and beam stops, and terminates the beam if any device's status is above threshold or incorrectly positioned. Although the FBI system is not part of the ACS, it is an important contributor to the Linac's ALARA effort.

The penetrations in the Linac include the tank 1 gate or tunnel entrance, many 40 cm transmission line holes, many 60 cm vacuum lines, many 60 cm cable trays, many 15 cm cable sleeves, and two bricked-up 1.8 m x 2.4 m access ports for equipment. The transmission line, cable trays, cable sleeves and vacuum penetrations do not give direct line-of-sight to the RF tanks, which contain the beam, so reducing the potential fault dose-rates outside the Linac to acceptable levels. The C-AD posts the walkways in Building 930 along the side of the Linac to control personnel access to areas that potentially have radiation faults.

The penetrations in the HEBT include a plug door, many 15-cm cable sleeves, two 60 cm cable trays, one 30 cm cable opening, the LtB-Booster penetration, the TtB–Booster penetration, the AGS-HEBT door and labyrinth, a 60 cm x 120 cm airshaft, and two 7-cm cable penetrations. The cable penetrations and the airshaft do not give direct line-of-sight to the beam line.

Radiation that extends several thousand meters from an accelerator shield or the top of an accelerator building is termed the skyshine, when there is no direct line-of-sight. Predominantly, skyshine is from escaping high-energy neutrons (>20 MeV) or high-energy photons that exit through thin parts of the shield or the roof. These high-energy particles interact with atoms in the air column up to hundreds of meters above the accelerator, producing lower energy neutrons and photons (typically less than 1 MeV) that scatter downward to locations where there is no direct line-of-sight. Ongoing monitoring shows that skyshine is a minor contribution to the annual dose to the public and workers. Annual environmental radiation measurements for offsite areas reveal that it is not measurable above natural background radiation levels. BNL records the measured skyshine levels in the BNL Site Environmental Report produced by the BNL Environmental Protection Division.

Skyshine from the Linac beam is not a significant contributor to external dose due to the relatively low energy of the Linac beam and the shield's thickness. Table 4.6.1 summarizes calculated dose rates and fault study dose rates for the Linac area for 200-MeV protons. C-AD assessed the former from simple geometric shapes and for uniform line losses or single-point losses. The RCD measured the dose rates during intentional beam-loss studies (fault studies) using survey equipment that assumes values for the ratio of neutrons-to-photons in instruments that measure a mixed radiation field; the RCD assumed weighting factors for neutron doses. The C-AD undertakes fault studies with low-intensity beams, and extrapolates the measured results to correspond to full intensity. Additionally, steering a beam to a specific loss location is imprecise if there is no fixed beam-stop at that location. Given these constraints, these methods provide comparable results.

Table 4.6.1 Summary of Radiation Levels for Linac

Shield Type or Loss Point (2 m air assumed in addition to the shielding)	Area of Interest	Routine Equivalent Dose Rate (1% loss rate or 4.7×10^{10} p/s-m) mrem/h	Fault Equivalent Dose[25] per Linac Pulse[26] (7.2×10^{14} p/s; ~6.7 Hz) mrem/pulse (mrem/h)
Calculation:			
0.6 m concrete, 5.4 m earth	Linac Tunnel Top	1.1×10^{-5}	2.3×10^{-7} (0.007)
0.6 m concrete, 3 m earth	HEBT Top	5.4×10^{-2}	9.3×10^{-4} (26)
0.6 m concrete, 6 m earth	HEBT Side	1.4×10^{-6}	2.8×10^{-8} (0.001)
1.2 m concrete, 3.3 m earth	Linac Equipment Bay	1.2×10^{-3}	2.3×10^{-5} (0.7)
Fault Studies[27]			
Outside on Berm:			
Beam at HEBT Stops	HEBT Top	-	1.5×10^{-3} (39)
Beam at HEBT Stops	Blip Pump House Gate	-	3×10^{-3} (79)
Beam at HEBT Stops	In BLIP Pump House	-	5.6×10^{-2} (1400)
Beam at HEBT Stops	AGS / HEBT Gate	-	2.7×10^{-1} (6800)
Inside Enclosures:			
Beam Near TtB Penetration	HTB Enclosure[28]	-	1.4×10^{-2} (340)
Beam Near LtB Penetration	Booster Enclosure	-	2.9×10^{-3} (72)
Beam Near HTB Penetration	Booster Enclosure	-	7.9×10^{-3} (200)

Loss of protons with energies above 50 MeV in the regions of the Linac, LtB, and regions produces neutrons that may reach nearby facilities. The earth shield in the Linac area rises proportionately with proton energy, up to 5.4 m when the protons reach 200 MeV. Following the

[25] In appropriate areas, fault levels are detectable instantaneously by radiation monitors, and, if interlocked, the beam will shut down in less than 9 seconds

[26] These dose rates correspond to the presently achieved operating limit but can be scaled to the limit of the ASE beam by multiplying them by a factor of 2.4

[27] D. Beavis, Summary of Linac Fault Studies, HTB Safety Analysis Report, Appendix 7.7, 1991

[28] This is a small-area source, less than 1000 cm^2

Linac-accelerating-cavities is the LtB line located in the first 15 m of the HEBT. At this point, operators may transport Linac beam into the Booster. Shielding over the HEBT transport line is 3 m earth and 0.6 m concrete.

There are two mechanisms of beam loss in the Linac, LtB, and HEBT: 1) Loss of longitudinal stability; and, 2) failure of the magnet system. These failures may cause total beam losses that operators normally detect and correct after several lost pulses. Transient phenomena may give rise to a continuous low-level loss of beam. While a 0.1% uniformly distributed loss is the ideal condition for the Linac, significantly greater ones, assumed at 1%, are acceptable based on the thickness of the HEBT's shielding, and the proximity of other facilities around the Linac.

The limiting continuous loss in HEBT is about 2%. For this, the C-AD assumes a limit of 25 mrem per year to personnel in the BLIP Facility, which is closest to the HEBT line, and which BLIP operators occupy about 1000 hours per year. In the past, the C-AD used HEBT line directly to inject protons from Linac to the AGS. Because the Linac currently injects into the Booster, the C-AD now uses the HEBT line for test beams of polarized protons a fraction of the time when the Linac operates. Assuming a distributed loss over HEBT line, a 36 m line source, a flux of $1x10^{14}$ protons/s to Booster or AGS, a lateral distance between BLIP and HEBT of 15 m, and loss distributed over 1000 hours of operation, then the line-source equation indicates a maximum allowable loss rate of $5.5x10^{10}$ p/s-m during this time. This value is equivalent to a 2% beam loss continuously during the proton-running period. The C-AD made a similar analysis for continuous loss in the LtB.

The shielding analyses do not account for the activation of cooling water. Within the BLIP Pump House are cooling lines containing water activated by primary-beam losses in the HEBT beam stop. The dose rate from very short-lived dissolved radioactive gases in the water, which engenders a photon flux in the Pump House, adds to the dose equivalent from neutrons arising from primary-beam losses.

The shielding analyses for high-intensity protons encompass all Linac operating conditions. For example, the polarized proton-beam originates as a negatively ionized vertically polarized hydrogen-beam from a polarized ion source. These H^- ions inject into the Linac RFQ. The beam moves through the Low Energy Beam Transport line (LEBT) into the Linac where it accelerates to 200 MeV. The beam accelerates from the RFQ with a maximum intensity of a few TP per second reaching 200 MeV; this is an order-of-magnitude less than high-intensity unpolarized protons.

4.7. Electron Beam Ion Source (EBIS) Shielding Analysis

The EBIS Pre-Injector facility located in the Linac Building 930 has potential radiation hazards for personnel entering the building. There is no likelihood for affecting other BNL personnel, off-site individuals, or the environment. The primary radiation-hazard from the EBIS is low energy x-rays from high voltage structures used to accelerate, shape and modify ion-beam bunches. One type of EBIS ion beam, deuterons, may produce low levels of neutrons.

Radiological-area classifications at the EBIS are in accordance with requirements in the BNL's Radiological Control Manual. The C-AD uses the results of radiation surveys to maintain exposure "As Low As Reasonably Achievable" (ALARA). The C-AD's Radiological Control Technicians (RCTs) routinely survey the 200-MeV Linac building near the EBIS Pre-Injector. Generally, radiation levels are low, and so the RCTs post most areas as Controlled Areas. Because most operations with the EBIS Pre-Injector involve ions with masses greater than

deuterons, RCTs presently have posted “Controlled Area - TLD Required” in the EBIS Pre-Injector Area. They will re-evaluate if the C-AD accelerates deuterons at the EBIS.

Operators accelerate all beams of all ions at EBIS to 2 MeV per u to match the magnetic fields of the Booster injection system. Although there is prompt radiation present in the EBIS Pre-Injector building due to some ion losses, it is less than 5 mrem/h along the EBIS Pre-Injector surfaces, even if the ion beam is lost on the walls of structures. The RCTs found one exception at some penetrations near the EBIS IH Linac where small locations are near 5 mrem/h. While a 2 MeV per nucleon deuteron beam is yet to be accelerated, the C-AD has calculated its beam loss would generate levels of neutron radiation above 5 mrem/h in occupied areas.

Typically, photons and electrons that may emerge from heavy-ion beam faults with ions less than 7.5 MeV per u are unlikely to induce radioactivity in any target except beryllium (1.66 MeV per u), deuterium, or tritium (a few hundred keV per u). The C-AD does not use any of them in the components or walls of the EBIS Pre-Injector; thus, induced radioactivity from the heavy-ion beam is unlikely.

Neutrons from heavy-ion beam faults are possible; however, at the ion currents planned, neutrons will not be a measurable radiological issue. At 2 MeV per u, ions more massive than copper are unlikely to penetrate the coulomb barrier of target atoms to create evaporation- and fusion-neutrons since the repulsive Coulomb force increases dramatically with the product of the Z projectile and Z target. However, some “tunneling” through the coulomb barrier may occur in a collision, resulting in the release of an evaporation neutron but this reaction is infrequent. Low-Z heavy ions involved in a beam fault are better able to generate neutrons in collisions with other atoms. The most significant of these low-Z ions is deuterium that can release neutrons in exothermic fusion reactions with target atoms, in addition to evaporation neutrons.

Table 4.7 shows the dose-rate measurements from an unshielded source of 2 MeV per u deuteron beam after hitting a thick target of different materials. The beam currents used in the measurements are from the TVDG and are 20 times less than the maximum beam current for deuterons from the EBIS Pre-injector. Operators used TVDG Target Room 2 and the 40-degree line for this study, attaching the target material to a stainless-steel Marmon flange as a beam stop. They focused the size of the deuteron beam to 10 mm diameter.

Table 4.7 TVDG Measurements of Dose Rate from Deuteron Losses

Target Material	Aluminum	Stainless Steel	Copper	Tantalum
Deuteron Energy (MeV per u)	2	2	2	2
Current (nA)	10	10	10	10
C-AD Chipmunk Result, mrem/h 0 degrees at 1 ft	62	5	2.2	0.25
C-AD Chipmunk Result, mrem/h 90 degrees at 1 ft	37	3	1.5	0.2

The C-AD adjusted the Chipmunk’s response to a mixed neutron/gamma radiation field for a ratio of neutron absorbed-dose to gamma absorbed-dose of 0.16, and a neutron-radiation weighting-factor (formerly called Quality Factor) of 5.63, which is typical at AGS. The mixed-

field ratio depends on materials through which the radiations pass before reaching an accessible area. At the AGS, thick concrete walls, several meters, influence the neutron-to-gamma absorbed dose ratio in accessible areas. At the EBIS, and in the TVDG study, there are no concrete walls between a location of beam loss and an accessible area. The C-AD based their radiation-weighting factors on neutron energy, and set the response of their Chipmunk instrument for a spectrum of neutron energies for neutrons with energy above 5 MeV.

Based on TLD studies made during the TVDG deuteron measurements, the ratio of neutron absorbed-dose to gamma absorbed-dose was 0.27 for an unshielded aluminum target, not 0.16 as previously determined at AGS. The C-AD assumes a neutron-radiation weighting-factor of 20 at TVDG, which is the maximum assigned for 1- to 2-MeV neutrons. Thus, the measured dose rates in Table 4.7 must be adjusted upward by a factor of six, (0.27x20) / (0.16x5.63), because they were measured with a C-AD Chipmunk instrument set to respond correctly to an AGS- or RHIC-neutron/gamma radiation environment, not a TVDG one.

The IH Linac is the location of concern at the EBIS where the deuterons gain enough energy to penetrate the coulomb barrier of target atoms, causing nuclear reactions that release neutrons. If there were no beam losses, then neutrons would not be a concern; however, beam losses are inevitable, and at these beam currents for deuteron ions, even small losses may produce measurable radiation fields near the EBIS. From the maximum deuteron beam current out of the EBIS, 200 nA, and the measurements made using a 10 nA TVDG deuteron beam, the anticipated maximum equivalent dose rate is 7500 mrem/h. However, the C-AD did not install aluminum or other low-Z materials in the EBIS, nor do they plan to do so in future. The vacuum beam-pipe at the EBIS is stainless steel. Thus, the C-AD expects the maximum dose rate from deuteron losses to be under 600 mrem/h.

The C-AD's RCTs will undertake radiation surveys during initial EBIS operations with deuteron beam to determine actual radiation levels due to routine beam losses. Additionally, the C-AD will place interlocking Chipmunk radiation monitors along the beam line to protect personnel should there be a fault in the deuteron beam.

Without the beam, the EBIS IH-Linac can generate radiation due to the creation and loss of field emission electrons in the RF cavity; the C-AD controls the x-ray hazard according to SBMS's requirements. The EBIS IH-Linac cavity has gap-voltage amplitudes close to 600 kV. Measured x-ray radiation levels for the 1 Hz, 200-microsecond operation of a similar cavity at CERN showed 20 mrem/h at 1 foot from the X-rays.[29] The CERN cavity had 548 kW RF input power. The EBIS IH-Linac cavity has about 600 kW RF input power.

Assuming the planned 5 Hz operation with a 40 microsecond flat top, then similar x-ray levels would be attained in the EBIS IH-Linac if the cavity walls were the same thickness; however, the C-AD designed the EBIS IH-Linac cavity with thicker walls.

From the measurements using the CERN IH-Linac cavity, the EBIS deduced that 7 mm lead shielding would reduce the x-ray level by one order-of-magnitude at the design voltage levels of the EBIS IH Linac. The thickness of the walls of the CERN IH Linac cavity is 9-mm steel upper half-shell, and 6-mm copper lower half-shell. The RSC reviewed the initial design of the EBIS,[30] and encouraged the project to reconsider using external shields; hence, they increased the thickness of the EBIS-IH cavity's walls to 5-cm steel, yielding a reduction factor of 25 to 50 compared to the CERN unit. Thus, C-AD expects x-ray levels to be 0.5 to 1 mrem/h

[29] IH Cavity Measurements by U. Ratzinger
[30] Minutes of RSC Meeting, April 12, 2006

at 1 foot from the EBIS IH-Linac cavity. The results from the C-AD's RCTs surveys[31] show that the x-ray levels are within expectations. The largest integrated dose of photons on a three-month TLD was 25 mrem. RCTs did not detect neutron radiation from the EBIS ion beams used to date, including Si and Au.

The construction of EBIS required penetrations into the Booster's shield. The C-AD conducted fault studies to confirm the design. They did not detect radiation outside the EBIS penetration into Booster, which is inside Building 930.[32] The C-AD studied a fault in the Booster and found 0.2-mrem/h outside the EBIS-to-Booster penetration in Building 930. For the three penetrations that carry cables from the EBIS into the Booster's enclosure, fault studies demonstrated that the Booster shielding near penetrations adequately protected the EBIS area in Building 930 from beam faults in the Booster enclosure.

Thereafter, the RSC recommended that the EBIS area in Building 930 downstream of the IH Linac be posted "Controlled Area – TLD Required".

The maximum credible incident for the EBIS Pre-Injector facility is exposure to neutrons from deuteron-beam losses. Exposure would occur upon the simultaneous failure of multiple Chipmunk radiation-detector interlocks and beam focusing or beam steering components. The coincident combination of those failure events is possible, but not likely. Human error when tuning the beam is more credible. The estimated exposure level could be as high as 600 mrem/h. Even if interlocks fail, the local Chipmunk alarms annunciate and only a few seconds would pass before personnel recognize an alarm and leave the area, terminating all exposure.

EBIS cooling water does not present an ionizing-radiation hazard because the beam's energy is too low to produce activation in the closed-loop cooling-water systems. As with all C-AD's water systems, periodic sampling confirms low radioactivity levels.

Estimates show no activation of soil surrounding the transfer line from the EBIS to the Booster by neutron flux from deuteron-beam losses. The activation levels in soil are a function of the neutron flux, neutron energy, the elemental abundances in the soil, their spallation- or neutron-absorption-cross sections, the attenuation of the neutrons with depth into the soil layer, and the duration of irradiation. Based on these factors, activation at any depth into soil is negligible.

Furthermore, from the beam energies involved, air activation and airborne radioactivity emissions from the facility are extremely unlikely.

Similarly, considering the beam energies involved, equipment activation is not likely. Thus, handling the beam line's components is not work with radioactive materials. Since deuteron beams may produce neutrons, the RCTs will periodically monitor beam-line components to confirm the adequacy of the radioactive-material-control program.

As a source for uranium- and depleted-uranium beams, the C-AD uses uranium at the EBIS in small quantities, tens of grams, in the form of solid metal foil inside a stainless-steel metal cup, enclosed in an evacuated glass tube. A commercial vendor builds these sources; the C-AD installs them, and evacuates the tubes to low vacuum. Uranium and depleted-uranium share the same chemical characteristics. However, they differ, with depleted uranium being 40% less radioactive than natural uranium. Because of their radioactivity, uranium and its decay products, the C-AD controls, stores safely, and discards the sources according to requirements.

The decay chain of uranium and depleted uranium consists of four primary radioactive members: uranium-238; thorium-234; protactinium-234m; and uranium-234. This chain releases

[31] P. Bergh Memorandum to D. Beavis, May 18, 2011
[32] Minutes of Radiation Safety Committee of March 20, 2007

three different types of radiation: low-energy gamma and x-rays; two alpha particles each having about 4 MeV of energy; and, two beta particles with energies ranging from 0.1 MeV to 2.3 MeV.

The following safety analysis considers the possibility of a uranium-foil fire. No other mode of dispersal warrants consideration.

From reviewing inhalation exposures at NRC-licensed and DOE-owned facilities, experience with accidental intakes demonstrated that workers closest to the point of release receive the highest internal-radiation exposure.[33,34,35,36]

In accidents involving the release of radioactive materials, experience showed that the magnitude of the maximum inhalation intake is about one-millionth, 10^{-6}, of the amount of unsealed material being processed.[37,38] Health physicists traditionally use this empirical analysis for processes that confine radioactive material within an enclosure, such as a glove box[39], hood, ion-exchange column[40], or pelletizer within a glove box.[41]

In this case, the C-AD assumes a fire is sustainable and that the uranium source burns completely. Importantly, the fraction 10^{-6} applies to inhalation intakes only, that is the likely mode of intake for trained employees.[42]

If 100 g U becomes airborne in smoke, then the empirical analysis indicates a maximum intake by an individual of 0.1 mg by inhalation.

The toxicological hazard from depleted uranium is greater than the radiological hazard. Maguire[43] lists the following intakes and possible effects: 8.6 mg causing transient renal injury; 45 mg causing permanent damage; and 240 mg causing 50% lethality. Thus, the maximum 0.1 mg intake is unlikely to cause any injury or impairment. The committed effective dose equivalent from inhaling 0.1 mg of U (uranium dioxide, Class Y) is 6 mrem.

---

[33] A. Brodsky, J. Schubert, S. Yaniv, K. Lamson, N. Wald, R. Wechsler and R. Caldwell, "Deposition and Retention of 192Ir in the Lung After an Inhalation Incident," Abstracts of the Health Physics Annual Meeting, June 18-22, 1967, Pergamon Press, 1967

[34] W. D. Norwood, Health Protection of Radiation Workers, Charles C. Thomas, Springfield, IL, 1975

[35] National Council on Radiation Protection and Measurements, Management of Persons Accidentally Contaminated with Radionuclides, NCRP Report No.65, NCRP Publications, P. O. Box 30175, Washington, DC 20014, 1980

[36] A. P. Hull, "Preliminary Dose Assessment of the Chernobyl Accident, Parts I-III," The Health Physics Newsletter, Vol. XIV No.12 and Vol. XV No.1 and No.2, Health Physics Society, 1340 Old Chain Bridge Road, Suite 300, McLean, VA 22101, 1986-1987

[37] A. Brodsky, "Determining Industrial Hygiene Requirements for Installations Using Radioactive Materials," American Industrial Hygiene Association Journal 26, pp.294-310, May-June 1965 and Health Physics 38, pp.1155-1171, June 1980

[38] A. Brodsky, "Resuspension Factors and Probabilities of Intake of Radioactive Materials in Process (or "Is 10^{-6} a Magic Number in Health Physics?")", Health Physics 39, pp.992-1000, 1980

[39] A. Brodsky, N. Wald, R. E. Lee, J. Horm and R. Caldwell, "Americium Contamination Aspects of a Drybox Incident Involving Hand Amputation" in Health Physics Operational Monitoring, Volume 3, Edited by C. A. Willis and J. S. Handloser, Gorden and Breach, NY, pp.1581-1600, 1972

[40] R. C. Thompson, Editor, "1976 Hanford Americium Exposure Incident," Special Issue, Health Physics 45, October, 1983

[41] A. Brodsky, N. Wald, I. S. Horm and B. J. Varzaly, "The Removal of 241Am from Humans by DTPA," University of Pittsburgh Department of Radiation Health Progress Report, submitted to Department of Health, Education, and Welfare, Research Grant 2ROI EC 00122-03, 22 March 1971, Appendix C

[42] A. Brodsky, "Resuspension Factors and Probabilities of Intake of Radioactive Materials in Process (or "Is 10^{-6} a Magic Number in Health Physics?")", Health Physics 39, pp.992-1000, 1980

[43] S. A. McGuire, "A Regulatory Analysis on Emergency Preparedness For Fuel Cycle And Other Radioactive Material Licensees," NUREG 1140, U. S. Nuclear Regulatory Commission, Washington, D.C. 20555, 1985

4.8. TVDG and TtB Line Shielding Analysis

The TVDG facility has a complex, varied capability for producing radiation depending on the type of ion accelerated. The energies of TVDG's accelerated ions are proportional to the charge state achieved by the ions when they undergo stripping within the accelerator tank. Because lighter ions strip to charge states comparable to their atomic numbers, they achieve a relatively high energy per u, and so are able to produce appreciable numbers of fast neutrons and the associated gamma rays when they strike a target. Heavier ions cannot strip to charge states comparable to their atomic number; therefore, they only attain a relatively low energy per u. Such particles do not produce nuclear reactions when striking a target, and thus do not generate an appreciable radiation field. Because of the facility's diverse capability for producing radiation, a very diverse access-controls system is in place; studies shown that the controls are adequate.[44]

C-AD designed the TtB shield and the TtB beam-current-monitoring device to mitigate the greatest radiation hazards that exist when transferring low-mass ions from the TVDG to Booster. The shield alone is more than adequate for protecting against high-mass heavy-ion losses because the intensity of the heavy-ion beam and/or individual nucleon energies are comparatively much less.

After examining the experimental needs at the RHIC, it was determined that when used at RHIC the annual, total number of deuterons should be about $7x10^{17}$. This accounts for normal beam losses and deuteron beam tuning in the TVDG, TtB, Booster, AGS, and AtR.

The C-AD observed a 10% beam loss when the TtB line delivers beam to downstream users. TVDG did not identify specific points of chronic loss, and the distribution of these losses along the TtB is unknown. In tuning the TtB line itself, beam loss is inherent in the process because operators insert wire chambers and Faraday cups at various places along the line. Adding these losses suggests a total loss at a single point of about $2x10^{16}$ deuterons per year. The C-AD estimates the maximum incremental loss at a single point to be about $4.5x10^{13}$ deuterons per hour.

The C-AD planned a normal running current in the TVDG accelerator room of 67 nA of deuteron beam at 12 MeV, with a normal terminal voltage of 6 MV. For a full-energy beam fault, TVDG's personnel estimated that radiation levels from deuterons would be about 50 rem/h at one foot at 0° from a 30-MeV deuteron beam. For a full-intensity beam fault, the radiation level could be a few hundred rem/h at 1 foot at 0° if the current is intentionally tuned to the maximum 10 μA. Thus, the RSC required dual redundant interlocks in the TVDG accelerator room during deuteron operations. However, two events are needed to trigger these fault conditions; an intensity or voltage fault, and stopping the beam at a single point. Table 4.8 shows the estimates of radiation levels from different loss conditions for deuteron beams.

[44] J. Benjamin, C. Carlson, J. Throwe and F. Zafonte, Building 901A Shielding Effectiveness Studies, 7/92 and 4/94, Tandem Van de Graaff Facility, August 1994, Appendix XI of the TVDG SAD, June 1995

Table 4.8 Calculated Radiation Levels in the TVDG Accelerator Room and the TtB

Loss Description	Deuteron Current	Terminal Voltage	Instantaneous Dose Equivalent at 1 foot at 0°, rem/h
TVDG Normal Beam, Point Loss (single fault)	67 nA	6 MV	1.5
TVDG Full Energy Beam, Point Loss (double fault*)	67 nA	15 MV	50
TVDG Full Current Beam, Point Loss (double fault*)	10,000 nA	6 MV	230
TtB Normal Beam, Anticipated Beam Loss (routine loss)	6.7 nA or 10% in transit to RHIC ($4.5x10^{13}$ deuterons for one hour at a point)	6 MV 6 MV	0.15 0.04
TtB Normal Beam, Point Loss (single fault)	67 nA	6 MV	1.5
TtB Full Current Beam, Point Loss (double fault)	200 nA	6 MV	4.5

* Double fault - intensity or voltage fault coupled with stopping the beam at a single point.

The RSC approved the parameter limits for the TtB for a d-Au run for RHIC at 18 MeV deuterons[45], and required a 200 nA interlock and an alarm at 80 nA, after determining that these controls were adequate to keep dose rates well within the bounds defined by the double-fault condition in Table 4.8. The parameters allowed for the FY08 deuteron run were 20 MeV deuterons, 200 nA interlock level, and a 120 nA alarm level.[46] The C-AD lowered the beam current's limit in the ASE for TVDG to 4 microA; the previous limit of 10 microA cannot be reached.

Skyshine dose from the TVDG and TtB line is insignificant due to the particles' very low energies.

4.9. Booster Shielding Analysis

Among the three operating modes of the Booster, which are the high-intensity unpolarized proton beam, the polarized proton beam, and heavy-ion beams, the first one represents the greatest ionizing radiation hazard. Except for the shielding over the first dipole following the stripper for heavy ions, the C-AD based their calculations for shielding and activation on the fluxes associated with unpolarized protons. Table 4.9.a lists the Booster beam's fluxes and assumed beam losses.

[45] K. Yip, Increased Neutron Dose Due to Increased Deuteron Energy in the TTB Line, December 15, 2002
[46] RSC Minutes of Oct. 17, 2007

Table 4.9.a Summary of Booster Ion Beam Flux and Ion Beam Loss

Parameter	Unpolarized p A = 1	Polarized p A = 1	Sulfur A = 32	Gold A = 197
Beam Flux (s^{-1})	$1x10^{14}$	$1.5x10^{12}$	$1.5x10^{10}$	$3.2x10^{9}$
Injection Loss (s^{-1})	$3x10^{13}$	$3x10^{11}$	$3x10^{8}$	$6x10^{7}$
Injection Energy (MeV/nucleon)	200	200	4.688	1.066
Acceleration Losses (s^{-1})	$6x10^{12}$	$1.5x10^{10}$	$1.5x10^{8}$	$3.2x10^{7}$
Extraction Losses (s^{-1})	$2x10^{13}$	$1.5x10^{10}$	$1.5x10^{8}$	$3.2x10^{7}$
Stripper Losses	NA	NA	$1.5x10^{9}$	$1.6x10^{9}$
Extraction Energy (GeV/nucleon)	1.5 to 2.2	1.5 to 2.2	0.967	0.35
Maximum Credible Loss at Extraction Energy	$1x10^{14}$	$1.5x10^{12}$	$1.5x10^{10}$	$3.2x10^{9}$

For a beam loss, C-AD assumes 50% of it occurs at a single point, such as the dump/catcher while the remainder distributes uniformly around the Booster Ring. For extraction loss, 80% of it is on the septum and 20% is on the first dipole downstream. The maximum credible unplanned loss is the complete loss of the beam at any single point at maximum energy for a short period, less than a few seconds due to interlocks and alarms. Generally, the only distinction between protons and heavy ions concerns the total mass stopping power from direct exposure to primary beam particles. The C-AD prevents direct exposure to beams via an ACS for accessing the Booster enclosure. For shielding calculations, the C-AD treats heavy ions as an independent assembly of nucleons with a beam flux equal to the particle flux multiplied by the atomic mass number. All radiological controls at the Booster meet the C-AD and BNL requirements for posting, monitoring, and interlocking radiological areas.

Gollon,[47] Casey[48] and Lessard[49] analyzed the shielding of the Booster-tunnel's enclosure and the interfaces to the 200 MeV Linac and the AGS. The C-AD provided sufficient shielding to ensure that radiation levels for normal operating conditions meet the criteria of BNL and the DOE. Their analysis of fault conditions ensures that unacceptable radiation levels are controlled. The C-AD chose the types of warning- and access control-systems at Booster consistent with the C-AD OPM 9.1.11 area classifications; a classification system that C-AD and its predecessor departments established in 1974.

Tables in the remainder of this section list results of dose-rate calculations for Booster faults. The C-AD computed these values as upper limits by forcing the beam loss to occur at a single point. For the Booster to AGS, the C-AD assumed a 2.2 GeV unpolarized proton beam to bound the computed doses; however, the shield adequately protects against muons up to 3 GeV.

[47] P. J. Gollon, Booster Tunnel Shield Calculation, Booster Technical Note #66, October 24, 1986

[48] W. R. Casey, Additional Booster Shielding Calculations, Booster Technical Note #93, September 28, 1987

[49] E. T. Lessard, Booster Shield Wall/Door Analysis, March 30, 1989, Appendix 13.2

Table 4.9.b Summary of Booster Flux Loss and Radiation Levels

Loss Flux Type (particles/s)	Area of Interest	Nucleon Energy	Routine Peak Dose Rate (mrem/h)	Peak Fault Dose Rate[50] (mrem/h) (Maximum Proton Flux)
Injection ($3x10^{13}$)	Booster Tunnel Top	200 MeV	0.0009	30 ($4x10^{14}$)
Injection ($3x10^{13}$)	Booster Tunnel Side	200 MeV	0.0002	0.6 ($4x10^{14}$)
Acceleration ($6x10^{12}$)	Booster Tunnel Top	700 MeV	2	2500 ($1x10^{14}$)
Acceleration ($6x10^{12}$)	Booster Tunnel Side	700 MeV	0.4	150 ($1x10^{14}$)
Fault ($1x10^{14}$)	Booster Tunnel Top	2.2 GeV	NA	6800
Fault ($1x10^{14}$)	Booster Tunnel Side	2.2 GeV	NA	450
Extraction ($2x10^{13}$)	B914 Roof Over Septum	2.2 GeV	300	1650 ($1x10^{14}$)
Extraction ($1x10^{14}$)	Remaining B914 Roof	2.2 GeV	3	205,000
Studies ($1.5x10^{13}$)	Booster Tunnel Over Dump	2.2 GeV	20	130 ($1x10^{14}$)
Studies ($1.5x10^{13}$)	Fence Near Dump	2.2 GeV	0.3	2 ($1x10^{14}$)
Fault ($1x10^{14}$)	AGS from Booster	2.2 GeV	NA	750
Fault ($1x10^{14}$)	AGS Labyrinth. Door from Booster	2.2 GeV	NA	1350
Fault ($4x10^{14}$)	Booster from Linac	200 MeV	NA	240
Fault ($1.3x10^{13}$)	Booster from AGS	28 GeV	NA	1400
Fault ($1.3x10^{13}$)	Booster Labyrinth. Door from AGS	28 GeV	NA	2500
Extraction ($1.6x10^{9}$) - Gold	B914 Roof Over Stripper	1.066 GeV	5	10 ($3.2x10^{9}$)
Extraction ($6x10^{11}$)	B914 Plug Door	2.2 GeV	2.7	680 ($1x10^{14}$)
Extraction ($6x10^{11}$)	B914 Man-Gate	2.2 GeV	0.7	160 ($1x10^{14}$)
Extraction ($6x10^{11}$)	B914 North Entrance	2.2 GeV	0.3	70 ($1x10^{14}$)

The C-AD assumed injection losses of 30% ($3x10^{13}$ p/s) at 200 MeV. Assuming that all such losses occur at a single point, i.e., the dump/catcher, a loss produces a peak radiation level of 0.9-µrem/h outside the shield at the top of the berm and less than 0.2-µrem/h horizontally. The C-AD shielded the dump/catcher internally with one meter of a heavy concrete equivalent, and externally with 5.5 m of sand. The Booster Ring was shielded with 4.6 m of sand vertically, and 6.1 m horizontally. Therefore, away from the dump area, injection-energy protons may cause a fault level of 30-mrem/h at the berm top and 0.6-mrem/h at its side for a short period, less than few seconds due to interlocks and alarms.

Normal losses during acceleration are 1% or less, with an average energy of 700 MeV. Conservatively assuming the occurrence a 10% loss at the dump/catcher, normal radiation levels during unpolarized proton running are 2 mrem/h at the top of the Booster's berm near the dump,

[50] Fault levels are detectable by Chipmunk radiation monitors after one pulse. When a Chipmunk detects the fault, the ACS turns the beam off and the accidental dose to an individual in unfenced areas near Booster is well below the C-AD design guideline of 20 mrem.

and 0.4 mrem/h at its side. However, due to potential radiation levels in a full-unpolarized proton fault at other locations of the Booster the C-AD enclosed the Booster berm with a locked fence and limited access to authorized individuals.

Losses at extraction are about 30% at energy of 2.2 GeV. C-AD assumed these losses occur on the extraction septum (80%), and the first dipole magnet (20%) there after inside Building 914. This building, acquired by the C-AD from the decommissioned 50 MeV Linac, has a structural limitation of 1.8 m of soil overhead. Sixty centimeters of iron rising to 2.3 m in the forward direction (space permitting) reduces the routine exterior radiation-level atop of Building 914 to about 300 mrem/h over a 40 m^2 area during operation of an unpolarized proton beam. Most of the remaining roof registers about 3 mrem/h for routine extraction-loss conditions.

Since the internal iron shield does not fully enclose the transfer line between the Booster and the AGS, momentary peak levels at 57-mrem/s could occur under full fault conditions ($1x10^{14}$ p/s). Heavy ion beams would produce about three orders-of-magnitude less. C-AD fenced and secures the roof area above Building 914, and controls access using C-AD OPM 4.46. In addition, the C-AD installed redundant radiation monitors in this region to interlock the beam and limit the duration of the fault. Based on experience at the AGS, radiation monitors detect fault levels after one pulse. When high levels of radiation are detected on the roof the beam is turned off; the fault dose to a person then is much less than the design guideline of 20 mrem since the nearest accessible area is 18 m away.

The first dipole after the heavy-ion stripper in the transfer line between the Booster and AGS requires overlying shielding. Projected energy losses are $1x10^{11}$ GeV/s for Au ions. Poorly stripped ions sweep out of beam at this first dipole. A local iron shield 36 cm-thick reduces exterior levels to less than 5 mrem/h on the roof of Building 914. Fault levels are 10 mrem/h.

During Booster accelerator studies, undertaken by physicists when tuning it, showed that the Booster's beam dump can receive the full beam. They demonstrated this finding with unpolarized protons at $1.5x10^{13}$ p/s at 1.5 GeV; nevertheless, 2.2 GeV is conservatively assumed for radiation protection calculations. The thickness of the steel dump and the iron shield surrounding the dump contribute an additional equivalence of 1 m of heavy concrete. The sand berm over the dump is 5.5 m thick, and extends 15 m horizontally from the dump. The external radiation levels over the top of the berm were 20 mrem during a one-hour study and about 0.3 mrem at the outside fence; fault levels are about six times these levels. In recent years, the need for studies of high-intensity unpolarized proton has diminished. Booster studies do not occur now for more than 500 h/y, and physicists now undertake studies the using much less intense beams of polarized protons or heavy ions.

C-AD allows routine occupancy near the inhabitable side of the shield wall of Building 914, at the man-gate opening. Because of the possible fault levels of 300-mrem/h for a few seconds from high-intensity unpolarized-protons, the C-AD installed an alarmed/interlocked radiation monitor in this building's inhabitable portion. The entrance to Building 914 is 27 m from the shield wall and man-gate. The dose rate at the North Entrance to Building 914 routinely remains below 0.01-mrem/h. C-AD measured the highest levels, near the shield wall and man-gate entrance at 0.1-mrem/h during high-intensity unpolarized proton running.

The C-AD placed at least 2.4 m of concrete shielding at the interface between the Booster tunnel and the Linac's 200 MeV high-energy beam transport (HEBT) tunnel. C-AD estimated the radiation at the Booster side of the interface shield at less than 0.4 mrem/h, assuming a planned loss of less than 1% of the high-intensity beam in the Linac's HEBT. A fault loss of the

maximum Linac beam somewhere in the HEBT line near the interface to the Booster will cause 275-mrem/h in the Booster's tunnel. Chipmunks would detect such losses in the Linac, and automatically turn off the beam within a few seconds.

Multiple redundant lockout of bending magnets in the Linac/Booster's transfer line inhibit the direct transfer of Linac beam into the Booster tunnel unless it is clear of personnel and secure for normal operation.

Certain special areas, where the side shield is unusually thin because of space restrictions, such as in the interface of the Booster with the Linac building and Building 914, have concrete or steel inserts to assure at least 6 m of equivalent earth. This keeps radiation levels below 0.3-mrem/h under normal high-intensity beam-loss conditions.

The C-AD designed the side shielding at the interface between the Booster and the AGS to be the equivalent of 6 m of earth side shielding, so staff can enter the AGS independently of the Booster under any beam condition. This criterion is necessary because the Booster may be operating with heavy ions for NASA experiments at NSRL, while the AGS is under maintenance. A labyrinth passage joins the AGS and the Booster Rings, with High Hazard Radiation Area security doors at each end. Opening these doors turns off both machines. During Booster operation while the AGS tunnel is open, the interlocks on the beam-transfer dipole in the Booster's extraction channel inhibit the transfer of primary beam to the AGS. The worst credible accident, viz., the loss of high-intensity Booster beam at the Building 914 wall near the AGS, causes levels in the AGS tunnel to rise to 750-mrem/h for 1 to 2 seconds. The reverse case is the operation of the AGS while the Booster tunnel is open for maintenance. Whilst this cannot occur under the current configuration, it is included should it be used in the future. For operating the AGS at a maximum beam flux of $2x10^{13}$ protons per pulse at 1.5-second repetition rate, the worst case of total beam loss causes 1400 mrem/h in Building 914 for approximately 1 to 2 seconds. Thus, C-AD has radiation monitors interlocked to each machine's operations.

The C-AD measured as $4x10^{-5}$ the transmission of dose rate from losses in the AGS through the AGS-Booster labyrinth. Extrapolating from this value, the worst-case level is 2500 mrem/h. The reverse, i.e., the worst-case level at the AGS door to the labyrinth from a loss in the Booster is 1000 mrem/h, assuming the applicability of the $4x10^{-5}$ transmission value.

Stevenson and Thomas give the dose equivalent, on an arbitrary scale with distance, from skyshine due to neutrons emitted from the surface of an overlying shield.[51] Neutrons emerging from the top of the shield contribute to dose equivalent on the ground several thousand meters away via interactions in the air column above the shield.

The radiations doses at on-site facilities are slightly greater than those at the site's boundary, depending on assumptions about local shielding on buildings and the energy of scattered neutrons. The neutrons, which scatter off the air back to the ground toward these buildings, have an energy distribution nearly equivalent to the fast flux from a PoBe source (>0.5 MeV); 15 cm of concrete or equivalent local shielding attenuates the skyshine neutrons by about 20-fold. Such attenuation increases the number of leakage neutrons that correspond to a given dose equivalent at a given location, and is included in the onsite estimates for skyshine.

Operators occupy Building 931 facility (BLIP), which is at 80 m from the Booster, for about four hours daily during the day shift only. This corresponds to one sixth of the Booster's operating hours. Occupancy of the former BGRR complex, Building 911 and Building 919 is 8

[51] G.R. Stevenson, R.H. Thomas, "A Simple Procedure for the Estimation of Neutron Skyshine from Proton Accelerators", Health Phys. 46, 115-122 (1984)

hours per day, one third of an operating day for the Booster. Therefore, it is reasonable to assume that Building 931 is the most restrictive location for the yearly skyshine dose from Booster operation.

The C-AD used ICRP Publication 21 for assessing the dose equivalent per unit neutron fluence for a l/E spectra.[52] They estimated a Booster operating schedule of 200 days per year, and conservatively assumed the polarized proton- and heavy ion-modes make up 100 days of the annual running period, as do the unpolarized protons. Additionally, Booster studies require 70 operating days and about one third of the scheduled operating hours during those days. In studies at the AGS Ring, skyshine neutrons from a point loss emerge from a berm-shield surface area of about $2x10^2$ m^2; the C-AD used the same surface area at the Booster.[53] Based on these assumptions, Table 4.9.c lists the specific estimates of annual dose from skyshine due to Booster operation; these estimates are conservative ones, and much less than 5 mrem at the site's boundary, and less than 25 mrem on site.

Table 4.9.c Skyshine Dose for Booster Operation

Loss Location	Nucleon Energy (MeV)	Site Boundary Dose (mrem/y)	Closest Occupied Building Dose (mrem/y)
Injection loss at dump/scraper	200	$6x10^{-6}$	$7x10^{-5}$
Acceleration loss at dump/scrapper	700	$4x10^{-3}$	$2x10^{-2}$
Extraction septum loss	1500	$2x10^{-1}$	$9x10^{-1}$
Heavy ion stripper loss	1066	$1x10^{-1}$	$6x10^{-1}$
Studies losses at dump/scrapper	1500	$4x10^{-2}$	$2x10^{-1}$
Total		$3.4x10^{-1}$	$1.9x10^{0}$

4.10. NASA Space Radiation Laboratory (NSRL) Shielding Analysis

Table 4.10.a lists the routine, maximum, and faulted integrated beam from the NSRL safety analyses.[54] The NSRL uses a variety of beams and beam energies, and C-AD operations keeps track of total integrated beam into the facility. The integrated beam is the product of hadrons and their energy, summed over all ions entering NSRL's beam line from the Booster. For example, one Fe-56 ion at 1 GeV per u is 56 GeV; 10^{12} Fe-56 ions is $5.6x10^{13}$ GeV.

Because of the variety of ions and ion energies at NSRL, the C-AD used several conservative assumptions for beam energy and intensity for radiation-protection purposes.

[52] International Commission on Radiological Protection, Data for Protection Against Ionizing Radiation from External Sources: Supplement to ICRP Publication 15, ICRP Publication 21 [Pergamon Press, October (1973)].

[53] K. Brown, J. Glenn, S. Musolino, A. Stevens, R. Thern, "AGS Shield Tests", AGS Studies Report Number 245 (November 4, 1988)

[54] NSRL SAD, 2001

Table 4.10.a Summary of Routine, Maximum, and Faulted Beam for the NSRL

Quantity	Maximum Value
Annual Energy Flux from Booster SEB	10^{17} GeV in one year
Hourly Energy Flux from Booster SEB	$6x10^{14}$ GeV in one hour
Annual Energy Flux on the NSRL Beam Stop	$3x10^{16}$ GeV in one year
Hourly Energy Flux on the NSRL Beam Stop	$6x10^{14}$ GeV in one hour
Annual Energy Flux on NSRL Targets (0.25 nuclear-interaction lengths)	$3x10^{16}$ GeV in one year
Hourly Energy Flux on NSRL Targets (1.0 nuclear-interaction length)	$6x10^{14}$ GeV in one hour
Maximum, Single Event, Non-routine Point Loss at any Location[55]	$6.75x10^{15}$ GeV

Table 4.10.a prescribes a maximum hourly limit of beam at NSRL as $6x10^{14}$ GeV. Computing prompt radiation using the Tesch formula,[56] the maximum hourly dose rate outside the NRSL shielding is 4.7-mrem/h for 3-GeV protons. Averaged over a year using different ions and energies, the actual hourly dose is much less. Based on the CASIM, a program for high-energy particle ***cas***cade-***sim***ulations,[57] the hourly dose rates at the top of the berm are bounding for the NSRL's shield.

The C-AD estimated the prompt radiation at the nearest point to the Target Room by evaluating the labyrinth connecting the Target Room with the Support Building 958 that NSRL Users and C-AD employees occupy during NSRL operations. This value translates to 0.01-mrem/h for $6x10^{14}$ GeV for 3-GeV protons.

Both the estimate for the skyshine dose from NSRL operations and that for groundwater activation are sensitive to targeting conditions. The maximum integrated beam values listed in Table 4.10.a assume that the beam can be incident on either a target or the beam stop 100% of the time.

The skyshine dose rate was determined by first estimating the number of neutrons greater than 20 MeV emerging from the earthen berm-shield's surface, then applying a skyshine formula. The C-AD estimated the number of neutrons from CASIM calculations performed at 2 GeV incident-energy, in a simplified approximation of a geometry that overestimates the emerging neutrons. Specifically, the berm was assumed to have a circular transverse cross-section, and the neutrons were summed over a ±45° section centered on the beam line.

The C-AD performed CASIM calculations with beam incident on the beam dump, and on a 0.25 interaction length plastic target. The worst case was with the target present, where the

[55] To be less than 20 mrem per fault, the maximum, single-event, non-routine point-loss was assumed as $1.5x10^{14}$ 5-GeV nucleons/sec for 9 seconds from the Booster into the NSRL. Nine-seconds is the assumed response-time of fixed-area radiation monitors to interlock the beam. Thus, a single-event, high-energy nucleon loss of $6.75x10^{15}$ GeV is the maximum fault assumption for any location at the NSRL. It is noted in BNL Memorandum, J. Geller to D. Beavis, RSC Chair, "Time to Chipmunk Interlock for Large Radiation Faults," March 2, 1999 that tests of the chipmunks' internal circuitry yield an absolute minimum response time of 0.65 seconds; nine seconds is adopted to include the response time of the external circuitry that includes relays and critical devices

[56] K. Tesch and H. Dinter, Radiation Protection Dosimetry, Vol. 15 No. 2 pp. 89-107 (1986)

[57] The CASIM code overestimates the dose in the forward direction compared to the actual condition estimated by improved codes, such as MCNPX, at the GeV-energy scale

number of neutrons greater than 20 MeV emerging upward from the shield was 2×10^{-5} per 2 GeV proton. The closest uncontrolled building is Building 919, and the computed dose rate is about 0.02 mrem/y.

The Target Room in Building 958 is ventilated continuously to reduce odors from the specimens; the estimate of air activation therein was made using MCNPX. The beam path length in air is 28 feet, including the length of the re-entrant beam-dump cavity. The concentrations of various radionuclides were estimated using appropriate cross-sections and beams at the NSRL.[58] For ^{39}Cl and ^{38}Cl, produced by spallation reactions with the argon in Target Room air, the C-AD derived cross sections using Rudstram.[59] Based on the maximum annual integrated beam of 3×10^{16} GeV per year on the beam stop given in Table 4.10.a, Table 4.10.b summarizes the annual-activity concentrations averaged over the Target Room's volume and the annual production rates. The C-AD conservatively computed these values ignoring radioactive decay and the Target Room's ventilation.

Table 4.10.b Annual-Activity Released at NSRL

Radionuclide of Interest	Volume Averaged Annual-Activity Concentration, Ci/cc	Annual Production Rate, Ci/y
^{41}Ar	2.2×10^{-11}	2.6×10^{-3}
^{39}Cl	1.2×10^{-16}	1.4×10^{-8}
^{38}Cl	4.3×10^{-16}	4.9×10^{-8}
^{35}S	1.4×10^{-15}	1.6×10^{-7}
^{32}P	9.1×10^{-15}	1.0×10^{-6}
^{28}Al	7.0×10^{-13}	8.1×10^{-5}
^{22}Na	5.6×10^{-17}	6.3×10^{-9}
^{15}O	6.7×10^{-9}	7.4×10^{-1}
^{14}O	2.8×10^{-10}	3.2×10^{-2}
^{13}N	1.6×10^{-9}	1.8×10^{-1}
^{11}C	7.0×10^{-10}	8.1×10^{-2}
^{7}Be	1.9×10^{-13}	2.1×10^{-5}
^{3}H	7.7×10^{-15}	8.8×10^{-7}

Assuming that the production rates are the release rates, the dose to the maximally exposed individual, MEI, of the public using the Clean Air Act Code CAP88-PC is less than 10^{-4} mrem/y.

The continuously operating ventilation system to remove odors from the Target Room maintains the radionuclide concentrations therein at insignificant values. Should the ventilation be off and irradiations and entries still are made over an 8-hour interval, then the dose to an individual who spends an hour in the Target Room would be a small fraction of a mrem.[60] Thus, there are no significant hazards from loss of the Target Room's ventilation.

---

[58] NSRL SAD, 2001

[59] Barbier, M., Induced Radioactivity, Section 2.3. North-Holland Publishing Company, 1969

[60] R. Karol, Dose to Individual in BAF Target Room Following Ventilation Failure, March 19, 2001 (Revised 4/19/01), Appendix 12

4.11. Alternating Gradient Synchrotron (AGS) Shielding Analysis

In estimating the degree of radiation risk, the C-AD made certain assumptions about the beam's intensity and beam loss at the AGS, based on the design of the AGS's shielding: Table 4.11.a gives these values. The fundamental assumption is that C-AD designed the shield to mitigate the greatest radiation hazard. Thus, the AGS was analyzed assuming a maximum beam intensity of $1x10^{14}$ unpolarized protons per second.

Table 4.11.a Summary of Operational Beam Loss Assumptions for AGS Ring

Type of Loss and Beam Energy	Spot Loss Near Thick Shield (% of beam)	Spot Loss Near Thin Shield (% of beam)	Distributed Loss (% of beam)
Injection Losses (1.5 – 2.2 GeV)	8	1	1
Transition Losses (7 GeV)	0.9	0.05	0.05
Extraction Losses (27.5 GeV)	0.9	0.05	0.05
Studies Losses (10 GeV)	4.9	0.05	0.05

Table 4.11.a assumes that protons inject into the AGS Ring through the Booster. Direct injection into the AGS is possible by transporting beam from the Linac through HEBT but not without modifications; it is included in the discussion should it be used in future. In this present mode of operation, injection losses are approximately 60% at 200 MeV, based on the measurements reported during the 1986 Slow Extracted Beam run. This lost energy flux at injection, $1.2x10^{13}$ GeV/s, is well below the 8% at 1.5- to 2.2-GeV using the Booster injection scenario. Thus, the injection losses from Booster operation bound the dose consequences for either mode of operation.

Table 4.11.b explicitly shows unpolarized proton losses. The C-AD assumes additional shielding by magnets of 0.42 m of iron pole tip to attenuate radiations rising vertically towards the top of the shield. Experience and measurements show that when viewed indirectly through radiation-survey measurements at the outer surface of a thick shield (several m thick), a point loss inside the AGS Ring has a characteristic source length of 16 m outside the AGS Ring shielding for the most localized loss.

Table 4.11.b Proton Beam Loss and Location in the AGS Ring

Loss Type	Protons Lost per Year	Protons Lost per Meter-Year	Energy (GeV)	Concrete Thickness (m)	Earth and Soilcrete[61] Thickness (m)
Injection[a]	6.6×10^{19}	4.1×10^{18}	1.5 – 2.2	0.3	6.0
Injection[b]	8.2×10^{18}	1.0×10^{16}	1.5 – 2.2	0.3	5.7
Injection[a]	8.2×10^{18}	5.1×10^{17}	1.5 – 2.2	0.3	4.5
Transition[a]	7.4×10^{18}	4.6×10^{17}	7	0.3	6.3
Transition[b]	4.1×10^{17}	5.1×10^{14}	7	0.3	5.7
Transition[a]	4.1×10^{17}	2.5×10^{16}	7	0.3	4.5
Ejection[a]	7.4×10^{18}	4.6×10^{17}	27.5	0.3	6.3
Ejection[b]	4.1×10^{17}	5.1×10^{14}	27.5	0.3	5.7
Ejection[a]	4.1×10^{17}	2.5×10^{16}	27.5	0.3	4.5
Studies[a]	4.2×10^{19}	2.6×10^{18}	10	0.3	6.3
Studies[b]	4.1×10^{17}	5.1×10^{14}	10	0.3	5.7
Studies[a]	4.1×10^{17}	2.5×10^{16}	10	0.3	4.5

a: 16 m spot loss
b: Loss distributed around Ring, 800 m

Essentially, two types of shield exist at the AGS Ring. One is a 6 to 6.9 m thick earth and soil-cement shield covering the major areas overlying the injection, transition, ejection, and studies losses. The other is a 4.5 to 5.1 m thick earth and soil-cement shield, covers the remaining parts of the AGS Ring. The beam's height is 3.3 m below the concrete roof of the AGS Ring, which supports the overlying layers of soil and soil-cement. Table 4.11.c lists the location of specific thicknesses of top shield relative to the AGS Ring's sectors.

Table 4.11.c Thickness of Top Shield

Top of AGS Ring Sector	Shield (meters)
G20 - I13	6.0
I13 - J5	5.1
J5 - K5	6.3
K5 - L10	5.1
L10 - A15	6.0
A15 - B10	6.0
B10 - D10	4.5
D15 - E20	4.5
E20 - F20	6.9

The section F20 through G20 is the AGS's target-building portion of the Ring, and the thickness of the shield top is 2.4 m heavy concrete or more, i.e., 4.7 m earth equivalent or more.

[61] Soilcrete is a soil-cement mix. Its density is between that of soil and concrete and is about 2 g/cm^3. C-AD added soilcrete as an outer layer of shield in 1993 to direct the load from overlying layers of the AGS earth-berm shield toward the footings of the arching shield. A plain layer of earth would have overloaded the roof of AGS. The addition of a shield layer allowed for greater beam intensity in AGS that was now possible due to the start-up of the Booster.

The shield thickness for the berm top is not continuous; the following penetrations punctuate the berm:

- 2 escape hatches
- A series of pipes with diameter from 20- to 60 cm
- 5 fan houses
- 4 labyrinths
- 2 plug doors
- 1 gate
- 1 trench
- 1 cable run
- The north and south wiring tunnels
- The FEB tunnel
- The north conjunction area
- The target building

Additionally, a roadway crosses the berm top between D10 and D15 and near J10. The earth shield beneath the roadway is 3 m thick.

For a planned beam loss, the assumption is that part of it occurs at a single place, such as the internal dump/catcher at J10 shielded by the thicker part of the berm, and the remainder of the loss distributes uniformly in the AGS Ring. Additionally, as viewed from the outside of a shield, the C-AD assumes a 16 m loss to occur routinely at any thin part of the Ring shield, viz, rather than the less conservative distributed loss.

Tables 4.11.d and 4.11.e list the computed dose-equivalent rates for the assumed beam losses in the AGS. These overly conservative estimates demonstrated that adequate shielding is in place. Many areas have had shielding upgrades not reflected in these computed dose rates. Protection for the penetrations in Table 4.11.e is shielding, interlocking radiation-monitors, fences, and access controls.

Table 4.11.d AGS Radiation Level Summary

Shield Type	Area of Interest	Operation	Nucleon Energy (GeV)	Routine Dose Equivalent Rate (mrem/h)	Fault Dose Equivalent per AGS Pulse[62] (mrem/pulse)
Thin				0.5	0.02
Thick			0.3		0.001
Distributed	AGS Ring Top	Injection	1.5 – 2.2	0.002	-
Thin				0.1	0.1
Thick				0.08	0.005
Distributed	AGS Ring Top	Transition	7	0.003	-
Thin				0.5	0.4
Thick				0.3	0.02
Distributed	AGS Ring Top	Extraction	27.5	0.001	-
Thin				0.2	0.02
Thick				0.6	0.005
Distributed	AGS Ring Top	Studies	10	0.0004	-

Table 4.11.e Fault Levels at AGS Ring Penetrations[63]

Area of Interest	Fault Dose Equivalent per AGS Pulse (mrem/pulse)
C-14 Escape Hatch	30
Booster/AGS Interface	5
Linac/AGS Interface	30
Road over AGS Berm	50
North Conjunction Area	50
Pipes (Weakest Case)	100
Fan House Ducts (Weakest Case)	500
Entrance Labyrinths (Weakest Case)	10
Plug Doors (Weakest Case)	10
AGS-Booster Trench	500
Side Wall Interface w/Target Bldg 912 (Weakest Case)	10,000

[62] 10^{14} p/s at 0.84 Hz. In appropriate areas, fault levels are detectable by radiation monitors instantaneously, and if interlocked, the beam will shut down within 9 seconds. The C-AD estimates that three full-energy AGS beam-spills may occur with this 9-second interval at the current repetition rate of 0.42 Hz. For areas where each fault may produce more than 20 mrem, a system of access controls, such as barriers and locked fences are used. The C-AD classifies these areas into one of the categories described in C-A-OPM 9.11.1.

[63] The attenuation factors are from the Beavis Report (D. Beavis, Ring-Me, Potential Radiation Fault Levels from Beam Faults in the AGS Ring, AGS/EP&S/ Technical Note No. 138, October 1991). Beavis multiplied the source term by 3.3 for this tabulation to account for the potential 10μA proton beam operations at 100% duty factor (3000 AGS pulses/h). Protection is shielding, interlocking radiation monitors, fences, and access controls.

Skyshine and direct radiation at buildings close to AGS is a function of beam loss at J-10, the location of the transition and extraction losses. Near J-10, beginning at the onset of catching and scraping for studies, transition, and extraction losses, and extending at least 15 m past their most forward point, there is an overlying earth shield 6.3 m thick, plus 0.6 m concrete with a berm rise over run of 1 to 2. It reduces annual dose equivalent in Buildings 919 and 921 below 25 mrem in one year for an individual.

If J-10 is not used, studies, transition, and extraction losses occur near E-20. Beginning at the onset of these losses and extending at least 15 m past the most forward point at which they occur, there is an overlying earth shield 6.9 m thick plus 0.6 m concrete. The side of the berm has a rise over run of 1 to 2. This shield reduces dose equivalent from skyshine and direct radiation in Building 911 to less than 25 mrem in one year.

Skyshine and direct radiation from injection losses at the AGS affects Buildings 931A and 931B. At the onset of injection losses and extending at least 15 m beyond their most forward point, there is an overlying earth shield at least 5.1 m thick plus 0.6 m concrete. The berm rise over run is 1 to 2. This shielding reduces dose equivalent to below 25 mrem in one year for persons in Buildings 931A and 931B.

In analyzing direct radiation through the AGS's berm sides, the C-AD visualized its Ring shield as 25 slabs of side shield of varying thickness to estimate the number of emerging neutrons that contribute to dose equivalent at a distant point. The closest point in the analysis is 15 m from the base of the AGS berm, viz., the approximate location of the fence. The analysis additionally includes a direct radiation component from neutrons emerging from the top of the berm. The furthest point used in calculating direct radiation exposure is 150 m. The C-AD did not take credit for additional shielding from interposed buildings, trees, and hills.

For archival purposes, the authors note that the C-AD's predecessor, the AGS Department, formed an AGS Ring Shield Upgrade Group in 1988 to define the maximum beam losses for future running, and to prepare a proposal for additional radiation protection. Their work is described in several papers.[64, 65, 66, 67, 68, 69, 70, 71, 72, 73, 74] The C-AD used simple analytical

---

[64] Th. Sluyters to D. I. Lowenstein, "AGS Ring Shield Upgrade Group, BNL Memorandum, July 26, 1988

[65] G. Bennett, "Skinny Shield Studies/Calculations," Informal Note (July 19, 1988)

[66] E. T. Lessard to AGS Ring Shield Upgrade Group, "Design Criteria," BNL Memorandum, August 9, 1988

[67] AGS Staff, Shielding of the AGS from the Conversion Program, Accelerator Department, Brookhaven National Laboratory, Upton New York, 11973, A Report Prepared for the AEC Advisory Panel on Accelerator Safety (June 15, 1966)

[68] G. Bennett, L. Blumberg, C. Distenfeld, H. Foelsche, W. Moore, T. Toohig and G. Wheeler, Shielding of the North Experimental Facility and the Slow External Beam Extension, Accelerator Department, Brook haven National Laboratory, Upton New York, 11973, A Report Prepared for the AEC Advisory Panel on Accelerator Safety (February 25, 1970)

[69] A. J. Stevens to J. W. Glenn, "Preliminary Estimate of Skyshine from AGS Ring," Informal Memorandum, October 10, 1988

[70] E. T. Lessard to J. W. Glenn, "AGS Ring Shielding Upgrade Group and Goals," BNL Memorandum, November 4, 1988

[71] K. Brown, J. W. Glenn, S. Musolino, A. Stevens, R. Thern, "AGS Shield Tests," AGS Studies Report, Number 245 (November 21, 1988)

[72] H. Foelsche and E. T. Lessard to J. W. Glenn, "Specific Shield Requirements for the AGS Ring Upgrade," January 23, 1989

[73] K. Brown to J. W. Glenn, "Losses and Activation in the AGS," BNL Memorandum, December 8, 1988

[74] H. Foelsche and E. T. Lessard to J. W. Glenn, "Specific Shield Requirements for the AGS Ring Upgrade," January 23, 1989

functions[75,76,77] to estimate the on-site and off-site dose equivalent at large distances up to 1000 m. They assumed external exposure limits of 5-mrem/y offsite, and 25-mrem/y at uncontrolled buildings onsite as a basis for minimum thickness of AGS shielding.[78,79]

From current running modes for the AGS, the annual dose equivalent from direct radiation to workers in nearby buildings is less than 5 mrem per year. The estimated annual dose equivalent to the nearest person from skyshine is much less than 1 mrem. For uncontrolled areas where buildings may exist, the maximum fault-dose-rate within the nearest occupied building is less than 5 mrem in one hour. Actual doses as measured by TLD studies reveal that these estimates are very conservative, and that prior shielding analyses for the AGS were adequate.[80]

4.11.1. U-Line for AGS Experiments Shielding Analysis

Historically, the U-line has had two locations for high intensity, high-energy fixed-target experiments. The C-AD used the V-target station for the g-2 experiment. Neutrino experiments used a neutrino target and horn that existed in the U-line blockhouse, which is past the first dipole (WD1) that bends the beam towards the RHIC. Both blockhouses no longer accommodate high-intensity operations. The C-AD conducts such operations in the U-line only, with integrated intensities consistent with the RHIC's operations.

The C-AD infrequently undertakes low-intensity experiments in the U-line blockhouse; the RSC[81] reviews them on a case-by-case basis for radiation concerns. The section of U-line downstream of WD1 has a thin transverse shield. The C-AD RSC has not rated this section or the U beam-dump for full AGS intensities.[82] Soil activation adjacent to the tunnel wall limits the amount of beam interaction that can occur in this tunnel section. The C-AD produces activation during their low-intensity experiments with beam into the U beam-dump. The last portion of the U-line berm before the beam dump has a cap to prevent leaching of radionuclides.

4.11.2. AGS to RHIC (AtR) Transfer Line Shielding Analysis

The C-AD uses the AtR to transport protons and ions from the AGS to the RHIC. The C-AD operates the AtR to support the RHIC program with the allowed beam intensities intended for RHIC experiments. The C-AD accounted for additional beam-allowance for beam tuning and tests to the beam dump at the end of the W-line in their analysis of the RHIC Project. The past years of beam operations provided information on residual activity, external dose, soil activation, and beam losses. The intensity upgrade per ring desired by the RHIC will increase the AtR beam's intensity by a factor of 2.2.[83] The C-AD reviewed the RHIC Project's analysis, scaled it

---

[75] G. R. Stevenson, R. H. Thomas, "A Simple Procedure for the Estimation of Neutron Skyshine from Proton Accelerators", Health Phys. 46, 115-122 (1984)

[76] K. Tesch, "A Simple Estimation of the Lateral Shielding for Proton Accelerators in the Energy Range 50 to 1000 MeV", Radiation Protection Dosimetry 11, 165-172 (1985)

[77] K. Tesch, "Comments on the Transverse Shielding of Proton Accelerators", Health Phys. 44, 79-82 (1983)

[78] Report of the AGS Experimental Area Shielding Upgrade Committee, BNL-45892, August 1990

[79] AGS SAD, 1993

[80] P. Bergh, C-A ALARA Committee Meeting Minutes For The Review Of CY 2010 Dose Reports

[81] RSC Minutes of April 29, 2003

[82] RSC minutes of Dec. 29, 1999

[83] The AtR analysis assumed $2x10^9$ Au ions per bunch and the intensity upgrade corresponds $4.4x10^{11}$ per bunch

up for the upgraded RHIC intensity, and concluded there are no radiological concerns for exposures due to upgraded AtR operations.

Stevens calculated the prompt radiation dose in regions exterior to the berm over the AtR, assuming a beam intensity equivalent to $2x10^{11}$ protons per bunch, and 114 bunches delivered to each collider ring.[84] This is equal to the former ASE's intensity limit of $2.4x10^{13}$ protons per ring. The original design calculations for RHIC assumed twice the then-current regulatory value of the neutron-quality factor in anticipating a future change to the neutron-radiation-weighting factors first presented in ICRP 60.[85] The radiation-weighting factor replaced the quality factor in the 2007 version of 10 CFR 835. Although the neutron-equivalent dose is a strong function of the neutron energy, in no case is the value of the new neutron-weighting factor greater than twice the former quality factor. Thus, the C-AD retained their assumption of doubling the neutron-quality factor to estimate radiation doses from routine operations and beam faults at the upgraded RHIC intensity. The RSC will evaluate and approve any additional shielding, postings for radiological controls, and possible additional personal monitoring requirements before the C-AD implements the intensity upgrades. The C-AD lists their estimates of the higher fault doses for the increase in intensity in the following analyses.

Most regions of the AtR line experience very small beam loss at normal injection energy, i.e., about 0.05% of the injected beam at a single point such as a magnet, and 0.1% over the entire length of the line. A beam stop is located in the AtR line where the X and Y lines split from the W line; the C-AD assumes that the dump absorbs 100 times the beam lost in the rest of the line. The Big Bend Region is the X and Y injection arcs where the magnet elements are "dense." The other regions are upstream of the injection arcs where the magnet elements are "sparse." In the "dense" magnet regions, the generations of cascade interactions are spatially closer to each other, thus causing higher peak fluence closer to the original interaction compared to those in the "sparse" regions. The C-AD computed dose equivalent rates as 0.26-mrem/h (0.52-mrem/h intensity increase) from the Big Bend Region, and 0.15-mrem/h at other regions (0.33-mrem/h for the intensity increase). Table 4.11.2.a summarizes annual equivalent doses from each region with gold- and polarized proton-beam running.

Table 4.11.2.a Annual Equivalent Dose at RHIC Scaled for Intensity Upgrade

	Big Bend Region, mrem	Other Regions, mrem	Big Bend Intensity Upgrade, mrem	Other Regions Intensity Upgrade, mrem
Au	276	162	607	356
Protons	32	18	70	40
Total	308	180	677	396

Knowing the maximum loss over 10 seconds is important in determining the sensitivity of Chipmunk's response to the assumed routine losses. The least sensitive area would be "other regions". For this case, Au-beam is 1.43-mrem/h, and proton-beam is 3.12-mrem/h.

[84] A. J. Stevens, AD/RHIC/RD-83, Analysis of Radiation Levels Associated with Operation of the RHIC Transfer Line, December 1994

[85] ICRP Publication 60, 1990 Recommendations of the International Commission on Radiological Protection, Table 1.

Table 4.11.2.b summarizes the computed dose-rates on the berm over the AtR that the C-AD conservatively computed; fault studies show the actual doses are a factor of 2 or more lower. The C-AD examined two distinct, credible cases: (1) The loss of full beam at an arbitrary point fives time per year, which persists for two AGS pulses, and, (2) an order- of-magnitude higher loss than normal, 0.5% at a point, and 1% over the length of the AtR line for 5% of the collider fills in a year.

Table 4.11.2.b Fault Equivalent Dose Rates

	Big Bend Region	Other Regions	Big Bend Intensity Upgrade	Other Regions Intensity Upgrade
Two AGS pulses or 4.8×10^{12} 28 GeV protons lost at an arbitrary point 5 times/y	12.5 mrem/fault 63 mrem/y	7 mrem/fault 35 mrem/y	25 mrem/fault 123 mrem/y	14 mrem/fault 70 mrem/y
0.5% point loss for and 1% total loss for 5% of the fills each year	154 mrem/y	90 mrem/y	308 mrem/y	180 mrem/y
Total	217 mrem/y	125 mrem/y	217 mrem/y	431 mrem/y

Different regions of the berm over AtR have different postings and access controls. There is a locked fence from first portion of the ATR berm, from downstream of the V Target blockhouse to past the W beam-dump, near Thompson Road; the C-AD posts it as a Radiation Area, controlling access to this area by a C-AD OPM. The section of the berm over the X and Y arcs that encompasses Thompson Road is an Uncontrolled Area. Previously, the C-AD posted this area as a Controlled Area but the RSC's review recommended changing the area to an Uncontrolled Area.[86] The section of the X and Y arcs downstream of Thompson Road are inside areas that the C-AD posts as Controlled Areas. They contain the Big Bends discussed in the calculation above.

In a series of memoranda and reviews, the RSC documented changes to the posting and protection for AtR. Some approved changes removed unnecessary controls that caused downtime at the RHIC and potential risk to personnel.[87, 88, 89, 90, 91] That is, the RSC recommended removing three Chipmunks on the side of the soil shield within the locked fence; these radiation monitors had higher than normal failure-rates due to outdoor environmental conditions and their maintenance posed slip-and-fall risks to personnel to during winter. These hourly monitors were replaced by TLDs to provide monthly- or quarterly-integrated monitoring of doses at the fence on the berm's west side.

[86] Minutes of RSC Meeting of Feb. 3, 2009
[87] D. Beavis, "Proposed Changes for U/W Beam Line", Nov. 14, 2008
[88] D. Beavis, "Proposed Changes to the Radiation Protection of Thompson Road", Nov. 18, 2008
[89] D. Beavis, " Chipmunk Data for Thompson Road", Jan. 30, 2009
[90] Minutes of RSC Meeting of Nov. 18, 2008
[91] Minutes of RSC Meeting of Feb. 3, 2009

Seven TLDs monitor the dose along the AtR and near Thompson road; Table 4.11.2.c lists the background-subtracted dose registered for the CY10. The C-AD did not use an occupancy factor for evaluating this dose. The areas outside the AtR fence are uncontrolled; the RSC requested TLDs TK257-259 to monitor them. The C-AD de-posted Thompson Road to an uncontrolled area in Feb. 2010.[92] The four TLDs at the RHIC's X and Y arcs monitor the potential dose on this uncontrolled road. Calendar year 2010 experienced large losses in the AtR due to the transport of the low-energy Au beams to the RHIC. The largest residual activities measured in the AtR occurred after this run because of the beam losses during low-energy RHIC operations with 3.85 GeV per nucleon Au transfer to RHIC. Even under these conditions, the levels were less than 25-mrem/y for full-time occupancy at Thompson Road and the areas adjacent to the AtR.

Table 4.11.2.c AtR TLD Data from Run 10

Position	TLD number	Dose (mrem)
Upstream AtR	TK257	1
ATR near WD1	TK258	0
Outside UGE2	TK259	2
X-Arc south of road	TK292	4
X-Arc north road	TK200	4
Y-Arc south road	TK293	0
Y-Arc north road	TK199	12

The RSC reviewed issues related to Thompson Road for the increased beam-transfer intensities used for the RHIC upgrade.[93] RSC will decide before an increase if the road remains an uncontrolled area or a Controlled Area.

The C-AD protects thin-shielded areas near locations of AtR losses with interlocking Chipmunks. There are four over the injection arcs near Thompson Road. Chipmunks protect the exit labyrinths, where required, against unusual beam conditions.

The C-AD monitors losses in the AtR from the AGS to the W dump, and software looks for large differences in the beam-current transformers, sending an alarm to operators when the loss is too large. The C-AD's OPM instructs operators on how to respond to them. C-AD also monitors losses in the RHIC injection arcs and provides the responses to alarms for operators in the C-AD OPM.

The RHIC Project computed skyshine from losses in AtR to be less than 0.01 mrem per year to nearby buildings. The increase by a factor of 2.2 in beam for the RHIC's intensity upgrade is insignificant for nearby facilities. The closest structures previously evaluated were 1005S, which now is a Controlled Area, and the support building 1000P, which the C-AD posts as a Controlled Area. The dose at the site boundary is minuscule. Run 10 was the first long duration of low-energy gold transfers to RHIC. There are three dominant parameters increasing concerns when transferring low-energy ions from the AGS to the RHIC. Firstly, the physical size of the beam is larger and has less clearance in the apertures in the transport. The percentage of beam lost during such transfers rises with falling energy. Secondly, the lifetime of low-energy

[92] D. Beavis, " Thompson Road as an Uncontrolled Area", Feb. 17, 2010
[93] RSC minutes of June 14, 2011

beams declines with decreasing energy, and therefore, the C-AD fills RHIC more frequently. Finally, the stripping of the Au ions to fully stripped gold becomes less efficient with low energy causing losses in transport downstream of the stripping foil.

The low-energy gold Run 10 operations are a good illustration of the C-AD's approach to a new operating condition. First, a physicist familiar with beam transport and the operating requirements for the RHIC estimates the amounts of beam expected to be lost in the AtR.[94] These values serve in estimating potential dose and soil activation.[95,96,97] The RSC reviews these losses and expected radiological concerns and makes recommendations.[98,99] The C-AD established a series of procedures, soil monitoring, additional instrumentation, and surveys before allowing low-energy beam operations. Physicists developed a conservative schedule for beam operations and the C-AD collected and analyzed data, giving more flexibility as the run went on based on their evaluation of it.

The C-AD modified the curved labyrinth near the W beam-dump to decrease the leakage of neutrons out of it. Shield blocks now shadow the entrance of the labyrinth from the neutrons emitted from the beam dump.

C-AD covered the W beam-dump with a cap to prevent leaching from soil surrounding the beam dump. C-AD placed removable soil samples near the adjacent tunnel's wall to obtain an empirical measure of the activation products created in the soil.

The RCT's radiation surveys continue to demonstrate that residual activity in the transfer line is not an issue. They also imply that the beam losses are small along most of the transport line. The C-AD attempted to determine the losses with the current monitors along the transport.[100] They typically are about 2% of the total transported beam or less based on the current transformers, and most likely are close to zero due to the transformers inaccuracy. The C-AD uses these transformers to detect large beam losses and alarm operators to an unwanted operating condition.

4.12. Collider (RHIC) Shielding Analysis

The ability of the RHIC magnets to sustain their superconducting state in the presence of particle losses limits the beam's systematic losses. Particles leaving the beam pipe deposit energy in the form of a cascade of hadronic- and electromagnetic-particles that result in a significant temperature rise within a few meters from the loss point. A temperature rise of more than 0.5 K will destroy the superconducting state of the Nb-Ti wire, which the C-AD terms a "quench." Several hours may be required to cool the magnets back down to the required superconducting temperature, during which the experimental program stops. The approximate energy deposition needed to initiate a magnet quench is 4 mJ/g of superconductor, and can be achieved by as little as one part in 10^4 of the circulating beam. Because such a small amount of beam loss can greatly disrupt the experimental program, the collider effectively must be a loss-free facility. The C-AD directs small amounts of beam losses to specific locations to avoid losses elsewhere in the machine. These losses occur at the collimators, beam scrappers, and at a rapid acting (<1 ms)

[94] T. Satagota, "RHIC Low Energy Beam Loss Projections", Sept. 1, 2009
[95] D. Beavis, "Extending Routine Operations of RHIC and AtR to Low Energy", August 28, 2009
[96] D. Beavis, "AtR Low Energy Operations-Potential Dose", Updated Oct. 28, 2009
[97] D. Beavis, "Low Energy Operations of AtR-Potential Soil Activation", Updated Oct. 28, 2009
[98] RSC Minutes of Sept. 30, 2009
[99] RSC Minutes of Oct. 14, 2009
[100] V. Schoefer to D. Beavis private communication

beam-removal system that protects the magnets from the onset of beam loss by directing the beam into the beam dumps at the ring's 10 o'clock areas.

Several of the C-AD's systems protect the machine from damage; they are not Credited Controls, but limit the amount of beam lost in local locations. The beam-loss monitors detect ionization from beam losses, and, if they exceed a predetermined threshold, remove the beam permit for beam. The magnets also have quench-detection circuitry that removes the beam permit above a set threshold. The loss of a beam-permit activates the abort system that removes the beam from the machine by kicking it into the beam dumps. It is difficult to analyze the machine's history without the actions of these systems in place.

The beam-abort system removes the beam in a single turn by firing the abort kickers, sited about 25 m before the respective beam dump. There are a few bunches missing from the circulating beam's pattern, known as the abort gap; it allows the abort system to energize without kicking the beam into the machine's components. Each ring has a set of abort kickers and their associated beam dump. The C-AD designed the beam dump and soil shielding for a beam kicked into the beam dumps. The abort system is not a Credited Control, but plays an important role in removing beam from the machine and depositing it into the beam dumps. The long-term exposure analysis assumes that the abort system is working properly. The ACS for the RHIC specifies beam shutters to remove any beam should the abort system fail. In the last 11 years, the beam hit the shutters once when operations inadvertently masked the abort system before a beam store. The RHIC Project envisioned this type of event, and set up appropriate procedures to check the shutters after such an event.

The Collider beam's have a dump on either side of the 10 o'clock intersection region, and dumped beam accounts for about 85% of the total loss of the beam's energy. The RHIC Project's conservative analysis of loss at the dump demonstrated that the berm shielding at this location keeps the yearly dose at the nearest offsite location to less than 1 mrem/y.[101]

Subsequently, an independent analysis by Beavis considered a higher intensity and energy and demonstrated that any expected combination of increase in energy and intensity increase will not exceed the DOE's or BNL's dose limits at the site boundary or onsite.[102] A small area of the berm over each of the beam dumps is fenced and locked to control access for ALARA purposes to reduce potential on-site exposure.

Stevens examined beam loss on the primary and secondary collimators, located on either side of the 8 o'clock intersection region, to determine the potential dose rates from their usage.[103] Assuming that 20% of the beam in each ring interacts on the collimator and, at most, 10% of the stored beam in an hour, the resulting dose was less than 1 mrem/y at uncontrolled onsite locations and at the nearest offsite locations. Beavis and Nemesure examined the records of annual beam scrapped on the collimators for the last five years finding it was between 2% and 22% of the yearly estimates in the RHIC's analysis.[104] This reflects the conservative estimate of the number of full energy stores and the maximum intensity for each of them. An increase in energy and intensity will raise the skyshine dose only by a factor of 2.5, which is well below the DOE's requirements and less than 2.5 mrem per year. Beavis based this projected estimate on the very conservative number of fills (2345) to full energy and intensity, which the C-AD expects to

[101] Presentation to the Radiation Safety Committee on April 3, 1996 by A. J. Stevens in RSC files
[102] D. Beavis, " Skyshine Dose from the RHIC Beam Dumps", August 31, 2010
[103] A. J. Stevens, AD/RHIC/RD-113, Radiation Safety Considerations Near Collimators, April 1997
[104] D. Beavis and S. Nemesure, "Store Losses on the RHIC Primary Collimators", May 16, 2011

be lower. For upgraded running, the C-AD will enclose and lock an extended area of the berm at the collimators to control access for ALARA purposes.

Gollon analyzed all the multi-leg penetrations in the Collider and Stevens recalculated.[105] Gollon amended the re-calculated results to conform to the as-built conditions.[106] Beavis reanalyzed the personnel labyrinths for the low-energy gold run.[107] There was general agreement between the RHIC Project analysis and the new analysis. In several cases, Beavis used different assumptions. Both analyses demonstrated that 4 out of 18 of the labyrinths may exceed a dose of 100 mrem in a maximum credible incident with an energy and intensity upgrade. C-AD will add protections to these areas prior to upgraded running.

The RHIC Project estimated[108] the doses in an MCI near the ventilation shafts. For emergency ventilation ducts, the computed doses at the berm surfaces range from 46 -to 831-mrem. At the vent-fan covers, at least 1 m above the berm, the doses range from 27- to 475-mrem. Beavis scaled the RHIC estimates[109] for the upgrade energy and intensity for an MCI. The doses range from 68 mrem to 1200 mrem. The areas where the dose in an MCI is above 500 mrem are fenced to avoid access close to the vent. For upgraded running, the C-AD will post areas where personnel can receive 100- to 500-mrem in an MCI as a Controlled Area-TLD required. Beavis examined the ventilation shafts for possible chronic dose during low-energy gold operations; those areas with an excessive dose are within fenced and posted areas that the C-AD locks to prevent entry during Collider operations.

There are several straight-through penetrations into the Collider beam's enclosures. They comprise the cylindrical shafts used for survey, and the large rectangular shafts on either side of the 6-, 8-, 10-, and 12-o'clock experimental halls to permit cryogenic piping to bypass the experiments. These calculations[110] result in doses at penetration exits ranging from 12-rem for a large cryogenic pipe shaft, to 220-mrem for 30-cm cylindrical shaft. For a person standing besides the opening instead of directly over it, the dose is a factor of 10 lower. To prevent the possibility of causing these doses, C-AD excludes personnel from these shafts by a 2 m high fence and locked gates. Operators sweep fenced areas before allowing beam operations.

Dose from muons at the site boundary are small. The RHIC Project estimated that the muons from the blue beam dump[111] contribute a dose of 0.15- to 0.42-mrem/y; the upgrade in the beam's intensity raises them to 0.3- to 0.9-mrem/y. The RHIC Project estimated that the muon dose from the blue collimator[112] was between 0.13 and 0.7 mrem/y at the site boundary. The RHIC beam intensity upgrade would increase it to 0.3-1.5 mrem/y. The RHIC Project assessed the contributions from muons generated at the IRs to be at least a factor of 10 lower at the site boundary.

The change in the muon dose external to the shielding as a function of the beam's energy does not scale simply as does hadronic transverse radiation. The muon radiation external to the RHIC berm has been momentum-dispersed due to its flight path through the magnets. In

---

[105] RHIC SAD, Appendix 16, Shielding of Multi-Leg Penetrations into the Collider Tunnel, October 1999

[106] P. J. Gollon, AD/RHIC/RD-76A, Amendment to Shielding of Multi-Leg Penetrations into the RHIC Collider, July 1996

[107] D. Beavis, "RHIC Labyrinths", Jan. 14, 2010

[108] RHIC SAD Appendix 16

[109] D. Beavis, "Potential Dose near RHIC Emergency Ventilation Ducts", Dec. 18, 2009

[110] RHIC SAD, Appendix 19, Evaluations of Straight Through Penetrations, October 1999

[111] A. Stevens, AD/RHIC-46, Radiation from Muons from RHIC, 2/1/89

[112] The RHIC estimate has been scaled to account for the blue dump being located at 10' O'clock instead of 12 O'clock

addition, the path is complicated, and the C-AD needs information on the integrated energy loss of the muons. Beavis made an estimate[113] to determine the change of muon dose when proton energy increased from 250- to 300-GeV. The rise in proton energy could elevate the dose due to muons by a factor of 4: Beavis expects it to be smaller than a factor of 2. A factor of 4 corresponds to 3 mrem per year at the site's boundary from muons from the blue beam dump; this is lower than the DOE's regulatory limit of 100 mrem per year and lower than BNL's limit of 5 mrem per year per facility at the site boundary. The RSC reviewed[114] the muon estimates, recommending that the expected doses are sufficiently low that the C-AD can conduct commissioning at the higher energy while completing a more detailed analysis[115] or measuring the muon leakage. Due to the need for larger power supplies, the C-AD does not expect have the capability for higher energy for several years. The RSC will continue to review the commissioning work for a higher energy beam as capability develops.

The maximum credible dose to a person standing on the RHIC berm ranges from 85 mrem to 250 mrem for the upgrades.[116] Beavis scaled the dose from the RHIC Project for the energy increase, intensity increase, and a 1 m distance to waist height; the estimated dose to a person on Renaissance Road over the ring is 140 mrem in an MCI. For the past 10 years, this area of the berm was an Uncontrolled Area. Anticipating the upgrades, during Run 11, the C-AD posted Renaissance Road over the RHIC berm as a Controlled Area. The road crosses the ring in the middle of the sector, which is an unlikely location for an MCI. The C-AD monitors the area with a Chipmunk and a TLD. The TLD dose always has been consistent with zero doses above background.

The C-AD employs TLDs to monitor the entire C-AD facility including the RHIC Ring. They [117] confirm that dose estimates are conservative, and that posting the entire RHIC facility as a Controlled Area is adequate for present intensities. The C-AD does not expect yearly doses from chronic losses to be an issue for increases in intensity and energy. The primary issue for leaving the RHIC's berm as a Controlled Area is the dose in a maximum credible incident.

The C-AD will upgrade weak locations near penetrations and IRs reviewed by the RSC[118] as detailed below before implementing the energy and intensity upgrade:

- Use the same maximum beam fault assumptions (in %) as was done in the RHIC Project analysis. If justified, use other assumptions for specific locations
- Lock and post all accessible areas that potentially could exceed 500 mrem. Allow access only by procedure
- Write an Enhanced Work Plan for the RHIC, and train the personnel. Areas that can exceed 100 mrem in a fault require personnel to wear a TLD
- Design the areas near experimental IRs not to exceed 100 mrem in a beam fault for personnel at ground level. Establish controls for elevated regions in these areas in which the potential for exposure could exceed 100 mrem in a full beam fault. If done, then personnel working at ground level do not require TLDs. The RSC may allow exceptions for areas

[113] D. Beavis, "Scaling Muon Doses from 250 GeV to 300 GeV", May 26, 2011
[114] Minutes of RSC meeting of June 14, 2011
[115] K. Yip is presently working on a detailed Monte Carlo analysis of the muon leakage
[116] D. Beavis Memorandum, "Potential Dose on the RHIC Berm", Dec. 30, 2009
[117] P. Bergh, " CAD Area Monitoring 2010", March 31, 2011
[118] RSC Minutes of August 25, 2009. The 1000 mrem discussed in the minutes has been replaced with 500 mrem

where there is occasional access. Place monitor-TLDs in these areas to register any dose in a beam fault

- Due to occupancy by other BNL groups, review 1005 as a non C-AD building

The caps over the RHIC's collimators and beam dumps prevent rainwater from leaching radionuclides from the soil and transport to the groundwater. The collimator and dumps have removable soil samples to monitor the amount of potential activation of the soil. The injection area also has removable soil samples to monitor the potential soil-activation by injection losses. The monitoring results[119] indicate that the produced Na-22 and tritium in the soil is below the limits that require soil caps.

The C-AD monitors with Chipmunks weak locations typically near occupied areas.[120] C-AD does not interlock detectors because radiation-generated interlocks do not prevent an MCI from occurring. However, the C-AD records the equivalent dose rate and MCR alarms signal operators if a dose rate exceeds the established threshold.

The RCTs monitor residual radioactivity and dose rates in the RHIC Ring just after shutdown. The areas near the beam dumps and collimators have dose rates well within the expectations of the RHIC Project. There has been no contamination from the beam dumps or collimators.

4.13. ERL Shielding Analysis

When the machine is operating at the ERL, a 3.5 to 25 MeV primary electron beam is present. Before interacting at a particular location, the accelerated beam is essentially mono-energetic, consisting of only electrons. If the electrons stop in the accelerator equipment, beam stop, or shielding, then electromagnetic cascades and Bremsstrahlung radiation can occur. For low-energy electrons, 25 MeV or less, the so-called Bremsstrahlung radiation (braking radiation) contributes substantially to energy loss. A decelerating electron or one changing direction emits Bremsstrahlung radiation. The term describes photon radiation emitted by the electrons' decelerations when they pass through the electric field of atomic nuclei. The energy of photon radiation distributes over a wide spectrum of energies up to, and including, the energy of the electron.

Accelerating electrons in a magnetic field also produces photons, termed synchrotron radiation. Synchrotron radiation from the ERL results when the electron beam circulates in the magnetic field of the accelerator ring. This synchrotron radiation has low energy and attenuates in the shielding used for Bremsstrahlung radiation.

When the ERL is operating, ionizing radiation, such as photons and neutrons that penetrate the shielding, dominate the radiation field in occupied areas. Bremsstrahlung photons that interact with the nuclei in the concrete shield produce neutrons. Because the ERL has lower-energy Bremsstrahlung photons, at least in terms of causing nuclear reactions, the dominant neutron-producing mechanism is giant nuclear resonance. Among the best-known example is giant electric dipole (E1) resonance, concentrated in the energy region of 10- to 30-MeV for most nuclei, if not all.[121]

The neutron spectrum from the E1 resonance process is comparable to a fission spectrum, and a Maxwellian distribution of energy suffices for calculating radiation shielding. Shielding is

[119] M. Van Essendelft to D. Beavis. See RSC memos, "Soil Sample Results 2010", April 4, 2011
[120] There are presently 15 chipmunks around the external shield of RHIC
[121] Giant Nuclear Resonance, January 2008

relatively straightforward. The neutron-dose-equivalent tenth-value-layer for ordinary- and heavy-concrete is about 100 g cm^{-2} for this neutron spectrum.[122]

Neutrons can induce radioactivity in the ERL machine's components, cooling water, and nearby equipment. The C-AD expects this neutron activation to be insignificant because the electron energies into the beam dump are well below most neutron-production thresholds. The C-AD RCTs will verify residual radioactivity via radiation surveys near the beam dump when the machine de-energizes, and by sampling and analyzing the cooling water. Radiation controls are in place as required during entry into the ERL following shutdown of the machine for inspection, maintenance, modification, or repair. Because of the insignificant activation at ERL, the C-AD does not expect contamination issues.

The principal radiation hazards at Prototype ERL derive from the flux of the primary electron beam and the machine's duty-cycle. Listed in order of relative importance to health, these hazards include the following ones:

- Potential inadvertent exposure of workers to the primary electron beam or to RF-induced x-rays from the electron gun or 5-cell accelerating cavities. The access controls system and the enclosed beam pipe prevent the exposure of personnel to this beam. The probability of unsafe failure of the access controls system that would allow an overexposure from primary beam or Bremsstrahlung is so low[123] that C-AD does not consider this hazard credible
- Exposure to photon- and neutron- radiation near labyrinths and penetrations
- Exposure to photon- and neutron-radiation that penetrates through the shielding
- Exposure to skyshine radiation; skyshine radiation may extend many tens of meters from this accelerator. The Prototype ERL roof shields are inaccessible during operations via administrative access controls. The concerns here are the dose rates from skyshine in the Prototype ERL Control Room, B966, and B940 due to the expected occupancy of these areas compared to other areas surrounding the ERL. However, the C-AD expects this source will be insignificant during routine beam operations. The C-AD's RCTs will confirm this by undertaking routine radiation surveys, and by placing TLDs around the facility
- Exposure to activated air
- Exposure to potential residual radiation induced in the ERL's components
- Exposure to, or inadvertent release of activated cooling water to the environment

The ERL is an experimental machine that may undergo changes in operations as the C-AD learns more about its operating characteristics. If any of these changes involve a potential change in the radiation hazards, then appropriate work planning and C-AD RSC reviews will take place to ensure that the C-AD meets the requirements of BNL's Radiological Control Manual and satisfies the ASE limits. If C-AD must revise the limits to allow more flexibility in research/operations, the C-AD will submit the proposed ASE changes to the DOE for approval before making the changes.

Table 4.13.a lists the key parameters for calculating dose rate for the ERL. The C-AD provides estimates of the expected dose rates from Prototype ERL operations in Table 4.13.b; C-AD expects the actual dose rate to be less than the computed ones. During commissioning, the RCTs will conduct radiation surveys to validate these estimates. If necessary, the C-AD will

[122] NCRP 144, Radiation Protection for Particle Accelerator Facilities, December 2003

[123] D. Beavis, Failures in the PLC Based Radiation Safety Systems, October 31, 2000; D. Beavis, Frequency of Interlock Testing, November 6, 2000; D. Beavis, Estimation of Time to Loss of Protection-The D-Downstream Gate, November 13, 2000

modify the shielding to ensure that routine and faulted doses, and dose rates are acceptable for full power operation of the Prototype ERL.

Table 4.13.a Parameters of the Prototype ERL in Building 912

	High- Charge Mode	Low- Charge Mode
Injection energy, MeV	3.5	3.5
Maximum beam energy, MeV	25	25
Average beam current, mA	100-200	10-200
Bunch rep-rate, MHz	9.4	9.4-700
Charge per bunch, nC	10 or more	~0.3 -1
Efficiency of current recovery	>99.95%	>99.95%

For shield calculations, the C-AD established the following limitations for the Prototype ERL. C-AD rated power sources for Prototype ERL, 1 MW for the gun and 50 kW for the 5-cell cavity, 20% greater to estimate dose and dose rates. Prototype ERL power sources do not produce this increased power; rather, the C-AD included a safety margin of 1.2 in calculating the dose and dose rate:

- Electron energy limit of 3.5 MeV for the superconducting RF gun
- The power source of the superconducting gun is limited to delivering 1.2 MW of power to the gun
- Electron energy limit of 25 MeV for the ERL ring
- Electron beam power shall not exceed the equivalent of 10 MW of instantaneous power for the electron beam in the Prototype ERL ring
- The power source for the five-cell cavity will be limited to delivering a maximum of 60 kW of power to the cavity
- A beam power of 1.2 MW for the electron beam striking the beam dump

Continuous beam loss in the electron ring is limited via the physics of the Prototype ERL; it vanishes since the ERL does not recover energy to accelerate the next pulse in the train of pulses coming from the electron gun. This self-limiting effect is one peculiarities of an ERL ring. The ERL limits the maximum continuous beam loss to 50 kW, the power restored by the 5-cell cavity power supply.

It is not expected that the entire 3.5 MeV beam at average current on its way to the dump can be lost at any single point for more than a few seconds since machine damage would occur. For radiation protection, the C-AD assumes that the ERL's electron beams produce thick-target Bremsstrahlung in high-Z material, regardless of the target's actual thickness or type. Thick target curves for Bremsstrahlung radiation from NCRP 144 show the 3.5 MeV beam has insufficient energy to create a neutron-dose contribution via the photon-giant-nuclear-resonance process. [124]

The C-AD anticipates routine loss of a small fraction of the 3.5 MeV beam. In normal operations, the collimator's losses dominate the 3.5 MeV beam loss, routinely about 1 micro-amp of beam. One micro-amp continuous 3.5 MeV beam loss translates into a beam power of 0.0035 kW. The collimator is located in the transport between the gun and the first chicane.

[124] NCRP Report No. 144, Radiation Protection for Particle Accelerator Facilities, Figure 3.5

The 3.5 MeV beam is not intended to be transported into the 25 MeV transport ring after the first bend after the superconducting RF cavity. For radiation-safety purposes, interlocks prevent its transport past this magnet.

The electron gun's beam power eventually transports to the beam dump. From Table 4.13.a, the average beam current is 200 milliamps; with of continuous 3.5 MeV beam loss on the dump, this represents a beam power of 700 kW.

The high-energy electron beam, 25 MeV, separates from the low energy 3.5 MeV beam in the chicanes before and after the SRF cavity. A 60 kW maximum sustainable loss is the limit of the SRF's power supply. Since this energy Bremsstrahlung produces giant resonance neutrons, the 25 MeV beam generates the highest neutron yield.

Swanson[125] illustrates the broad features of the radiation field due to the unshielded initial interactions of electrons, showing that Bremsstrahlung radiation dominates the dose. His figure is useful for making crude estimates of the resultant neutron-radiation field. For a 60 kW continuous loss of a 25 MeV electron beam, the neutron-dose equivalents are several orders-of-magnitude less than the dose equivalent from Bremsstrahlung radiation.[126]

Beam-current transformers used in a differential-mode limit beam loss in the ERL ring to protect the machine. The C-AD anticipates this as being a low-loss mode; high loss would cause major equipment damage, quickly terminating the accelerator's operation. However, C-AD does not credit the ERL machine-protection system in reducing dose from a beam-loss event.

The ERL enclosure has side walls composed of between four- and eight-feet of light concrete. The thin sections of wall are shadowed from the potential sources with inner shield walls located appropriately. The entire facility has a single layer of light concrete roof beams four feet thick, except for a transition region where the roof is two layers of beams. This transition region is where the 4.3 m ceiling height in the center falls to 3 m feet at both ends.

The maximum sustained beam loss is 1.2 MW for 3.5 MeV injection electrons and 60 kW for electrons in the 25 MeV ring. The C-AD expects credible routine losses to be 1 W at beam injection and 50 W for the 25 MeV beam. The presence of additional heavy concrete or iron shielding for the electron ring in the cave reduces the Bremsstrahlung dose-rate in the forward direction. This added shielding lowers the 0-degree Bremsstrahlung dose-rates by a factor of at least 0.005. Including this added shielding, the C-AD lists estimates of dose rates at the outside surface of the Prototype ERL's shielding in Table 4.13.b.[127,128, 129]

---

[125] W. P. Swanson, Radiological Safety Aspects Of The Operation Of Electron Linear Accelerators, Technical Report No. 188, International Atomic Energy Agency (IAEA), Vienna, 1979. Adapted in Radiation Physics For Personnel And Environmental Protection, Fermilab Report Tm-1834, Revision 7, April 2004, J. Donald Cossairt, Fermi National Accelerator Laboratory

[126] D. Beavis, Simple Estimate of ERL Radiation, August 1, 2006

[127] Ibid.

[128] D. Beavis, The Effectiveness of a Two-Foot Thick Inner Heavy Concrete Wall, December 11, 2006

[129] Prototype ERL USI, 2008

Table 4.13.b Dose Outside Prototype ERL Enclosure for 3.5- and 25-MeV Electrons

Condition	Instantaneous Dose Rate From Maximum Beam Loss[a]	Dose Rate From Sustainable Loss[b]	Dose From Sustainable Loss Assuming Interlock Occurs[d]
3.5MeV@ 0 degrees, γ	88,000 mrad/h	0.073 mrad/h	0.0002 mrad
3.5MeV@ 90 degrees, γ	18,000 mrad/h	0.015 mrad/h	0.00004 mrad
25 MeV@ 0 degrees, γ	65,000 mrad/h[c]	4000 mrad/h[c]	10 mrad[c]
25 MeV @ 90 degrees, γ	13,000 mrad/h	800 mrad/h	2.0 mrad
25 MeV neutrons	120 mrem/h	6.0 mrem/h	0.015 mrem

[a] The maximum instantaneous beam loss is 1.2 MW at 3.5 MeV, and 10 MW at 25 MeV, which would terminate after a small fraction of a second.
[b] The sustainable loss is 1 W for 3.5 MeV, and 60 kW for 25 MeV electrons is assumed.
[c] The forward-direction gamma-dose rates were reduced by a factor of 0.005 by the adding 2-feet of heavy concrete in the electron ring.
[d] As with all C-AD interlocking area-dose-rate monitors, a 9-second delay from sensing the trip point's dose rate to stopping of beam is conservatively assumed in SAD analyses.

The electron gun and the 5-cell accelerating cavity will generate x-rays from field emission of wall-surface electrons with dose rates similar to those in the RHIC's RF cavities. Comparing this source to the routine electron-beam loss shows that the x-ray dose rates at the outside surface of the Prototype ERL cave shielding are insignificant relative to Bremsstrahlung.

The C-AD used the Monte Carlo Neutron Photon Transport Computer Code (MCNPX) to estimate the dose rates from skyshine in normally occupied areas during ERL operations. Table 4.13.c lists the results for an assumed maximum sustainable loss of 60 kW and for a more realistic but conservative loss of 50 W, assuming that the Chipmunks interlock the beam at the RSC's determined set point. The Prototype ERL expects to run only about 25% of a year. Using this occupancy with the expected sustainable loss of 50 W, there is an annual dose of about 40 mrem to an individual in the ERL control room.

Table 4.13.c Skyshine Dose-Rate Estimates From 25 MeV Beam Loss[130]

Occupied Location	Maximum sustainable loss (60 kW of 25 MeV electron beam)	Conservative sustainable loss (50 W of 25 MeV electron beam)	Maximum dose with 60 kW loss assuming Chipmunk Trips Beam
ERL Control Room	98 mrem/h	0.082 mrem/h	0.25 mrem
Building 966	26 mrem/h	0.022 mrem/h	0.07 mrem
Building 940	4.0 mrem/h	0.0033 mrem/h	0.01 mrem

The C-AD based the Klystron room shielding on the operation of a similar Klystron at Los Alamos with a 1/8 inch lead "garage" over it. The ERL Klystron operates at an upper voltage of ~92 kV. For 150 kV, the 1/8 inch of lead is equivalent to 1.6 inches of steel.[131] Based on this computation, and radiation measurements made at the manufacturer's facility, the C-AD designed the Klystron room equivalent to a box with a wall thickness of 2 inches of steel. There are penetrations in the back wall for utilities and the wave-guide; C-AD shielded them with steel and lead to prevent x-rays from directly shining out.

Dose estimates for the penetrations, which are order-of-magnitude ones, combine simple source terms and estimates of the attenuation of the radiation as it propagates through the opening.[132] The C-AD uses conservative assumptions so that the estimates represent upper limits for potential dose rates. The ERL's low-intensity fault studies for the RF-gun, five-cell cavity, and transport of the low- energy and high-energy electron beams will verify the source terms, and radiation transport through the shielding and penetrations.

There are approximately 20 penetrations through the Prototype ERL's external shielding, two allowing access of personnel and equipment. Several penetrations are buss blocks containing several dozen small penetrations for access of utilities. Others are for electrical cables, cryogens, gas exhaust, laser beam, and the like.

Dose rates during fault conditions typically are many orders-of-magnitude larger than that under normal operating conditions. ERL workers do not occupy the areas around the penetrations and RCTs posts penetrations for localized elevated dose-rates. The safety analyses for penetrations focus on dose to personnel during a faulted beam, as opposed to dose from normal operations.

RCTs post all areas near the Prototype ERL shielding at least as a Radiation Area during operations. Chipmunk radiation monitors detect large dose rates at penetrations caused by fault conditions. The Chipmunks couple with the interlock system and terminate the radiation in 1- to 9-seconds depending on the level of radiation at the detector. The C-AD assumed a delay of 9 seconds for estimating the dose from fault conditions.

The four sources of radiation in the area are the injector, beam losses of the 3.5 MeV electron-beam, the five-cell cavity, and beam losses of the 25 MeV electron beam. The source terms used are conservative.

[130] Email from K. Yip to R. Karol dated January 29, 2008, Skyshine
[131] NBS Handbook 50
[132] D. Beavis, Dose Rate Estimates for ERL Penetrations, March 26, 2008

The injector and the five-cell cavity can generate copious x-rays. The C-AD did not model them in terms of their x-ray generation, but used experience from other similar systems at the C-AD. The conditioning of these RF cavities will cause the largest generation of x-rays. The C-AD expects the superconducting five-cell cavity to absorb 100- to 1000-watts from field-emission electrons crashing into the walls of the cavity before boiling off too much helium and forcing the superconducting cavity to a higher temperature, which eliminates the accelerating RF field. The C-AD expects the voltage difference that the field-emission electrons cross to be not more than the gradient of a single cavity, 5 MV. Only a few electrons accelerate across several cavities. The C-AD assumed that all the electrons are at 3.5 MeV with a maximum conditioning loss of 250 W, and assumed the routine loss to be less than 10 W for the five-cell cavities. The C-AD assumed the injector has this same characteristic. C-AD used previous methods[133] to estimate the 90-degree radiation, using thick-target formulas. The assessed unshielded dose rates during conditioning are 2000-rem/h at 1 m and, for normal operations, 80-rem/h at 1 m. The C-AD concludes the shielding used to protect against Bremsstrahlung radiation from electron beam losses in the ERL Ring is adequate also to protect against the x-ray source.

The C-AD estimated the absorbed dose from full 25 MeV electron beam loss in the near-zero degree direction to be 10,800 rad/h at 3 m with 0.7 m of heavy concrete between the source and the point of interest with a 60 kW loss.[134] They used this value in determining locations where an inner shield wall acts as a shadow for the 25 MeV beam losses in the ring.

The maximum sustainable 25 MeV beam loss that the 5-cell cavity can support is 60 kW. According to the machine's designers, the realistic maximum local loss is between 10- and 100-W before beam loss damages the machine and accelerator shuts down. The ERL has machine-protection devices to limit losses to avoid damaging equipment. Thus, C-AD assumes the 60 kW loss is conservative, and expects routine losses of 25 MeV electron beam to be less than 10 W.

The 3.5 MeV beam has a power limit of 1.2 MW that normally is deposited in the water-cooled, locally shielded beam dump. Again, the C-AD does not expect the machine to survive a large beam loss at any location, except at the beam dump. The C-AD heavily shielded beam dump internally in the ERL enclosure, and does not consider radiation from the dump in the penetration evaluations.

An arbitrary 1 kW of a 3.5 MeV electron beam was assumed for the penetration analysis. The C-AD expects a routine loss of 10 W or less. The RSC will review any routine loss higher than this, based on daily radiation surveys, and will indicate the need for additional shielding.

The following table (Table 4.13.d) summarizes the calculations for each penetration for gamma rays and neutrons. The maximum neutrons can come from a different source location than the gamma rays. In all cases, the maximum gamma dose rates are from the 25 MeV electron-beam losses.

[133] D. Beavis, "Simple Estimates of ERL Radiation", August 9, 2008
[134] D. Beavis, "The Effectiveness of a Two-Foot Thick Inner Concrete Wall", December 11, 2006, Fig.1

Table 4.13.d Estimated Maximum Dose Rates and Fault Dose to Worker Near Penetrations

Penetration	Maximum Gamma Dose Rate (rem/h)	Maximum Neutron Dose Rate (rem/h)	Maximum Dose with Interlock (mrem)[8]
Laser port	2.5	0.024	6.3
1 MW Waveguide	50	0.48	130
Cryo Ports (5)	10 [1]	2.4 [1]	31
North Gate	0.31	2.2	6.3
North Labyrinth Buss Block	4.8 [2]	0.12	12
South Gate	59 [3]	0.19	150
Port in South Labyrinth (2)	72 [4]	0.72	180
West Trench	7.2	0.12	18
East Trench	2.4	1.9	11
South labyrinth buss block	0.12	0.36	1.2
ODH Vent	12 [5]	4.8 [5]	4.2
Lifting Fixture holes (4)	1.7 [6]	0.010 [6]	4.3
50 kW waveguide	34 [7]	1.2 [7]	88

[1] C-AD assumes that steel attenuates the gamma ray dose by a factor of 10.
[2] This is directly outside the buss block, and may be in a fenced area.
[3] A shield block in the ring center would substantially reduce this dose rate.
[4] This is at the port exit, which may be located in a fenced area. The C-AD may pack the port in the future. This value is for the port with the highest dose rate of the two.
[5] This is on the roof, and C-AD does not allow access during operations.
[6] The C-AD evaluated at the edge of the shielding and not on the roof.
[7] The penetrations for the cable ports, water pipes, and the 50 kW waveguide are in a separate note.[135] The dose rates presented here are at 4 m above the floor.
[8] C-AD uses barriers to prevent access to penetrations greater than 20-mrem fault dose. The C-AD will add shielding and barriers based on fault studies to reduce the fault dose below 20 mrem.

All the dose rates in the Table 4.13.d are sufficiently low such that with appropriately placed Chipmunk monitors to terminate the beam on large beam losses, the exposure to personnel is less than 10 mrem from a fault. Where the instantaneous fault dose rate exceeds 50-rem/h at a penetration opening, C-AD installs dual failsafe Chipmunks. Fault studies by the RSC will evaluate the need for added shielding at ERL.

Toxic gasses produced by ionizing radiation inside the ERL enclosure shows that ozone is among the most toxic, and quantities that exceed the ACGIH Threshold Limit Value (TLV) level of 0.1 ppm are possible. The TLV is the maximum allowed concentration for workers exposed 8 hours per day, 5 days a week. C-AD expects local concentrations of ozone at the location of the highest Bremsstrahlung radiation doses to air. No locations exist in the ERL where electrons traverse air; the C-AD only considers the radiation energy imparted by the Bremsstrahlung in the analysis. The C-AD used the model for ozone production in Swanson's paper.[136]

[135] D. Beavis, "Estimate of the Radiation Exiting Penetrations for the ERL 50 kW Waveguide, Cable Buss Block, and Water Pipes", Dec. 6, 2006

[136] W. P. Swanson, Toxic Gas Production at Electron Linear Accelerators, SLAC-PUB-2470, February 1980

The highest power level in the Prototype ERL is the energy deposited in the beam dump, viz., 1.2 MW of 3.5 MeV electrons. For an uncollimated Bremsstrahlung beam from an optimum high-Z target, the production rate of ozone, P in liters per minute, is

$$P = 1.7\text{x}10^{-4}\ L\Omega$$

Where
L = meters of air
Ω = kW of electron beam power, 1200 kW for the beam dump

Enclosing the beam dump is a 0.3 m lead shield with, at most, ~0.15 m of air that the Bremsstrahlung beam passes through before encountering shielding. The actual air passage is much less. Using these conservative assumptions yields an ozone-production rate of 0.03 L/m.

As indicated by Swanson, the mean life of ozone in air at room temperature, T, is 50 minutes for a radiation environment. The C-AD ignores any natural ventilation in the ERL enclosure. The calculated saturated concentration of ozone, C_{sat}, is

$$C_{sat} = PT/V$$

The 0.15 m air size around the dump is about a 200 L volume since the dump is 1.5 m long x 0.45 m in diameter. C_{sat} for that air-gap between the dump and lead shield is $7.5\text{x}10^3$ ppm. Assuming the air in the gap exchanges with cave air (V of 570,000 L), then saturation concentration lowers to 3 ppm, well above the TLV limit.

Based upon this calculation, the C-AD will enclose the beam dump in a tight structure maintained free of air using an inert gas such as helium; alternatively, C-AD will vent the air space between the dump and the lead shield to outside the cave into Building 912 where the ozone can significantly dilute to safe levels. The C-AD will make ozone measurements during ERL commissioning to determine the actual magnitude of the ozone problem, and to optimize a solution.

The credible sustainable losses of the electron beam are 1 W for the 3.5 MeV electrons, and 50 W for the 25 MeV electrons. The length of air until the uncollimated Bremsstrahlung beam reaches shielding is no greater than 4 meters. Assuming that the ozone produced by these losses continuous, and reaches saturation in the ERL cave, then the ozone concentration is 0.0003 ppm for the 3.5 MeV beam loss and 0.01 ppm for the 25 MeV beam loss. Thus, there are no unsafe ozone hazards from routine electron-beam losses.

4.14. Induced Residual Activity

The radionuclide content of induced residual activity is similar at all C-AD accelerators and experiments, but differences in the beams' intensities and durations create differences in the level of residual radioactivity in any specific component. The radionuclides produced are proton rich due to neutrons evaporating off excited nuclei following high-energy ion-nucleus and particle-nucleus interactions, or following pn, p2n, pD and pT reactions. High-intensity high-energy proton beams at the Linac, BLIP and AGS produce the maximum levels of induced radioactivity.

Losses from high-energy particles (>20 MeV) and lower energy deuterons can initiate nuclear reactions in beam pipes, magnets, extraction septa, shielding, RF devices, targets, dumps, beam scrapers, vacuum- sectionalizing valves, and the like. These interactions produce secondary particles, such as neutrons, protons, and pions. At each interaction point, the nuclei of atoms struck by the high-energy primary or secondary particles fragment, generating a range of lower mass nuclei, some of which are radioactive.

The materials used in constructing the C-AD accelerator and accelerator's experimental facilities are limited in number, the most important being iron, steel, copper, aluminum, concrete, oil, and plastic. Generally, the C-AD does not use metals and materials in their pure form; that is, they have welds, or they are alloys, or they are parts of beam-line components. Thus, irradiation produces a variety of radionuclides in any given item. Because they are proton rich, these radionuclides are above or on the element stability line. They predominantly decay by the positron and electron capture decay modes, which is different from the decay modes for radioactive materials produced in a nuclear reactor. This difference makes accelerator activation products easily distinguishable from reactor produced radioactive materials. Based on studies on the AGS radioactive waste stream, accelerator beam losses in these materials induce radionuclides ranging in half-lives of a few seconds to tens of years. See Table 4.14.a for the list of radionuclides in the accelerators that have half-lives longer than a few hours.

Table 4.14.a Summary of the AGS Radionuclide Production

Predominate Irradiated Material	Nuclide
Plastic, Oil	^{7}Be, ^{22}Na, ^{46}Sc, ^{54}Mn, ^{57}Co, ^{60}Co, ^{68}Ga, ^{88}Zr, ^{113}Sn, ^{124}Sb, ^{125}Sb, ^{133}Ba, ^{134}Cs, ^{207}Bi
Concrete	^{7}Be, ^{22}Na, ^{46}Sc, ^{54}Mn, ^{57}Co,^{58}Co, ^{60}Co, ^{65}Zn, ^{110}Ag, ^{134}Cs
Aluminum	^{7}Be, ^{22}Na, ^{54}Mn, ^{57}Co,^{58}Co, ^{60}Co, ^{65}Zn, ^{68}Ga, ^{95}Nb, ^{110}Ag, ^{33}Ba, ^{134}Cs
Iron, Steel	^{7}Be, ^{22}Na, ^{46}Sc, ^{54}Mn, ^{59}Fe, ^{56}Co, ^{57}Co, ^{60}Co,^{65}Zn, ^{68}Ga, ^{75}Se, ^{95}Nb,
Copper	^{7}Be, ^{22}Na, ^{54}Mn, ^{57}Co,^{58}Co, ^{60}Co, ^{65}Zn, ^{68}Ga, ^{110}Ag, ^{133}Ba, ^{134}Cs

A study of beam loss and activation at the AGS during high-intensity running provided a prescription to predict activation and the resultant exposure rate at particular locations in the AGS Ring.[137] In 1990, the residual exposure rate varied around the AGS Ring from values of 5 mR/h to 5 R/h. These levels no longer exist due to radioactive decay, and the replacement of equipment. The study indicated that the exposure rate falls off according to the following relationship:

$$X = 4.1\text{x}10^{-14}\ E^{1.2}\ P\ \ln(1 + T/\tau)$$

Where
X = exposure rate at 30 cm, mR/h
E = proton energy, GeV
P = proton loss rate, p/h
T = irradiation time, h

[137] K. Brown, "Beam Loss and Induced Activation in the AGS," Accelerator Division Technical Note 337 (April 9, 1990)

τ = cool down time, h

The last significant high-intensity run in AGS was in 2002. Table 4.14.b shows the residual 2011 levels from that run based on the decay equation from the 1990 study. The C-AD completed other low-intensity runs between 2002 and 2011, and the C-AD's RCTs mapped the exposure rate in the AGS Ring after each of them. These other runs did not have a large impact on the residual dose rate. If work planning for a job in the AGS Ring shows that the expected accumulated dose exceeds the C-AD's administrative limit, then the C-AD's ALARA Committee reviews the work to see if further actions can lower worker doses before the work can begin. This process has served the C-AD well over the last 20 years in lowering the total doses to workers to a fraction of those received in the past.

Table 4.14.b Locations of High-Intensity Beam Loss in the AGS, and Activation Levels (R/h)

Main Loss Locations in AGS Ring	Exposure Rate at 30 cm After 1 Day Cool down (2002)	Exposure Rate at 30 cm After 1 Month Cool down (2002)	Exposure Rate at 30 cm After 9 Year Cool down (2011)
Injection Region (L20)	5.8	2.1	0.04
Dump/Scraper Region (J10)	62	22	0.46

A beam dump/scraper about 2 m long at J10 catches 80 to 90% of the beam loss that occurs during acceleration and extraction. The remaining loss spreads over 7 to 8 magnets downstream. The L20 septum magnet catches most of the injection losses. In addition to absorbing the acceleration and extraction losses, the dump/scraper affords a place to deposit beams not injected into the experimental areas, such as during AGS studies.

To reduce levels near the J10's dump/scraper, the C-AD placed a shield around the dump that also lowers soil activation outside the tunnel. To eliminate the exposure-rate hazard from residual radiation levels in the dump and shield, the C-AD adds a temporary rolling shield during shutdown to help eliminate this source of radiation exposure to nearby workers.

The C-AD's "as low as reasonably achievable strategy" since 1973 has been as follows:

- Schedule maintenance for longest cool down time
- Better the reliability of vacuum system
- Improve the reliability of beam line components
- Keep a history of the equipment's malfunctions
- Improve methods of injection, acceleration, and extraction
- Modify shielding near the trenches, columns, and penetrations
- Install quick disconnects on vacuum systems and magnets, water pipes, and power cables
- Develop radiation-hardened equipment
- Use closely coupled shielding to reduce secondary radiation near targets
- Establish guidelines for area access, based on radiation level
- Train staff on mock-up equipment
- Design shielding blocks for quick removal and re-insertion
- Use remote areas for storing hot equipment
- Compile and assess personnel-exposure data

- Institute system for radiation-work permits
- Employ complete magnet assemblies for quick replacement
- Simplify target alignment and storage
- Use self-aligning magnet stands to simplify surveying
- Lower density of beam-line components to reduce serviceability problems
- Use remote test points to trouble-shoot magnets
- Increase the number of radiation-monitoring points
- Assure computer integration of radiation monitoring system

During the current heavy-ion and low- intensity polarized proton running periods, activation is at least an order-of-magnitude lower than during the historical high-intensity proton periods.

Thomas Jefferson National Laboratory reports that they create 10.1-day Nb-92m in niobium accelerating cavities following the interaction of field emission electrons that have energy greater than 6 to 7 MeV. Thus, activation can occur in niobium RF cavity walls even though the cavity never accelerates electron or ion beams in an accelerator; that is, activation of RF cavities may occur during the RF cavity testing phase provided the RF field gradient is 6 to 7 MV or greater. To ensure workers handle these potential radioactive materials safely, C-AD RCTs measure niobium cavities for induced radioactivity after RF testing, and C-AD treats the niobium cavity as radioactive material when appropriate.

4.14.1.Activated Cooling Water

Wherever accelerator beams activate water inside cooling loops or cooling pipes, the C-AD closes or significantly limits radioactive off-gasses from the cooling-water system. A closed system brings water in direct contact with the beam-line equipment or material, such as a magnet, beam dump, or a target, and primary beam hadrons or secondary ones irradiate the cooling water directly producing radioactivity, some of which is gaseous, in the closed cooling-water system. Table 4.14.c lists the long-lived radionuclides measured in water in these systems. Cooling towers, which cool closed-loop systems through heat exchangers, do not have measurable radioactivity above the minimum detectable level (MDL).

In addition to directly activating water, small amounts of radioactivity induced in the magnet materials become corrosion products and transfer to the cooling water. The current AGS water systems, when integrated over the volume of water, contain μCi amounts of radionuclides, such as ^{54}Mn, ^{22}Na, and ^{65}Zn. Only one system contains mCi amounts of tritium. On the other hand, activated cooling water is in closed de-ionized re-circulating systems, thereby greatly reducing the amount of dissolved and suspended radioactive corrosion products. These de-ionizing systems do not remove tritium.

Activating beams create tritium radionuclides in water along with gamma emitting radionuclides, so an on-line gamma detector suffices to monitor the liquid effluent for tritium too. Because tritium only emits a low-energy beta particle, C-AD sends water samples for analyses at an off-site laboratory. During an inadvertent release, on-line gamma-radiation monitors in the sanitary waste-system trigger the diversion of radioactive water away from the BNL Sewage Treatment Plant, and toward a lined hold-up pond for additional sampling and treatment.

Cooling water, especially at the BLIP, also contains small amounts of the short-lived radio-gases, ^{15}O and ^{13}N. The external radiation hazard from circulating these radio-gases with cooling water is momentary, lasting 5- to 10-minutes after shutting down the beam.

Table 4.14.c Typical Radioactivity Concentrations in the C-AD's Closed Cooling-Water Systems
(All systems sampled on the same date, 06/17/2010. MDL = Minimum Detectable Level, ~ 300 pCi/L for tritium.)

Water Systems Name	Location	Tritium Concentration, pCi/L	Other Nuclides, pCi/L
Main Magnet Water Systems	911, 928	57,000	<MDL
Fast Quad System	TE Bldg. 951	2210	<MDL
RF Cavity System	928, 913	105,000	<MDL
SEM System	912, 913, 912A	1270	<MDL
LINAC Transport System	930 HEBT	11,800	<MDL
Beam Stop (BLIP System)	946, 914	1,360,000	^{7}Be - 1910
Booster Magnet Water System	913, 914	123,000	<MDL
Booster RF Cavity System	914	86,400	<MDL
Chilled Water System	911,913, 914	15,300	<MDL
RF-PA Cooling System TE Building	951, 913	172,000	^{7}Be - 235
Multipole Cooling System	911	<MDL	<MDL
H-10 Cooling System	H-10	<MDL	^{7}Be - 101
B944 Test System	944, 902	<MDL	<MDL
RFMG Rectifier System	928	250	<MDL
RF Power System / F-10	928	<MDL	<MDL
RFMG Choke	928	<MDL	<MDL
RFMG Chilled Water System	928	<MDL	<MDL
LINAC RF System	930	380	<MDL
LINAC 10th Station	930	<MDL	<MDL
LINAC OPUS	930	260	<MDL
LINAC Cavity System (1)	930	3140	<MDL
LINAC Cavity System (2)	930	56,700	^{22}Na - 25.7
LINAC Cavity System (3)	930	13,300	^{22}Na – 48, ^{154}Eu - 102
LINAC Cavity System (4)	930	60,300	^{154}Eu – 303, ^{22}Na - 176
LINAC Cavity System (5)	930	97,700	^{154}Eu – 268, ^{22}Na - 142
LINAC Chilled Water System	930	<MDL	<MDL
B925 Test System	925	4110	<MDL
NSRL Main Magnet Cooling System	957	950	<MDL
NSRL Power Supply Cooling system	957, 930A	<MDL	<MDL
Tandem	901A	<MDL	<MDL
Tandem CW	901A	<MDL	<MDL
RHIC Injection System (ATR)	1000P	1240	<MDL
RHIC RF PA Cooling System	1004A	<MDL	<MDL
RHIC Cavity Cooling System	1004A	600	<MDL
STAR Magnet Cooling System	1006A	<MDL	<MDL
STAR MCW System	1006A	<MDL	<MDL
STAR PS Cooling System	1006A	<MDL	<MDL
TPC Cooling System	1006A	<MDL	<MDL
PHENIX Magnet Cooling System	1008C	<MDL	<MDL
PHENIX PS Cooling System	1008C	186	<MDL
RHIC Spin Cooling System	1010	<MDL	<MDL

Jet Target Cooling System	1012A	<MDL	<MDL
EBIS Cooling	930B	<MDL	<MDL
E-Cooling	912	-	-
RHIC Fire Standpipe System	RHIC Ring	<MDL	^{134}Cs - 4.8

The AGS's practice is to monitor closed system- or contact-cooling water before discharge; planned releases of cooling water follows the receipt of analytical data showing acceptable levels for all radionuclides. Additionally, the C-AD monitors the content of metals in both contact- and secondary-cooling waters. The practice and follow-up actions for contact waters are as follows:

- Monitor for radioactivity and metals
- Transport to C-AD's storage tanker trailers at Building 974 for treatment by evaporation, or to BNL's Environmental- and Waste-Management Services Division if the radiation level is higher than allowable for direct discharge into the sanitary-waste system
- Process metals "in-line" if their levels are high
- Discharge to the sewage-treatment plant if the water meets all aspects of the State's pollution-discharge elimination system permit
- Contract a waste disposal facility when all else fails

Regarding hazards from activated animal waste for NSRL; C-AD assumes an animal sample receives a near lethal dose of 500 rad (5 Gy) from 1 GeV/nucleon iron ions. This corresponds to $4x10^8$ iron-ions for a 20 cm^2 beam-size, or $2.3x10^{10}$ nucleons at 1 GeV. For soft tissues, water comprises about 80% of mass. C-AD assumes a sample is made of water, presents a 20 cm^2 area to the beam and is 20 cm long. Given a 30 millibarn (mb) cross-section for tritium production from high-energy nucleon-collisions with oxygen, the total tritium created in a sample from a 500 rad dose is 22 pCi. Thus, C-AD considers activated excreta of animals not measurable nor a significant radioactive hazard.

C-AD transfers radioactive water drained or collected from the various radioactive cooling water systems to one of three 7000-gallon tanker trailers located at Building 974. The stainless steel tankers sit inside a Suffolk County Article 12 registered secondary containment.

Steam heat to the tankers heats the water to prevent freezing in the winter and to evaporate the water throughout the year. The vapor contains low levels of tritium oxide from the activated cooling water systems. C-AD requested a NESHAPs Assessment for this air release. This evaluation assumed C-AD evaporated 25,000 gallons of tritiated water each year.[138] ESH Directorate computed the release to cause an insignificant annual dose to the offsite maximally exposed individual of the public, MEI, of 0.0000864 mrem. This release has no adverse public or environmental effects. C-AD evaluated water-tanker evaporation dose to workers and determined it is insignificant.[139]

4.14.2. Soil Activation and Groundwater Contamination

C-AD described the technique for estimating groundwater activation in prior C-AD SADs. For each significant beam loss location, C-AD estimated the time-averaged transport of ^{3}H and ^{22}Na concentrations from the position of their creation in soil to the water table by the leaching action of rainwater. BNL requires the leachate concentration to be less than 5% of the

[138] Memorandum from B. Hooda to P. Lang, dated June 25, 2001
[139] R. Karol, Radiation Hazards From C-A Water Tanker Tritiated Water Evaporation, March 6, 2002

drinking water standard for ^{3}H and 25 % for ^{22}Na as per the BNL Subject Area on Accelerator Safety[140] including BNL management approval of Internal Waiver 2010-4.[141] If C-AD cannot satisfy these BNL limits, then BNL requires impermeable caps to cover the soil unless BNL management approves otherwise. These caps act like umbrellas to prevent leaching of the radionuclides from the soil to the water table.

Based on studies,[142] ^{22}Na does not leach out of the soil as readily as ^{3}H, and migrates at a much slower rate than the aquifer ground water flow-rate. Because of retarded flow rate for ^{22}Na relative to the ground water flow, ^{22}Na is not a concern in on-site and off-site drinking water. Groundwater at the BNL site flows at about 23 cm per day and ^{22}Na movement is less than 12 cm per day.[143] Unlike ^{3}H, which migrates long distances at groundwater velocity, retardation, radioactive decay and dispersion act to limit the extent of ^{22}Na migration to the area immediately adjacent to the beam loss location. Therefore, there is little chance of any impact to any BNL drinking water well or any offsite receptors.

The quantity calculated to determine the soil radionuclide content is the CASIM "star density" or inelastic collision density. This is the interaction density of hadrons above about 47 MeV. Calculations have shown that approximately 0.075 ^{3}H and 0.02 ^{22}Na atoms are created per CASIM star, adjusted to a 20 MeV threshold. Simulations of beam loss using MCNPX give similar results.

Summaries of known beam loss locations and groundwater contamination issues at C-AD facilities have been written.[144,145,146] Based upon the groundwater flow direction, soil pore velocity, and dispersion, it would take greater than 20 years for any contaminated groundwater to reach the BNL southern boundary, and thus there are no possible adverse health effects to the public. C-AD operations could contaminate onsite potable water supply wells within a period of years following groundwater contamination, but there is a large number of groundwater monitoring wells positioned to monitor C-AD facilities. This active ground water surveillance program allows for rapid detection of a problem and quick response to stop the source. Furthermore, BNL is controlling the pumping of the most vulnerable supply wells onsite to prevent drawing contaminants toward them (e.g., supply well #10 located east of the AGS experimental areas).

Groundwater contamination is an environmental issue related to the BNL EMS program where C-AD commits to protect natural resources. Due to cap installation and groundwater monitoring, groundwater is not a health issue to workers, onsite personnel or the public.

---

[140] Accelerator Safety Subject Area, Design Practice for Known Beam Loss Locations

[141] Brookhaven National Laboratory Internal Waiver Request and Approval 2010-4, approved 2-25-2010

[142] P. J. Gollon, N. Rohrig, M.G. Hauptman. K. McIntyre, R, Miltenberger, J. Naidu, Production of Radioactivity in Local Soil at AGS Fast Neutrino Beam, Informal Report, BNL 43558, October 1989

[143] Brookhaven National Laboratory, Site Environmental Monitoring Report, Chapter 7, Groundwater Protection, 2000

[144] Memorandum for D. Lowenstein and E. Lessard to P. Paul, Beam Stops and Other Sources of Soil Activation at the AGS Complex, August 7, 1998

[145] Investigation of the Tritium Release at Location Upgradient of BNL Well 054-067, December 10, 1999

[146] Brookhaven National Laboratory g-2 Tritium Plume – AOC 16T Record of Decision, April 6, 2007

4.15. Radiation Hazards at BLIP and RRPL

The BLIP facility includes a number of potential radiation hazards for operations personnel who enter the building. The potential impact on other BNL personnel, off site individuals and the environment is very low. However, C-AD considers ionizing radiation at the BLIP a non-standard industrial hazard. C-AD establishes specific Credited Controls for the ionizing radiation at BLIP and describes them in this SAD.

4.15.1. Prompt Radiation Hazards at BLIP

Although there is prompt radiation present in the BLIP building, during routine operations, the dose rates are less than 5 mrem/h at the top of the shield tank. The dose rate falls off rapidly away from the location of the tank. At the building walls, the level is very low and, outside the building, presents no hazard.

The primary concern with respect to prompt radiation safety within the facility is protection against fast neutrons. Fast neutrons form by the direct interaction of the Linac proton beam with BLIP target nuclei. The area outside the BLIP tank is back-filled soil acting as a radiation shield. BLIP operators filled the BLIP tank with sand except for two vertical tubes. One tube, for inspection, has concrete plugs as a radiation shield. The other tube contains the target mechanisms and it comes up into the Hot Cell. BLIP adequately shielded the Hot Cell for any radiation coming up the target tube. BLIP filled the target tube with water, which serves as shielding, but some neutron flux propagates up the target tube and scatters out sideways through the sand shielding. To reduce this neutron source, BLIP installed the equivalent of 30 cm of solid steel, in the form of 45 cm of steel shot with 30 cm of polyethylene beads above it, around the outside of the target tube, ten feet below the top of the sand layer. BLIP refilled the remaining 2.7 m with sand. BLIP based this design on Monte Carlo neutron propagation calculations.[147] After the upgrade was completed, surveys of the area, under operating conditions, were made to verify the adequacy of the shielding, which showed neutron dose rates at all survey locations of less than 0.1 mrem/h. Periodic routine surveys verify that continues to be the case.

C-AD designated the BLIP shielding as a Credited Control. C-AD designed BLIP shield to reduce to safe levels the prompt radiation that results from interaction of 200 MeV protons up to 250 μA, which is the maximum energy and maximum intensity beam. C-AD coordinates significant changes to Linac beam characteristics through C-AD RSC reviews.

4.15.2. Radioactive Materials Hazards at BLIP

Radioactive materials are present in the BLIP Hot Cell. The BLIP Hot Cell operations use approved operating procedures. Inside the Hot Cell, BLIP operators load un-irradiated targets into the transport mechanism and lower them by a motor driven chain drive into the target tube. BLIP operators remove irradiated targets from the chain drive inside the Hot Cell for remote loading into the transport cask, and later transport to the Hot Laboratory in B801 for processing.

BLIP operators control targets (materials, number, size, design) and their irradiation program (time in beam and beam parameters) to maintain compliance with BNL radiological control limits. If radiological dose or exposure values are elevated within the facility, operators return irradiated targets to the shielded shaft to allow additional decay.

---

[147] Monte Carlo Neutron Shielding Calculations, prepared by H. Ludewig & M. Todosow, May 1995

BLIP shielded the Hot Cell to maintain a safe working area for an operator using the manipulator. BNL's RCD checked shielding calculations, using MicroShield, for targets irradiated at maximum BLIP intensity.[148] BLIP constructed the Hot Cell with 1.2 cm steel panels filled with 15 cm of lead, and 36 cm of lead glass shielding and lead collars at certain points. The radiation levels are generally below 5 mrem/h. Localized hot spots up to 25 mrem/h exist and RCD posts to warn staff.

Each of the Hot Cell doors interlocks to an alarm indicating an open door. The alarm triggers a beam interrupt and sends a notice to the MCR. The doors are also under a dual independent padlock system with one lock controlled by BNL's Facility Support Services (FSS) and the other by BLIP workers.

There is activation of parts of the BLIP tank and the target drive assembly nearest the beam interaction zone, but there is no exposure to personnel. Operators can dismantle the target drive assembly for repair and bring it into the shielded Hot Cell.

Exhaust ventilation of the Hot Cell creates a negative pressure in the cell. This ensures that airborne radioactive gases or particulates will not leak into the room. Gases vent up the Building 931 stack. If the airflow falls below the set point for safe operation, an alarm sounds and interlocks interrupt beam. The possibility exists that wind forces may create a positive pressure in the cell, potentially transferring contamination from the cell into the room. In this event, the Continuous Air Monitoring (CAM) detectors alarm to warn personnel who may be in the room, send an alarm to the MCR and trigger a beam interrupt. Under these circumstances, personnel exit the room.

4.15.3.MCI for BLIP

The MCI for the BLIP facility is inadvertent exposure to irradiated targets in the Hot Cell. While there are other accident scenarios that appear to produce potentially higher exposures to prompt beam radiation, they require simultaneous failure of multiple hard-wired interlocks. The coincident combination of those failure events are possible but not credible, as compared to the inadvertent exposure to unshielded targets, which could occur due to human acts/errors, and hence is credible. The physical opening of the Hot Cell door or the target transfer porthole when the cell contains multiple high level sources could result in exposure levels as high as 500 rad/h. While alarms sound when the door opens, there is still the potential for some time to pass before the door is resealed, terminating all exposure. Operators open the heavily shielded door manually. It is well balanced and operators can fully close it within 10 seconds.

Assuming 500 rad/h exposure rate, 10 seconds to open the door, 10 seconds to realize the alarms all going off are due to the presence of high radiation from the Hot Cell, and 10 seconds to close the door; creates a maximal exposure time of 30 seconds and a potential dose to the primary individual of 4 rem. The dose would be less if the individual immediately exited the building at the sounding of the alarm.

In addition to requiring controlled keys for the Hot Cell doors from both FSS and the BLIP staff, radiation monitors in the room would immediately alarm if the Hot Cell door opens

[148] MicroShield Radiation Shielding Calculations, prepared by K. Kolsky, Reviewed by H. Kahnhauser (RCD)

with sources present inside. Operators perform Hot Cell door openings under an RWP that requires RCT coverage, wearing alarming personal dosimeters and using an operable radiation survey meter.

4.15.4. Monitoring of, and Access to BLIP Radiation Hazards

BLIP installed monitoring- and detecting-devices in areas where prompt- or residual-radiation may be present. A BLIP facility's ionization chamber indicates the radiation level in the Hot Cell. A high reading on the monitor alarms and activates the Fast Beam Interrupt (FBI) system at the Linac. To prevent unauthorized personnel entering the pits or the Hot Cell, operators padlock the pit covers, and the Hot Cell's doors. The keys are under administrative control. Access to either of them for maintenance is covered by both Radiation Work Permits, and operating procedures.

Adjacent to the Hot Cell in room 931B, where BLIP expects the ambient radiation levels to personnel to be the highest, another ionization chamber monitors radiation levels. High readings on this monitor will alarm, will activate the FBI system, and will turn off the first BLIP bending magnet in the Linac. BLIP monitors the air in the general room's environment. When this monitor reaches a given set point determined by FSS procedure, it activates local- and remote-alarms and the FBI system. The BLIP operators mounted an area-radiation monitor in the instrumentation panel of the control room (931A) with local alarms, and located portable meters for radiation surveys in building 931C. BLIP personnel check the instruments' operability as required.

BLIP uses procedures to define responses to all alarms. The RCTs routinely survey for radiological contamination; generally, it is below Contamination Area levels.

During all operations involving handling of significantly radioactive materials outside the Hot Cell (e.g., target transfers), the FSS monitor personnel-exposure levels and provide contamination monitoring per applicable Radiological Work Permits.

4.15.5. Activated Cooling Water at the BLIP

The activated BLIP cooling water presents an ionizing radiation hazard. Beam power can be as high as 30 kW, and targets under bombardment become thermally hot and must be water-cooled to prevent overheating and possible damage from overpressure. The target cooling system is a recirculation system open to the air only at the top of the target shaft.

The primary mechanism producing radioactivity in the target cooling water is direct irradiation by the proton beam that results in some very short half-life products, primarily ^{15}O, $t_{1/2}$ = 2 min, ^{13}N, $t_{1/2}$ = 10 min, and ^{11}C, $t_{1/2}$ = 20 minutes. They may become airborne by going up through the target transport tube into the Hot Cell. There is a venting system for the Hot Cell that takes its air up through a venting stack. The release mechanisms are complex. Oxygen-15 likely relocates to air by the evaporation of H_2O, and by emission of some as O_2 gas. Carbon-11 likely relocates to air in the form of CO_2, CO, and CH_3OH.[149] The ^{13}N species formed by radiolysis of water is mostly NO_3^-, which stays dissolved in the water, although several percent may volatilize in the form of NH_3. Beam produces a small amount of ^{7}Be by nuclear reactions on oxygen in the water. However, ^{7}Be is not volatile and the BLIP has not found it in air

[149] T. Stenstrom, PhD Thesis, 1970, University Of Uppsala, Sweden, Radiolysis of Water by 185 MeV Protons

emissions. Very small amounts of other non-volatile radionuclides in the cooling water enter the water following recoil reactions in BLIP's structural materials and target windows; beam produces these nuclides by activating the stainless steel in structures. The Hot Cell's ventilation system sweeps all radioactive gases, which relocate to air, out of the building through a HEPA filter and an elevated stack. There is no effect outside the Hot Cell and inside the building from this source of radiation.

The radiation dose rate from radioactivity in the cooling water is proportional to the proton beam current, with approximately 6 rem/h expected at the pump and filter under typical beam conditions; BLIP shielded both of them. The pump, heat exchanger, filter and associated plumbing are located in trenches or pits below the floor level. The covers include two-to-three inches of lead; BLIP used the MicroShield code to determine the shielding requirements.[150] BLIP documented the calculations, and the FSS reviewed them.

The chiller loop starts at the process loop's heat exchanger and then goes outdoors to a mechanical chiller, moves through an expansion tank, a circulating pump, and then returns to the process heat exchanger. The water with an approved environmentally friendly antifreeze additive in this secondary loop is not radioactive. Thermally insulated and heated piping on the exterior of the building prevents freezing.

Other than routine water-sampling, typically 1 mL samples, operations personnel have no direct contact with the water. The components of the process-cooling system (e.g., pipes, filter, heat exchanger, pump, valves) all are contained within the Hot Cell or lead-shielded pits in the building's floor. Operators experience less than 5 mrem/h. RCD documented these calculations in MicroShield Radiation Shielding Calculations.[151]

4.15.6. Target Radioactivity in Cooling Water at BLIP

Periodically, the cooling water may contain some radioactivity because of a leaking target but this is measurable only after the decay of ^{15}O and other short-lived activation products. Gamma-ray spectroscopic analysis of water samples can identify if there is a target leak and, from the characteristic radiation signature, pinpoint the specific leaking target. Daily sampling and such analysis of the cooling water detects leaks after the decay of the water-activation products. To prevent the spread of contamination, operators recover leaking targets from the target area, bag them in the Hot Cell, and load them into the transport cask. Leaking targets do not introduce new hazards or significantly increase the level of existing ones.

4.15.7. Cooling System Failures at the BLIP

The cooling system has redundant pumps on both the process- and chiller-loops, and a dual compressor chiller with a back-up heat exchanger. Multiple flow and temperature sensors monitor the water-cooling system for the target mechanism, including monitoring the flow in the individual target boxes. Any improper indication initiates alarms and the Linac's FBI. BLIP also monitors the water level in the target shaft; readings too high or too low engender similar actions.

---

[150] MicroShield Radiation Shielding Calculations, prepared by K. Kolsky, Reviewed by H. Kahnhauser (RCD)

[151] Ibid

There are several sources of water leaks, i.e., target cooling water, tanks, domestic water, and rainwater. Many have dedicated leak indicators and associated alarms. Should a target cooling-water system leak, radioactive water would be contained within the facility. Alarms and their consequences would trigger notifications and automatic actions. Operators perform follow-up under work planning and control requirements.

If either the Target Cooling Water Tank or the Underground Storage Tank were to leak or overflow, the spillage would be contained and alarms would sound. Both conform to SCDHS Article 12 and SBMS's requirements.

Significant domestic water spills in the facility or rainwater intrusions potentially could enter the Target Cooling Water Tank or the pump/filter pits, thereby triggering the same alarms and actions as previously described.

4.15.8.Environmental Impacts from Water Releases at the BLIP

BLIP personnel postulate no direct liquid releases from the BLIP. All radioactive water has secondary containment, per Article 12 of Suffolk County Sanitary Code.

BLIP fills the target shaft (Target Cooling Water Tank, SCDHS #422, BNL tank #931-B-03) with de-ionized water. An alarmed leak-detection system identifies water in the secondary containment should the target shaft develop a leak. Level gauges monitor the water level in the tank, and trigger alarms to identify over-fills and water losses. A slow build-up of longer-lived activity, mostly Be-7, necessitates periodically replacing this water.

There is a ~550-gallon capacity holding tank (Underground Storage Tank SCDHS #423, and BNL tank # 931-B-04) buried under room 931C, that is used hold target cooling water removed from the target shaft. It has double-walled steel, the exterior of which is sprayed-coated with resin/fiberglass to minimize corrosion to the outside of the tank. An alarmed leak-detection system in the interstitial space between the tank walls identifies water in the secondary containment, should the primary tank develop a leak. Level gauges monitor the tank's water level, and are alarmed to identify a high level. When it is necessary to remove water from the tank, the C-AD pumps it to a mobile tank or to drums for disposal.

4.15.9.Soil Activation at BLIP

Secondary fast- and thermal-neutron flux activates the soil surrounding the BLIP tank. Secondary neutrons travel principally in the forward (beam) direction and, after leaving the 41 cm diameter water-filled shaft, traverse about 2 m of air before entering the soil. The activation levels are a function of the neutron flux, neutron energy, the elemental abundances in the soil, their activation cross-sections, the attenuation of the neutrons with depth into the soil layer, and the duration of irradiation. In 2000, BNL conducted state-of-the-art numerical modeling of soil activation at BLIP using Monte Carlo radiation transport codes, including LAHET-283, MCNP, and ORIGEN-2B. As expected, the findings indicated that the highest concentrations of radionuclides are in soils directly adjacent to the tank.

Actual core samples at different soil depths and distances from the tank indicate the level of radioactivity. Table 4.15.9 shows some results.

Table 4.15.9 Measured Soil Activation at BLIP

Isotope	Half-life (y)	Activity (pCi/g)
H-3	12.26	4020
Be-7	0.147	73,200
C-14	5730	4.53
Na-22	2.61	42,600
Fe-55	2.73	5900

Of the entire inventory of radionuclides produced in the soils surrounding the BLIP target vessel, BNL only detects tritium and sodium-22 in groundwater, both of which have long half-lives and leach from the soils by rainwater infiltration. The groundwater table is located approximately 10 m below the base of the BLIP tank; no BNL or private water-supply wells are located immediately down gradient of the BLIP facility.

4.15.10. Credited Controls for Soil Activation at BLIP

In 1998, tritium was detected in the groundwater immediately down gradient of the BLIP facility at concentrations exceeding the 20,000 pCi/L drinking water standard. Following an extensive investigation, the likely source of the tritium was determined to be the activated soils that surround the BLIP tank. Because of this impact to groundwater quality, the BLIP facility was designated an Area of Concern under BNL's Environmental Restoration program.

The footprint of the existing building 931 is larger than the area of the activated-soil zone; however, the building did not completely prevent rainwater from reaching that zone. In response to the 1998 detection of tritium in groundwater, BNL improved the storm-water management program at the BLIP to prevent rainwater infiltrating the activated soils below the building. BNL redirected the BLIP building's roof drains away from the building footing, resealed paved areas outside the building, and installed a cap on three sides of the building.

In 2000, the DOE-EM provided funds to install an additional protective measure by injecting colloidal silica grout, referred to as a Viscous Liquid Barrier, into approximately an 85-m^3 volume of the activated soils. Model projections indicated that this treated volume contained more than 99.9% of the activated inventory in the soil. The grout lowers the permeability of the soils, thus further reducing the ability of rainwater to leach radionuclides should the primary storm-water controls or impermeable cap fail.

BNL established a groundwater surveillance program for the BLIP facility. The monitoring-well network encompasses two up gradient wells and five down gradient wells. Surveillance data from these wells verify that the engineered controls are effective in protecting groundwater quality.

Following the 1998 installation of the BLIP cap and other improvements to the storm-water controls, tritium concentrations decreased to much less than 20,000 pCi/L, and remained there until the summer of 2000. BNL detected a short-term increase in tritium concentrations in the monitoring wells following the May-June 2000 injection of the grout, which had displaced a small volume of tritiated soil pore-water. Some of this displaced water entered the aquifer below the BLIP building.

Since 2000, tritium concentrations have risen and fallen sporadically. The groundwater-monitoring data suggest that the periodic spikes in tritium concentrations relate to the flushing of

residual tritium located close to the water table. As the water table rises, older tritium leached from the activated soils prior to their capping in 1998 and from the grout-injection project are flushed from the vadose-zone soils close to the water table. BNL expects that the amount of tritium remaining in this zone close to the water table will decline over time due to this flushing mechanism and by natural radioactive decay, a concept supported by the most recent data.

The C-AD keeps the gunite cap (a Credited Control), the paved areas and the roof drains in good condition to control storm-water infiltration. Although personnel cannot inspect the grout by direct observation, the C-AD expects it to be in good condition and feels it would be effective in preventing significant leaching of tritium from the activation zone should the primary storm-water controls fail.

If unexpectedly high levels of BLIP-related radionuclides reached groundwater-monitoring wells again, BNL would implement its Groundwater Protection Contingency Plan. The Plan requires several formal actions including notifying BNL's management, the DOE, and regulatory agencies, as well as developing strategies to investigate and remedy the situation.

4.15.11. Routine Airborne Activation and Emissions at BLIP

The C-AD provides ventilation of the BLIP Hot Cell and, therefore, the Cooling Water tank, by exhausting the Hot Cell through a stack that is about 18 m above the grade at BNL's site boundary and about 7.8 m above the surface of the BLIP's lower roof. A large variable speed-blower maintains negative pressure in the Hot Cell by pulling air through roughing filters, a High Efficiency Particulate Air filter (HEPA), and a charcoal filter. A flow sensor in the air stream tied into the beam interlock system ensures proper blower operations. Radioactive air emission levels out the stack depend upon several factors, i.e., the beam's energy and intensity, the amount of water in the primary beam's path, the length of the operating period, and ambient temperature and humidity.

The C-AD monitors post-HEPA exhaust continuously for gaseous- and particulate-radioactivity during the beam's operation; the former arise chiefly from proton irradiation of the cooling water (^{11}C, ^{15}O, and ^{13}N). The C-AD forwards such output data to BNL's Environmental Protection Division (EPD) who calculate airborne radioactive emissions, and determine the site-boundary dose to the Maximally Exposed Individual (MEI). The C-AD continuously monitors for particulate- and tritium-emissions from the stack; the EPD analyzes data weekly and reports potential impacts from all radioactive air emissions from BLIP in BNL's Annual Site Environmental Report and the annual NESHAPs Report.

The C-AD also tracks air emissions from BLIP indirectly by monitoring the total beam intensity in micro-amps and hours of beam operation. BLIP demonstrated the precision of the correlation of micro-amp hours to radioactive air-emissions, and hence its value as an emissions-tracking tool. The BLIP records micro-amp hours daily during beam operation, so enabling them to track total emissions in real time.

Previously, BNL determined the annual dose from the BLIP facility to be well below 0.1 mrem to the MEI. However, review of this archival data revealed that the EPD considered only the emission of ^{15}O in dose estimates. In 2001, routine confirmatory sampling identified ^{11}C as an additional emission component. Therefore, the EPD included ^{11}C in assessing dose for the MEI.

Furthermore, in calendar year 2001, the emissions from BLIP facility reached 0.137 mrem to the MEI, as calculated using EPA's CAP88 code, exceeding the 0.1 mrem dose limit

requiring continuous emissions monitoring. This rise in emissions and dose reflected an extraordinarily long operating period; 37 weeks versus the typical 10 to 16 weeks. The operating period actually represented two runs in fiscal year 2001 and fiscal year 2002, which ran back-to-back in calendar year 2001. Normally, emissions at this level need continuous monitoring, and BLIP continuously monitors emissions.

In 2004, BLIP installed Plexiglas housing within the Hot Cell enclosing the top of its target shaft and the target-drive mechanism, and added a variable damper in its ventilation duct. BLIP intended both features to lower air emissions by reducing the air exchange rate over the target cooling-water tank.

In 2008, anticipating increased usage of the BLIP, and, therefore, the potential for increased emissions. BNL applied to the EPA for increased emissions from BLIP based on plans to upgrade the exhaust stack and monitoring system to be compliant with national standards. The EPA approved[152] an increase in BLIP's operating hours based on a projected annual offsite dose-equivalent of 0.2 mrem/y, and sanctioned the modification of the BLIP stack to be ANSI-compliant.

In April 2010, the C-AD measured elevated levels of airborne radioactivity near BLIP above 50-microR/h, which is an RCD ALARA trigger for radiation in uncontrolled areas onsite. Thereafter, the personnel from C-AD and BLIP determined the reason for the higher than routine emissions. To do so, they measured airborne emissions and ground-level exposure rates near BLIP using different beam energies and intensities, different routine-production targets (e.g., RbCl, Ga), different beam-shape tunes (e.g., Gaussian tune), and different fan speeds for the emissions. Both groups studied routine BLIP targets with 20 mm of water exposed to proton beam, and with the unique targets used in 2010 with up to 65 mm of water exposed to this beam. BLIP irradiated these targets during each study for 24 hours or less if radiological surveys at ground level documented elevated levels of radiation above 50-microR/h in uncontrolled areas for 8 hours or more. Their conclusion was that the unique 2010 targets with more water path exposed to higher energy proton beam caused the higher than routine emissions from BLIP's stack.

Since transferring to the C-AD in FY11, BLIP limited the water path exposed to high-energy proton beam to 20 mm or less by installing vacuum spacers in the beam-target path, and by placing the unique targets downstream of routine ones, so that they receive lower energy beam. Consequently, the measured ground-level exposure rates in 2011 were the same as in the years before 2010, that is, about 5- to 10-microR/h in uncontrolled areas near BLIP, which is similar to natural background levels.

In 2010, when the C-AD observed higher ground-level exposure rates, the BLIP facility had operated over 26 weeks. During that year, the BLIP released 1741 Ci of ^{11}C and 4320 Ci of ^{15}O; these emissions resulted in a projected 0.92 mrem to the MEI from BLIP operations.[153] The annual MEI limit under the NESHAPs permit for BLIP (EPA # BNL-2009-01) is 10-mrem/y because the new BLIP stack is ANSI-compliant.[154] BNL completed the stack and monitoring

[152] EPA Response to NESHAPs Permit Application, Letter from P. Giardina (EPA) to M. Holland (BHSO), 9/25/2008

[153] 2010 BNL Radionuclide Air Emissions Annual Report

[154] The current BLIP stack meets the requirements in 40CFR 61.07: Application for approval of construct or modification; 40CFR 61.93: Emission Monitoring and Test Procedure; and Federal Register/Vol. 6, No. 174/Monday, September 9, 2002: Amendment to NESHAP Subpart H for ANSI requirement (effective date January 1, 2003).

modifications after the EPA approved the modification in August 2009, just prior to the 2010 running period.[155, 156]

4.15.12. BLIP Target Gas Emissions

If a target leaks while in the beam, there may be some gaseous diffusion through the leakage of krypton, for example, potentially resulting in an airborne radiation-release. Since the gas first must diffuse through the irradiated salt in the target and then out of the target's containment, the amounts of radioactive gas entering the water are small and its daily water-gamma assay will indicate the leak. BLIP removes and contains leaking targets to prevent further gas release to the environment. Although this is good management-practice, the C-AD determined that BLIP could not reach NESHAPs permit limits from this mechanism.

The EPD studied the dose at the site boundary and at nearby buildings resulting from a hypothetical catastrophic failure of the NaI target; they postulated this as a sudden total release of several curies of Xe-123. Calculated doses were well within guidelines.[157]

4.15.13. Particulate Emissions at the BLIP

The exhaust stream from the Hot Cell could contain particulate radioactive contamination. For any type of such release, the HEPA filter system installed in the stack would capture and hold it.

4.15.14. Transporting Radioactive Materials from the BLIP

The BNL Transportation Safety Officer reviewed the hazards and approved controls associated with the on-site transfer of irradiated targets and related materials from the BLIP to the Building 801 Target Processing Laboratory. BLIP procedures require appropriate transportation controls and safety assessment, and relevant RWP(s). To transport the targets, high-level radioactive waste or other radioactive materials, the BLIP uses a custom lead and steel cask (~5300 pounds) and a forklift. Using aligned shuttered lead doors ("target porthole") on the Hot Cell and on the cask, BLIP personnel place the targets into the cask with minimal radiation exposure to personnel. BLIP designed the cask to minimize the possibility of its dropping, or falling off the carrier vehicle, which may be either forklift or truck, and to assure there is no release of radioactivity in such a circumstance. An RCT monitors all Hot Cell-to-cask transfers, and the reverse, and escorts all transports of BLIP targets in a separate vehicle. Approved restraining straps and attachment devices on the cask secure it to the forklift.

If an incident that resulted in a release of radioactive material should occur, the RCT covering the transfer would take charge as "first responders." Containment and area-access control would be their primary considerations. The RCT would summon appropriate assistance via ext 2222 or ext 911.

---

[155] 2009 NESHAPs Application for BLIP Stack

[156] BNL NESHAPs Permit for Radionuclide Emissions

[157] Dose Evaluation for Radioiodine Release from the BLIP Facility, memo from G. Schroeder to L. Mausner, 2/10/1999

4.15.15. RRPL Radiological Hazards

There is negligible risk of radiation exposure from the normal operations of the RRPL to non-occupational personnel and to nearby BNL radiological workers not associated with the RRPL. The areas accessible to the public where the potential of radiation exposures due to RRPL normal operations are possible are

- Parking lot on the west side of Building 801, about six feet from the outer building wall
- The road running along the south side of Building 801, about six feet from the concrete block shielding
- The road adjacent to the northwest side of Building 801

The road running along the south side of Building 801, about six feet from the concrete block shielding, represents the shortest path to an outside area from any radioactive source in the Hot Cell in the TPL, and the south wall, viz., 41 inches of concrete, is the least shielded wall of Hot Cell. An analysis[158] of the adequacy of the south wall's shielding concluded that normal operations of the TPL would not exceed Administrative Control Limits. In addition, the RCTs routinely measure radiation levels outside the TPL when significant dose rates arise in Room 2-66A, or when large quantities of radioactive material are present in Hot Cell, such as when the TPL receives irradiated targets or if target bodies are disposed of. The RCT's survey and monitor RRPL operations to ensure acceptable dose rates.

The area of road adjacent to the northwest comer of Building 801 receives radiation exposure from the HEPA/charcoal filter bank located on the roof of the Semi-Works Filter Room (MEMD-l). To reduce such exposure, the C-AD partially shields the filter bank with a 10-cm-thick steel wall. In addition, the RCTs routinely monitor the HEPA filter bank and road to verify acceptable radiation dose rates and compliant radiation-area postings.

The radiation levels for general access within Building 801 adjacent to the RRPL are usually less than 1 mrem/h. The C-AD posts the RRPL as a Radiological Buffer Area allowing only appropriately trained personnel unescorted access to these areas. The RCTs periodically survey radiation and contamination to verify the expected levels in this area. They post radiation-survey maps on the primary entrance doors to the TPL and the Vault (Room 2-51) to alert personnel when an unusual radiation exposure condition exists within the facility. The most significant source of routine exposure to BNL's non-RRPL personnel results from the periodic change-out of the various roughing and HEPA filters. To maintain their radiological exposure ALARA, the filters are of a "bag-in, bag-out" type that minimizes exposure time, and the potential for spreading contamination.

BNL staff undertook an evaluation[159] to determine the worst-case on-site radiological exposure assuming a worst-case release from the RRPL. It showed that, in the absence of any filters, the radiological dose to an individual on the Laboratory site would be 10 µrem.

Handling radioactive material in the RRPL presents a potential for radiation exposure to RRPL personnel. For routine and non-routine operations, C-AD classifies radiation hazards by work area as follows:

- Peripheral Work Areas: The radiation levels in the RRPL routinely are below 1 mrem/h except in those spaces posted as Radiation Areas; the C-AD accordingly posts specific laboratories, depending on the radioactive material in use. The Vault (Room 2-51) is a posted Radiation Area, as is the TPL

[158] Archival TPL South Wall Shield Analysis, 1995
[159] B-80l Hotspot Analyses, 2006

- Hot Box/Hot Cell Operations: RRPL workers handle radioactive material remotely in the hot boxes or hot cell. BNL's safety analysis of the adequacy of the shielded enclosures used in the TPL[160] concluded that for anticipated operations, the radiation shielding provided by the hot boxes and hot cell is adequate. Radiation levels at hot cell operator locations generally are below 5 mrem/h
- TPL Fume Hood Operations: Work with dispersible radioactive material at levels above "bench top" limits occurs in ventilated enclosures, at either hot cell/boxes, or fume hoods. Workers transfer radioactive material to/from the hot-boxes/hot-cell via the radioisotope fume hood attached to Hot Boxes 1 and 2, and another fume hood attached to Hot Box 7. Shielding, viz. stacked lead bricks and lead-glass viewing windows, minimizes the risk for whole-body radiation exposure. Workers minimize radiation exposures to the extremities, the hands and arms, by using long handled tongs where possible. They place highly contaminated materials from the hot cell/boxes' hood in secondary containers, primarily plastic bags, before removing them from the hood. When shielding is required, workers may place contaminated materials in small, hand-carried lead pigs. All work with dispersible radioactive material is conducted under an RWP
- Radioactive Material Transfer to/from Shielded Enclosures: RRPL workers transfer high-level radioactive material routinely to and from the shielded enclosures in lead pigs. They brings high-level radioactive material into the Hot Cell in the target-receiving area (Room 2-66A) or Hot Box 7 using specially designed transfer pigs that mate to the shielded clam-shell opening on the east wall of the cell/box. The RRPL remotely transfers a source with negligible potential for radiation exposure to operating personnel. They also bring high-level radioactive solid-waste out of Hot Cell 1 or Hot Box 7 through the clamshell opening, remotely transferring the waste inside a one-gallon can into the transfer pig or other shielded container. The RRPL's safety analysis of the adequacy of the shielded transfer pig used in the TPL[161] concluded that for anticipated operations, radiation exposure levels at contact with the pig routinely fall below 25-mR/h. The RRPL controls transfer of targets from the BLIP to the TPL by RWPs. An RCT monitors these transfers, with radiation surveys of the pig and contamination surveys of the target-receiving area after the job is completed
- Acid Scrubber Operations: The acid-scrubber system operates near the west wall of the target-receiving area. Periodically personnel measure the pH of the buffer solution, replacing it if the pH falls outside the normal value or when system's radiation levels approach the predetermined action level. Maintaining this system requires minimum radiation exposure to TPL personnel. In the past, TPL reached the pH action-limit approximately twice per year. This restriction is coupled with a minimum amount of time required to dispose of the radioactive buffer-solution by opening a valve to let the buffer gravity drain to the D-Waste system
- Other Fume Hoods: Workers use the other HEPA-filtered fume hoods throughout the RRPL for low-level dispersible radioactive materials, lower than those in the TPL
- Other Radiological Work: Workers enter the hot boxes or the Hot Cell for maintenance and cleaning operations, and other non-research related work under either general- or job-specific-RWPs

---

[160] BLIP Upgrade Shielding Review, 1993
[161] Ibid

This work accounts for a majority of the radiation exposures received by personnel during RRPL operations. The C-AD does not allow personnel access into Very-High-Radiation Areas or into areas where workers could exceed administrative dose-levels during the course of the job.

4.15.16. RRPL Environmental Radiological Hazards

During the normal operations of the RRPL, there are negligible radiological emissions to the environment. All the radiological facilities within the RRPL are HEPA-filtered, and some are charcoal-filtered. The C-AD disposes of all radioactive waste through the D-Waste system or as solid waste through the EPD. The RRPL's staff monitors all HEPA-filter differential pressures. Within the TPL, high differential pressure gauge readings and low airflow readings alarm on the ventilation panel. BNL monitors radioactive emissions from the Main Ventilation System. The EPD[162] evaluated a worst-case scenario of radioactive emission from RRPL, concluding that lacking any filters, operations would not exceed the public's doses limits. Workers routinely package radioactive materials for on-site transfers, and off-site transportation. The C-AD adheres to the requirements of the SBMS Subject Area for the Transfer of Hazardous and Radiological Materials On-site, and similarly for their transportation off-site. Only qualified staff performs such tasks using the approved procedures,

4.15.17. RRPL Accident Scenarios

Handling radioactive samples in any area within the RRPL potentially could spread radioactive contamination. RCTs routinely survey areas of the RRPL accessible to personnel for contamination; workers minimize its spread through work planning and control. The following are possible accident scenarios that would spread radioactive contamination:

- Transfer of Material Using Lead Pigs: Workers transfer high-level radioactive samples brought into the TPL inside secured lead pigs that are monitored by the Facility Support Group. These actions assures that the sample does not fall out of the pig during transport
- Spilling a Radioactive Sample in a Fume Hood or on the RRPL Floor: Personnel work in fume hoods within a containment tray or behind temporary shielding; this is dependent upon the hazards present. HEPA-filtered fume hoods for work with dispersible radioactivity operate under negative pressure to prevent spread of airborne contamination. Personnel working within the fume hoods wear gloves, and possibly, double gloves and sleeve covers depending upon the type of work, as stipulated in the RWP. Workers ensure that all radioactive samples brought out of the fume hoods are contained; highly radioactive samples necessitate primary containment, generally lead pigs, and secondary containment such as plastic bags. The C-AD relies on appropriately trained, qualified personnel who understand the processes and radiological controls
- Waste Pipe Leak: A leak in a D-waste pipe within the trenches beneath the floors of the RRPL is a credible accident scenario. These trenches have leak-detection systems to provide early warning to personnel. The pipes have concrete shielding (~ 15 cm) to reduce radiation exposure from a leak. Entrance to the trenches and necessary decontamination work is by RWP and Confined Space Permit, as required

[162] NESHAPs Evaluation - Lab 2-52, 2002 and NESHAPs Evaluation - Room 2-66 and 2-66C, 2002

- Water leaks in the Hot Cell/Hot Boxes: The RRPL pipes domestic- and ionized-water into various hot cells and boxes for processing the targets. If a pipe or valve fails, water accumulates in the hot box and eventually overflows into the TPL area floor, significantly contaminating the TPL. In such events, TPL workers isolate the common supply-line for these water systems to prevent or minimize contamination
- The Ventilation System in the "Hot" Area Fails: The entire system may shut down due to a total loss of normal- and backup-power, a plugged HEPA filter, or by the disruption of airflows. Ventilation shutdown would cause air to flow from areas of high- into areas of low-contamination. There is a backup generator for the Main Ventilation System in case of power failure. The backup generator, located on the south side of B801, starts up automatically within seconds of a power failure, and can supply sufficient power to operate all three of the building's exhaust fans on the roof. The F&O maintains and tests this generator. Upon restoration of normal electrical power, it stops automatically. The loss of a single blower on the Main Ventilation System would not compromise the radiological containment of the radiological facilities within the RRPL. All three off-gas blowers are unlikely to fail simultaneously. If that were to happen, the radiological containment in the shielded enclosures of the TPL may fail, causing contamination within the "hot" area, and potentially in localized non-contamination areas. Alarms would alert RRPL's staff to a ventilation shutdown in the Main Ventilation System. Previous contamination-smear surveys conducted after scheduled fan shutdowns have not detected any contamination outside the containment areas

The C-AD minimizes the danger of plugging of the fume-hood's HEPA filter by using differential pressure (DP) gauges with readouts located on the hood's face; most have airflow alarms. Within the TPL, there are DP-gauges on the filter bank, and both high-pressure and low-airflow alarms on the ventilation panel in the TPL, both indicative of plugged filters. The ventilation-control system monitors each hot box/cell fume hood for airflow through the ventilation ducts, with readouts on the ventilation panel that annunciates the alarms for low-flow condition denoting insufficient ventilation. In addition, there is redundancy in the HEPA system for the Room 2-66 enclosures; thus, dual filters are mounted side-by-side so that a single clogged filter would not eliminate exhausting capability.

Operators can shut down the Main Ventilation System if there is a fire in the Semi-Hot Cell Filter Room (Room 2-63). This room contains the air-pressure controllers for the system. However, BNL constructed this room with nonflammable materials and no flammable material is stored in it.

4.15.18. RRPL and Inadvertent High-Level Radiation Exposure to Personnel

A credible accident in the TPL is an inadvertent radiation exposure to personnel from BLIP targets or target-processing liquids should the doors to a shielded enclosure accidentally open or if during a planned entrance into one of these enclosures personnel encounter an unshielded radiation-source. To prevent these scenarios, the C-AD locks the personnel-access doors to the hot boxes, Hot Cell 1, instituting strict key control along with a dual-lock system that requires an RCT to participate with RRPL staff. All personnel access to these areas is under RWP control. Operators open the cell, using approved procedures, only after proper shielding is in place or removal of significant radiation sources from the work area, followed by a radiation survey by the RCT.

There is no credible accident-scenario causing life-threatening acute whole-body exposure. In the past, the most radioactive source measured in the TPL was an irradiated target at 10-rem/h at 30 cm. For a credible accident scenario, personnel would have to be near it for extended periods, i.e., more than 15 minutes to exceed the C-AD's ACL of 1250 mrem, and 30 minutes to exceed the annual dose limit of 5 rem. The C-AD treated this as negligible risk for several reasons:

- Past operating experience revealed that unshielded radioactive sources only of ~5 rem/h at contact will alarm GM counters not only in the TPL but in adjacent laboratories within the semi-hot corridor, thus quickly alerting personnel
- Shielded enclosures are used where the largest sources are kept locked and under strict key control
- All entries into shielded enclosures require radiation surveys and RCT coverage
- Administrative-procedure control requires the presence of at least two persons (RCT and TPL Operator) when handling irradiated targets, such as bringing them into the BLIP, removing waste from the hot boxes/cell or when entering a hot box/cell
- Before entering a hot box/cell, the RWP and approved procedures require the RCT to undertake a radiation survey that would detect unshielded sources of this magnitude

The unplanned release of radioactivity may occur through several scenarios, as described below:

- Personal Contamination with a High-Level Radioactive Source Risk: The C-AD assessed as negligible such risk after instituting controls. The largest amounts of radioactivity that personnel can encounter, and routinely do, are sources that must be shipped offsite. Workers could drop them when transferring them from the hot box to a shipping pig, thereby possibly contaminating personnel. Radiation measurements show levels of these sources are less than 20-rem/h at contact. The C-AD determined that the risk is extremely unlikely to cause an acute whole-body exposure of 25 rem. RWP and approved procedural controls may require wearing personal protective equipment (e.g., gloves, coats, rubbers) and using remote handling tools when handling samples containing large amounts of activity
- The C-AD judges that dropping/spilling radioactive material not involving direct contamination of personnel has negligible risk, given the current controls. In this scenario, personnel easily can move away from a dropped/spilled source, so minimizing their radiation exposure
- The C-AD assesses the risk associated with a "D-waste pipe or tank leak within the RRPL as negligible, given the current controls. These pipes and tanks lie in trenches shielded with at least 15 cm of concrete, and a leak-detection system is in place. Programmatic clean-up/repair or public concern would be most the severe impact
- The C-AD determined that the risk of a ventilation failure of the Main Ventilation System is negligible with the current controls. There is redundancy in the blower fans for all ventilation, and flow alarms on all but one exhausted device. An archival study of B801 ventilation[163] demonstrated that with all the fans off in buildings 801 and 802 there was a "natural draft" up the old 100-m stack. The building's new exhaust system disconnected the B801 air exhaust from this tall stack, and the exhaust now goes to three new fans on the roof of B801, BEF-1 through BEF-3. These new fans have backup power from a diesel generator located outside the south of the building. Therefore, the spread of contamination is unlikely

[163] Building 801 HVAC Systems

due to draw air into the hot boxes/cell through these exhausts. Programmatic clean-up/repair or public concern is the most severe impact.

4.16. Oxygen-Deficiency Hazards

OSHA defines an oxygen-deficient atmosphere in 29CFR1910.146 as atmospheres containing less than 19.5% oxygen by volume. Normal atmospheres contain ~21% oxygen. The actual effects from oxygen-deficient atmospheres do not begin until the concentration falls to ~17%. If a small number of workers experience potentially oxygen-deficient atmospheres, it is cost effective to use conservative controls for their protection. However, with large exposed populations, the C-AD feels it necessary to establish Credited Controls. For example, the operability of the ODH alarms and ventilation fans in the RHIC tunnel is a Credited Control.[164] With too little control, the injury rate may be unacceptably high. The C-AD also puts controls in place to prevent acute injury from low oxygen-concentrations.

Controls address two types of exposures: One where a known oxygen deficiency exists; the other in which an oxygen-deficiency does not exist but there is a potential for its occurrence. A known oxygen-deficiency could exist, for example, in a confined space in which sampling shows <19.5% oxygen. Work planning determines the controls needed to work safely therein. Controls include periodic atmospheric-monitoring, self-contained breathing apparatus, ventilation, and confined space permits. The premise for controlling the latter condition, a potential oxygen-deficiency, is that the risk to workers should be no greater than that in a standard industrial setting.

If the C-AD stops exposure to a reduced oxygen atmosphere early enough, the effects on people are reversible. If not, permanent damage to the central-nervous system or death can result. Principally, disorientation and unconsciousness hinder people in escaping from areas of oxygen deficiency. For personnel actively working, faulty coordination occurs at ~13% oxygen, and loss of consciousness at ~10%.[165] A person in the general area of a catastrophic release of an inert gas at the RHIC and unharmed by a pressure wave would be alerted to the escaping gas by the noise, and, if a cryogenic gas, by the cold. That person may be able out-walk the expanding inert-gas cloud by holding their breath and safely moving to the nearest exit.

The C-AD focuses on controls for preventing potential exposure of workers to oxygen-deficiency in the general area of a potential release, but not the immediate vicinity of the release point. The survival of individuals in the general area is highly probable because of the administrative- and engineering-controls, monitoring systems, and training.

For the unlikely scenario wherein an individual is in the immediate vicinity of the equipment at the time of failure, that person would lose consciousness in seconds, and probably would not survive. If the release was a cryogenic gas, the cold gas could cause irreversible lung damage.

Training for workers in areas of potential oxygen-deficiency hazards covers methods to become aware that a release of inert gas has occurred, escape methods, and the use of proper oxygen-monitoring devices and escape packs. In addition to training on using them, the C-AD provides ODH information in facility- specific courses required of all C-AD employees and users. For example, Collider Users Training covers ODH posting, the effects of oxygen

[164] RHIC ASE, Section 2.4
[165] ANSI/AIHA Z88.2 (1992), Practices for Respiratory Protection

deficiency, the ODH classification system, the ODH alarms, and when and how to evacuate the Collider.

The following description of the graded approach shows the methodology used to determine the controls necessary for areas having a potential for oxygen deficiency. The C-AD recognizes these simplified methods cannot quantitatively address the effects of the concentration gradients of the inert gas during its transient release. Thus, they employ a simplified analysis that assumes uniform mixing of the gas that is reasonable for helium and lighter gases. For heavier gases, such as Tandem insulating gas, the C-AD adopted a spectrum of assumptions bounding the cases for both uniform mixing and no mixing. As noted, individuals near the location of any release have higher likelihoods of injury or death. Thus, the C-AD relies on a combination of the BNL's SBMS ODH methods coupled with engineering judgment, worker training, evacuation procedures, and monitoring equipment to ensure an acceptably safe workplace.

With the BNL SBMS models, the C-AD determines the oxygen-deficiency hazard (ODH) classification of a building. The SBMS based their model on the Fermi National Accelerator Laboratory's (Fermilab) ODH model. It is a prescribed method to determine the necessary level of hazard control for a building having the potential for oxygen deficiency. The C-AD uses a graded approach to implement hazard controls as a function of the computed ODH fatality rate. Fermilab selected the fatality rate as the hazard index since death is the extreme effect of such exposure. The average industrial fatality rate, $\sim 10^{-7}$/h, triggers protective measures other than training and postings.[166] In addition, the SBMS prescribes graded controls to reduce the potential of acute oxygen-deficiency injury in which injury is a function of the minimum oxygen concentration to which the individual is exposed.

The fatality rate in the SBMS model is the product of two quantities. One quantity is the probability per hour of an initiating event causing an oxygen deficiency; the other is found by estimating the minimum oxygen-concentration during the transient, assuming instantaneous mixing of the air and inert gas in the building volume. It is represented by a factor between 0 and 1, (Figure 4.16.a). The C-AD uses the computed fatality rate to define the ODH class necessary to protect personnel.

The ODH fatality rate is

$$\Phi = PF$$

Where
Φ = the ODH fatality rate per hour
P = the expected rate of the event per hour, i.e. initiator frequency
F = the fatality factor for the event, Figure 4.16

The C-AD determines the value of P, the initiator frequency, using actual equipment failure-rate data provided by Fermilab, and by the Nuclear Regulatory Commission, and updates it with actual RHIC-failure rates.

[166] T. Miller and P. Mazur, Oxygen Deficiency Hazards Associated with Liquefied Gas Systems: Derivation of a program of Controls, Am. Ind. Hyg. Assoc. J. 45(5):293-298(1984)

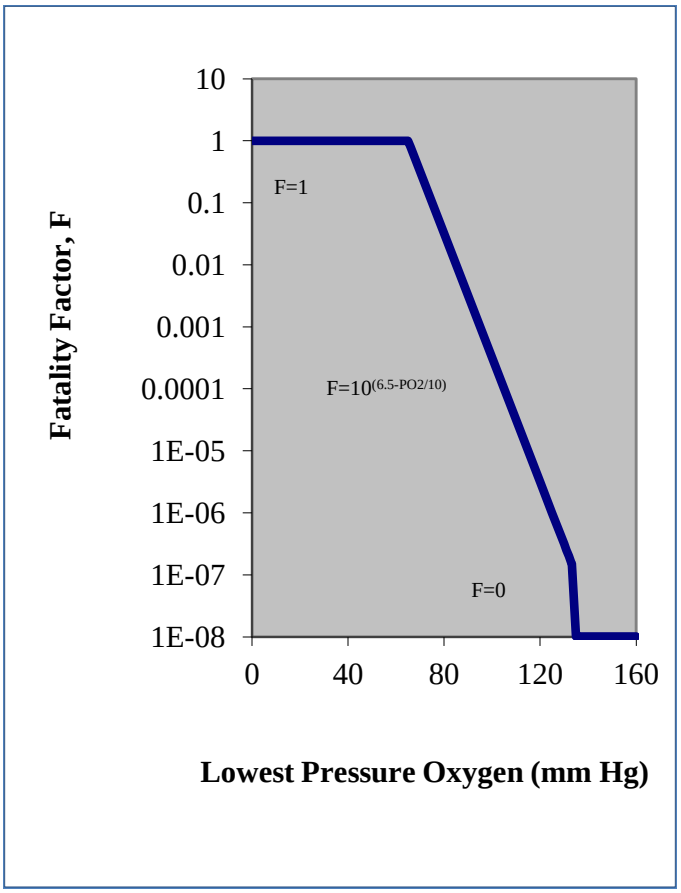

Figure 4.16.a Graph of the Fatality Factor

The value of the fatality factor, F, is the probability that a fatality will result from a particular gas-release. Figure 4.16.a defines the relationship between the value of F and the computed oxygen partial pressure. To compute the partial pressure the mole fraction of oxygen in the building atmosphere, C-AD multiplies by normal atmospheric pressure, 760 mm Hg. If the oxygen concentration is greater than 18%, about 137 mm Hg, then the value of F is zero, viz., no exposures above 18% contribute to fatality. If the oxygen concentration is 18%, then the value of F is 10^{-7}. At decreasing concentrations, the value of F increases until at some 8.8% oxygen, about 67 mm Hg, the probability of fatality is unity. At this concentration, only one minute of consciousness is expected.

The C-AD uses the computed value of the fatality rate,Φ, to determine the ODH class of the building, as shown in Table 4.16.b.

Table 4.16.b ODH Class and Fatality Rate

ODH Class	Fatality Rate (per hour)
NA	$<10^{-9}$
0	$>10^{-9}$ but $<10^{-7}$
1	$>10^{-7}$ but $<10^{-5}$
2	$>10^{-5}$ but $<10^{-3}$
3	$>10^{-3}$ but $<10^{-1}$
4	$>10^{-1}$

Based on the minimum calculated oxygen concentration, the C-AD establishes the controls detailed in Table 4.16.c and 4.16.d.

Table 4.16.c ODH Controls

ODH Classification	Controls
0	Postings and training
1	Postings Training, including practical demonstration of: Personal oxygen monitor Self-rescue respirator (supplied atmosphere)
2	Ventilation Multiple personnel in communication (“2-staff rule”) Postings Training including practical demonstration of: Personal oxygen monitor Self-rescue respirator (supplied atmosphere)
3	Ventilation Unexposed safety monitor/observer Postings Training including practical demonstration of: Personal oxygen monitor Self-rescue respirator (supplied atmosphere)
4	Ventilation Unexposed safety monitor/observer Postings Training including practical demonstration of: Personal oxygen monitor Self-contained breathing apparatus (SCBA)

Figure 4.16.d ODH Controls for Acute Effects of Oxygen Deficiency

Minimum Calculated Oxygen Concentration	Controls
≥14%	Controls required by ODH classification
≥10% and <14%	Controls required by ODH classification plus ODH monitoring (either fixed area or POM) that alarms locally
<10%	Controls required by ODH classification plus ODH monitoring that provides alarms/indication both locally and before entering the area

The C-AD requires alarms be perceptible in the environment (e.g., visual or vibration in high noise areas).

The C-AD approximates the oxygen concentration in the building during a release of inert gas by solving the following differential equations. If the exhaust fan is on and the spill rate of gas, R, is less than the exhaust fan capacity, Q, then

$$V\frac{dC}{dt} = 0.21(Q - R) - QC$$

Where
V = building volume, ft^3
C = oxygen concentration, mole or volume fraction
t = time, minutes
Q = exhaust fan(s) flow rate, CFM
R = helium spill rate into building, CFM

If the exhaust fan is off or if the gas spill rate, R, is greater than the exhaust fan capacity, Q, then

$$V\frac{dC}{dt} = -RC$$

The C-AD evaluated all areas that have potential ODH hazards. Oxygen-concentration alarm points vary from 19.5% to 18%, depending upon the location. Alarms set points below 19.5% are acceptable because they warn of accidents and not of planned, routine working-conditions. The C-AD summarizes results for the affected areas in the following sections.

4.16.1.TVDG Oxygen-Deficiency Hazards

The Tandem Van de Graaff uses its inventory of insulating gas (~46% sulfur hexafluoride, ~44% nitrogen and ~6% carbon dioxide and 4% oxygen) to insulate the accelerator tanks. During operation, each tank contains 11,250 ft^3 of gas at 180 psig, i.e., ~35,000 lb or 160,000 ft^3 at atmospheric pressure. The gas has a specific gravity of about 2.85 and a low diffusion rate in air. The C-AD evaluated the hazards and controls for this gas in a detailed calculation for various potential release locations during gas transfer, and during normal

operations.[167] The evaluation encompassed the Tandem accelerator room and pit, mechanical equipment room, electrical equipment room, target rooms, basement, TtB tunnel, and the remote gas-storage area located on the hill above the TVDG building. The analyses included the potential effect of the heavier-than-air insulating gas by examining different cases of no mixing to complete mixing of the gas with the surrounding air, within the affected room's volume. Thereafter, the C-AD made system modifications to reduce the ODH hazards. They included automating the ODH Emergency Purge Fan based on low-sensed oxygen concentration, modifying the ODH Emergency Purge Fan to improve the flow rate of the heavy inert purge gas, and routing the relief-valves exhausts in the Mechanical Equipment Room outside the room. These upgrades limited the control of areas within the Tandem and the gas storage area to an ODH 0 classification. The following table summarizes the ODH classifications of the various areas at TVDG/TtB with and without the Emergency Purge Fan operable. The C-AD identified specific Credited Controls for ODH in the TVDG/TtB ASE, and described their bases in Chapter 5 of this SAD.

Table 4.16.1 TVDG/TtB ODH Classifications

Building Space	ODH Classification with Operable Purge Fan	ODH Classification with Inoperable Purge Fan
Accelerator Room and Pit	0	1
Mechanical Equipment Room	0	2
Electrical Equipment Room	0	1
Target Rooms	NA	NA
TVDG Basement	0	1
Gas Storage Room	0	0
TtB Tunnel	0	1

4.16.2.AGS Oxygen-Deficiency Hazards

The AGS ring near the liquid-helium-cooled Cold Snake Magnet used for polarized-proton running is posted as an ODH 0 area when the magnet is cooled. A leak of cold helium fluid can cause oxygen deficiency, and could occur when the C-AD fills the snake magnet and during normal operation. The magnet has ~ 0.5 MJ of electrical energy during operations. To bracket the consequences of all credible failures, the C-AD analyzed a catastrophic cryogenic pressure boundary failure caused by an electrical arc, and assumed it instantly releases the LHe to the AGS ring volume. The Cold Snake contains ~110 L LHe during normal operation, and attaches to a 500 L LHe Dewar during filling operations, so resulting in ~610 L LHe available for release. The calculation shows that an ODH 0 classification is appropriate.[168] Oxygen monitoring in the location of the Snake Magnet in the AGS ring, either with installed monitors or a personal portable-oxygen monitor, and posting the area as ODH 0 when the Cold Snake is in operation are adequate hazard controls. The C-AD lists specific Credited Controls for ODH in the AGS, Booster Linac, and EBIS ASE, and describes their bases in Chapter 5 of this SAD.

[167] L. Snydstrup, Calculation of Oxygen Deficiency Hazards for TVDG, Revision 0, November 5, 2001
[168] R. Karol, AGS Cold Snake ODH Calculation Revisited, December 5, 2008

4.16.3.g-2 Experiment (V-Line) Oxygen-Deficiency Hazards

This experiment is not running currently; when it did, the C-AD identified and operated several ODH areas. Plans are to decommission the g-2 area and transfer re-usable accelerator components to Fermi National Accelerator Laboratory.

4.16.4.RHIC Oxygen-Deficiency Hazards

Mechanisms exist that could release helium into the Collider Tunnel, the Service/Support Buildings housing valve boxes and associated cryogenic system equipment, and the buildings housing the refrigerators and helium-compressors. Table 4.16.4 lists the building's volumes and ventilation rates used in the ODH analyses. For the tunnel, each sextant has 2 to three more ODH fans than the three conservatively assumed in the ODH analysis. The notes to Table 4.16.4 explain the major assumptions of the calculations.

For the refrigerator building, the postulated accident is a truck hitting cold box 5, releasing 1/3rd of the available helium into Building 1005R. With a peak flow rate of 27,000 CFM into the building, and conservatively assuming that the helium-leak rate stays constant, an ODH 1 hazard class condition occurs after about 8 minutes with both ODH fans on, and after 5 minutes with one fan on[169]. This is adequate time for an individual to leave following an alarm; however, the C-AD conservatively classifies this building as ODH 1 when there is liquid helium in the cold boxes.

The RHIC's Compressor Building contains a large amount of helium gas, and the C-AD posts it as ODH 0 to warn staff of this large volume. The ODH exhaust fans limit the minimum oxygen concentration should a major helium pressure-boundary fail during operations.

In the RHIC tunnel, a postulated helium leak from a magnet line would enter the vacuum space and release helium directly into the tunnel when the pressure in the vacuum space increases to about 1.3 atm. About 60 vacuum-relief valves discharge helium at the bottom of the magnet string to the floor; it then moves outward to the tunnel walls. Both STAR and PHENIX have gas barriers to prevent the need to post these experimental areas for ODH hazard. Calculations show the tunnel must be posted as an ODH 0 area when helium is cooled down as long as its temperature is 40 K, and ODH 1 area when it is < 40 K down to operating temperatures.[170] Above 40 K, because of the decrease in density of helium, its release rate would be less than 10% of that at the operating temperature of 4 K.

The six Service/Support buildings do not need controls; however, the C-AD conservatively posts them as ODH 0 areas to raise ODH awareness because of the large inventory of helium in the buildings and for consistency with the ODH controls that were in place until the FY10 run. In the summer of 2009, the C-AD modified the cryogenic valve-box's vacuum relief valves in the Service/Support buildings to direct the relief exhaust gas directly outside the building instead of into it. Additionally, Lexan boxes now encase the valve-box's

[169] R. Karol, Collider Building ODH Calculations – Revisited, dated April 18, 2000 (Revised 5/26/00)

[170] R, Karol, RHIC Tunnel and Service Buildings ODH Calculations - Basis for ODH 0 Classification when Helium Temperature is≥ 40K, January 13, 2009 ; R. Karol, Determination of RHIC Component Helium Pressure Boundary Failure Rates and RHIC Tunnel Sextant, January 3, 2009 and R. Karol, Determination of RHIC Component Helium Pressure Boundary Failure Rates and RHIC Tunnel Sextant, January 3, 2009 and Refrigerator Building and Compressor Building Helium Pressure Boundary Failure Rates, January 5, 2009

electrical lead penetrations, directing any helium release towards the buildings' ceilings. These changes prevent a significant release of cold helium from causing an ODH condition therein.

Unless approved by the C-AD management for special testing or troubleshooting, individuals may only enter the RHIC tunnel when the helium temperature in the magnets is below 40 K provided that the main power supplies of the RHIC magnet are limited to supply a current of ≤ 530 amperes. The C-AD ensures this restriction by enabling the over-current trip circuitry, or by locking out the power supplies, so limiting to less than 1 MJ the energy available to an electric fault in the superconducting magnet when personnel enter the tunnel. The probability of a release of cryogenic helium into the tunnel increases if the RHIC magnet's main power supplies energize to the full operational level of 70 MJ. When power supplies are built to raise the magnetic field to hold 300 GeV protons, then about 100 MJ of energy will be in the superconducting circuit. This energy is stored in each of the ring's magnetic fields. Limiting the energy to below 1 MJ reduces the probability of a significant electrical arc in a main magnet that could cause failure of its helium pressure-boundary.

If the C-AD uses the 80 K Cooler during the collider's shutdown periods, the RHIC tunnel is posted ODH 0 and the tunnel's exhaust fans and oxygen sensors must be in service to limit the minimum oxygen concentration during this transient should a major helium pressure-boundary fail.[171]

The C-AD lists specific Credited Controls required for ODH in the RHIC ASE; their bases given in Chapter 5 of this SAD.

[171] R. Karol, Support Buildings and Collider Tunnel Sextant ODH Classifications with 80K Helium Cooler Operating, November 22, 2002

Table 4.16.4 - ODH Classification for Collider Buildings During Normal Operations

		Bldg.	Total Fan CFM	Frequency [1]	ODH Classification	
Building No.	Name	Vol. (ft^3)	(# Fans)	(per hr)	Case A[4]	Case B[5]
1005H	Compressor Building	250,000	100,000 (4 fans)	$6.4x10^{-6}$	0	0
1005R	Refrigerator Building	240,000	50,000 (2 fans)	$6.6x10^{-6}$	1	1
1001	Collider Tunnel - 1:00	310,000	60,000 (3 fans)	$2.64x10^{-6}$	1	1
1003	Collider Tunnel - 3:00	300,000	60,000 (3 fans)	$2.64x10^{-6}$	1	1
1005	Collider Tunnel - 5:00	390,000	60,000 (3 fans)	$2.64x10^{-6}$	1	1
1006	Intersection Region	NA	NA	NA	NA	NA
1007 1008	Collider Tunnel - 7:00 Intersection Region	400,000 NA	60,000 (3 fans) NA	$2.64x10^{-6}$ NA	1	1
1009	Collider Tunnel - 9:00	320,000	60,000 (3 fans)	$2.64x10^{-6}$	1	1
1011	Collider Tunnel - 11:00	300,000	60,000 (3 fans)	$2.64x10^{-6}$	1	1
1002B	2:00 Support Building	70,000	32,000 (2 fans)	NA[10]	NA	NA
1004B	4:00 Support Building	113,000	44,000 (2 fans)	NA[10]	NA	NA
1006B	6:00 Support Building	85,000	32,000 (2 fans)	NA[10]	NA	NA
1008B	8:00 Support Building	75,000	32,000 (2 fans)	NA[10]	NA	NA
1010A	10:00 Support Building	110,000	22,000 (2 fans) [9]	NA[10]	NA	NA
1012A	12:00 Support Building	110,000	22,000 (2 fans) [9]	NA[10]	NA	NA

Notes:

1. Frequency is the probability per hour that the bounding helium or nitrogen system failure occurs within the building. See R. Karol, RHIC Tunnel Sextant, Refrigerator Building and Compressor Building Helium Pressure Boundary Failure Rates, January 9, 2009 and R. Karol, Determination of RHIC Component Helium Pressure Boundary Failure Rates, January 3, 2009.
2. C-AD assumed the helium spill rates for B1005H and B1005R and the nitrogen spill rate in B1006B conservatively as constant. C-AD set minimum ODH Class for the Compressor Building conservatively at ODH 0 due to the inventory of the helium present.
3. Peak helium spill-rate obtained from AD/RHIC/RD-79, Estimation of Helium Discharge Rates for RHIC ODH Calculations, September 1995.
4. Case A assumed all assumed fans operational. C-AD set minimum ODH Class for the Tunnel Sextants and the Support Buildings conservatively at ODH 0 due to the inventory of helium present.
5. Case B considers one fan failed.
6. For the Compressor Building, the oxygen concentration will only fall to a minimum of 18.8%. C-AD set minimum ODH Class for the Compressor Building conservatively at ODH 0 due to the large inventory of the helium present.

7. For the Refrigerator Building, the time to ODH 1 was determined ($\Phi = 10^{-7}$). See text for description.
8. Tunnel Sextants 1003 and 1011 bound the conditions for all sextants because they have the smallest volumes.
9. In 2007, B1010A and 1012A exhaust fan configurations changed to one original 11000 CFM fan and a new replacement second fan at 13450 CFM in order to allow C-AD to use the original fan penetration for air conditioning of the building. Thus, the original ODH calculations are conservative.
10. In 2009, all six service-buildings had their valve box vacuum space relief valves vented directly outside the building, thus preventing a credible failure that would cause an oxygen deficiency in these buildings.

4.16.5.ERL Oxygen Deficiency Hazards

The C-AD evaluated areas of ERL in B912 that have potential ODH hazards. ODH sensors and alarms are located within the accelerator's enclosure, and within the ~~helium-recovery~~Compressor/Vacuum/Water ~~building~~Building. These areas are small enough such that alarms are visible and audible from any location within the rooms. Table 4.16.5 lists the results of the ODH analyses for the affected areas of ERL including portions of Building 912.[172]

.....

Table 4.16.5 Potential ODH Areas at ERL

Building	Free Volume	Bounding Cryogenic Leak Location	Spill Rate ~~(SCFM)~~of Gas or Total Liquid Volume Available	ODH Exhaust Fan Capacity (SCFM)
ERL ~~Cave~~ Accelerator Enclosure in B912	20,000 ft^3	Failure of 1-inch copper LN2 ~~transfer~~ supply line	~~3275~~3390 SCFM N_2	~~13,750~~12,000
ERL Helium ~~Recovery~~ Compressor/Vacuum/ Water Building	9500 ft^3	~~Rupture of Kinney vacuum pump helium discharge line~~Line break for main helium compressor	~~1150~~615 SCFM He	~~4850~~2000
Northeast Building Addition (NEBA) of Building 912	2,226,880 ft^3	Failure of 1-inch LN Supply Line	11,000 gal. LN	N/A
East Experimental Building Addition (EEBA) of Building 912	300,000 ft^3	Failure of 1-inch LN Supply Line	11,000 gal. LN	N/A

The ERL accelerator's enclosure volume assumed for ODH analyses conservatively excludes the labyrinth volumes and accounts for the equipment in the enclosure. The ERL Compressor/Vacuum/Water Building's~~helium-recovery building's~~ volume accounts for the equipment in the room. The ODH calculations show that both the enclosure and the helium-recovery building are ODH 0 areas.

In addition to the ODH inside the ERL blockhouse and the Compressor/Vacuum/Water Building, there is an ODH in parts of Building 912 contiguous to the ERL Blockhouse and

[172] BNL LESHC Meeting Minutes 06-06, May 18, 2006, Energy Recovery Linac in Building 912 - R. Karol, ERL ODH Calculations, January 8, 2008, and R. Than, C-AD Engineering Design Support Documentation, #010604071 CAL-10, ODH Analysis, Building 912 ERL and VTF

Refrigerator System. The bounding hazard is from a failure of the 1-inch LN supply line from the ~~external~~ 11,000-gallon LN tank located outside the NEBA building; a line that is located inside the EEBA and NEBA portions of Building 912.

4.16.6.Small ~~Blockhouse~~ Vertical Test Facility (SVTF) Oxygen-Deficiency Hazards

The ~~Small Blockhouse~~SVTF in Building 912 contains a polarized SRF electron gun experiment. The C-AD controls hazards therein by following 10 CFR 851, 10 CFR 835, and BNL SBMS's requirements.[173] There are no ASE requirements for the ~~Small Blockhouse~~SVTF; the C-AD sized its exhaust fan to maintain it at ODH 0. The potential leak rates from the SRF gun helium relief (390 g/s) and UHV burst disk (100 g/s) are large ones, and so the C-AD piped these release points directly outside the ~~blockhouse~~SVTF. The helium-spill rate for sizing the exhaust fan is a Dewar fill-line failure (25 g/s). Based on a ~~blockhouse~~ SVTF volume of ~~2700~~ 2500 ft^3, the C-AD determined an exhaust fan with a capacity of 1000 CFM maintains the ~~house~~ SVTF at ODH 0.[174] The fan must be on before entering the ~~blockhouse~~ SVTF if operators attach the Dewar to the fill line, and entrants must wear a POM . Table 4.16.6 lists the findings from the ODH calculation.

[173] Polarized SRF Gun Experiment

[174] R. Karol, B912 Small VTA House ODH Calculations (Revised), June 20, 2008 (Revised 12-3-08), and R. Than, C-AD Engineering Design Support Documentation, #010604071 CAL-10, ODH Analysus, Building 912 ERL and VTF

Table 4.16.6 ODH Calculation Results for ~~Small Blockhouse~~ SVTF in B912

Building	Free Volume	Bounding Cryogenic Leak Location	Spill Rate (SCFM)	ODH Exhaust Fan Capacity (SCFM)
~~Small Blockhouse~~SVTF in B912	~~2700~~ 2500 ft^3	Failure LHe Dewar pipe inside the ~~VTA House~~SVTF	~~330~~320	1000

4.16.7.Large Vertical Test ~~Area~~ Facility (~~VTA~~LVTF) Oxygen-Deficiency Hazards

The ~~Large VTA Blockhouse~~LVTF is a SRF testing facility and C-AD controls hazards by following 10 CFR 851, 10 CFR 835, and BNL's SBMS requirements. There are no ASE requirements for the ~~Blockhouse~~LVTF. The ODH control for this facility requires entrants to wear a POM when working on the top of the ~~blockhouse~~ LVTF when cryogenic gas is present in the vertical test Dewar. To get to the top of the ~~blockhouse~~LVTF, the C-AD requires the rolling roof to be open. Any inert gas retained in the ~~blockhouse~~ LVTF would vent out of the top of the ~~blockhouse~~ LVTF into the EEBA portion of B912, the large volume of which eliminates the ODH hazard for helium. As noted in 4.16.5, a failure of the 1-inch LN supply line would potentially cause an ODH inside NEBA and EEBA. The ERL ASE requires that ODH alarms in these parts of Building 912 are operable when LN is in the line and the line is not isolated from the supply tank. The C-AD requires an individual using the stairs to wear a POM to get to the top of the blockhouse; the POM alarms at 19.5% oxygen, warning the individual to leave the area. In addition, there is an installed oxygen monitor at the top of the LVTF to warn personnel of an ODH before rolling the roof to allow access.

4.16.8.BLIP/RRPL Oxygen-Deficiency Hazards

There are no existing ODH hazards at BLIP or RRPL that are beyond standard industrial ones. The C-AD evaluated BLIP/RRPL areas following the directions in BNL Subject Area on Oxygen Deficiency Hazards (ODH), System Classification and Controls.

4.17.Electrical Hazards

Chapter 3 and previous SAD revisions describe in detail the numerous electrical devices, magnets, power supplies, vacuum system, RF systems, beam instrumentation and controls employed at C-AD facilities, including its accelerators and experiments.

The sheer number of electrical devices and their conductors installed at accelerator and experimental facilities justifies recognizing electrical hazards as a major personnel hazard, which requires controls. However, the C-AD's electrical hazards are standard industrial hazards. Hence, the C-AD adheres to BNL's SBMS, Electrical Safety, which follows the safe work practices of NFPA 70E, Standard for Electrical Safety in the Workplace, to mitigate these hazards.

4.17.1.AC Distribution

The primary AC distribution is at 13.8 kV. The feeds are underground ones to substations located at various sites. Transformers convert the 13.8 kV to 480 volts AC for subsequent distribution. Because of the very high hazard, the substations are fenced in with controlled access by the BNL's F&O personnel. C-AD personnel do not normally have access to these areas.

Most secondary distribution is 480 V, 3-phase, 60 Hertz, ungrounded delta. The C-AD uses this electrical power directly in many pieces of equipment, motors, pumps, and power supplies. The C-AD further transforms the electrical power to 220/120 V, 3-phase for lights, utility outlets, and all general needs. Substations at Buildings 1005S and 1005H have grounded wye, which the C-AD transforms to 208/120 V. The RHIC tunnel's lighting is 277 V, which the C-AD feeds from 480 V to 480/277 V isolation transformers to reduce the magnitude of the fault current. The 480/277 V neutral is grounded. There are two 4160 V substations at Building 1005H to power the helium compressors. Substations A-500, Q and 925 are grounded wyes. The hazard at 480 V is not only from a 480 V shock, but also from possible arc formation at a short circuit. The short circuit currents are extremely high and an arc can spray molten copper and other materials. The procedures followed on 480 V circuits include training, LOTO or key lockout, circuit-voltage testing, and the use of proper personnel protective equipment.

4.17.2.High Voltage DC

Low Current - In many pieces of electronic equipment there are high voltage, low current power supplies. While the current in some cases may present a direct shock hazard, in others it will be too low to cause a direct injury, but may lead to indirect ones, such as falls, bumps or other physical- or electrical-mishaps. Accelerator and experimental components are prominently marked for a high-voltage hazard and the C-AD may interlock if there is a direct shock hazard. Experimenters equipment use high-voltage power supplies and the C-AD's ESRC reviews each experimental set-up before allowing its usage.

High Current – Current in the range of 10-50 mA passing through the body may cause significant physical harm, The RF systems, and various pulsed magnets, kickers, and other devices, use potentially lethal power-supplies. The C-AD marks all of them properly. The C-AD requires interlocks that actuate on entry to the supply that are hard wired to the power source; panel-indicator lights that show the power supply status; and provides local-remote lockout switches where more than one turn on location is used. The C-AD requires shorting devices, manual or automatic, on capacitor-storage devices.

4.17.3.High Current, Low Voltage

Many devices use high currents, up to several thousand amperes, at relatively low voltages. In most cases, the shock hazards are low, but a short circuit on the lines, just as in the 480 V AC case, can create a physical hazard. Here, the C-AD uses warnings, enclosing of conductors, and interlock devices for this standard industrial hazard.

4.17.4.RF Voltages

RF voltages in the many kilovolt level are present in the accelerating systems. Contact with them can result in shock and deep RF burns. The C-AD requires the same protections as used for high voltage DC.

4.18.Fire Hazards

The primary combustible loading in the injectors, accelerators, collider, and experiments consists of magnets, power- and control-cables, and beam-diagnostic equipment located throughout the complex. None is highly flammable, and with the possible exception of cables installed between 1958 and 1970. Beginning in 2011, the C-AD is reviewing all cables to ensure they self-extinguish upon the de-energizing of electric power. The C-AD uses small amounts of flammable materials routinely in accelerator operations and experiments.

Due to the presence of a system for diverting radioactive liquid effluent to a hold-up pond, there are no environmental impacts due to release of contaminated water from the fire-protection water system. Water sprayed on radioactive equipment may become slightly contaminated, but would enter the sanitary system and be monitored before release. There are no significant amounts of combustible activated materials in the tunnels, rings, transport lines, intersection regions or beam lines, nor significant numbers of radioactive particles in smoke. Thus, there is no significant environmental hazard from a fire at the C-AD accelerators and target areas.

The detectors in experiments at the Collider contain larger volumes of flammable gases; the C-AD documented details of the hazards associated with these experiments in the Appendix 32 to the 1999 RHIC SAD. To mitigate these fire hazards, the experimental detectors have the following controls:

- Mechanical and electrical interlocks
- Flow restrictors
- Designs to industry codes and standards
- Fusing
- Over- and under-flammable gas-pressure protection
- Flammable gas detection, limits on flammable-gas volumes
- Fire detection
- Alarm and suppression systems
- Control of combustible loading
- Ventilation systems
- Safety committee reviews
- Experimenter training for emergencies
- Automatic inert-gas purging systems
- Control of ignition sources
- Work planning

There is no credible accident scenario at RRPL that would release sufficient quantities of chemicals or chemical vapors to cause other than localized consequences. Fire hazards are minimal due to the presence of a fire-detection system, the limited quantities of flammable chemicals, and the paucity of combustible materials.

There is the potential for small fires and explosions at the RRPL due to the presence of flammable chemicals, such as solvents, oxidizing- and reducing-agents, corrosives, flammable metals, and pyrophoric materials. There are ignition sources, such as soldering devices, a heat gun, and acetylene torches. The C-AD minimizes the fire hazard by restricting the quantity of chemicals in the area, providing safe storage for flammable chemicals in fireproof cabinets, handling flammable chemicals inside the ventilated radionuclide-fume-hood, and by maintaining good ventilation throughout the RRPL. The RRPL has a concrete floor. BNL constructed all hot boxes, fume hoods and the hot cell out of nonflammable materials and provided all with ventilation systems. Portable fire extinguishers are located around the RRPL. BNL protects the RRPL with automatic fixed temperature-rate-of-rise heat detectors. Alarms annunciate locally and at BNL's Fire/Rescue Headquarters and Police Headquarters.

4.19. Hazard Controls

The purpose of this section is to briefly summarize the various system features and administrative programs that help to control hazards or the minimize risk of various hazards.

4.19.1.Radiation Protection

The significant hazard at the C-AD facilities is ionizing radiation, and accordingly, C-AD plans operations within the DOE's dose guidelines. The C-AD uses a graded system of controls, such as shields, fences or barriers, locked gates, interlocks and procedures to match access restrictions with potential radiation-hazards that satisfy both the BNL's and DOE's requirements.

Although the Laboratory site is a limited access site, service personnel from off-site or BNL non-radiation workers may work near C-AD facilities or may traverse the complex. The BNL policy administratively restricts the dose to 25 mrem per year to such people. The C-A Department adheres to this policy by using shielding and interlocking radiation-monitoring devices that prevent radiation levels from exceeding set points.

The C-AD designed shielding for accelerators and accelerator facilities to permit access by appropriately trained personnel to work in areas adjacent to the beam enclosures, even with nominal inadvertent beam-loss. In locations where the C-AD expects the losses, such as outside the shielding near collimators or beam stops, physical barriers such as fences control access and minimize exposures. Depending on the area classification, the C-AD may lock these barriers and/or post them as Controlled Area, Radiation Area or High Radiation Area.

There is the potential of significant residual activity inside the accelerator enclosures at several locations, such as targets areas, collimators, injection regions, and beam dumps and scrapers. To work near these locations, the C-AD may remotely move shielding into place using a crane or a fork truck, thereby minimizing the potential dose to workers within an accelerator enclosure.

4.19.2. Permanent Shielding and ALARA Dose

The C-AD uses shielding to reduce radiation levels in occupied areas to acceptable levels, and describes their shielding policy in Appendix 10 of an archival SAD.

The C-AD analyzed shielding designs for all sections of their facilities, and designed the facilities with ALARA in mind. The C-AD verifies the design and optimizes shielding, as

needed, to help achieve an ALARA dose to facility personnel and facility users. The C-AD conducts periodic radiation surveys of normal operations, as well as low-intensity simulated, credible beam faults for new portions of the facilities or experiments. These surveys assure and independently verify the adequacy of the shielding and access controls.

The C-AD planned the shielding such that during normal operations doses rate at accessible outside surfaces of a shield are less than 0.25-mrem/h when averaged over a year. This average value is a guideline based on the ALARA design objective of less than 500 mrem per year; viz., assuming 100% occupancy at the shield face, a 2000-hour per year residence time yields the ALARA design-objective of 500 mrem. This objective is one-half the design objective stated in 10CFR835 § 835.1002 (b).

Since there are many ways to control access and residence-time by area designation, training and signage and since there dose rate falls with distance from the shield face, significantly higher shield-face dose rates are often acceptable provided C-AD controls access controlled and plans work.

4.19.3. Permanent Shielding Materials

The permanent bulk shielding materials for the C-AD facilities are primarily materials used at all existing accelerator facilities. For example, concrete, iron, and earth provide protection for personnel outside the beam tunnels, target stations, and beam intersecting regions. In addition, to satisfy BNL's capping requirements, the C-AD installs caps on the earth berms that surround significant beam loss locations to prevent leaching of soil-activation products, tritium and sodium-22, from contaminating the groundwater. In addition, the C-AD uses paraffin, borated paraffin, polyethylene, borated polyethylene, and lead for local shielding and in special circumstances. C-AD controls configuration does not allow changes in the shielding without review and approval by the C-AD's RSC.

4.19.4.Radiation Detection and Radiation Interlocks

At locations external and/or adjacent to beam enclosures where unlikely but possible beam loss may occur, the C-AD installs fail-safe interlocking radiation-monitors. This technique is standard practice at the DOE's accelerator facilities to maintain radiological-area classification compliance by providing a robust, rapid beam-inhibit if any monitor exceeds a preset interlock limit. These radiation monitors are part of the QA1 ACS used for personnel protection.

The C-AD calibrates interlocking radiation monitors annually. Monitors, called Chipmunks, are tissue-equivalent ionization chambers that measure the dose-equivalent rate, in mrem per hour, from pulsed, mixed-field neutron- and gamma-radiation. Chipmunks as area-radiation monitors for personnel protection are located throughout the facility in accessible areas. They interlock the beams off should radiation-levels exceed the limits defined by the RSC. The operation of Chipmunks with interlocking capability is fail-safe. Loss of power results in beam off for interlocked Chipmunks, and/or an alarm in the Main Control Room (MCR) in Building 911. The C-AD operators occupy the MCR around-the-clock during operations. Additionally, the Chipmunk uses a built-in keep-alive radiation source to monitor for failures; failure to detect properly these built-in sources will trigger an alarm in the MCR and/or an interlock when appropriate.

The interlock system is an isolated hard-wired system. The C-AD uses relay logic and PLCs to activate or deactivate a device such as a beam stop or magnet's power-supply to prevent the beam from entering the fault area.

Fixed-location area-radiation monitors, such as Chipmunks, provide real-time dose information at various locations along the beam's path, and in the roadways, support areas, and experimental buildings that surround the accelerators. The C-AD logs the dose rate data every few minutes. FSS routinely reviews the data. The C-AD's RSC approves the locations of all radiation-monitoring instruments.

The C-AD uses other area monitors to assess the long-term integrated dose in areas accessible to the public and other individuals not wearing personnel dosimeters, mounting TLDs identical to those worn by radiation workers in these locations. The dose recorded by these TLDs is indicative of the exposure of a person spending full time at that location. The C-AD attaches area TLDs to bottle phantoms to simulate the shielding of the torso.

4.19.5.Control of Radioactive Materials and Sources

When the beam is off, the radiation hazard comes from activated material and sources. Activated material may be a direct radiation hazard, and may have removable contamination. The C-AD treats all known or potentially activated items as radioactive material, and handles them in accordance with BNL's Radiation Control Manual requirements. Workers place unlabeled radioactive material that is accessible to personnel in appropriately posted radiological- or radioactive-materials areas. RCTs survey suspect radioactive material before its release. The C-AD further controls materials based on the survey results, and uses process knowledge to certify that items removed from radiological areas are free of radioactivity. The C-AD packages radioactive items with removable contamination before moving them from posted radiological areas. Workers whose job assignment involves working with radioactive materials receive documented training as radiological workers. The C-AD controls sealed radioactive sources and handles them in accordance with the BNL's Radiation Control Manual, and the C-AD Operations Procedure Manual. The C-AD inventories and leak-tests every six months all regularly-used accountable sealed radioactive sources.

4.19.6. Portable Radiation Monitors

The C-AD only allows RCTs to use portable radiation-detection instruments to measure the radiation fields for radiation protection. These measurements establish and confirm area radiological postings. Instruments used are appropriate for the type and energy of the expected radiation, and C-AD assures calibration of instruments in accordance with these requirements.

4.19.7. Frisking Instruments

The RCTs conduct routine contamination-surveys to verify that contamination is not a problem. The C-AD uses instruments to frisk personnel exiting posted areas that might have removable contamination.

4.19.8. Personnel Dosimetry

All radiation workers wear appropriate TLDs and self-reading dosimeters as required by BNL's Radiation Control Manual while working in areas posted for radiation hazards. The C-AD regularly exchanges dosimeters for processing by a DOELAP-accredited laboratory. BNL maintains records of the doses recorded by these dosimeters; these records are available to the individuals monitored.

4.19.9. Access Controls Systems

The C-AD classifies the ACSs as QA level A1 according to the C-A QA plan, but the Department allows certain components to have a lower classification because failure is to a safe state, or critical parts are redundant. The C-AD Access Controls Group installs industrial-grade components only. They label parts that pass incoming tests as A1 or A2 and place the labeled parts in a controlled storage areas. The Group maintains documentation for these acceptance tests.

The basic design principles of the access control system are as follows:

- Either the beam is disabled, or the related security area is secured
- Only wires, switches, relays, PLCs and active fail-safe devices, such as Chipmunks, are used in the critical circuits of the system
- The PLC or relay-system is fail-safe
- Areas where radiation levels can be greater than 50 rem/h require redundancy in disabling the beam, and in securing the radiation area
- If a beam fails to be disabled as required by the state of its related security area, then the upstream beam would be disabled; that is, the system has backup or reach-back

Very High Radiation Areas are those areas that enclose primary beam. Very High Radiation Area hardware requirements comply with the BNL's Radiation Control Manual. The C-AD's RSC requires 1) locked gates with two independent interlock systems, 2) fail-safe and redundant radiation-monitors or other sensing devices, 3) indicators of status at the facility in the Main Control Room, 4) warning of status change, and, 5) emergency stop-devices within potential Very High Radiation Areas.

The RSC reviews interlock systems for compliance with requirements in the BNL Radiation Control Manual, SBMS requirements, and C-AD OPM procedures. A Representative of the BNL Radiological Controls Division is a member of the C-AD's RSC that defines the design objectives of the security system, and approves the logic diagrams for relay-based circuits and logic diagrams or state tables for PLC-based circuits. Cognizant engineers sign-off on wiring diagrams, and the C-A's Chief Electrical Engineer approves each diagram. The C-A Access Controls Group maintains design documentation.

The Access Controls Group conducts a complete functional check of all components of security system at an interval required by the BNL Radiological Control Manual. The Group checks the status of each door-switch on a gate, and each crash switch in the circuit. They check the interlocks, and the off-conditions for all security-related power-supplies to those magnets that may act as beam switches, and all security-related beam-stops. They check every component in a security circuit. As they test, they fill-out, initial, and date the security system test-sheets obtained from the C-AD's OPM. They maintain all test records as required by the C-AD OPM.

4.19.10. Control and Use of Hazardous Materials

BNL designed the Chemical Management System (CMS) to ensure that workers know about the chemical hazards in their workplace. The C-AD maintains the CMS to comply with OSHA- and EPA-regulations on hazardous-chemical communications. This program includes the provisions for policy, training, monitoring exposure limits, handling, storing, and for labeling, and equipment design, as they apply to hazardous materials. Included in the hazardous-material protection program are the procurement, usage, storing, inventory, and access to the hazardous materials, along with housekeeping and chemical-hygiene inspections of the C-AD facilities. All BNL's general employees receive appropriate general Hazard Communication training. BNL lists the requirements for general hazardous-materials communication and for special materials, such as beryllium, mercury, and biological materials in the SBMS; and C-AD folds these requirements into departmental procedures. BNL provides training on these requirements, and maintains records of the training program on the BNL BTMS. The C-AD ensures that staff and experimenters potentially exposed to hazardous chemicals receive appropriate job-specific training at the time of initial assignment, and whenever a new hazard is in the work area. The system of work controls at the C-AD requires enhanced work planning for work with certain hazardous materials, for example, beryllium, to assure that adequate hazard controls are in place, and completion of required training before work with hazardous materials begins.

The use of flammable liquids is minimal. For example, the anticipated use at the NSRL is less than one quart in each laboratory space as a solvent. Any use of flammable liquids follows BNL SBMS requirements.

4.19.11. Electrical Safety

BNL SBMS lists requirements for electrical safety. The C-AD covers electrical bus to reduce/prevent electrical hazards. In beam-enclosure areas, C-AD does not allow exposed conductors. The MCR operators ensure that all power supplies that power devices inside a beam enclosure are locked out before they allow entrants into it. In cases where workers are required to work on or near a specific device in an enclosure, they must apply their own lock-and-tag to the power supply or electrical disconnect for that specific device.

In some cases, the C-AD allows work near magnetic elements while powered, during which the Operations Coordinator maintains appropriate control over access. Work planning, Electrical Work Permits and training requirements for such entrants address concerns for inadvertent contact with powered conductors and exposure to magnetic fields.

4.19.12. Lockout/Tagout Program

C-AD has specific lockout/tagout procedures in the C-AD OPM that comply with OSHA and NFPA requirements. All workers train in lockout/tagout procedures at a level consistent with their position.

4.19.13. Safety Reviews and Committees

C-AD uses standing safety committees to review programmatic modifications and new programmatic equipment throughout their design, construction, commissioning, and operation to focus expertise on safety, environmental protection and pollution prevention. These committees and their reviews help maintain configuration control. Chapter 3 of this SAD details each committee's authority and responsibility.

4.19.14. Training

Worker training and qualification is an important part of the overall ESH plan for the C-AD; the C-AD OPM lists qualifications in appropriate procedures and the BNL BTMS keeps track of training records. All C-AD personnel and users require an appropriate level of training to ensure their familiarity with possible hazards and emergency conditions.

The C-AD trains workers in site-specific radiation safety, electrical safety, ODH and emergency response procedures at a level consistent with their positions. The C-AD assigns under a graded approach the number and type of training sessions commensurate with the worker's responsibilities and work-area hazards. They use the up-to-date record of worker training in the BTMS database to monitor workers' qualifications. The C-AD allows radiation worker access to qualified individuals only, except in emergencies. C-AD reviews C-AD specific training-procedures and C-AD specific course-documentation and updates these documents periodically.

4.19.15. Personal Protective Equipment

C-AD provides special clothing to protect workers exposed to electrical hazards and hazardous materials, including chemicals and radiation; a variety of types of clothing is on-hand to meet all expected hazards.

The C-AD provides respiratory protection to workers exposed to unacceptable levels of airborne hazardous materials, including chemicals, oxygen-deficient atmospheres, and radioactive materials. C-AD provides escape packs for ODH Class 1 areas. C-AD selects respiratory protection equipment per OSHA 29 CFR 1910.134 and BNL's SBMS requirements.

4.20. Significant Environmental Aspects and Impacts

In support of Brookhaven National Laboratory's broad mission of providing excellent science and advanced technology in a safe, environmentally responsible manner, the C-AD commits to excellence in environmental responsibility and safety in all operations.

To meet this commitment, the C-AD continuously reviews the environmental aspects of its operations to identify opportunities for, and accomplish waste minimization and pollution prevention. This process began in 1988 with the development of formal environmental design guides and a design-review process. More recently, C-AD further formalized the processes under the guidelines of ISO 14001. The environmental management system (EMS) emphasizes compliance, pollution prevention, and community outreach. The following environmental aspects are significant to C-AD activities:

- Regulated industrial waste

- Hazardous waste
- Radioactive waste
- Mixed waste
- Atmospheric discharges
- Liquid discharges
- Storage/use of chemicals or radioactive material
- Soil activation
- PCBs
- Environmental noise
- Water consumption
- Power consumption
- Sensitive/endangered species and sensitive habitats
- Historical contamination
- Material recycling

The BNL's environmental policy is the foundation on which C-AD manages significant environmental aspects and impacts. The EMS consists of the following elements, the details of which are given in the C-A Operations Procedure Manual:[175]

- Environmental policy
- Planning
- Environmental aspects and impacts
- System for determining legal and other requirements
- System for defining objectives, targets and programs
- Environmental management programs
- Implementation and operation
- Structure and responsibility
- Training, awareness, and competence
- Communication
- Environmental management system documentation
- Document control
- Operational control
- Emergency preparedness and response
- Checking and corrective action
- Monitoring and measurement
- Nonconformance and corrective and preventive action
- Records management
- Environmental management system audit
- Management review

The C-AD reviewed all waste streams and performed a process evaluation denoting all material inputs and outputs of materials and wastes for all their existing C-AD processes. The C-AD undertakes a process evaluation for each new, significant process before commissioning for operations.

[175] Environmental Management Program Description

4.21. Hazard Reduction Associated With Waste Generation and Handling

By minimizing pollution, the C-AD reduces hazards associated with handling, packaging, treating, and disposing of wastes generated during operation and modification of a facility. The C-AD approach to pollution prevention is to address it during the design- and construction-phase of projects. The C-AD tries to minimize or eliminate the anticipated costs associated with generating hazardous and mixed waste, as well as treating and disposing of wastes and the consuming resources in all the facility's life-cycle phases: construction, operation, closure, and decommissioning. Dollars spent during the design phases ensure significantly reduced total costs over the life of the facility, thus making more funds available for science.

4.22. Fire Detection, Egress, Suppression, and Response

The C-AD determined the basis of design for fire detection, egress, suppression, and response in individual fire hazard analyses (FHA) for each facility. C-AD keeps current FHAs on the C-AD Web. The C-AD facilities comply with the DOE's fire-protection guidelines, and with NFPA requirements for the most part; however, the C-AD identified Life-Safety Code compliance issues in older facilities built in the 1950s and 1960s before these requirements were in place. BNL is addressing these issues as time and funding permit.

The C-AD fire-detection/fire-protection systems integrate with the BNL site-wide system. The C-AD protections include automatic fire-detection, automatic suppression systems, and rapid-response capability coverage by the BNL Fire Department. C-AD installs sprinklers as required. Because of the low flammability of the magnets, power -and control-cables and the beam-diagnostic equipment in the tunnels and rings, they do not have automatic fire suppression systems, except for certain areas. They do have fire standpipes. The C-AD installed manual- and automatic-fire detection and alarm-initiation devices throughout the facility. Where needed, the C-AD added supplementary smoke and/or heat detection devices with pressure-sensitive sensors, flammable-gas detectors, or other advanced detection-devices such as high-sensitivity smoke detection, HSSD. The C-AD has portable fire extinguishers for manual firefighting efforts by trained staff. Fire alarms alert MCR and the BNL Fire Department, Building 599, and at BNL Police Headquarters, Building 50, thus providing continuous coverage for rapid fire-response. Roadways around the facility help protect it from surrounding wildfires. The building roofs are non-combustible metal, and do not ignite from burning ash from brush fires.

The means of egress for occupancies is in accordance with NFPA 101. Enclosure exhaust fans are located at tunnels and rings to remove smoke rapidly.

4.23. Routine Credible Failures

Beam losses in C-AD accelerators and experimental enclosures sufficiently attenuate ionizing radiation in the bulk shielding for expected routine operation. Shielding meets requirements for permissible exposure to radiation workers, non-radiation-trained workers and members of the public during normal machine operations. Present shielding designs reduce all normal radiation levels to well below the DOE's ALARA guidelines.

Exposure to nearby facilities is less than 25 mrem per year and only a small fraction of 5 mrem per year at the site boundary, which are the Laboratory's guidelines for radiation exposure

for nearby facilities, and the site boundary, respectively. The C-AD reduces radiation exposure to maintenance workers through designing equipment to simplify maintenance, and by selecting materials to minimize failures. In particular, equipment at high loss-points such as targets, beam dumps, collimators, beam injection- and beam extraction-points receive detailed examination to assure that C-AD keeps workers' radiation exposure as low as reasonably achievable.

There are no significant quantities of dispersible gaseous or liquid radioactive materials, except for the radioactivity induced in cooling water. In the primary beam-line areas where the cooling water might escape confinement, e.g., a hose break, water detection mats underneath the magnets alarm and alert the Watch personnel. The C-AD trains them to confine, clean up, and report water spills to management. Experience indicates that up to several hundred gallons may leak onto the impermeable concrete floor. The C-AD samples spilled-water before releasing it to a waste stream, or allows it to evaporate in place. There are no off-site threats to the public.

4.24. MCIs, Credited Controls and Credited Control Supports

This section describes the bounding analysis scenarios for credible C-A facility incidents, and the associated Credited Controls and Credited Control Supports to prevent such incidents.

4.24.1. MCI for Beam Fault Incidents and Credited Controls

Not all protons stop at the targets or at well-defined loss locations; some may be lost during transport. The C-AD meets its design goal of no more than 20 mrem per full-fault event in an uncontrolled area by employing proper shielding, radiation monitoring and interlocking systems.

Based on archival operating records, beam faults occur when magnet power fails, when beam tunes fail, or when mis-aligned beam-line components enter the beam path. Operators in the Main Control Room detect the problem immediately upon radiation- alarm trips, and from the resultant interlocks that turn the beam off. Operators investigate these events according to written procedures, correct the problem if appropriate, record the event for management's review, or discontinue operations if appropriate. Since these events run a few seconds or less, and their frequency is only several times during an annual running period, the off-site radiation impact is negligible.

Experience at C-AD shows that using 1) thick shielding, 2) fences and barriers at the berm and other areas, 3) ALARA beam-tuning procedures, 4) radiation alarms in MCR and procedures that call for response to radiation alarms, sufficiently protect personnel in locations not directly monitored by radiation monitors.

Based on the system for formal design review by C-AD Committees, the formal BNL and C-AD training programs, the formal C-AD operations procedures, the formal C-AD quality assurance programs for equipment, and the extensive use of shielding and access controls, the C-AD considers the probability of a "catastrophic" radiation exposure extremely improbable. That is, the probability for this consequence is indistinguishable from zero.

Employing radiation area monitors and interlocks maintains worker exposures well within the limits established by the DOE. The C-AD considers as remote the probability of a significant inadvertent radiation exposure, and not likely to occur within the life cycle of the C-AD facilities. The C-AD controls routine maintenance and operations; they do not exceed the DOE's annual radiation limits. The RHIC Beam Loss Scenario assumes that an uncontrolled loss

of a beam at full energy is possible at a location other than at the intended loss point, the Beam Stops at 10 o'clock. For a bounding Collider fault with the ASE-limited intensity proton beam, the C-AD assumes that for most locations in each ring, half the beam, viz., the equivalent of 1.14×10^{13} 250 GeV protons, is lost at a point, and the other half distributed over an extended length of magnets. The entire beam could be lost at an aperture-defining location, including the high β quadruples. At the superconducting Tevatron at Fermi National Laboratory, the entire full-energy beam was lost twice in approximately 10 years of running, but both times, the loss distributed over a long portion of the machine. The maximum credible loss defined here therefore is conservative. The C-AD estimates the maximum dose from a bounding fault to an individual standing at a typical location on the berm at several hundred mrem. The C-AD designates the RHIC berm area and roadway as Controlled Areas during RHIC operations. They could not treat this area as uncontrolled because the entire stored beam in the Collider is lost instantly, and the weight of additional shielding over RHIC tunnel is limited and does not reduce the dose below 100 mrem. Stevens estimated uncertainties in calculating the dose potential through a series of fault studies.[176] The C-AD believes the maximum credible Collider fault has no adverse impact on the public since the area is a Controlled Area. Similar analyses shows the same type of credible incident for other accelerators at C-AD, although, the RHIC beam loss is the MCI.

Thus, the beam limits energy and number of particles in RHIC, the beam power in other accelerators, and the operability of the ACSs during beam operations are Credited Controls. The following are Credited Control Supports for the radiation hazard:

- Shielding in place
- Functionality of the ACSs to prevent access and to remove beam
- Configuration control of interlocking radiation monitors
- Use of calibrated radiation monitors in the ACS
- A system to prevent the high intensity H^- source from transporting beam to RHIC
- Functional testing of the ACSs
- Visual inspection of shielding and soil caps prior to operations

4.24.2.MCI for Fire Incident and Credited Controls

The objectives of presenting no threats to the public health and welfare or undue hazards to life from fire are satisfied. The designs of all C-AD facilities comply with the "Life Safety Code" (NFPA 101) and with the specific requirements of the Occupational Safety and Health Standards (CFR29, Part 1910) applicable to exits and fire protection.

The C-AD uses flammable/explosive gases according to NFPA codes and standards applicable to experimental installations. Gases are stored in compressed gas- cylinders that meet the DOT's specifications. The C-AD prohibits large quantities of gas in experimental areas. There are no off-site threats to the public should a cylinder fail.

The C-AD designed experiments with an "improved risk" level of fire protection, fitting them with fire detectors and fire protection systems where appropriate. Combustible loading of the primary beam lines consists of magnets, power cables, control cables and beam diagnostic equipment. None of the materials are highly flammable, and with the possible exception of

[176] A. J. Stevens, C-AD/ES&F Technical Note No. 156, Summary of Fault Study Results at RHIC, July 12, 2000

legacy cables that are being removed, all are expected to self extinguish upon de-energizing of electric power. Induced radioactivity deeply entrains in magnets and concrete shielding, and is not dispersible in a fire. There are no off-site threats to the public from a fire.

The personnel risks associated with the fire hazard are acceptable considering the type of building construction, the available exits, the fire- detection systems, the fire- alarm systems, and the relative fire-safety of the components and wiring. Emergency power and lighting is available in accordance with fire industry standards.

The DOE established limits of $1,000,000 for a Maximum Possible Loss and $250,000 for a Maximum Credible Loss, mandating the installation of automatic suppression-systems. The C-AD facility's designs meet these criteria.

Distances to exits in the C-AD facilities do not present a problem. The C-AD provides engineered venting for smoke and heat or by building configuration to ensure that smoke does not overtake personnel before they have time to reach exits. Because it may take time in the large RHIC tunnel to find a source of fire or smoke, the C-AD established a Credited Control to exhaust smoke when the tunnel has occupants. For a Credited Control Support, C-AD may allow personnel to occupy the RHIC tunnel enclosure if they can manually activate the exhaust fans.

Because the volume of flammable gas at STAR and PHENIX is much larger than at a standard industrial facility, the C-AD established a Credited Control that requires flammable gas detection in the Intersecting Regions for STAR and PHENIX be operational during running periods with flammable gases in experimental detectors.

4.24.3.MCI for Electrical Incident and Credited Control Support

The electrical systems and equipment have been in use at C-A facilities for many years. This statement does not minimize the inherent dangers; rather, it indicates that the technical personnel are experienced on with circuits and devices. Additionally, they are qualified to work on these systems. The C-AD ensures adequate training and PPE for very engineer, technician, and electrician expected to work on the facility's equipment. The training includes an awareness of potential hazards and knowledge of appropriate safety procedures and emergency response plans. Training is documented, and a list of authorized personnel is kept on a network electronic database (BTMS) and available to supervisors.

The C-AD's workers are familiar with the types of electrical hazards related to the accelerators and experimental areas. The C-AD installs all reasonable safety features in, and on the electrical equipment. The groups that maintain, repair, test, and operate the equipment have the knowledge, tools, and experience to perform safely. The C-AD does work planning, including electrical safety procedures, working hot permits, and job-safety analyses, to help workers adhere to the safe practices mandated by OSHA and BNL. Periodic retraining improves the safety margin. The C-AD considers the potential risk for a serious electrical shock at a level currently accepted throughout industry and no Credited Controls were required.

Since an arc in the superconducting circuit for RHIC magnets can cause damage to nearby cryogenic piping that may result in an uncontrolled release of helium, C-AD uses a Credited Control Support to limit the frequency of that initiating event when the tunnel has occupants. Thus, individuals may enter the RHIC tunnel when the helium temperature in magnets is below 40 K as long as the RHIC magnet main power supplies are limited to supply a current $\leq$530 amperes. C -AD accomplishes this restriction by enabling the over-current trip circuitry, or by locking out the power supplies.

4.24.4.MCI for ODH Incident and Credited Controls

Following a review of the magnet failures at CERN's LHC in September 2008 in which an electrical arc produced a hole in the cryogenic piping, the C-AD began to review the potential of this type of event at the RHIC. Like CERN, the RHIC cools its magnet system with LHe and the cryogenic piping is proximate to a superconductor that may have about 100 MJ of magnetic-field energy, energy that under the right conditions can transform into an electrical arc and damage the piping. Revisiting this postulated accident, C-AD found the original calculation of He release rate used as input for the ODH analysis at the RHIC underestimated the He release rate and the total release. Unlike CERN in 2008, C-AD uses many voltage taps to ensure electric current safely leaves the superconductor should a voltage develop, at the milli-volt level, in the superconducting circuit. C-AD determined that the RHIC voltage-tap system reduced the likelihood of a CERN-like incident at RHIC.

The original assumption was that the LHe in a single sextant's magnet loop instantaneously released into the magnet string's sextant vacuum vessel, a non-mechanistic assumption used to simplify the calculation. A constant density heat-up of the He in the vacuum vessel then occurs, and within about 50 seconds, the vacuum-vessel's pressure reaches the relief valves set point of ~1.3 atm. Once the He release from the vacuum vessel began, the process was a constant pressure expansion of the He in the vacuum vessel with the excess He being relieved into the RHIC tunnel, causing the ODH situation. The maximum He release-rate into the tunnel under these original assumptions was ~12.5 Kg/s.

While reviewing the LHC accident, the engineer familiar with the original calculation for RHIC tunnel recognized that limiting the total LHe mass to a single sextant magnet line was a non-conservative assumption. Because the entire magnet string in a RHIC ring is connected, the LHe inventory of the entire ring is available to leak out of a magnet-line break into the affected sextant vacuum vessel, not just the LHe inventory of the affected sextant. Correcting this analytical assumption error gave a significantly larger He inventory, and He vent rates into the RHIC tunnel that are up to twice the originally computed rates. The ODH analyses showed that the RHIC tunnel's ODH classification was ODH 1 under these conditions instead of ODH 0.

A more realistic model of the release of the LHe into the affected sextant vacuum vessel takes credit for the flow resistance from system piping on the escaping LHe from the failed magnet line. The vacuum vessel does not immediately fill with the leaked He; it fills at a rate controlled by the system's flow resistances. However, the updated assumptions and calculations show the oxygen-deficiency potential for the RHIC tunnel at less than 40 K is ODH 1. The C-AD requires training, PPE, and Personal ODH monitors for work in the RHIC Ring tunnel when the magnet system is less than 40 K.

Thus, the requirement for engineered systems (ODH alarms and interlocks to ventilation fans) to be in place in the RHIC tunnel and support buildings is a Credited Control. The operability of ODH exhaust fans, the operability of ODH interlocks and alarms, the requirements for entrants to carry 5-minute escape packs, the annual calibration of ODH sensors and the annual testing of fans and louvers are Credited Control Supports.

4.24.5.MCI for Dispersible Radioactive Materials and Credited Controls

This postulated accident shows the potential consequences at the BNL site-boundary of a release of all volatile radionuclides from a set of irradiated BLIP targets, two RbCl, and one

Ga/Nb. The C-AD assumed an outdoor ground-level release since release inside B931 or B801 would result in lower site-boundary doses. Indoor releases would be through an elevated stack after HEPA- and charcoal-filters, and after the plating out of the volatiles on the surfaces of the building and ductwork. C-AD determined the consequences of release from multiple target sets during transport by multiplying results from a single target set by the number of target sets.

The C-AD developed models of the site boundary's ground- and stack-release-atmospheric dispersion models for all accident analyses from the BLIP and the RRPL.[177] For this case, the C-AD assumed the ground-level release occurs near BLIP because it is closest to the BNL's site boundary. The DOE's Order on Accelerator Safety specifies that if the site boundary dose is less than 1 rem, the DOE field office is authorized to approve the ASE.

The calculation conservatively assumes a 5% ground-level meteorological dispersion coefficient of 1.4×10^{-4} sec/m^3 and 100% of volatile radionuclides released.[178] The result for the site boundary dose is ~3 µrem per target set after the routine 7-day delay from end of irradiation to start of transport. Even assuming no delay from end of irradiation to initiation of target transport, the dose at the site boundary would be less than 80 µrem per target set. Thus, the consequences are extremely small and much less than 1 rem.

The C-AD judges the likelihood of an accident that causes dose to workers from release of targets during shipment between B931 and B801 as less than 10^{-4} per year. The consequences although high, would not be life threatening. A potential credible accident would likely result in a worker dose of less than 5 rem. The majority of this dose would be from direct radiation from the irradiated targets with minor dose-contribution from immersion in a cloud of radioactive gases, and inhalation of the volatile radionuclides. Thus, the C-AD determined that Credited Controls were not required for transport of BLIP Targets.

Airborne radioactive emissions must meet federal requirements and be less than 10-mrem/y to an offsite individual. C-AD established a Credited Control to meet this requirement during beam operations at BLIP. Thus during BLIP beam operations, C-AD must perform continuous monitoring for radioactive airborne emissions (e.g., particulate, tritium and short-lived gaseous activity) that are anticipated to exceed 0.1 mrem per year to the EPA-defined Maximally Exposed Individual.

Since airborne radioactive material can disperse into work areas at the BLIP and at the TPL if the ventilation systems are inoperable or inadequate, C-AD established Credited Controls for these emissions. Thus at BLIP and during BLIP beam operations, the tank-hotbox exhaust-ventilation-system must be operable. At the TPL and during processing of radioactive materials, the TPL hot cells, hot boxes, radioactive fume hood and their associated ductwork must have negative pressure between these facilities and the room and outdoors. Credited Control Supports at TPL and BLIP include the following:

- RSC reviews changes to BLIP beam characteristics and BLIP targets
- TPL and BLIP shielding in place during operations
- Operable beam radiation monitor and target tank low-water level interlocks during beam operations at BLIP

---

[177] R. Karol, B801 Site Boundary Ground level Atmospheric Dispersion Model, October 28, 2010; R. Karol, B801 Stack Release Site Boundary Atmospheric Dispersion Model, October, 29, 2010; R. Karol, BLIP Site Boundary Ground level Atmospheric Dispersion Model, November 19, 2010; R. Karol, BLIP Stack Release Site Boundary Atmospheric Dispersion Model, November 4, 2010

[178] R. Karol, BLIP Target Transportation Accident – Site Boundary Dose Calculation, January 3, 2011, Revised June 9, 2011

- Operable low-flow ventilation system alarm at BLIP during operations
- At least two operable building exhaust fans during processing operations at TPL
- Two operable exhaust fans in the TPL hotboxes and hot cells during processing
- One operable exhaust for the TPL fume hood during processing operations

C-AD may disperse radioactive material into groundwater by allowing rainwater to percolating through activated soil. Thus, C-AD has a Credited Control Support to install caps over soil to protect groundwater if C-AD determines the annual activity concentration of sodium-22 in leachate might exceed 25% or tritium in leachate might exceed 5% of the Drinking Water Standard. C-AD employs an additional Credited Control Support to perform at least one and in some cases two visual inspections of caps each year to ensure that they are in place and functional.

4.25. Risk Assessment to Workers, the Public, and the Environment

4.25.1.Radiation Risks

The routine radiation dose to workers is well below the DOE's regulatory limits of 10 CFR 835. Experience shows the average exposure of C-AD's radiation workers was about 30 mrem per year in the 1990, and much less than that after 2004. The last year for the high-intensity, high-energy fixed target program was 2002 in Building 912 and 2004 for g-2, and dose to individuals and collective dose significantly dropped when running only the nuclear physics- and NSRL-programs. The risk to a C-AD radiation worker is small, and much less than that allowed by the dose limits. Figure 4.25.1 illustrates the decline in collective dose at C-AD. The risks to the public are an extremely small fraction of workers' risk.

Worker doses, even including the maximum credible beam-fault dose on a frequent basis, would not cause deterministic effects, such as burns or tissue damage unless an individual were in the beam enclosure during operations. The ACS, a Credited Control, assures that such irradiations are not credible.

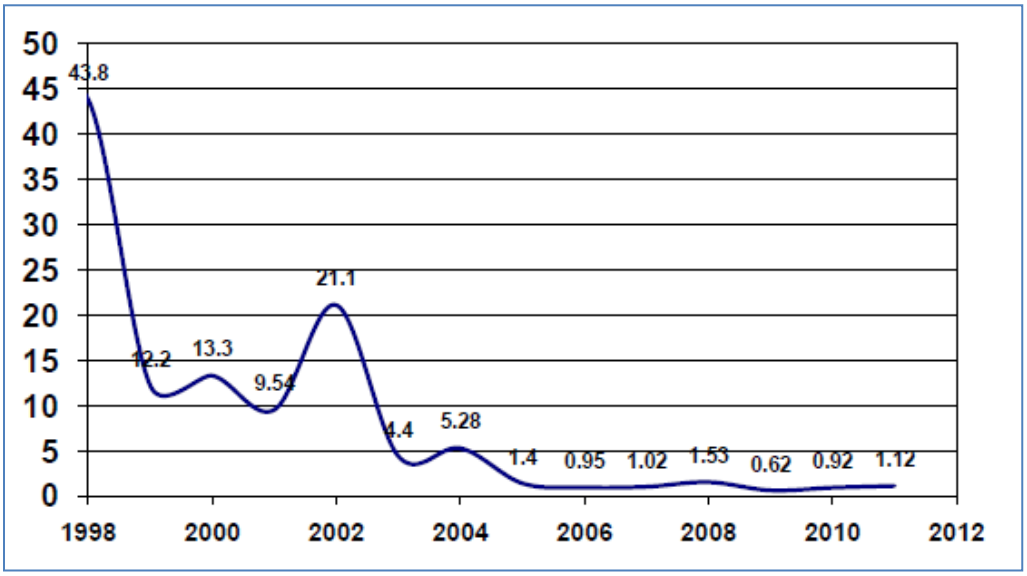

Figure 4.25.1 Decline in Radiation Worker Collective Dose (Person-Rem)

4.25.2.Infectious Microorganism Risks

These risks are present at the NSRL. Biological safety cabinets (BSCs) are the primary means of containment developed for working safely with infectious microorganisms. This equipment, located in cell rooms C1 and C2 of the Support Laboratories in Building 958, is appropriate for any work done with human-derived blood, body fluids, or tissues where the presence of an infectious agent may be unknown. Class II Type A BSCs protect personnel, the environment, and product. Airflow draws from the operator into the front grille of the cabinet, affording personnel protection. In addition, the downward laminar flow of HEPA-filtered air protects samples by minimizing the chance of cross-contamination along the cabinet's work surface. Because the cabinet's air exhaust passes through a certified exhaust HEPA filter, it is contaminant-free, and may be re-circulated back into the laboratory, i.e., the type of BSC employed at NSRL's cell rooms. CDC standards for BSC testing require an annual test, which includes annual efficiency tests, a smoke test, and air-velocity test. The BSC must maintain a minimum calculated or measured average inflow velocity of at least 75 linear feet per minute at the cabinet's face opening.

4.25.3.Environmental Risks from Radiation

The only credible risk to the environment is groundwater contamination with tritium. A spill of radioactive cooling water from a failed pipe or hose or an activated soil cap failure that would allow rainwater to leach the contamination into the aquifer, causes groundwater contamination with tritium.

The C-AD instituted an extensive groundwater-monitoring program to verify the effectiveness of soil caps and soil-cap maintenance. BNL verifies groundwater quality down gradient of actual or potential soil activation areas by periodic sampling of groundwater-surveillance wells. BNL tests groundwater samples for tritium and sodium-22 to verify that the soil caps effectively prevent rainwater infiltrating activated soil shielding. BNL evaluates the detection of unexpected levels of tritium and/or sodium-22 in groundwater in accordance with the BNL Groundwater Protection Contingency Plan.

The C-AD's operating procedures, periodic sampling of onsite drinking water for tritium, extensive groundwater monitoring and the long delay times from spill to the location of an onsite or offsite well preclude the possibility of any worker or member of the public from drinking radioactive groundwater.

4.25.4.Environmental Risks from Biological Materials

There is no credible risk to the environment from airborne releases from the NSRL animal rooms (A1 and A2) in the Support Laboratory, which are Biosafety Level 2. The NSRL animal laboratories have HEPA filters installed in the room exhaust and in the room re-circulation lines. The C-AD tests the efficiency of the HEPA filter annually.

From a regulatory standpoint, ventilation and exhaust systems for laboratory operations; i.e., lab hoods, are exempt from New York State emission source permitting- requirements.

4.25.5.Fire Risks

Based on the extensive use of fire protection, the appropriate location of exits and the use of emergency ventilation-exhaust systems, high- or medium-consequence levels are extremely unlikely. Thus, the fire risk is acceptable.

The C-AD documents the maximum credible fire loss in each C-AD facility in the Fire Hazards Analysis (FHA) for each facility.

4.25.6.Electrical Risks

Based on the use of formal C-AD electrical safety procedures, use of PPE, working hot permits and job safety analyses, high or medium consequence levels are extremely unlikely. Thus, the risk is acceptable.

4.25.7.Injury Risks

4.25.8.

Based on the use of formal occupational safety management programs such as ISM and OHSAS 14001, the risk of injury is low. There is about 550 C-AD / BNL employees assigned each year at C-AD and about 1100 users at the experimental areas. Experience shows the average risk of injury to the workers at C-AD has been declining for decades and is consistent with, or below the DOE-wide averages for research, services, or production operations, as shown in Figure 4.25.7.

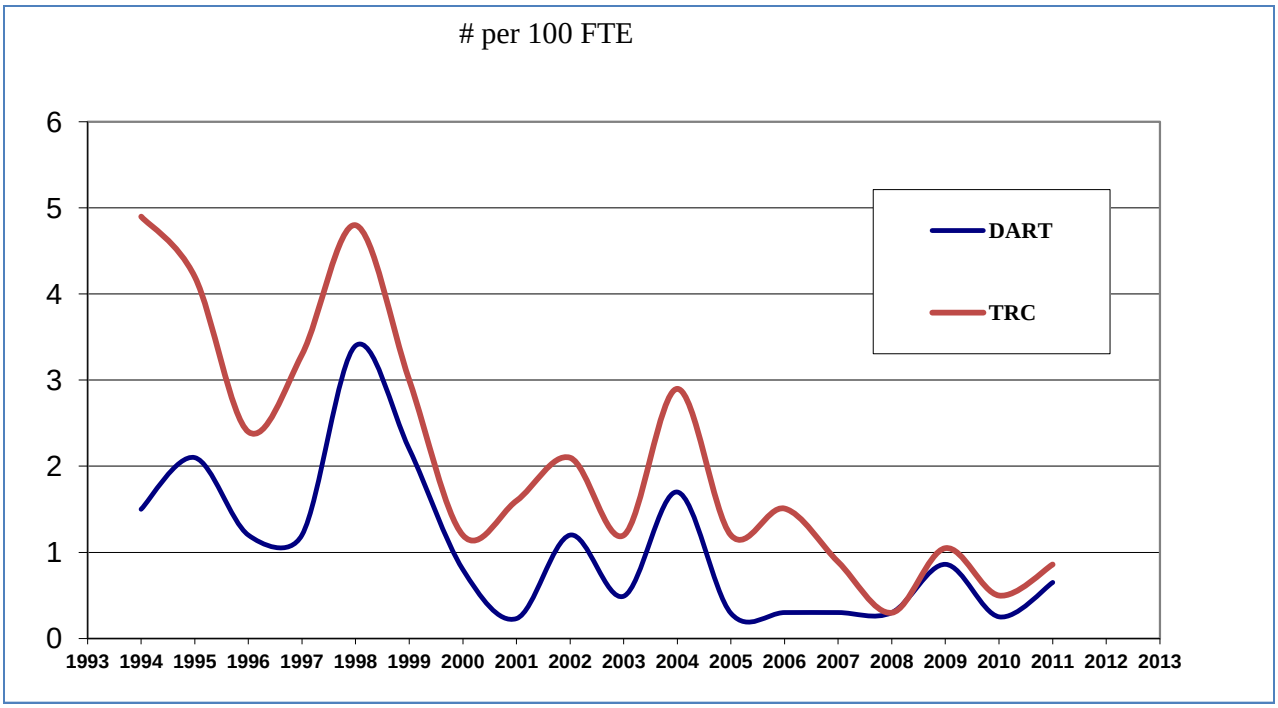

Figure 4.25.7 Annual DART and TRC Rates at C-AD

4.26. Professional Judgment Issues

The C-AD initially screened their accelerator- and experimental-facility's hazards using qualitative engineering judgment. The C-AD's engineering-, operating-, and safety-staff has many years of experience with BNL accelerators and experiments. This experience influenced the hazard analyses of Appendix 1.

Experience also influenced the choice of conservative maximum hourly routine and faulted beam-energy limits used as the bases for the shielding, and ALARA safety analyses. The C-AD verifies these judgment issues through independent beam-fault studies.

4.27. Methods Used in Evaluation of Radiological Hazards

Techniques employed in the evaluating radiological hazards include using empirical formulae,[179,180,181] and the Monte Carlo Programs MCNPX[182] and CASIM.[183] The C-AD has used CASIM satisfactorily for many years at energies above 10 GeV, and has extensively compared it to MCNPX at energies above 2 GeV.[184] The C-AD does not use CASIM directly for low-energy neutron transport. It overestimates neutron flux in the very forward direction.[185] The MCNPX probably is the most widely used neutron-transport Monte Carlo code. Several MCNPX calculations showed excellent agreement with empirical labyrinth formula.[186]

Past measurements made at the C-AD accelerators at approximately 90 degrees to the beam paths show that dose equivalent and activation calculations are overestimates. C-AD regards these calculations as upper limits.[187]

The MARS code system is a set of Monte Carlo programs for simulating three-dimensional hadronic and electromagnetic cascades, and the transport of particles through matter, for particles with energies ranging from a fraction of an electron volt to 100 TeV. The C-AD expects to use this code more often in the future because it includes magnetic- and electric-field effects on the cascade process. The code is available for the UNIX and Linux operating systems, and is available through its developers at Fermi National Accelerator Laboratory.[188]

---

[179] K. Tesch and H. Dinter, "Estimation of Radiation Fields at High Energy Proton Accelerators," Radiation Protection Dosimetry, Vol. 15 No. 2 pp. 89-107 (1986)

[180] C. Distenfeld and R. Colvett, "Skyshine Considerations for Accelerator Shielding Design," Nucl. Sci. Eng. Vol. 26, p. 117 (1966)

[181] A. H. Sullivan, A Guide to Radiation and Radioactivity Levels Near High Energy Particle Accelerators, Nuclear Technology Publishing, Kent, England, 1992

[182] L. S. Waters, Ed., "MCNPX USER'S MANUAL," LANL Report TPO-E83-UG-X-0001, (1999). See also H.G. Hughes, R.E. Prael, R.C. Little, "MCNPX – The LAHET/MCNP Code Merger," X-Division Research Note, 4/22/97. The version number of the code used in this note is 2.1.5

[183] A. Van Ginneken, "CASIM; Program to Simulate Hadron Cascades in Bulk Matter," Fermilab FN-272 (1975)

[184] A. J. Stevens, "N-Shield, Description," BNL C-A Dept. ES&F Division Note 157 (2000)

[185] See above reference. The CASIM estimates of soil activation in the dump region are in fact over-estimates. Conversely, CASIM dramatically underestimates neutron flux in the backwards direction, but no such estimates exist in the NSRL geometry.

[186] K. Goebel, G.R. Stevenson, J.T. Routi, and H.G. Vogt, "Evaluating Dose Rates Due to Neutron Leakage Through Access Tunnels of the SPS," CERN LABII-RA/Note/75-10 (1975)

[187] A.J. Stevens, "Summary of Fault Studies at RHIC" BNL C-A Dept ES&F Note 156 (2000)

[188] The official MARS Web site is http://www-ap.fnal.gov/MARS/, and links there point to many recent applications of the code

In estimating the degree of radiation risk, shielding design assumes the routine- and maximum-operating beam for each portion of the facility. The design mitigates the greatest radiation hazards, i.e., high-intensity unpolarized protons. Thus, the shield is more than adequate to protect against the loss of polarized protons or heavy ions because their intensity and/or individual nucleon energies comparatively are much less.

Radiation levels from routine loss of flux were estimated for locations around the C-A complex using Monte Carlo codes or simple analytical formulas[189,190,191,192,193] given in texts, monograms, or reports. These codes approach the solution as a succession of individual processes, rather than in terms of global physical-quantities. Making a mathematical experiment that is equivalent to the real physical situation simulates the cascade. The code tracks particles in the cascade from interaction to interaction. The events may be, for example, elastic- or Coulomb-scattering events, inelastic nuclear events in which any variety of secondary particles arise, and absorption followed by decay. The processes and particle production are randomly selected using appropriate probability distributions, either known or well approximated. At any point in the Monte Carlo simulation, any required macroscopic physical quantity may be scored (i.e., energy, fluence, absorbed dose, equivalent dose, stars). A shielding physicist obtains the expected value of each parameter, to the required statistical accuracy, after a sufficient history of events.

For many areas at the C-AD, physicists have studied the radiation levels extensively with the beam faulted in a controlled fashion. The C-AD uses these measured doses and dose rates as well as the calculations.

[189] A. H. Sullivan, A Guide to Radiation and Radioactivity Levels Near High Energy Particle Accelerators, Nuclear Technology Publishing, Ashford, Kent, England, 1992

[190] NCRP Report No. 144, Radiation Protection for Particle Accelerator Facilities, December 31, 2003

[191] NCRP Report No. 51, Radiation Protection Guidelines for 0.1 – 100 MeV Particle Accelerator Facilities, March 1, 1977

[192] IAEA Technical Reports Series No. 283, Radiological Safety Aspects of the Operations of Proton Accelerators, Vienna, 1988

[193] IAEA Technical Reports Series No. 188, Radiological Safety Aspects of the Operation of Electron Linear Accelerators, Vienna, 1979

5.Chapter Five, Accelerator Safety Envelope (ASE)

Table of Contents

5. Chapter Five, Accelerator Safety Envelope (ASE)....1
5.1. Background 2
5.2. Credible Incident Criteria....3
5.3. C-AD's Policy for Selecting Credited Controls 4
5.4. C-AD Criteria for Determining Credited Controls....6
5.5. Selecting Credited Controls....10
5.6. The ASE and Credited Controls 11
5.7. The Bases of Credited Controls for Operations at the AGS, EBIS, Linac, and Booster....12
5.7.1. Credited Controls for Maximum Credible Incidents - ASE Limits 12
5.7.2. Credited Controls for Radiation Hazards Due to Access....13
5.7.3. Credited Controls for Oxygen-Deficiency Hazard 13
5.7.4. Credited Control Supports to Protect Against Radiation....14
5.7.5. Credited Control Support to Protect Against an ODH....15
5.7.6. Calibration, Testing, Maintenance, and Inspections that Support Credited Controls....15
5.7.7. Administrative Controls....17
5.8. The Bases for Credited Controls for Operating the Energy Recovery Linac (ERL)....19
5.8.1. Credited Controls for Maximum Credible Incidents - ASE Limits 19
5.8.2. Credited Controls for Radiation Hazards Due to Access....20
5.8.3. Credited Controls for Oxygen-Deficiency Hazard 20
5.8.4. Credited Control Supports to Protect Against Radiation....20
5.8.5. Credited Control Supports to Protect Against an ODH 21
5.8.6. Calibration, Testing, Maintenance, and Inspections that Support Credited Controls....22
5.8.7. Administrative Controls....23
5.9. The Bases for Credited Controls for RHIC Operations 25
5.9.1. Credited Controls for Maximum Credible Incidents - ASE Limits 25
5.9.2. Credited Controls for Radiation Hazards Due to Access....25
5.9.3. Credited Controls for Oxygen-Deficiency Hazard 25
5.9.4. Credited Controls for Fire Hazard 26
5.9.5. Credited Control Supports to Protect Against Radiation....26
5.9.6. Credited Control Supports to Protect Against an ODH 28
5.9.7. Credited Control Supports to Protect Against Smoke Inhalation in the RHIC Tunnel .31
5.9.8. Credited Control Supports to Protect against Flammable Gas Hazards at STAR 32
5.9.9. Credited Control Supports to Protect against Flammable Gas Hazards at PHENIX....33
5.9.10. Calibration, Testing, Maintenance, and Inspections that Support Credited Controls..35
5.9.11. Administrative Controls....37
5.10. The Bases for Credited Controls for operating the TVDG and TtB 39
5.10.1. Credited Controls for Maximum Credible Incidents - ASE Limits 39
5.10.2. Credited Controls for Radiation Hazards Due to Access....40
5.10.3. Credited Controls for Oxygen-Deficiency Hazard 40
5.10.4. Credited Control Supports to Protect Against Radiation....40
5.10.5. Credited Control Supports to Protect Against an ODH 41

5.10.6. Calibration, Testing, Maintenance, and Inspections that Support Credited Controls..42
5.10.7. Administrative Controls.....43
5.11. The Bases for Credited Controls for the BLIP- and RRPL-Operations.....45
5.11.1. Credited Controls for Maximum Credible Incidents - ASE Limits.....45
5.11.2. Credited Controls for Radiation Hazards Due to Emissions 46
5.11.3. Credited Control Supports to Protect Against Radiation Due to Access.....46
5.11.4. Credited Control Supports to Protect Against Radiation.....46
5.11.5. Calibration, Testing, Maintenance, and Inspections that Support Credited Controls..49
5.11.6. Administrative Controls.....50
5.12. The Bases for Credited Controls for NSRL Operations.....51
5.12.1. Credited Controls for Maximum Credible Incidents - ASE Limits.....51
5.12.2. Credited Control for Radiation Hazards Due to Access 52
5.12.3. Credited Control Supports to Protect Against Radiation.....52
5.12.4. Calibration, Testing, Maintenance, and Inspections that Support Credited Controls..52
5.12.5. Administrative Controls.....53
5.13. Reference Documents for the Bases for Credited Controls 54

Index of Tables

Table 5.4.a C-AD Template for Consequence, Frequency, Risk, and Control 8
Table 5.4.b Example of Consequences, and Minimum Number of Credited Controls.....9

5.1.Background

The SAD adequately details all significant hazards from the C-AD accelerators and accelerator facilities and their operations, and the controls for managing these hazards to assure an acceptable level of risk. The SAD addresses the design, construction, maintenance, operation, and post-operations of C-AD accelerators and accelerator facilities. It describes the hazard controls and provides a direct connection to the Credited Controls in the Accelerator Safety Envelope (ASE).

The C-AD deems the Credited Controls essential to safety. In the ASE, the C-AD identifies the requirements for operability, testing, and surveillance of Credited Controls, as needed, to ensure they reliably perform their designated safety-function. C-AD audits the Credited Controls in its assessment programs.

The following lists the overall process followed in designating Credited Controls for inclusion in the ASE:

- Identify the hazards present at the facility, and determine if they need further analysis
- Distinguish the maximum credible incidents (MCIs) caused by these hazards
    - Ascertain the initiating event and its likelihood
    - Delineate methods of detecting the event
    - Recognize the hazards from the initiating event
    - Assess the consequences and risk from the event
    - Determine engineered and administrative features that reduce risk to acceptable levels
    - Determine need for Credited Controls to ensure actual consequences and risk are bounded by the analysis

- Select the Credited Controls
- Protect the Credited Controls
- Manage the Credited Controls' operability and specify surveillance requirements via the ASE

The ASE formally establishes Credited Controls and the limits on operations within which the C-AD operates the accelerator facilities. It ensures that the Credited Controls are reliably in place.

The C-AD requires adherence to the DOE's approved requirements stated in the ASE, viz., one of the required documents for an accelerator's authorization bases for commissioning and routine operations. This chapter offers an overview of the development of the Credited Controls in the ASE. Adhering to the requirements of BNL's Accelerator Safety Subject Area, the C-AD submits the ASE to the Laboratory's ESH Committee for review. The DOE BHSO approves the ASE, and sanctions all changes to a previously approved ASE.

5.2. Credible Incident Criteria

The process driving the determination of Credited Controls evaluated the following:

- Internal events
  - These include credible internally initiated operational accidents, such as process upsets, beam misalignments, spills, equipment failures, fires, and inert-gas releases. In evaluating all types of scenarios, the C-AD based their determinations of credible internal events on consensus and on decades of operational experience, while excluding as not credible easily justified internal events based on physics or other bounding logic. Examples of initiators of credible internal events are happenings resulting from equipment failures and human errors.
- Natural phenomena
  - These encompass seismic events, extreme wind, hurricanes, and flooding. The C-AD considered these events against applicable building codes under which BNL constructed its infrastructure, and found construction to be consistent with the requirements in the DOE's STD-1020-2002.
- External events initiated by humans
  - These include explosions or vehicular crashes that either cause releases or have a major impact on the facility's operations. The frequency for their credibility was an event with a frequency greater than once every 10,000 years.

The safety analyses considered the consequences to workers inside the accelerator or the accelerator facility. The C-AD assumed the public was immediately outside BNL's site boundary. The approach used to evaluate the potential impacts to persons within the boundary depended on the hazard involved, and the individuals' locations. To assure the proper controls, the C-AD's analyses covered all credible locations for workers and non-workers, including appropriate occupancy. The C-AD adopted an informed approach to selecting the Credited Controls that combined expert opinion, and cautious assumptions and calculations to generate a conservative understanding of the risk.

The C-AD facilities are located within a large multi-purpose laboratory site. The C-AD assumed an orthodox evaluation of the closest location where the postulated event could affect a member of another facility, another onsite individual, or a C-AD worker. For a loss of beam event, the C-AD assumed that the receptor was at the shield boundary nearest the beam loss, and

at the nearest non-C-AD facility or uncontrolled area, such as an on-site road if that was closer. The C-AD assessed releases of radiological material under stable low-wind speed conditions. BNL's stack designs ensure discharge is above a building's eddy zone; this traditionally represents the worst-case for material release. The C-AD similarly evaluated airborne releases from stacks using these wind conditions.

5.3.C-AD's Policy for Selecting Credited Controls

The C-AD identified key ESH issues during the design, testing, commissioning, and operation of accelerators and accelerator facilities. This Section establishes the criteria by which C-AD determines the essential engineered- and administrative-controls applicable to all stages of accelerator development and operation. The C-AD based their methodology for choosing these vital controls on the DOE Order 420.2B, *Safety of Accelerator Facilities*, its successor the DOE Order 420.2C, and DOE G420.2-1, *Accelerator Facility Implementation Guide*.

C-AD designs and operates accelerator facilities to meet the external regulatory requirements covered in BNL's SBMS. However, not all the controls used by C-AD equally impact safety. Essential controls are those critical to protecting the public, workers, and the environment from the more severe postulated events involving non-standard industrial hazards. The ASE ensures that C-AD has additional quality controls, design margins, and pays operational attention to these essential controls.

The DOE Order 420.2C names these essential controls "Credited Controls" and defines them as "…controls determined through safety analysis to be essential for safe operation directly related to the protection of personnel or the environment."

Credited Controls are a limited subset of the total number of controls C-AD employs for overall facility safety and operation. At C-AD, the specific Credited Controls protect against significant exposure to ionizing radiation from accelerator beams, airborne releases of radioactive material, and oxygen-deficiency hazards involving liquid-helium releases. On the other hand, controls that are not Credited Controls offer additional significant reductions in these risks. However, they are not included in the ASE unless they support a Credited Control. C-AD considers employing multiple layers of controls as its defense-in-depth.

C-AD has Credited Control criteria for radiation dose, oxygen deficiency, and airborne concentrations of toxic chemicals; however, there is no potential for significant chemical release from its accelerator facilities. Nevertheless, the C-AD intends to have criteria to guide future experiments and accelerator designs. The C-AD's criteria serve to protect the environment because Credited Controls prevent or mitigate the releases of radioactive materials and toxic chemicals.

The DOE does not require the C-AD's SAD comprehensively address standard industrial hazards. C-AD considers such hazards as those routinely encountered and accepted in general industry, and for which national consensus codes or standards exist to guide safe design and operation. On the other hand, the C-AD evaluated the potential of these hazards to initiate Maximum Credible Incidents (MCIs).

In addition to radiological hazards, the C-AD determined that the Oxygen Deficiency Hazard (ODH) within accelerator enclosures fell outside the scope of national consensus codes and standards, and so developed a criterion requiring Credited Controls for significant ODH hazards within accelerator enclosures.

The selection criteria apply to the postulated consequences of the events analyzed in Chapter 4 of the SAD. The C-AD assumed and evaluated a broad, encompassing range of off-normal events and their potential outcomes. The next Sections present the criteria for determining when Credited Controls are required to prevent or mitigate a particular off-normal event, based upon its potential for consequence. Additionally, the criteria aids in properly selecting a Credited Control when more than one is available or required to mitigate a certain event.

The following list defines terms used throughout these next Sections:

- **Accelerator Facility** - the accelerator and associated roads within site boundaries, the plant and equipment utilizing, or supporting the production of accelerated particle beams and the radioactive material they create to which access is controlled to protect the safety and health of workers, the public, and the environment. The term facilities includes injectors, targets, beam dumps, detectors, experimental halls, non-contiguous support-and-analysis facilities, experimental enclosures and apparatus utilizing the accelerator, regardless of where it was designed, fabricated, or constructed; this included all systems, components, and activities addressed in the Safety Analysis.
- **Accelerator Operations** - those activities of an accelerator and any associated facilities bounded by the Safety Assessment Document. Accelerator operations (and post operations) include the producing, dispensing, analyzing, moving, processing, handling, storing, and other uses of radioactive material within the accelerator facility
- **Accelerator Safety Envelope –** a set of verifiable physical- and administrative-credited controls defining the bounding conditions for safe operation and addressing the accelerator facility's hazards and risks
- **Authorized Alternative** - an ASE-approved pre-specified alternative that may necessarily be used whenever certain ASE Credited Controls are not met under particular conditions. The main advantage of employing an Authorized Alternative is that the SAD reviewed and documented it, and the DOE BHSO approved its use. The authorized alternative must not lower the overall level of safety.
- **Commissioning** - a phase of operating a newly constructed accelerator facility used to obtain control of the beam, and to verify new modes of operation. Commissioning periods often are tailored to each facility's needs, with major variations in their duration, breadth, and formality; in all cases, the activities are preceded by an ARR and bounded by an ASE. At their conclusion, the accelerator is ready to undergo an ARR for routine operations, or directly undertake routine operations if the ARRs for the commissioning process included review of routine operations.
- **Credited Controls** - controls determined through safety analysis to be essential for safe operation directly related to protecting personnel and the environment.
- **Credited Administrative Controls** - requirements controlled by specific procedures, such as verifying system configuration or requiring specific personnel; also included are requirements to wear personal protective equipment (PPE) to enter an area to ensure the facility's safe operation.
- **Credited Engineered Controls** - hardware or structural items (structures, systems, and/or components, both active and passive) that accomplish a particular safety function
- **Chemical toxicity** of accidental releases, based on ERPG-3 for C-AD workers, and ERPG-2 for the public

- **Emergency Response Procedure Guidelines (ERPGs)** – the American Industrial Hygiene Associations' system of guidelines for airborne concentrations of toxic materials
- **ERPG-2** - the maximum airborne concentration seemingly below which nearly all individuals could be exposed for up to 1 hour without experiencing or developing irreversible or otherwise serious health effects or symptoms that might impair their ability to take protective action
- **ERPG-3** - the maximum airborne concentration below ostensibly nearly all individuals could be exposed for up to 1 hour without experiencing or developing life-threatening effects
- **Radiation dose** when used for assessing accident consequences to the public or workers is defined as the equivalent dose received from a single event
- **Safety Analysis** - a systematic documented process to identify the hazards and risks of a given operation. It includes descriptions and analyses of the adequacy of measures taken to eliminate, control, or mitigate the hazards and risks of normal operation, and identification and analyses of potential accidents and their risks
- **Safety Assessment Document (SAD)** - a document containing the pertinent findings from a safety analysis for clarifying the risks of operating an accelerator facility
- **Standard Industrial Hazards** are those routinely encountered and accepted in general industry, and for which national consensus codes and/or standards exist to guide safe design and operation. Standard industrial hazards were evaluated for their potential to initiate accidents related to specific accelerator processes
- **Unreviewed Safety Issue (USI)** - a significant increase in the probability of or consequences from (1) a planned modification creating an unanalyzed postulated accident or condition that could have a significant adverse impact, or, (2) a previously analyzed postulated accident or condition

5.4.C-AD Criteria for Determining Credited Controls

Determining Credited Controls based on risk is not an exact science but an art that people master with experience. Table 5.4.a is the C-AD's template for their risk approach to determine the specifics of the Credited Controls, viz., their consequences, frequencies, and risks. For each specific event, the C-AD assesses its frequency range and its potential consequences via engineering judgment, actual data, and/or engineering analyses. The green risk levels in this Table are those wherein the C-AD chooses to operate. C-AD does not operate in the orange risk levels because additional Credited Controls are required to reduce risk to an acceptable level. C-AD never operates in the red risk levels.

The Extremely Low consequence events in Table 5.4.a are those that do not entail a major injury or occupational illness, or do not significantly affect the environment. The C-AD uses ALARA Controls for these types of events, even if they occur frequently, such as routine radioactive emissions. On the other hand, the C-AD greatly values having the trust of the public and the regulators, and hence uses Credited Controls on some Extremely Low consequence events, such as requiring rainwater-impermeable caps over activated soils. C-AD denoted cap inspection as a Credited Control to assure additional quality control, a design margin, and operational attention to it. Thus, selecting controls is more of a judgment-based process (an art) than a standardized one (science) and the choice depends on economic- and social-factors, rather than just regulations or risk.

Low consequence events are those with minor onsite effects with negligible or no offsite impact. They may cause minor injuries or minor illness, and have minimal environmental impact. As Table 5.4.a indicates, the C-AD uses ALARA and Regulatory Controls to prevent these events, as for example the requirement for personnel protective equipment (PPE) to protect workers against electrical arc flash. However, BNL values the health of its staff, and requires SBMS Controls beyond the Regulatory Controls for arc-flash PPE. BNL's 0^+ PPE requirement reduces the chance of a second-degree burn from an arc flash below that allowed in NFPA 70E.

Medium-consequence events have considerable impact onsite or minor impact offsite. They may cause the deaths, severe injuries, or severe occupational illness to personnel, major damage to a facility, or minor effect on the offsite environment. Operations can be resumed after medium consequence events. The C-AD employs ALARA, Regulatory Controls, and SBMS Controls to prevent these events. However, the C-AD holds the health of its workers in high regard, and hence, requires Credited Controls for ODH, even while fully meeting SBMS requirements. An example here is an event that releases many tons of liquid helium into an occupied RHIC tunnel and/or results in significant accelerator damage, such as that experienced at CERN in 2009. The C-AD identified a helium-release Credited Control to ensure additional quality control, a wider design margin, and operational attention to the ODH controls.

High-consequence events have serious impacts onsite or offsite, resulting in deaths or loss of facility/operation. They significantly degrade the environment and are of great concern to the public and the regulators. The C-AD's criteria require ALARA, Regulatory Controls, SBMS Controls, and Credited Controls for these events if their frequency of occurrence is greater than once in 10,000 years. However, the C-AD considers as unacceptable the risk of immediate radiation injury, even though the Access Controls System for preventing radiation deaths or injuries has an estimated failure rate of less than once in 10,000 years. Therefore, the C-AD specified Access Control System-related Credited Controls to guarantee additional quality control, a design margin, and close operational attention to radiological hazards.

Table 5.4.a C-AD Template for Consequence, Frequency, Risk, and Control

Incident Frequency Range, Incidents per Year	Defense in Depth			
	ALARA Controls	Regulatory Controls	SBMS Controls	Credited Controls
>1	Unnacceptable/ Acceptable Risk	Unacceptable Risk	Unacceptable Risk	Unacceptable Risk
10^{-2} to 1	Acceptable Risk	Unacceptable/ Acceptable Risk	Unacceptable Risk	Unacceptable Risk
10^{-4} to 10^{-2}	Acceptable Risk	Acceptable Risk	Unacceptable/ Acceptable Risk	Unacceptable Risk
$<10^{-4}$	Acceptable Risk	Acceptable Risk	Acceptable Risk	Unacceptable/ Acceptable Risk
Consequence	Extremely Low	Low	Medium	High

To identify an essential Support for a Credited Control, the C-AD considered the outcome of calibrating the interlocking radiation monitors used to remove the accelerator beam in the event of unexpectedly high levels of radiation. Interlocking radiation monitors are an aspect of the Access Control System, which is a Credited Control. The observed as-found out-of-calibration rate for area radiation monitors is about 0.005 per unit per year. For Controlled Areas on the road over the AGS Ring where a person should receive a dose of no more than 20 mrem in the event of a beam misalignment, two independent radiation monitors monitor the area's radiation level. The C-AD allows Controlled Areas if the fault dose is below 20 mrem. For two radiation monitors, there are 0.005 x 0.005 = 0.000025 chances per year of operating with both area monitors out-of-calibration. Assuming 100% occupancy in Controlled Areas, the frequency of a radiation exposure event is determined by multiplying it by the frequency of a beam misalignment fault. Experience suggests a significant beam fault occurs about once every year or less (1 x 0.000025 per year), yielding a rate of overall frequency of an inadvertent 20-mrem dose event in a Controlled Area of one in 40,000 years. Thus, calibrating the interlocking radiation monitors once per year is an acceptable risk since the overall frequency of accidental exposure from an event involving beam loss is less than once in 10,000 years. Thus, listing the annual calibration of interlocking radiation-monitors as a Credited Control Support in the ASE is reasonable since it is essential to the Access Control System, which is a Credited Control.

The C-AD uses the following criteria to determine if more than one Credited Control is required. Several Credited Controls, or a Credited Control and its Support, may have to work in concert to achieve an acceptable risk associated with a specific consequence. Table 5.4.b identifies those events where the C-AD requires more than one Credited Control.

The following criteria for the number of Credited Controls apply to the consequences determined conservatively for each off-normal/accident event evaluated in Chapter 4. Again, determining Credited Controls based on risk is an art and not a science, and the C-AD often chooses to use Credited Controls for events of less consequence than the examples in Table 5.4.b.

Table 5.4.b Example of Consequences, and Minimum Number of Credited Controls

Consequence	Minimum Number of Credited Controls
High: The radiation dose could exceed 1 rem to an offsite receptor	At least two Credited Controls; the controls may be similar but common-mode failure should be considered
Medium: The radiation dose could exceed between 0.1 to 1 rem to an offsite receptor	At least one Credited Control
Medium: The offsite airborne toxic-chemical-vapor concentrations could exceed ERPG-2	At least one Credited Control
High: The radiation dose to a worker could exceed 50 rem, or exposure to airborne chemical concentrations above the defined ERPG-3 level	At least two Credited Controls; the controls may be similar but common-mode failure should be considered
Medium: The unmitigated radiation dose to a worker could exceed 5 rem, or exposure to airborne chemical concentrations above the defined ERPG-2 level	At least one Credited Control
Medium: Each unmitigated event that could cause a worker to breath air with an oxygen concentration below 14% by volume	At least one Credited Control

The C-AD used the following assumptions in constructing Table 5.4.b:

- Radiation dose criteria are for the total equivalent dose, including both the internal and external doses resulting from an event
- Toxic chemical hazards are evaluated against the appropriate criteria of the Emergency Response Procedure Guidelines (ERPGs) associated with that chemical
- Incidents that could impact the public outside C-AD accelerator facilities are assessed in areas immediately outside the BNL site boundary
- Incidents that could impact nearby non-CAD workers outside the C-AD accelerator facilities are assessed in uncontrolled areas inside BNL's site boundary
- Incidents that result in an airborne release of radiological- or toxic-material are assessed by an appropriately conservative meteorological model
- Incidents that affect workers locally are assessed at the shield boundary, or within an accessible enclosure

For credible events that require one Credited Control to protect personnel, the C-AD considered designating an additional Credited Control to afford significant additional mitigation so to help ensure the minimal possible risk to workers. As previously discussed, the process for

identifying an additional control requires the C-AD to evaluate the overall situation and any ALARA, SBMS, or regulatory controls that also are in place, and judge them on a case-by-case basis. Examples credible situations considered were

- An event initiated by, or involving an explosion or large fire that could breach a confinement barrier for inert gas or radioactive material
- The Credited Control depends on correct human actions undertaken within a limited time
- The Credited Control depends on a complex device for which a documented reliability analysis is unavailable

5.5. Selecting Credited Controls

Once the need for a Credited Control is identified, the C-AD follows a process to select the specific Credited Engineered Control or Credited Administrative Control required to accomplish the required safety function. The C-AD used the criteria below to attain the greatest degree of efficiency and reliability in the selection, realizing that there were situations where some criteria were inappropriate for a given situation. Then, the C-AD applied engineering judgment to choose the best items.

When selecting Credited Engineered Controls, the C-AD felt it was imperative to identify any dependencies for each system considered. For example, if a given Credited Engineered Control depended on another system to enable its required function, then at least some aspect of that other system became an essential Support to the Credited Engineered Control (e.g., ODH monitors or area-radiation monitors support the Access Control System). The C-AD followed the selection criteria listed below to the greatest extent practicable when designating Credited Controls and their essential Supports:

- When either an active or a passive device could be a Credited Control to ensure the safety function, C-AD selected the latter. Passive devices, such as configuration-controlled shielding, inherently exhibit higher reliability than active devices, such as interlocking radiation monitors.
- If either an engineered control or an administrative control could perform the needed safety function, then C-AD selected the former. Engineered controls generally have higher reliability than human actions. For example, interlocking radiation monitors that remove the beam are preferred to procedures that require manually stopping the beam, or expecting personnel leave an area when radiation alarms annunciate.
- When there was a choice between a non-credited control that would prevent an event and a Credited Control that would mitigate the consequences of the event, the C-AD selected the non-credited control. C-AD chooses to prevent events rather than mitigating their effects. For example, if the supply of helium could be limited to prevent an oxygen level below 18% compared to installing a Credited emergency-ventilation system, then the supply of helium was controlled.

The C-AD prefers to use Credited Controls that, in some cases, protect against multiple events. An example is using the Access Control System to prevent access to both a radiation hazard and a potential oxygen-deficiency hazard. Working against this preference is the desire to make protection systems simple and efficient for testing and annual re-certification.

The C-AD selected as Credited Controls only those few items essential for protecting workers, the public, and the environment, so allows them to devote a high degree of operational attention to the Credited Controls.

5.6. The ASE and Credited Controls

The ASE defines the Credited Controls and their Supports, Controls that are unique to an accelerator's non-standard industrial hazards. The C-AD considers Credited Controls essential for operating safely. In the ASE, the C-AD identifies the requirements for operability, testing, and surveillance of Credited Controls, as needed, to ensure they reliably perform their designated safety function. The C-AD audits the implementation of Credited Controls using internal departmental assessment programs. C-AD trains line and support personnel on the Credited Controls in the ASE via procedures and classroom teaching. Through the ASE, C-AD minimizes the potential for non-standard industrial hazards to affect the public, workers, and the environment.

The C-AD implements the requirements of DOE Order 420.2B via compliance with the BNL Subject Areas. BNL describes the method used by the Collider-Accelerator Department for change control of the ASE in the Subject Area on Accelerator Safety.

The C-AD's SAD and associated Unreviewed Safety Issue Determinations (USIDs) assume initial conditions, equipment operability, and the beam's energy- and intensity-limits in determining the potential risks of operations. The ASE requirements ensure that particular beam-power limits and particular engineered- and administrative-Credited Controls remain in place so that the actual risks do not exceed their SAD-computed risk categories. The discrete risk categories are a function of the defined ranges of frequency, and consequences of an event, as described earlier in Chapter 5. An increase in frequency or the consequences of an event in the context of the C-AD's ASE or SAD signifies that the event jumps from one frequency range or consequence category to the next higher ones.

The DOE approves the ASE requirements since the ASE specifies agreement on the boundaries and limits of the safe operation of the C-AD facility. No activity or facility modification may compromise the ASE. The C-AD screens all proposed changes for hazards that potentially lie outside the bounds of those considered in the SAD and in the ASE. The C-AD maintains change control using the C-AD procedure on USIDs. The latter process may entail rewriting portions of the SAD and modifying the ASE. Such revisions require the applicable review and approval. Reportable events or discoveries may initiate the USID process. If an activity or modification requires a revision to the ASE, other than an editorial one, then the C-AD sends to the DOE for approval an analysis of, and basis for the change. The C-AD does not place an activity or a change into operation until after the DOE has approved the modification to the ASE. This process ensures a robust management of change program to maintain the consistency of the facility configuration with the C-AD SAD's assumptions. The C-AD operates the accelerator facilities such that actual risks never exceed SAD's predicted risks.

The C-AD treats a variation from the Credited Controls and their Supports as a violation of the ASE, and must report the event as an occurrence, as defined by BNL's SBMS Subject Area on Occurrence Reporting. The C-AD defines a violation as not satisfying a Credited Control, its Supports, or its Authorized Alternative. The C-AD makes notifications of occurrences according to the requirements in the C-AD Operations Procedure Manual. The DOE

and the C-AD expect strict adherence to the approved bounding conditions of the ASE during all commissioning activities and operations. Part of the C-AD configuration control program requires informing the DOE of 1) positive USIDs, and 2) proposed changes to ASE-bounding conditions that the DOE must approve.

Authorized Alternatives are approved compensatory actions that, when implemented as specified in the ASE, prevent ASE violations and reduce unnecessary impact on operations. The C-AD pre-plans compensatory actions such that shift personnel handle minor failures. The C-AD based the Authorized Alternatives on detailed risk analyses, previous experience, or informed engineering judgment; in recognizing that equipment is not 100% reliable, time is allowed to restore full operability of Credited Controls. Implementing the Authorized Alternatives does not significantly affect risk.

The C-AD specifies Administrative Controls that are Credited Controls or Credited Control Supports in Sections 2 through Section 4 of the ASE. Section 5 lists Administrative Controls that are not Credited Controls to indicate defense-in-depth, supporting compliance with ALARA-, Regulatory-, and SBMS-Controls. The C-AD's management evaluates each violation of Section 5 Administrative Controls to determine the need to report an occurrence.

If a Credited Control or its Supports are not satisfied, and it has a specific Authorized Alternative, then C-AD immediately implements it, or stops the activity employing the affected equipment as soon as is practicable. The intent is promptly to establish the Authorized Alternative in a controlled, safe manner. If the Authorized Alternative is not satisfactory or if it has a limited time for use, then the C-AD halts the affected activity in a controlled, safe manner as soon as practicable after the expiration of the time interval .

If a Credited Control or its Supports have no specific Authorized Alternative and is not satisfied, then C-AD stops the activity that uses the affected Credited Control as soon as practicable. The intent is immediately to end the undesirable activity in a purposeful risk-free way.

The C-AD and the DOE allow emergency actions that depart from a Credited Control or its Supports when no actions consistent with them are immediately apparent, and when operators use such actions to protect the public, workers, and the environment. This requirement recognizes that situations may occur in a procedure that the C-AD did not anticipate. It allows qualified, responsible individuals to take emergency protective actions. The on-duty person in charge of the C-AD facility's safety must approve emergency actions, as defined in the operating procedures, when the emergency occurs, and must report to the C-AD management within 2 hours. Operators inform management of such actions so that proper communications with the DOE may take place without diverting the operator's immediate focus on ensuring safety.

5.7. The Bases of Credited Controls for Operations at the AGS, EBIS, Linac, and Booster

5.7.1. Credited Controls for Maximum Credible Incidents - ASE Limits

The C-AD cannot exceed the maximum credible beam-power of accelerators without changing its structures, systems, and components (SSC). Altering the SSC requires authorization by the C-AD's management (ASE). **Bases:** The maximum credible beam-power is associated with the Credited Controls for radiation hazards.

For the Linac, the C-AD based the maximum credible beam-power on the maximum product of the number of its low-energy unpolarized protons or polarized protons, and its particle kinetic energy, which is 1.1 x 10^{18} GeV in one hour (ASE). **Bases:** This is the Linac's physical limit. Major change would have to occur in the physical size of, and electrical power to the Linac to increase this limit. The C-AD based the limit of 1.1 x 10^{18} GeV in one hour on 200 MeV high energy protons at intensity of 1560 terra-protons (TP)/s (50 mA, 10 pulses per second and 500 µsec/pulse), and used this bounding hourly limit, which is 250 kW maximum beam power, in all Linac dose and dose-rate calculations in the SAD.

For the Booster, the maximum product of the number of low-energy and high-energy unpolarized protons, polarized protons, or heavy ions and the particle's kinetic energy in the Booster ring is 1.1 x 10^{18} GeV in one hour (ASE). **Bases:** This is the physical limit of the Booster. Major changes would have to occur in the physical size of, and electrical power to the Booster Ring to raise this limit. The C-AD based this limit on 3-GeV high-energy protons at an intensity of 100 terra-protons (TP) per second. The C-AD used this bounding particle-energy hourly limit, i.e., 49 kW of beam power, in calculating all Booster doses and dose rates.

For the AGS, the maximum product of the number of high-energy unpolarized protons, polarized protons or heavy ions and particle kinetic energy is 1.1 x 10^{19} GeV in one hour (ASE). **Bases:** This is the physical limit of the AGS. To increase it, major changes must be made to the physical size of and electrical power to the AGS Ring. The C-AD based the limit of 1.1 x 10^{19} GeV in one hour on 30 GeV high-energy protons at an intensity of 100 TP/s; this bounding hourly limit, which is 490 kW of beam power, was used in all AGS dose and dose-rate calculations in the SAD.

For the EBIS, there are no particles with energy > 2 MeV/amu (ASE). **Bases:** With the exception of deuterons, the EBIS's vacuum pipe confines any radiation hazard from beams < 2 MeV/u. During operations with deuterons at any possible EBIS beam power, the C-AD controls this hazard with ALARA and SBMS controls.

5.7.2.Credited Controls for Radiation Hazards Due to Access

An access controls system (ACS) must prevent access to the beam during operations in the AGS, the Booster, the Linac, or the EBIS (ASE). **Bases:** The ACS is the Credited Control for accelerator enclosures and it prohibits access to beam; it removes the beam when access is forced. The design of the access controls system is fail-safe and configuration- controlled. The C-AD Radiation Safety Committee approves any changes that may affect the reliability of the system's safety function.

5.7.3.Credited Controls for Oxygen-Deficiency Hazard

Alarm systems must be in place to minimize the likelihood of injury/illness from the release of an inert gas (ASE). **Bases:** Although the EBIS has a cryogenic solenoid magnet, the AGS Ring is the only area having the potential for an oxygen-deficiency hazard whenever the C-AD fills the Cold Snake Magnet with cryogens. The Credited Controls are the oxygen sensors and alarm system in the area of the AGS Ring that can rapidly warn occupants of reduced oxygen concentration if the magnet-system pressure-boundary fails.

5.7.4.Credited Control Supports to Protect Against Radiation

The C-AD protects groundwater by using a soil cap over activated soil shielding if the calculated annual activity concentration of sodium-22 in the leachate exceeds 25%, or tritium in leachate exceeds 5% of the Drinking Water Standard. BNL's management may waive the requirement for a cap (ASE). **Bases:** This satisfies the SBMS's Design Practice for Known Beam Loss Locations, and the permanent BNL Waiver 2010-4; it keeps to ALARA the potential groundwater contamination caused by activated soil leachate. C-AD must justify any need for a waiver to BNL's management who must approve the deviation before allowing the change. Personnel health or safety is not a significant consequence of contaminating the groundwater. However, BNL loses credibility with regulators and the public should an event occur. No drinking-water supply wells onsite lie in the path of a groundwater plume, and if one were created, it would take more than 20 years for contaminated groundwater to travel beyond BNL's site boundary, so allowing time for remediation.

Authorized Alternative: If the C-AD discovers a breach in an installed cap, the alternative equivalent protection approved by C-AD's management, must be in place within 10 days of the discovery. The C-AD must start permanent repair to the cap as soon as practicable (ASE). **Bases:** Sodium-22 and the tritium are present in the soil even when the accelerator is off. Thus, the C-AD requires cap integrity at all times. Rainfall drives the leachate into the groundwater. The C-AD bases estimates of potential contamination on the annual amounts of rainfall. Additionally, a crack or breach in a cap normally occupies just a tiny fraction of the cap's total area. In ten days, only a small fraction of the sodium-22 and tritium covered by a breached cap can move into groundwater. Experience showed that the resulting ribbon of contamination is diluted from dispersion and radioactive decay as it traverses toward BNL's site boundary. There is no significant increase in risk to workers or the public from waiting 10 days to repair such a breach; the C-AD repairs breaches as soon as practicable. The 10 days allow planning and implementing the most effective repair process. If the breach is a large one, as soon as possible the C-AD places over it a temporary plastic cover, used effectively in the past, to minimize potential contamination to the groundwater.

Before beginning operations, the beam, accelerator, and beam-line enclosures all must have configuration-controlled, properly placed shielding (e.g., berms, shield blocks). The C-AD requires a completed Radiation Safety Checklist before starting operations with the beam each year (ASE). **Bases:** This method documents the visual verification that all shielding assumed in the safety analysis is in place before starting beam operations, thereby ensuring that no excessive radiation exposures occur.

During beam operations of an accelerator, the associated ACS must be functional, meaning that those portions of the ACS that prevent exposure to beam radiation inside enclosures, and remove beam when there is excessive beam loss are functional (ASE). **Bases:** The C-AD uses access control systems (ACSs) to ensure no one receives excessive radiation exposure. These ACSs are fail-safe, redundant, and functionally tested in accordance with the Radiological Controls Manual. The C-AD controls the configuration of the ACS design and of any changes that may affect the reliability of the system's safety function; the C-AD's Radiation Safety Committee approves all such changes.

During the operations of an accelerator, the area-radiation monitors interfacing with the ACS to remove beam during excessive beam loss must be within their calibration date (ASE).

Bases: The proper operability and placement of radiation monitors interfaced with the ACS ensures that no worker receives unnecessary radiation-exposure from routine beam loss and faults. C-AD does not consider a radiation monitor operable unless it has up-to-date calibration or a waiver that extends the calibration due date. BNL's Radiological Control Manager approves all waivers to extend the calibration interval. The waiver documents that radiation monitors are operable, and the calibration stickers do not apply during the waiver period.

During beam operations, the C-AD controls the locations of area radiation monitors interfaced with ACS via a configuration-control system (ASE). **Bases:** Configuration control of ACS radiation monitors ensures that they are in the proper locations so that the sensed dose-rate provides the MCR's operations staff with accurate alarms. Each ACS radiation monitor has a built-in keep-alive source that enables the ACS to continuously sense and react if a radiation monitor is disconnected, or has failed. When a radiation monitor is added or replaced, the C-AD's Radiological Control Technicians (RCTs) must test it with an independent radioactive source to verify that the monitor sends its output signals to the correct readout location in the MCR.

5.7.5.Credited Control Support to Protect Against an ODH

When C-AD fills the AGS Cold Snake Magnet with liquid cryogens, the installed ODH alarm system must be operable (ASE). **Bases:** The failure of the Cold Snake Magnet pressure boundary could release all cryogens within the magnet, so causing a rapid oxygen deficiency in the immediate area. An alarm is sufficient warning to evacuate the AGS Ring and avoid injury. The Cold Snake Magnet contains 110 L of LHe during normal operation. If the Snake connects to a 500 L LHe Dewar during filling operations, it may release 610 L LHe. The C-AD assumes a conservative length of 100 feet on either side of the Cold Snake as the fixed volume into which this helium is released, and has documented the oxygen-deficiency analyses.

Authorized Alternative: Upon discovering an inoperable installed ODH alarm system, the C-AD allows entry into the area covered by the alarm system as long as each entrant wears an alarming portable-oxygen monitor (ASE). **Bases:** A portable oxygen monitor (POM) is as effective as the installed monitor and alarm system; thus having each individual wear a POM when entering the posted ODH area does not raise the risk of exposure to oxygen deficiency. The Access Controls Group restores the operation of the installed ODH alarm system; there is no time limit on using POMs in place of the installed system.

5.7.6.Calibration, Testing, Maintenance, and Inspections that Support Credited Controls

The calibration, testing, maintenance, and inspections needed to support Credited Controls are as follows.

The C-AD must functionally test the Access Controls System (ACS) in accordance with requirements in BNL's Radiological Control Manual (ASE). **Bases:** The calibration, maintenance, and testing of Credited Controls and Supports ensure they are in place during beam operations as assumed in the safety analysis. BNL's Radiological Control Manual requires annual tests of the ACS, which includes a functional check of the interlocking area radiation-monitors; this requirement was shown to be acceptable based on failure rates and reliability studies of this redundant equipment. The manager of BNL's Radiation Controls Division grants

extensions for operational flexibility. C-AD requested and received extensions twice in the last 20 years.

Area-radiation monitors must undergo annual calibrations; an allowed extension must not exceed 15 months (ASE). **Bases:** C-AD bases the frequency of radiation-monitor calibration on experience and engineering judgment. The C-AD annually calibrates the radiation monitors used to interlock the accelerator beam off in the event of unexpectedly high-levels of radiation. The C-AD bases the 3-month extension on the mean-time-to-failure (MTTF). An extension affords operational flexibility for scheduling and performing the calibration. The C-AD does not rely routinely on an extension, each of which must be approved by the C-AD Radiation Safety Committee Chair and the manager of BNL's Radiation Control Division. The observed out-of-calibration failure rate for the C-AD area radiation monitors is about 5×10^{-3} per monitor per year. If the C-AD assumes a constant failure rate, then increasing the interval from 12- to 15-months would increase the out-of-calibration failure rate to ~6.2×10^{-3} per monitor per year. Because potential fault doses between 20 mrem and ~100 mrem are an extremely low consequence and since the radiation-monitors' failure rate would rise only from 5×10^{-3} to ~6.2×10^{-3} between calibrations, the consequence category and frequency range of this failure is not increased. Thus, this is acceptable risk of accidental low-level unnecessary exposure (an MTTF once in ~160 years versus once in 200 years).[1]

When the C-AD fills the AGS Cold Snake with liquid cryogens, the installed ODH alarm system must be tested within its annual interval that must not exceed 15 months (ASE). **Bases:** The C-AD bases the annual calibration frequency of the installed oxygen-monitors and the 3-month extension on experience and engineering judgment. No failure records are maintained for these sensors; thus, the C-AD cannot quantify the small increase in failure during this extension period. An extension allows operational flexibility for scheduling and performing the testing; the C-AD does not rely routinely on an interval extension. The Authorized Alternative, i.e., the use of POM, affords the same level of protection should the installed system fail; thus, there are no adverse safety effects from using the Authorized Alternative.

Radiological shielding and barriers (e.g., berms, shield blocks, and fencing) must undergo visual inspection before operations to ensure that they are in place and functional (ASE). **Bases:** This interval coincides with the annual running period at C-AD accelerators, and the inspection is part of the facility startup. The C-AD follows procedures, and documents all shielding using a Radiation Safety Checklist for each facility. Once operational, periodic radiation-dose-rate surveys ensure the radiation barriers remain in place and are effective. The annual environmental thermo-luminescent dosimeter (TLD) program also demonstrates the efficacy of the shielding and shielding controls.

Annual visual inspections of the rainwater barriers for activated soil must ensure that they are in place and functional (ASE). **Bases:** Experience demonstrated that annual inspections suffice to uncover any problems with impermeable caps. The C-AD has not experienced any significant cap failures that allowed contamination of the groundwater since this program started over 10 years ago. This interval also coincides with the annual operating periods for C-AD

---

[1] Radiation Alarms and Access Control Systems, National Council on Radiation Protection and Measurements, NCRP Report No. 88, Appendix A: Discussion of Reliability, 7910 Woodmont Avenue, Bethesda, MD. 20814.

facilities; the inspections occur during the annual shutdown of the accelerators before starting operations each year.

The C-AD visually inspects rainwater barriers for the AGS g-2 area and the Linac BLIP spur activated soil areas twice yearly; the first inspection period must occur before 8 months (ASE). **Bases:** The basis of this inspection interval is

- Agreement documented in Medical Department and Collider-Accelerator Department, Memorandum of Understanding BLIP and g-2 Cap Inspection Process dated June 25, 2007, and
- Record of Decision (ROD) for Area of Concern 16T g-2 Tritium Source Area and Groundwater Plume, Area of Concern 16K Brookhaven Linac Isotope Producer and Area of Concern 12 Former Underground Storage Tanks dated April 6, 2007.

The entire inspection process became the responsibility of the C-AD in October 2010 when BNL transferred the BLIP to the C-AD. The ROD requires visual inspections of the AGS g-2 cap and Linac BLIP area cap on a frequency of at least two times per year. The ROD does not specify the interval between these inspections. C-AD bases the 2-month extension on experience and engineering judgment, to provide operational flexibility in scheduling and performing the inspections. The C-AD does not rely routinely on extensions; if C-AD uses the two-month extension to go to eight months before the first inspection, then the second inspection must be in the same twelve-month period.

5.7.7.Administrative Controls

While the C-AD does not treat a violation of non-credited administrative controls in the same way as Credited Controls or Credited Control Supports in the ASE, the following administrative controls in the ASE provide defense-in-depth to ensure the operational integrity of all controls during operations. For the AGS, Booster, Linac and EBIS, the following are the non-credited administrative controls in the ASE:

- Minimum Main Control Room (MCR), and Experimental Area Staffing Controls
    - C-AD does not require operators in the MCR for local EBIS operation (ASE). **Bases:** EBIS can be operated locally by system experts if the beam is not injected into the Booster where it can be transported to AGS and then to the RHIC or the NSRL.
    - Two qualified Linac Operators must be on duty in MCR for Linac-only operation with a beam (ASE). **Bases:** Linac operations are sufficiently simple that two operators can safely control the beam. Under these conditions, Linac beam is not injected into the Booster where it can be transported to AGS and then to the RHIC or the NSRL.
    - One qualified Operations Coordinator and one qualified operator must be on duty for all other beam operations (ASE). **Bases:** Once the MCR allows beam transport to other accelerators, i.e., the Booster and beyond, it is prudent to have an Operations Coordinator on duty coordinating the activities of the entire C-AD facility operating with a beam.
    - During normal operations, one of the two operators always must remain in the Main Control Room. (ASE). **Bases:** The expectation that the MCR is operational at all times during beam operations ensures that personnel are monitoring system operations, and that the operations always comply with the ASE's and the C-AD's

operating procedures. Additionally, operators can respond in a timely manner to off-normal conditions and emergencies.

  - Authorized Alternative: If one operator is incapacitated, the remaining operator may continue operations as long as the C-AD re-establishes operating requirements within two hours (ASE). **Bases:** Allowing time to replace an operator because of injury, illness, or an emergency, allows operations to continue at the discretion of the remaining operator. The C-AD bases these shift-controls on experience and engineering judgment. A single operator easily can stop beam operations should conditions arise that burden him or her.

- The minimum experimental-area staffing must be a qualified Collider-Accelerator Support (CAS) watch person for any EBIS, Linac, Booster, or AGS operations with a beam (ASE). **Bases:** This requirement assures that there are shift personal to respond to problems in the field outside the MCR. The C-AD bases this control on experience with many accelerators throughout BNL's history of operating large accelerators. The on-duty CAS watch communicates by radio with the MCR and the C-AD forwards alarms to the CAS radio. Normally, a CAS watch continuously makes rounds of all C-AD facilities.
- Accelerator and Experiment Modifications
  - Approved configuration control procedures must require a review of modifications against the Credited Controls in the ASE (ASE). **Bases:** This rule ensures that C-AD has a system to review modifications to the accelerator facility that potentially could violate the assumptions in the SAD safety analysis, or the ASE requirements.
  - The C-AD reviews each experiment in the AGS, Booster, Linac, EBIS, AGS Experimental Halls, U-line, and V-line for configuration control and safety before running the beam (ASE). **Bases:** This rule ensures that the C-AD adequately reviews experimental installations and modifications before initial operations with beam. These reviews are part of the configuration-management program assuring that these changes do not involve USIs, and do not violate ASE requirements.
  - An experiment dormant for longer than one year between runs does not require review during the dormancy period. Experiments that run more than once within 12-months must be reviewed as determined by the C-AD management before each single scheduled run (ASE). **Bases:** The annual review and the before-resumption of operation review after an extended shutdown ensure that Credited Controls and Supports are operational, and that only approved modifications were made. If the interval between runs is short, and it is certain that users made no experiment changes, then the C-AD's management may waive the pre-run review.
- The C-AD must document any modifications to the AGS, Booster, Linac, EBIS, and AGS Experimental Halls, U- line, and V-line, via the Unreviewed Safety Issue Determination (USID) process to determine if the proposed change could demonstrably increase the frequency or consequences of known hazards, or could introduce new ones. If a positive USID is identified, then the C-AD will not implement the modification without the DOE's approval (ASE). **Bases:** This ensures that the C-AD adequately reviews a modification before initiating operations. These reviews are part of the configuration management program ensuring that these changes do not involve USIs and do not violate the ASE's requirements. It also assures no changes occur that potentially might violate the assumptions in the safety analysis. The USID process would document the impacts of such changes, and

ensure the DOE's approval of a change to the ASE, should it be required, before effectuating the changes,

- Beam-loss-induced radiation within uncontrolled areas for credible repeated losses must be less than 100 mrem in a year. The C-AD shall use BNL's environmental TLD monitors to check the efficacy of the radiation control program (ASE). **Bases:** This rule ensures that the C-AD does not exceed the DOE's limit of 100 mrem per year to a non-radiation worker, thereby satisfying the requirements in DOE Order 458.1, Radiation Protection of the Public and the Environment.
- ODH area classification must comply with the requirements in BNL's SBMS Subject Area, ODH Classification/Controls (ASE). **Bases:** This order ensures that the C-AD analyzes and controls oxygen-deficiency hazards in conformity with the BNL Subject Area, Oxygen Deficiency Hazards.

5.8.The Bases for Credited Controls for Operating the Energy Recovery Linac (ERL)

The C-AD cannot exceed the maximum credible beam power of ERL without changing its structures, systems, and components (SSC). Changing them requires the C-AD management's authorization. The maximum credible beam power is related to the Credited Controls for radiation hazards.

5.8.1.Credited Controls for Maximum Credible Incidents - ASE Limits

For the ERL, the C-AD limits electron kinetic energy to 3.5 MeV for the super-conducting radio frequency (RF) gun (ASE). **Bases:** The C-AD used this value for electron-injection energy in their shielding analysis. The C-AD requires all engineered changes to undergo a safety analysis and review for a potential USI before exceeding 3.5 MeV.

The C-AD limited the power source of the superconducting gun to deliver no more than 1.5 MW to the gun (ASE). **Bases:** Even though the power rating of the superconducting gun is 1.0 MW at a rated average continuous beam-current of 200 mA, the average beam power is 0.7 MW. The C-AD used 1.5 MW as the ASE Credited Control since the C-AD employed this value in their shielding analysis.

The C-AD limited the electron kinetic energy's limit to 25 MeV for the Prototype ERL ring (ASE). **Bases:** This is the maximum ERL electron beam energy assumed in the shielding analysis. The ERL's staff cannot go above this level due to the limiting maximum accelerating gradient achievable with the existing 5-cell cavity. Engineered changes to the 5-cell cavity necessitate a safety analysis and a review for potential USIs if the ERL proposes an increase to the maximum accelerating gradient.

The C-AD restricted the electron beam power so that it may not exceed the equivalent of 10 MW of instantaneous power for the electron beam in the Prototype ERL ring (ASE). **Bases:** Based on the rated average continuous-beam current of 200 mA, the average beam power is 5.0 MW at maximum beam energy of 25 MeV. In their shielding analysis, the C-AD conservatively assumed 10 MW; hence, engineered changes must undergo a safety analysis and a review for a potential USI if the ERL proposes an increase in power to rise above 10 MW.

The C-AD limited the power source for the five-cell cavity to delivering to it a maximum of 60 kW of RF power (ASE). **Bases:** The restorative power of the 5-cell cavity's power supply

for maximum continuous beam-loss limits the maximum beam-power that can be lost. The rated power of the 5-cell cavity is 50 kW; however, the C-AD conservatively assumed 60 kW in the shielding analysis; accordingly, any engineered changes must undergo a safety analysis and a review for a potential USI if ERL proposes exceeding 60 kW.

The C-AD limited the beam power of the electron beam striking the beam dump to 1.5 MW for 3.5 MeV (ASE). **Bases:** The C-AD assumed the beam deposited 1.5 MW in the electron-beam dump, which defines the cooling requirements for operating the dump. In addition, the C-AD assumed this conservatively high power to evaluate whether ozone production was a potential safety issue in the ERL cave. During operations, the C-AD will measure ozone to determine if potential exposures are above the Threshold Limit Value of the American Conference of Governmental Industrial Hygienists (ACGIH). The C-AD requires any engineered changes to undergo a safety analysis and a review for a potential USI before going above 1.5 MW electron beam power.

5.8.2.Credited Controls for Radiation Hazards Due to Access

During beam operations, an access control system must prevent access to the beam (ASE). **Bases:** The ACS, the Credited Control for accelerator enclosures, prohibits access to beam; if access is forced, the ACS removes beam. The design of the ACS is fail-safe and configuration-controlled. The C-AD's Radiation Safety Committee approves any changes that might affect the reliability of the system's safety function.

5.8.3.Credited Controls for Oxygen-Deficiency Hazard

Engineered systems (interlocks and alarms) must be in place to minimize the likelihood of injury/illness from a release of inert gas (ASE). **Bases:** Potentially, the ERL's ~~blockhouse~~ accelerator enclosure and ~~pump room~~Cryogenic/Vacuum/Water Building may have an oxygen deficiency hazard when C-AD charges the system with cryogens. Should the system-pressure boundary fail, the credited control is the ODH protection system, comprising oxygen sensors, and an alarm system, along with an ODH fan in each area.

For the EEBA and NEBA parts of Building 912, near where ERL is located, there are alarms that trip to warn staff of a major leak from the cryogenic plant. This portion of the cryogenic controls for ODH has no active engineered protection system; that is, there are no exhaust fans.

5.8.4.Credited Control Supports to Protect Against Radiation

Before the beam or other radiation-producing operations begin (e.g., the electron gun testing or the operation and testing of the 5-cell cavity), prototype ERL enclosures must have all shielding properly in place and be configuration-controlled (ASE). **Bases:** The Radiation Safety Checklist is used to verify that all shielding assumed in the safety analysis is in place before beam operations begin each year, or after modifications to the shielding, thereby ensuring that no excessive radiation exposures occur.

During the beam or other radiation-producing operations (e.g., the electron gun, or 5-cell cavity operations and testing), the ERL ACS must be functional (ASE). **Bases:** This assures the functionality of those portions of the ACS that prevent exposure to the beam or to X-rays from operating RF cavities inside the enclosure. It also ensures the functionality to remove the beam when excessive beam loss occurs. The design of the ACS is configuration-controlled, and the C-AD requires that the C-AD Radiation Safety Committee first approve any changes that might affect the reliability of the system's safety function. The ACS is fail-safe, redundant, and functionally tested in accordance with the Radiological Controls Manual.

During the beam or other radiation-producing operations, areal radiation monitors interface with the ERL ACS to remove beam when they sense excessive beam loss (ASE). **Bases:** The calibration of these monitors must be up-to-date. The operability and placement of radiation monitors interfaced with the ACS ensures no one receives excessive radiation from routine beam-loss and beam faults. The C-AD does not consider a radiation monitor operable unless its calibration is current.

During the beam or other radiation-producing operations, the locations of area radiation monitors interfaced with the ERL Access Control System must be configuration-controlled (ASE). **Bases:** Configuration control of radiation monitors ensures that they are properly located so that the sensed dose-rate provides the ACS and the MCR's operations staff with accurate alarms. Each ACS radiation monitor has a built-in, keep-alive source that enables the ACS to continuously sense and react should a radiation monitor become disconnected or has failed. When the C-AD replaces or adds a radiation monitor, the C-AD's RCTs use an independent radioactive source to verify the monitor sends it output signals to the correct readout location in MCR.

5.8.5.Credited Control Supports to Protect Against an ODH

When the C-AD charges the ERL accelerator enclosure (ERL blockhouse) components~~system~~ with cryogens, the exhaust fans and the ODH portion of the ERL's ACS must be operable, that is, when the oxygen concentration falls below 18% (nominal) in either the ERL blockhouse or the ERL Compressor/Vacuum/Water Building~~pump room~~, the associated ODH fan turns on (ASE). **Bases:** The failure of the pressure boundary of the ERL cryogenic system in the blockhouse or Compressor/Vacuum/Water Building~~pump room~~ could release all the cryogens within these enclosed areas, thereby rapidly causing an oxygen deficiency in the immediate area. An alarm provides sufficient warning to evacuate the area and avoid injury. A spill rate of 3400~~3275~~ SCFM from a 1-inch copper LN~~LN2~~ transfer line is the bounding credible release-rate in the blockhouse; accordingly, with a minimum ODH exhaust-fan capacity of 12,000~~13,750~~ SCFM, the oxygen concentration there never falls below 15~~16~~%. Conservatively assuming a complete failure of a 500 L Dewar in the blockhouse, the oxygen level would decline to about 11%. Even assuming a conservative probability of the pressure boundary's failure to initiate the inert gas release, in both cases, the area remains classified as ODH 0. In the event of such a release in the Compressor/Vacuum/Water ~~pump room~~Building, the bounding credible release of 615~~1150~~ SCFM would result only from a rupture of the main helium compressor~~a Kinney vacuum pump discharge~~ line. With a minimum ODH exhaust-fan capacity of 2000~~4850~~ SCFM, the Compressor/Vacuum/Water Building's~~pump room's~~ oxygen concentration never will

fall below 14.5~~16~~%. Hence, assuming a conservative probability of the pressure boundary failure to initiate the release of the inert gas, the area remains classified as ODH 0.

Authorized Alternative: If either exhaust fan is not operable, or the ODH portion of the ERL ACS is out-of-service, entry to the affected ERL's block house or pump room is allowed only if each entrant has their own 5-minute escape pack (or a self-contained breathing apparatus), and a portable oxygen-monitor (POM) (ASE). **Bases:** A POM and a 5-minute escape pack (or a self-contained breathing apparatus) are just as effective as ODH monitors and an exhaust fan system; thus, equipping each individual with this PPE when entering the posted ODH area does not to heighten the risk of exposure to oxygen deficiency. The affected areas are small, and the C-AD trains personnel in using the PPE and evacuation procedures. The C-AD considers the risk negligible for individuals failing to use the PPE and evacuate in a release event. The Access Controls Group is responsible for restoring the installed protection system to operation, but there is no time limit on using this Authorize Alternative in place of the installed system. The Authorized Alternative allows continued testing of the prototype ERL without affecting the program. Considering the anticipated non-shift program for the ERL, the C-AD determined that C-AD workers could restore a failed ODH protection system soon after the failure of an ODH system.

~~If the 11000 gallon LN tank line in Building 912 is charged with LN and the supply tank is not isolated from the building,~~ If the liquid nitrogen supply line inside Building 912 is charged with LN and this line is not isolated from the 11,000 gallon liquid nitorgen (LN) tank, then the installed building oxygen monitors in EEBA and NEBA must alarm locally when the oxygen concentration falls below 18% (nominal). **Bases:** This line is 1-inch and because of the 11000 gallons available, a release of this large amount of LN as N_2 gas can reduce the oxygen concentration to low levels. In order to warn personnel to evacuate the area, local oxygen sensors that alarm at 18% (nominal) are installed in EEBA and NEBA.

Authorized Alternative: Upon discovery that either the NEBA or EEBA oxygen monitors are out of service, entry is allowed to the affected part of Building 912 if each entrant has and uses their own portable oxygen monitor (POM). **Bases:** A POM is just as effective as installed ODH monitors. Thus, equipping each entrant with a POM does not expose an individual to greater risk. The C-AD Access Controls Group is responsible to restore the installed oxygen monitors to operation, but there is no time limit for POM use. Thus, this Authorized Alternative allows continued work at ERL and the surrounding areas without affecting the program. Considering the non-shift type mission/program for ERL, C-AD determined that the Access Controls Group could restore the monitor(s) soon after a failure. If the LN tank is isolated such that no LN can enter Building 912, then the ODH sensing devices are not required to be operable and POMs are not required.

5.8.6.Calibration, Testing, Maintenance, and Inspections that Support Credited Controls

Calibration, maintenance, and testing of Credited Controls and Supports ensure that they are in place during beam operations as the SAD safety analysis assumes.

The C-AD functionally tests the ACS in accordance with the requirements in BNL's Radiological Control Manual (ASE). **Bases:** BNL's Radiological Control Manual requires the semi-annual testing of the ACS, including a functional check of the interlocking area's radiation monitors; semi-annual testing is acceptable based on the failure rates and reliability studies for

this redundant equipment. Extensions for operational flexibility require the approval of the Manager of the Radiation Controls Division.

The C-AD requires the area radiation monitors to undergo an annual calibration not exceeding 15 months using an extension request. (Section 5.7.6 details the bases for 15 months).

If the C-AD charges the system with cryogens, then the ventilation exhaust fans and associated oxygen monitors used to mitigate an oxygen-deficiency event must undergo annual testing, which must not to exceed 15 months. (Section 5.7.6 details the bases for 15 months).

Radiological shielding and barriers (e.g., shield blocks, and fencing) must undergo visual inspection before operations to ensure that they are in place and functional. Section 5.7.6 gives the bases for visually inspecting shielding and barriers.

5.8.7.Administrative Controls

While C-AD does assume that non-compliance with non-credited administrative controls is a violation of the ASE, administrative controls provide defense-in-depth to help ensure the operational integrity of all controls during operations. For the ERL, the following are the non-credited administrative controls in the ASE:

- Minimum Prototype ERL Control-Room Staffing Controls
  - One qualified Operator and one other person (i.e., ERL Operator-in-Training, or ERL Physicist) must be on duty when the Prototype ERL beam is operating. During beam operations, one of these two people must remain at all times in the Prototype ERL Control Room (ASE). **Bases:** The C-AD requires the ERL Control Room be operational during beam operations to ensure that personnel are monitoring to ensure ERL safety systems remain in compliance with the ASE, to ensure adherence to the departmental operating procedures, and to ensure that personnel can respond in a timely manner to off-normal conditions and emergencies.
  - Authorized Alternative: If the extra person (i.e., the ERL Operator-in-Training or the ERL Physicist) is incapacitated, the Trained Operator may continue operations as long as the C-AD restores these operating requirements within two hours (ASE). **Bases:** Allowing time to replace the extra operator allows operations to continue at the discretion of the remaining Trained Operator. The C-AD bases these shift-requirements on experience at BNL's other accelerators, and on engineering judgment. A single Trained Operator can stop beam operations easily should conditions arise that burden him or her.
- Prototype ERL Modification and Controls
  - Approved configuration control procedures must ensure the review of modifications against the Credited Controls in the ASE (ASE). **Bases:** This ensures that C-AD has a system to review all modifications to the accelerator facility that potentially could violate the assumptions in the SAD safety analysis, or the ASE requirements.
  - C-AD reviews each experiment, or any modification of the ERL for configuration control and safety before running the beam (ASE). **Bases:** This ensures that the C-AD adequately reviews all installations and modifications before the initial operations with beam. These reviews are part of the configuration management program assuring these changes do not involve USIs and do not violate ASE requirements.

- An experiment that lies dormant for more than one year between runs does not require review during this period. Experiments that may run more than once within 12 months require review as determined by the C-AD's management before each single scheduled run (ASE). **Bases:** The annual operations review, or that before resumption of operation after an extended shutdown ensure that Credited Controls and Supports are functional and only approved modifications occurred. If the interval between runs is short, and it is certain that users made no experimental changes, then the C-AD's management may waive the pre-run review.

- The C-AD, using the Unreviewed Safety Issue Determination (USID) process, must document modifications of the ERL that are determined to increase the frequency or consequences of known hazards, or which introduce new ones. If a positive USID exists, the C-AD does not implement the modification without the DOE's approval (ASE). **Bases:** This ensures that the C-AD adequately reviews a modification before initial operations. These reviews are part of the configuration- management program that assures these changes do not involve USIs or violate ASE requirements. It also guarantees that no changes occur that could violate the assumptions in the safety analysis. The USID process would document the impacts of such changes, and would secure the DOE's approval of any required change to the ASE before the changes go into effect.
- Beam-loss-induced radiation within uncontrolled areas for credible repeated losses must be less than 100 mrem in a year. The C-AD shall use BNL's environmental TLD monitors to check the effectiveness of their radiation-control program (ASE). **Bases:** This ensures that C-AD does not exceed the DOE's limit of 100 mrem per year to a non-radiation worker. This satisfies the requirements in the DOE Order 458.1, Radiation Protection of the Public and the Environment.
- ODH area classification must comply with the requirements in BNL's SBMS Subject Area, ODH Classification/Controls (ASE). **Bases:** This ensures that C-AD analyzes and controls oxygen-deficiency hazards in accord with BNL's Subject Area, Oxygen Deficiency Hazards.

5.9. The Bases for Credited Controls for RHIC Operations

5.9.1. Credited Controls for Maximum Credible Incidents - ASE Limits

This section details the Credited Controls that limit the RHIC accelerator's operations to protect the environment, workers, and the public. The C-AD operates the s RHIC within the assumptions in the current C-AD SAD. The following limits are the maximum beam energy and the number of particles that a Ring at RHIC is capable of containing. The C-AD cannot operate the accelerator beyond these Credited Controls without changing the RHIC's structures, systems, and components (SSCs), which would require authorization by the C-AD's management.

For heavy ions with mass numbers from 2 to 238, their maximum number in each ring must not exceed the equivalent of $5x10^{11}$ Au ions at 120 GeV/u (ASE). **Bases:** This is the number and energy of heavy ions assumed for all dose- and dose rate-calculations in the SAD. The Radiation Safety Committee (RSC) must approve the limits for each new species and ion energies before injection. In addition to ensuring the shielding is appropriate for each new ion species and energy, the RSC approves fences or other barriers to prohibit access to areas where shielding is not feasible such as a ventilation shaft. Equivalent means that the species' intensity and energy would yield a dose and dose rate that do not exceed that computed for the stated gold values.

The maximum number of protons in each ring must not exceed the equivalent of $5x10^{13}$ at 300 GeV (ASE). **Bases:** This is the number and energy of protons assumed for all dose- and dose rate-calculations in the SAD. The RSC must approve the limits for different energy and number of protons in each ring before their injection. Equivalent means that the mix of number of protons and energy would yield a dose and dose rate that do not exceed that computed at the stated values.

5.9.2. Credited Controls for Radiation Hazards Due to Access

During operations with beam or the RF in RHIC, the relevant access-control system must prevent access to the RHIC tunnel or the RF enclosure (ASE). **Bases:** The ACS is the Credited Control for the accelerator enclosures, and it prohibits access to the beam; if access is forced, the ACS removes the beam or power to the RF cavities. The C-AD employs a configuration-management system for the access controls system, and the C-AD Radiation Safety Committee approves all changes that may affect the reliability of the system's safety function.

5.9.3. Credited Controls for Oxygen-Deficiency Hazard

Engineered systems (interlocks and alarms) must be in place to minimize the likelihood of injury/illness from a release of inert gas (ASE). **Bases:** The Collider tunnel and the RHIC refrigerator building 1005R have the potential for an oxygen-deficiency hazard. In the former, the C-AD protects STAR and PHENIX intersection regions from the intrusion of inert gas with gas barriers; thus, ODH is not a factor in these two tunnel areas. The RHIC's compressor building, 1005H, and the six service buildings with the valve boxes are not ODH areas as per SBMS criteria. However, the C-AD posts them ODH 0 and has installed operable ODH sensors and ODH fans to raise the staff's awareness of the large volumes of helium liquid and gas in-

process inside these buildings. Exhaust fans minimize any significant reduction of oxygen in the buildings from helium releases. The Credited Controls are the exhaust fans, oxygen sensors, and alarm system in the refrigerator building and the Collider tunnel since these areas may exhibit significant reduction in oxygen concentration should the magnet or refrigerator-system pressure-boundary fail.

5.9.4.Credited Controls for Fire Hazard

The C-AD must provide manually initiated exhaust fans to exhaust smoke in the RHIC tunnel during occupancy (ASE). **Bases:** Although fire and smoke are standard industrial hazards, the C-AD deemed smoke removal in the collider tunnel as non-standard due to the size of the tunnel. Locating the source of smoke quickly may prevent the initiation of other problematic events such as a helium release.

Flammable-gas detection systems in the Intersecting Regions (IRs) for STAR and PHENIX must be operational during running periods when flammable gases are in the experimental detectors (ASE). **Bases:** Flammable gas is a standard industrial hazard. However, the C-AD determined that the large volumes of flammable gas in STAR and PHENIX are non-standard and identified gas detection as a Credited Control.

5.9.5.Credited Control Supports to Protect Against Radiation

If the calculated annual activity concentration of sodium-22 in the leachate exceeds 25% or tritium exceeds 5% of the Drinking Water Standard, the C-AD protects groundwater via placing a soil cap over an activated soil shielding. BNL's management may waive a cap requirement if justified by the C-AD (ASE). **Bases:** This satisfies the SBMS's Design Practice for Known Beam Loss Locations and the permanent BNL Waiver 2010-4, and keeps ALARA the potential groundwater contamination caused by activated soil leachate. If the C-AD needs a waiver, the deviation must be justified to BNL management who must approve it before allowing the change. Personnel health or safety is not a significant consequence of contaminating the groundwater. However, BNL loses credibility with regulators and the public should an event occur. No on-site drinking water supply are in the path of a groundwater plume and it would take more than 20 years for contaminated groundwater to travel beyond the BNL's site boundary, allowing time for remediation should a groundwater plume be created.

<u>Authorized Alternative</u>: If C-AD discovers a breach in an installed cap, the alternative equivalent protection approved by the C-AD's management must be in place within 10 days of the discovery, and permanent repair to the cap must be initiated as soon as practicable (ASE). **Bases:** Sodium-22 and the tritium are present in the soil even when the accelerator is off. Thus, the C-AD requires cap integrity at all times. Rainfall drives leachate into the groundwater. The C-AD bases the estimates of potential contamination on the annual amounts of rainfall. Furthermore, a crack or breach in a cap normally is a tiny fraction of its total area. Only a small fraction of the sodium-22 and tritium covered by the cap can move into groundwater during a breach over 10 days. Experience showed that the resulting ribbon of contamination dilutes from dispersion and radioactive decay as it moves toward the BNL site boundary. Waiting 10 days to repair a breach does not cause a significant increase in risk to workers or the public; C-AD repairs breaches as soon as practicable. The 10 days allow for planning and implementing the

most effective repair. If the breach is large, a temporary plastic cover that C-AD used effectively in the past goes in place as soon as possible to minimize the potential contamination in groundwater.

Before beam or other radiation-producing operations (e.g., RF testing), the Collider and beam-line enclosures must have all shielding (e.g., berms, shield blocks) and barriers properly in place and configuration-controlled (ASE). **Bases:** This control documents the visual verification that all shielding and barriers assumed in the safety analysis are in place before starting beam operations, so ensuring that there are no excessive radiation exposures.

During beam operations, the RHIC Access Controls System (ACS) must be functional; accordingly, when there is excessive beam loss, or x-rays from RF cavity operations, those portions of the ACS preventing exposure to beam radiation or to RF-generated x-rays inside enclosures must remove beam or turn off RF power (ASE). **Bases:** The ACS for RHIC ensures that there will not be exposure to excessive radiation from beam or RF generated x-rays. The ACS is fail-safe, redundant, and functionally tested in accordance with the Radiological Controls Manual. The design of the ACS is configuration controlled. The C-AD Radiation Safety Committee must approve changes that may affect the reliability of the ACS's safety function.

During RF-only operations, the 4 o'clock portion of the RHIC ACS must be functional (ASE). **Bases:** The ACS for the RHIC guarantees that no exposure to excessive radiation from RF-generated x-rays during testing and conditioning of the RF cavity at the 4 o'clock area of the tunnel. The C-AD interlocks the power supplies for the cavities to the ACS system, assuring the capability of stand-alone running when the Collider beam is not in operation. At full power, measured dose rates range between 25- to 200-rad/h at 1 foot from the RF cavity.

During beam or RF operations, the C-AD must interface area radiation monitors with the ACS to remove beam should excessive loss occur, or turn off the RF when there is excessive x-ray radiation. These area radiation monitors must be within their calibration date (ASE). **Bases:** The operability and placement of radiation monitors interfaced with the ACS ensures no excessive exposure to personnel from radiation from routine beam loss and beam faults. C-AD considers a radiation monitor operable when it has up-to-date calibration or it has a waiver extending its calibration due date. If the Radiological Control Manager approves such a waiver, then the waiver is the documentation that the radiation monitors are operable, and the calibration stickers do not apply during the period of the waiver

During operations with beam or RF cavities, the locations of area radiation monitors interfaced with the RHIC ACS must configuration-controlled (ASE). **Bases:** Configuration control of ACS radiation monitors ensures that they are in the proper locations so that the sensed dose-rate provides the MCR's operations staff with accurate alarms. Each ACS radiation monitor has a built-in keep-alive source enabling the ACS to continuously sense and react to a disconnected or failed radiation monitor. When the C-AD replaces or adds new ones, the C-AD RCTs test them using an independent radioactive source to verify that the monitor sends it output signals to the correct readout location.

Either RHIC's ACS or the Radiation Safety LOTO of appropriate critical devices must prevent the Linac's H^- high-intensity source from transporting protons to the W-line (ASE). **Bases:** Preventing the high-intensity proton source from Linac from entering the W-line ensures that dose rates and doses at Thomson Road near RHIC, an uncontrolled area for radiation protection, are within the risks computed in the SAD. Using interlocks or Radiation Safety

LOTO is equally effective. This requirement is on the Radiation Safety Checklist for sending the beam to the W-Line.

5.9.6.Credited Control Supports to Protect Against an ODH

When the cool-down to below room temperatures of the superconducting-magnet cryogenic-system begins, at least three ODH exhaust fans in the RHIC Compressor Building (1005H) must be operational (ASE). **Bases:** Although basing this requirement on refrigerator cool down is a conservative approach, it ensures that the controls are in place. Even with four ODH fans for the compressor building, in the baseline ODH calculation, the C-AD assumes only three are operable. The resulting steady-state oxygen concentration is 19.3%; assuming only two operating fans, the value drops to 18.8%. Due to the large helium inventory in this building, the C-AD decided to post 1005H as an ODH 0 area to make staff aware of the hazards.

When the superconducting-magnet cryogenic-system cool-down starts, the ODH portion of the RHIC Access Controls System in Building 1005H must be operable; that is, when oxygen concentration falls below 18% (nominal), the ODH fans must turn on (ASE). **Bases:** The C-AD assumed that the ODH fans started 1 minute after the release of the inert gas and that the trip point was 18% oxygen. Tests revealed that the ODH fans start and are up to full capacity in less than 30 seconds after sensing 18% oxygen.

Authorized Alternative: If less than three ODH fans are operable in 1005H or the ODH portion of ACS is out-of-service, entry is allowed if each entrant has their own 5-minute escape-pack (or a self-contained breathing apparatus), and a portable oxygen monitor (ASE). **Bases:** If less than three fans are operable or the ODH system is out-of-service, the C-AD treats the area as an ODH 1 area, and requires staff entering the building to have ODH PPE. A portable oxygen monitor (POM) is as effective as the installed monitor and alarm system; thus, requiring each individual to wear a POM to enter the posted ODH area does not affect the risk of suffering from oxygen deficiency.

When liquid helium is in the liquid helium pots in the RHIC Refrigerator Building (1005R), at least one ODH exhaust fan must be operational (ASE). **Bases:** Even though there are two ODH fans in 1005R, one allows sufficient time for individuals to exit safely after hearing the ODH alarm. It takes 5 minutes for the oxygen concentration to decrease to a value requiring this building to have ODH 1 controls with one fan operating; thus, the C-AD posts 1005R ODH 1 when operating.

Similarly, with liquid helium in the pots, the ODH portion of the RHIC ACS must be operable, viz., when the oxygen concentration falls below 18% (nominal), the ODH fans must turn on (ASE). **Bases:** When calculating the minimum oxygen concentration during the transient, the C-AD assumed that the ODH fans start 1 minute after the inert gas is released, assuming an 18% oxygen trip point. Tests demonstrated that the ODH fans start and are up to full capacity in less than 30 seconds of sensing 18% oxygen.

With liquid helium in the pots in 1005R, each entrant has their own 5-minute escape pack (or a self-contained breathing apparatus) and a portable oxygen monitor (ASE). **Bases:** For ODH-1 spaces, BNL's SBMS requires an escape pack and a POM for each entrant due to the increased risk of low oxygen-concentration. C-AD trains all ODH-1 qualified individuals periodically to inspect and use escape packs and POMs; they also must pass a physical exam to ensure that they are physically fit to escape safely from an area experiencing an ODH event.

Authorized Alternative: If no ODH fan is operable in the Refrigerator Building or the ODH portion of the RHIC ACS is out-of-service, then the C-AD allows entry to an entrant with a self-contained breathing apparatus and a portable oxygen monitor (ASE). **Bases:** If no fans are operable or the ODH system is out-of-service, the C-AD allows entry to the building only to entrants wearing a self-contained breathing apparatus (SCBA). The SCBA is required with no fans operable because the oxygen concentration would fall rapidly to a very low value; the SCBA ensures that the individual does not experience adverse effects from this. If the building's oxygen sensors fail, the fans would not start at the 18% trip point; in this situation, the SCBA ensures that the individual suffers no adverse effects. A portable oxygen monitor (POM) is as effective as the installed oxygen-monitor and alarm system; thus having each individual wear a POM on entering the building prevents the risk of exposure to oxygen deficiency.

When the C-AD cools the superconducting magnet cryogenic system below 80 K, at least three ODH exhaust fans in each RHIC tunnel sextant must be operational (ASE). **Bases:** The low density of helium assures that above 80 K, it takes hours for a leak to reduce the oxygen concentration below 18% in the tunnel. However, calculations showed that if the helium was at 40 K, the oxygen concentration in a tunnel sextant would to fall to 18% in 18 minutes. At that point, the exhaust fans would start and the minimum oxygen concentration would not be less that 17.9%. Thus, a helium temperature of 80 K is a conservative value for ODH-0 controls to be in place in the tunnel. Even though each sextant has from 4 to 6 ODH fans, the safety analysis conservatively assumed only 3 fans were operable.

When the C-AD cools the superconducting magnet cryogenic system below 80 K, the ODH portion of the RHIC ACS in the tunnel sextants must be operable, i.e., the ODH fans must turn on when the oxygen concentration falls below 18% (nominal) (ASE). **Bases:** In evaluating the minimum oxygen concentration during the transient, the C-AD assumed the ODH fans would start 1 minute after release of the inert gas, with the trip point at 18% oxygen. Tests demonstrated that the ODH fans start and reach full capacity in less than 30 seconds after sensing 18% oxygen.

Authorized Alternative: If less than three ODH fans are operable or the ODH portion of the RHIC ACS is out-of-service in a sextant, the C-AD allows entry if each entrant has their own 5-minute escape pack (or a self-contained breathing apparatus) (ASE). **Bases:** If less than three fans are operable or the ODH system is out-of-service, C-AD treats the area as an ODH 1 area, and requires ODH PPE to enter the tunnel. A portable oxygen monitor (POM) is as effective as the installed monitor and alarm system; thus, having each individual wear a POM when entering the posted ODH area has no effect on the risk of exposure to oxygen deficiency.

For the RHIC's tunnel sextants when the C-AD cools the superconducting magnet cryogenic system below 40 K, at least three ODH exhaust fans in each RHIC tunnel sextant must be operational (ASE). **Bases:** At 40 K down to the operating temperature of 4.5 K, the density of helium is much greater than at higher temperatures so requiring ODH-1 controls. The ODH 1 classification of the RHIC tunnel depends on the fatality rate from the failure of a pressure boundary failure for the helium system, viz., 2.6×10^{-6}/h. The fatality rate, in turn, depends upon the product of the likelihood of the helium release, P, and the fatality factor, F. The assumed oxygen transient results in a very low oxygen-concentration, such that the fatality factor is equal to 1; accordingly, the fatality rate solely depends on the likelihood of a helium release (2.6×10^{-6}/h). Even though each tunnel sextant has from 4 to 6 ODH fans, the safety analysis conservatively assumed only 3 fans were there.

For RHIC tunnel sextants when C-AD cools the superconducting magnet cryogenic system below 40 K, the ODH portion of the RHIC Access Controls System must be operable, that is, when the oxygen concentration falls below 18% (nominal), the ODH fans therein must turn on (ASE). **Bases:** When calculating the minimum oxygen concentration during the transient, the C-AD assumed the ODH fans to start 1 minute after the release of the inert gas with a trip point at 18% oxygen. Tests showed that the ODH fans start and reach full capacity in less than 30 seconds of sensing 18% oxygen.

For RHIC tunnel sextants when the C-AD cools the superconducting magnet cryogenic system below 40 K, each individual entering the tunnel must have a 5-minute escape pack (or a self-contained breathing apparatus), and a portable oxygen monitor (ASE). **Bases:** These are the controls required by SBMS for ODH-1 areas. Testing verified that 5 minutes would allow sufficient time to escape safely from the tunnel area. Walking slowly from the worst location in the tunnel, it took less than 3 minutes reach the exit.

Authorized Alternative: If less than three ODH fans are operable, or the ODH portion of the RHIC's ACS is out-of-service in a sextant, entry to that sextant is allowed if the each person has their own 5-minute escape pack (or a self-contained breathing apparatus) and a portable oxygen monitor (ASE). **Bases:** If less than three fans are operable or the ODH system is unserviceable, the C-AD treats the sextant as an ODH 1 area and requires an ODH-1 PPE to enter. A portable oxygen monitor (POM) is just as effective as the installed monitor and alarm system; thus, requiring each individual to wear a POM when entering the posted ODH area does not affect the risk of exposure to oxygen deficiency.

For RHIC tunnel sextants when the 80 K Cooler is operating, at least three ODH exhaust fans in each RHIC tunnel sextant must be working (ASE). **Bases:** Assessments of the oxygen concentration transient following a major breach in the helium pressure boundary during 80 K cooler operation demonstrated that exhaust fans would not need to be operational if the C-AD follows the SBMS's ODH subject area. However, the C-AD management determined that at least 3 operable fans are necessary to have confidence that people can be safely evacuated from the affected area.

For RHIC tunnel sextants with the 80 K Cooler operating, the ODH portion of the RHIC's ACS must be operable; that is, when the oxygen concentration falls below 18% (nominal), the ODH fans in that sextant must turn on (ASE). **Bases:** When the tunnel's magnet loop is at 80 K, the time for a tunnel sextant to meet the SBMS criteria to classify as an ODH-0 area, using a conservative pressure boundary failure-rate, would be 34.3 minutes from leak initiation. This would allow 21.5 minutes for evacuating the tunnel following the ODH alarm trip at 18% oxygen concentration. These values do not take credit for any ODH exhaust fans.

Authorized Alternative: If less than three ODH fans are operable in a sextant, or the ODH portion of the RHIC ACS is out-of-service, the C-AD allows entry to that sextant if each entrant has their own 5-minute escape pack (or a self-contained breathing apparatus) and a portable oxygen monitor (ASE). **Bases:** If less than three fans are operable, or the ODH system is out-of-service, the C-AD continues to treat the area as an ODH 0 area. A portable oxygen monitor (POM) is just as effective as the installed monitor and alarm system; thus requiring each individual to wear a POM when entering the posted ODH area has no effect on the risk of exposure to oxygen deficiency.

Individuals may enter the RHIC tunnel when the helium temperature in magnets is below 40 K if the RHIC magnet's main power is limited to supply a current of ≤ 530 amperes. The C-

AD assures this restriction by enabling the over-current trip circuitry, or by locking the power supplies out (ASE). **Bases:** The purpose of this procedure is to limit the energy available to an electrical fault to less than 1 MJ when personnel enter the tunnel. The probability of a cryogenic helium release into the tunnel increases if the RHIC magnet's main power supplies energize to their full operational level of 100 MJ, i.e., the energy that is stored in each of the ring's magnetic fields. Limiting the energy to below 1 MJ reduces the probability of a significant electrical arc in a main magnet that could cause the failure of the magnet helium pressure-boundary.

Authorized Alternative: The C-AD's Department Chair, Chief Electrical Engineer, and the ESH Coordinator must approve in writing if the Main Magnet power supply currents require an increase above 530 amperes while there are personnel in the RHIC tunnel. Work Planning must document controls to minimize this situation's hazard (ASE). **Bases:** Recognizing that certain testing or trouble shooting of equipment in the RHIC tunnel must take place, this allows entry with >1 MJ of energy in the magnets provided that qualified authorized management personnel first review and approve the work plan to minimize risks to the extent practicable.

5.9.7.Credited Control Supports to Protect Against Smoke Inhalation in the RHIC Tunnel

C-AD may allow personnel to occupy the RHIC tunnel enclosure if workers can activate the exhaust fans in the occupied area during a fire or smoke emergency (ASE). **Bases:** This requirement ensures that the exhaust fans are available to remove smoke if there is a fire. This conservative requirement reflects the very low fire loading in the RHIC tunnel, and gives the BNL Fire/Rescue Group a way to remove smoke rapidly from the affected area.

Authorized Alternative: If the exhaust fans in an occupied area are inoperable, then C-AD must take actions to remove all personnel from the occupied area within four hours. The C-AD must prevent occupancy until the fans are operable; however, workers may enter the affected area using PPE, as required by work planning, to restore the fans to operability (ASE). **Bases:** The 4-hour grace period allows workers time to place equipment in a safe condition before C-AD prohibits occupancy of the RHIC tunnel. Experienced engineering judgment is that the risk of a significant tunnel fire is insignificant during the 4-hours allowed to removing personnel from the area.

5.9.8.Credited Control Supports to Protect against Flammable Gas Hazards at STAR

Whenever flammable gas is in the integrated detector positioned in the intersecting region (IR), the flammable gas detection systems of both STAR and the RHIC ACS must be operational (ASE). **Bases:** There are two redundant systems, one is part of the RHIC ACS, and the other is part of the experimental system's instrumentation.

Authorized Alternative: Within 2 hours of discovering the presence of a flammable gas, and, if requested by the STAR Experimental Shift Leader, the C-AD Chair or designee may allow partial or full inoperability of either one of the two flammable-gas detection systems for up to 80 hours. The C-AD must determine if the benefit of continuing the STAR detector's operations outweighs the potential risk of damaging the STAR experiment. Operating procedures must specify the compensatory actions taken during inoperability (ASE). **Bases:** The two hours allows time to obtain approval from the C-AD Chair or designee. The two systems are redundant, so operating with one of them ensures that detection of flammable gas remains available. C-AD chose 80 hours so that one of the two systems could be out-of-service over a 3-day weekend without interrupting the experimental program. Because one flammable gas system still is operating, the risk to people is minimal.

Whenever flammable gas is in the integrated detector positioned in the IR, and if the Silicon Detectors are functioning, then the Inner Field Cage detector's ventilation system must be delivering airflow (ASE). **Bases:** The detector's ventilation-system supplies conditioned air through the detector's inner field cage to prevent pooling of any potentially leaking flammable gas. If the system fails, STAR turns off the FTPC, TPC, and the Silicon Detectors, if present, thereby removing the ignition source and minimizing the possibility of a fire.

Whenever flammable gas is in the integrated detector within the IR, at least one of the two IR emergency exhaust fans connected to the RHIC's Access Controls System must be operable (ASE). **Bases:** Both redundant fans start automatically either when the flammable-gas-detection trips or when manually started by the experimenter. They rapidly exhaust the STAR IR's volume of flammable gas to reduce fire risk.

Whenever flammable gas is in the integrated detector positioned in the IR, STAR must maintain a minimum of 1775 ft^3 of inert purge gas to dilute the detector's volumes of flammable gases below 25% of the Lower Explosive Limit (ASE). **Bases:** The TPC at STAR has the barely flammable P10 gas (90% argon, and 10% methane). Purge gases are argon from LAr, and nitrogen from LN2. To reduce the detector's content to < 25% of the LEL requires 1775 ft^3 of inert gas. The total purge gas inventory for STAR is 22,500 ft^3. While running, STAR does not allow this inventory below a LAr level of 30 inches. Conservatively assuming that the purge-gas inventory is at the 20-inch level, and the only available purge gas is the smallest volume argon gas, this still leaves 15,000 ft^3 to purge the TPC detector; thus, there is always at least eight times the inventory needed to reduce the flammable gas in the TPC detector to < 25% LEL.

Whenever flammable gas is in the integrated detector in the IR, the TPC gas used in the detector must be P-10 or its equivalent. The C-AD must approve equivalent hazardous gases before using them (ASE). **Bases:** P-10 gas is 90% argon and 10% methane, and the DOT considers P10 nonflammable; however, the Bureau of Mines found that it can ignite and burn if the methane diffuses out and the argon becomes concentrated. There are no specific exposure limits for its methane content. The C-AD maintains oxygen levels above 19.5% for routine work, and the release of P10 into the IR would not reduce oxygen below that level. The hazard of

concern has been the potential flammability of this gas. The MSDS for this gas states that it is a colorless, odorless, non-flammable gas mixture. The main health hazard from releasing this gas mixture is asphyxiation due to the displacement of oxygen because both components of this mixture are simple asphyxiates. Requiring C-AD approval to change the gas ensures un-reviewed safety hazards do not enter in the IR.

Whenever flammable gas is in the integrated detector positioned in the IR, when STAR powers the electronics in the integrated detector in the IR, the detector's Highly Sensitive Smoke Detection (HSSD) system, or the ceiling level HSSD system must be operational (ASE). **Bases:** An HSSD system senses low-levels of smoke from many locations and sounds a fire alarm; either one of these systems provides the same early detection of a fire. The HSSD is optimum for the detector because the experimental IR is a large volume, encompassing many small areas that need smoke detection. Instead of using many inexpensive inherently low sensitivity point smoke detectors, the C-AD installed an HSSD system that consists of a single, more sensitive detector and an air sampling system to cover the required volume. The latter consists of a length or lengths of pipe along which are strategically placed sampling holes. A small fan draws air along the pipe from the sampling holes and through the detector-measuring chamber. The detector is stable, reliable, and much more sensitive than a point smoke detector. High sensitivity means that they detect smoke at a much earlier stage in the development of a fire, and so may considerably reduce damage levels. The STAR-operated HSSD system senses the tight areas internal to the particle detector. The ceiling-level HSSD system is part of BNL's fire-detection system. Neither HSSD alarms start the IR's emergency exhaust fans. If the fans started, they would feed fresh air to the fire.

5.9.9.Credited Control Supports to Protect against Flammable Gas Hazards at PHENIX

Whenever flammable gas is in the integrated detector positioned in the IR, the flammable-gas detection systems in both PHENIX and the RHIC ACS System must be operational (ASE). **Bases:** Because of the large volumes of flammable gases, the ASE includes Credited Controls for this hazard. There are two redundant systems; one is part of the RHIC ACS, and the other is part of the experiment-system instrumentation.

<u>Authorized Alternative:</u> Within 2 hours of discovery, and if requested by the PHENIX Experiment Shift Leader, the C-AD Chair or designee may allow partial- or full-inoperability of either one of the two flammable-gas detection systems for up to 80 hours with flammable gas present. The C-AD must determine if the benefit of continuing operations of the PHENIX detector outweighs the potential risk of damaging the PHENIX experiment. Operating procedures must specify the compensatory actions taken. **Bases:** The two hours allows time to obtain approval from the C-AD Chair or designee. The two detection systems are redundant, so operating with one still ensures the availability of flammable-gas detection. The 80 hours suffices for one of the two systems to be unserviceable over a 3-day weekend without interrupting the experimental program. Because there is still one operational flammable-gas detection system, the risk to people is minimal.

Whenever flammable gas is in the integrated detector positioned in the IR, the emergency fan system, SF1/EF1 connected to the RHIC ACS must be operable (ASE). **Bases:** SF1 is a supply fan and EF-1 is an exhaust fan in the IR. Fans automatically start when required by the

RHIC ACS flammable-gas-detection, or the experimenter may manually start them. They rapidly exhaust the PHENIX IR volume of flammable gas to reduce fire risk.

Whenever flammable gas is in the integrated detector positioned in the IR, a minimum of 2200 ft^3 of inert purge gas must be available to dilute the detector flammable gas volumes below 25% of the Lower Explosive Limit (ASE). **Bases:** Five detectors at PHENIX have either ethane or isobutene gas. The purge gases are LN2, argon, or carbon dioxide. To reduce all five detectors to < 25% LEL takes 2000 ft^3 of inert gas. While running PHENIX, its purge gas inventory does not fall below ~33% capacity. Conservatively assuming that the inventory is at 20% of capacity, and the only available purge gas is the smallest volume argon gas, this leaves 8900 ft^3 to purge all five detectors. Thus, there is always at least four times the inventory needed to reduce the flammable gas in the detectors to < 25% LEL.

Whenever flammable gas is in the integrated detector positioned in the IR, either the detector's HSSD or the ceiling levels' HSSD system must be operational (ASE). **Bases:** An HSSD system provides a fire alarm as it senses smoke; both systems afford the same early detection capability. An HSSD is optimum for the detector because the large volume of the experimental IR has many small areas that need smoke detection. Instead of using many inexpensive, inherently low-sensitivity point-smoke detectors, the installed HSSD system consists of a single, more sensitive detector with an air sampling system to cover the required volume. The latter consists of a length or lengths of pipe pierced with strategically placed sampling holes A small fan draws air along the pipe from the sampling holes and through the detector-measuring chamber. The detector is stable, reliable and highly sensitive and is able to detect smoke at a very much earlier stage in the development of a fire; this may considerably reduce damage levels. The PHENIX-operated HSSD system senses the tight areas internal to the particle detector. The ceiling-level HSSD system is part of BNL's fire detection system. Neither HSSD alarm starts the IR's emergency exhaust fans so to prevent fresh air from feeding the fire.

Whenever flammable gas is in the integrated detector positioned in the IR and if the Ring Imaging Cherenkov Counter (RICH) detector runs with flammable gas, both the PHENIX High Capacity Ventilation System must be operational and the interstitial space between the RICH and the Pad Chamber FEE must be inerted (ASE). **Bases:** The RICH detector currently uses only carbon dioxide, which is inert gas, not a flammable one. Thus, the operability of the High Capacity Ventilation System is not required, nor must the interstitial space between the RICH and the Pad Chamber FEE be inerted. If the experiment requires this detector to use flammable gas, this requirement must be satisfied.

Whenever PHENIX powers the integrated detector electronics in the IR, one of the following three systems must be operational: The electronics racks' interlocks, the detector's HSSD system or, the ceiling-level HSSD system (ASE). **Bases:** This requirement applies at all times the detector is in the IR to reduce the chance of fire spreading from the electronics racks. Each rack has its own experimental system interlock that removes power to the rack upon detection of smoke, heat, or a water-leak inside the rack. Each of the HSSD systems provides sufficiently early alarm of a fire.

If personnel are in the IR when flammable gas is present, then both the personnel plug door and the emergency escape labyrinth must be available for their egress (ASE). **Bases:** This ensures that there are two exits from the IR and satisfies the Life Safety Code.

5.9.10.Calibration, Testing, Maintenance, and Inspections that Support Credited Controls

The C-AD must functionally test the RHIC ACS in accordance with requirements in BNL's Radiation Control Manual. **Bases:** Calibration, maintenance, and testing of Credited Controls and Supports ensure that they are in place as assumed in the SAD safety analysis. Annual testing of the access controls system is acceptable based on failure rates and reliability studies on this redundant equipment. The Radiation Controls Division Manager may grant extensions for operational reasons.

Before their running period, or each year, the C-AD must functionally test all ODH ventilation fans and air-inlet louvers signaled by the RHIC ACS (ASE). **Bases:** This testing is part of the RHIC ACS's functional test and C-AD completes it before allowing the helium refrigeration system to begin to cool down the helium below room temperature.

The C-AD must functionally test the hardware current limiting system for the main magnet power supplies before the running period (ASE). **Bases:** This ensures the operability of RHIC's main-magnet power-supplies' current-limiting hardware before each running period. The Power Supply Group communicates the findings to the Chief Electrical Engineer, the ESSHQ Division Head, the MCR Group Leader, the Maintenance Coordinator, and the ESH Coordinator.

STAR's Highly Sensitive Smoke Detection (HSSD) systems must undergo annual testing (not to exceed 15 months) (ASE). **Bases:** This timing coincides with the routine testing during summer shutdowns. The 3-month extension allows operational flexibility. The C-AD judges that this extension insignificantly increases the risk of failure of smoke detection in the IR because the ceiling HSSD system is redundant and separately tested. The C-AD completes the testing before each running period.

STAR's Flammable Gas Detection System must undergo annual testing (not to exceed 15 months) (ASE). **Bases:** This timing corresponds with routine testing during summer shutdowns. The 3-month extension allows operational flexibility. The C-AD deems the 3-month extension insignificantly increases the risk of failure of smoke detection in the IR because the RHIC's ACS flammable-gas detection system is redundant and separately tested. The C-AD completes the testing before each running period.

STAR emergency exhaust fans must undergo annual testing (not to exceed 15 months) (ASE). **Bases:** This coincides with routine testing during summer shutdowns. The 3-month extension interval affords operational flexibility. The C-AD judges the 3-month extension insignificantly increases the risk of failure of smoke detection, as the IR purge-failure emergency exhaust system is redundant and separately tested. The C-AD completes the testing before each running period.

PHENIX Highly Sensitive Smoke Detection (HSSD) systems must undergo annual testing (not to exceed 15 months) (ASE). **Bases:** This coincides with routine testing during summer shutdowns. The 3-month extension interval supports operational flexibility. The C-AD judges the 3-month extension does not significantly increase the risk of failure of smoke detection in the IR because the ceiling HSSD system is redundant, and separately tested. The C-AD completes the testing before each running period.

PHENIX Flammable Gas Detection System must undergo annual testing (not to exceed 15 months) (ASE). **Bases:** This coincides with the routine testing during summer shutdowns. The 3-month extension interval allows for operational flexibility, and the C-AD judges that it insignificantly increases the risk of smoke-detection failure in the IR because the RHIC ACS

flammable-gas detection system is redundant and separately tested. The C-AD completes the testing before each running period.

PHENIX emergency exhaust-fans must undergo annual testing (not to exceed 15 months) (ASE). **Bases:** This coincides with routine testing during summer shutdowns. The 3-month extension interval allows for operational flexibility. C-AD judges the extension interval of 3-months insignificantly increases the risk of smoke detection failure in the IR because the purge emergency exhaust system is redundant and separately tested. C-AD completes the testing before each running period.

PHENIX High Capacity Ventilation System must undergo annual testing (not to exceed 15 months) (ASE). **Bases:** This coincides with routine testing during summer shutdowns. The 3-month extension allows operational flexibility. C-AD does not significantly increase the risk of IR ventilation failure. The C-AD completes the testing before each running period.

Interlocks for PHENIX's electronics-racks in the IR must undergo annual testing (not to exceed 15 months) (ASE). **Bases:** This coincides with routine testing during summer shutdowns, with the 3-month extension offering operational flexibility. The C-AD judges the 3-month interval insignificantly increases the risk of failures of these interlocks. The C-AD finalizes testing before each running period.

Area radiation monitors must undergo annual calibration (not to exceed 15 months) (ASE). **Bases:** the C-AD bases the calibration frequency of radiation-monitors on experience and engineering judgment. The C-AD annually calibrates the radiation monitors used to interlock the accelerator beam off in the event of unexpectedly high-levels of radiation. The C-AD bases the 3-month extension on the mean time to failure (MTTF). While the extension provides for operational flexibility for scheduling and undertaking the calibration, there is no routine reliance on it. The Chair of C-AD's Radiation Safety Committee and BNL's Radiation Control Division Manager approve extensions. The observed out-of-calibration rate for C-AD area radiation monitors is about 5×10^{-3} per monitor per year. Assuming a constant failure rate, then, according to the C-AD, increasing the interval from 12- to 15-months would increase the out-of-calibration rate to ~6.2×10^{-3} per monitor per year. Because potential fault doses between 20 mrem and ~100 mrem are of extremely low consequence and because the radiation-monitor failure rate would only increase from 5×10^{-3} to ~6.2×10^{-3} between calibrations, the consequence category and frequency range of this failure has not increased. Thus, this extension is acceptable risk of accidental exposure (an MTTF once in ~160 years versus once in 200 years).

Radiological shielding and barriers (e.g., berms, shield blocks, and fencing) must undergo visual inspection before operations to ensure that they are in place and functional (ASE). **Bases:** This interval coincides with the annual running period at the C-AD accelerators, and actually is part of the facility startup. The C-AD uses procedures, and documents shielding and barrier configuration using a Radiation Safety Checklist for each accelerator and accelerator facility. Once operating, periodic radiation-dose-rate surveys ensure radiation barriers remain in place and are effective. Additionally, C-AD uses an annual environmental TLD program to demonstrate the effectiveness of the shielding and shielding controls.

Rainwater barriers for activated soil must undergo an annual visual inspection to ensure that they are in place and functional (ASE). **Bases:** Experience demonstrated that annual inspections are adequate to uncover problems with impermeable caps. The C-AD has not experienced any significant cap failures resulting in allowing groundwater contamination over

the 10 years since this program started. This inspection interval also coincides with the C-AD's inspections of facilities during the annual shutdown of the accelerators before operations begin.

5.9.11.Administrative Controls

While not treated as Credited Controls or Supports, the administrative controls in this section of the RHIC ASE provide defense-in-depth to help ensure the operational integrity of all controls during operations. For RHIC, these administrative controls are

- Minimum Main Control Room (MCR) and Experimental Area Staffing
    - One qualified Operations Coordinator and one qualified operator must be on duty in MCR when beam is operating. During normal operations, one of the two must remain in the MCR at all times (ASE). **Bases:** The requirement that the MCR is occupied by a qualified person during beam operations ensures that personnel are monitoring system operations, that operations remain in compliance with the ASE and operating procedure requirements, and that operators can respond in a timely manner to off-normal conditions and emergencies. Once the C-AD allows beam transport to other accelerators, i.e., the Booster and beyond, it is prudent to have an Operations Coordinator on duty to coordinate the operations of the entire C-AD facility. Authorized Alternative: If one operator is incapacitated, the remaining operator may continue RHIC operations as long as the C-AD restores personnel requirements within two hours (ASE). **Bases:** Allowing time to replace an incapacitated operator, allows operations to continue at the discretion of the remaining operator. The C-AD bases these shift-operating requirements on experience and engineering judgment. A single operator can stop beam operations should conditions arise that overly burden him or her.
    - The minimum experimental area staffing must be a Collider-Accelerator Support (CAS) watch person for any RHIC operations with beam (ASE). **Bases:** This requirement assures that there are shift personal to respond to problems in the field outside the MCR. C-AD bases this requirement on experience with many experiments conducted throughout BNL's history with large accelerators. The on-duty CAS watch communicates by radio with the MCR, and the C-AD forwards alarms to the CAS radio. Normally a CAS watch continuously makes rounds of all C-AD facilities.
- Cryogenic Control Room Staffing
    - Cryogenic Control Room: One Cryogenic Shift Supervisor or designee and one qualified Cryogenic Operator must be on watch when the refrigerator operating. One of the two must remain in the Cryogenic Control Room at all times unless the controls in the Cryogenic Control Room relocate to the MCR or unless emergency conditions require actions by all cryogenic-watch standers (ASE). **Bases:** This requirement assures that there are shift personnel to respond to routine problems in the field while one operator normally stays in the Cryogenics Control Room. The C-AD allows an exception when more field operations may be required in an emergency. The C-AD bases this requirement on experience throughout the history of many large accelerators at BNL and experience with the RHIC cryogenic system over the last 10 years.

- Authorized Alternative: If one operator is incapacitated, the remaining operator may continue Collider operations as long as the C-AD meets the operator-staffing requirement within two hours (ASE). **Bases:** Allowing time to replace an incapacitated operator allows operations to continue at the discretion of the remaining operator. The C-AD bases these shift-operating requirements on experience and engineering judgment. A single operator can stop beam operations should conditions arise that overly burden him or her.

- STAR and PHENIX Staffing
  - Watch: A qualified local watch is required when flammable gas is in the PHENIX detector in the IR (ASE). **Bases:** This requirement assures a qualified person is at PHENIX to monitor the safety of the flammable gas system, and to respond to off-normal or emergency conditions.
  - Watch: A qualified local watch is required when flammable gas is in the STAR detector in the IR (ASE). **Bases:** This requirement assures a qualified person at STAR to monitor the safety of the flammable gas system, and to respond to off-normal or emergency conditions.
  - PHENIX Experimental Area: One Experiment Shift Leader is required for experimental operations with beam (ASE). **Bases:** This requirement assures that a qualified person takes charge of all PHENIX equipment when beam is on, coordinates all PHENIX operations, and communicates with the MCR.
  - STAR Experimental Area: One Experiment Shift Leader is required for experimental operations with beam (ASE). **Bases:** This requirement assures a qualified person takes charge of all STAR equipment when beam is on, coordinates all STAR operations, and communicates with the MCR.
- Collider and Experiment Modification and Control
  - C-AD must use approved configuration control procedures to ensure the review of modifications against Credited Controls in the ASE (ASE). **Bases:** This assures that C-AD has a system to review all modifications that potentially could violate the assumptions in the SAD safety analysis, or the ASE requirements.
  - The C-AD must review each Collider experiment for configuration control and safety before running it with beam (ASE). **Bases:** This ensures that C-AD adequately reviews experimental installations and modification before starting operations with beam. These reviews are part of the configuration-management program that ensures that these changes do not involve USIs, and do not violate the ASE requirements.
  - An experiment may lie dormant for longer than one year between runs and not require a review during this dormancy period. For experiments that may run more than once within a 12-month period, a review must occur before each single scheduled run, as determined by the C-AD management (ASE). **Bases:** The annual- or before resumption- operation reviews after an extended shut down ensures that Credited Controls and Supports are operational and that no unapproved modifications were made. If the interval between runs is short with no experiment changes, the C-AD's management may waive the pre-run review.
  - During shutdown periods, when the MCR is not operating, the C-AD must review specific safety requirements for experiments on a case-by-case basis. The C-AD's Experimental Safety Review Committee (ESRC) must perform the review and the C-

AD Chair must approve the experiment (ASE). **Bases:** This ensures there is an adequate review and approval given to experimental configurations that may be unique, depending upon the proposed type of work or testing. This verifies that the intended activity/configuration is safe. Because there are multiple activities and configurations that may occur during shutdown, specific cases are proposed to the C-AD's ESRC Chair and reviewed/approved at an adequate level with sufficient depth to ensure safety.

- The C-AD must document, via the Unreviewed Safety Issue Determination (USID) process, modifications to RHIC and experiments that are determined to increase the frequency or consequences of known hazards, or which introduce new ones. If C-AD identifies a positive USID, the C-AD must not implement the modification without the DOE's approval (ASE). **Bases:** This ensures that the C-AD adequately reviews a modification before initial operations. These reviews are part of the configuration-management program that ensures changes do not involve USIs and do not violate ASE requirements. Further, it assures that no changes occur that could potentially violate the assumptions in the safety analysis. The USID process would document their impacts, and C-AD would obtain the DOE's approval of any required change to the ASE before the changes are affected.

- Beam-loss-induced radiation within uncontrolled areas for credible repeated losses must be less than 100 mrem in a year (ASE). **Bases:** This makes certain that the C-AD does not exceed the DOE's limit of 100 mrem per year to an untrained person, thereby s satisfying the requirements in DOE Order 458.1, Radiation Protection of the Public and the Environment.
- The C-AD must manually test accessible ODH fans and air-inlet louvers semiannually (not to exceed 8 months) (ASE). **Bases:** This test entails manually starting each accessible ODH fan during a maintenance day in the middle of the annual experimental run to ensure that there are no mechanical problems with the fans.
- ODH area classification must comply with the requirements in BNL's SBMS Subject Area, ODH Classification/Controls (ASE). **Bases:** This ensures that the C-AD analyzes and controls oxygen-deficiency hazards in accord with the BNL Subject Area, Oxygen Deficiency Hazards.

5.10. The Bases for Credited Controls for operating the TVDG and TtB

5.10.1. Credited Controls for Maximum Credible Incidents - ASE Limits

The maximum beam current and energy in the TtB is 200 nA DC of 18 MeV deuterons or equivalent (ASE). **Bases:** This limit ensures that C-AD does not have to post the TtB berm for radiation protection, and maintains the dose at that area ALARA. With a minimum of 3 feet of soil shielding over the TtB line, the annual dose to an individual would be well below 25 mrem in a year with a 200 nA beam of 9 MeV/u deuterons hitting an iron target.

The maximum beam current and energy in the TVDG is 4 μA DC, and 30 MeV/u deuterons or equivalent (ASE). **Bases:** The TVDG has a complex, varied capability for producing radiation depending upon the type of ion accelerated. The energies of the accelerated ions are proportional to the charge state achieved by the ions when they undergo stripping within the accelerator tank. Because the TVDG system strips the electrons on light ions to positive

charge-states comparable to their atomic numbers, they achieve a relatively high energy-per-nucleon, and thus, can produce appreciable numbers of fast neutrons and gamma rays when they strike any material. The TVDG system cannot strip heavier ions to charge states comparable to their atomic numbers, and can only attain a relatively low energy-per-nucleon. Such particles do not readily produce nuclear reactions when they strike materials, and so do not produce an appreciable secondary radiation field. The C-AD studied the TVDG radiological controls (interlocks, shielding, fencing, and area postings) for deuteron beams, determining that the radiological controls are adequate to maintain exposures ALARA, and well below the radiation-worker limits. For other ions, the radiological controls provide equivalent or greater protection compared to the maximum deuteron-beam power of 120 watts. The C-AD cannot operate TVDG beyond these Credited Controls without changing its structures, systems, and components (SSCs); doing so requires the C-AD management's authorization.

5.10.2.Credited Controls for Radiation Hazards Due to Access

During operations with beam, an access controls system (ACS) must prevent access to accelerator enclosures (ASE). **Bases:** The ACS is the Credited Control for accelerator enclosures and it prohibits access to the beam; if access is forced, the ACS removes beam. The C-AD uses configuration management to document the design and modification of the ACS. The C-AD Radiation Safety Committee must approve changes that may affect the reliability of the system's safety function.

5.10.3.Credited Controls for Oxygen-Deficiency Hazard

Engineered systems (interlocks and alarms) must be in place to minimize the likelihood of injury/illness from a release of inert gas (ASE). **Bases:** The TVDG's MP Tanks use an inert insulating gas mixture of approximately 45% sulfur hexafluoride, 45% nitrogen, and 10% carbon dioxide with a specific gravity of 2.85 compared to air. This gas supports a higher tank accelerating voltage to inject a higher energy beam into the TtB line. The TVDG's Accelerator Room and Pit, Electrical Equipment Room, Building Basement, Mechanical Equipment Room, and the TtB Tunnel might experience oxygen deficiency if a gas-pressure boundary fails. The C-AD uses engineered controls to protect occupants from oxygen deficiency.

5.10.4.Credited Control Supports to Protect Against Radiation

Before beam operations, all shielding of the accelerator and the beam-line enclosures (berms, shield blocks, and barriers) must properly be in place and configuration-controlled (ASE). **Bases:** The Radiation Safety Checklist is the method used to verify that all shielding assumed in the safety analysis is in place before beam operations begin, thereby ensuring that no excessive radiation exposures occur.

During beam operations of an accelerator, the associated ACS must be functional; this requires the full functionality of those portions of the ACS that prevent exposure to beam radiation inside the enclosures, and remove the beam when excessive beam or beam loss occurs (ASE). **Bases:** The ACS for the TVDG and TtB ensures no exposure to excessive radiation, regardless of the specific ion species in use. The C-AD uses configuration management to design

and modify the ACS. The C-AD Radiation Safety Committee must approve changes that may affect the reliability of the system's safety function.

During beam operations, the area radiation monitors interfaced with the TVDG and TtB ACS, and which remove the beam when there is excessive beam loss, must be within their calibration date (ASE). **Bases:** The operability and placement of radiation monitors interfaced with the ACS ensures that no exposure to excessive radiation from routine beam loss and beam faults occurs. The C-AD does not consider a radiation monitor as operable unless it has a current calibration.

During beam operations, the locations of area radiation monitors interfaced with the ACS must be configuration-controlled (ASE). **Bases:** Configuration control of the ACS radiation monitors makes certain they are properly located so that the sensed dose-rate provides the Control Room operations staff with accurate alarms. Each ACS radiation-monitor has a built-in keep-alive source that enables the ACS to continuously sense and react whenever a monitor disconnects or fails. When the C-AD replaces or adds radiation monitors, the RCTs test them individually using an independent radioactive source to verify that the monitor sends it output signals to the correct readout location.

During operations with the beam, BNL's quarterly environmental TLDs near TVDG and BNL's monthly personnel monitoring TLDs at the TVDG Control Room and Target Rooms must be in place to monitor radiation levels (ASE). **Bases:** The C-AD confirms the appropriateness of the limit for the number and kinetic energy of deuterons, or equivalent for other ions, by reviewing the environmental and area-wide TLD measurements. The C-AD uses these results to endorse the uncontrolled areas on the TtB berm and selected areas in the TVDG Control Room, Target Rooms, and hallways, and to comply with the radiological postings.

5.10.5.Credited Control Supports to Protect Against an ODH

C-AD must ensure the operability of installed oxygen monitors used to alert against the displacement of oxygen by the leakage of insulating gas leaking into potentially occupied areas; must ensure they alarm at oxygen levels below 19.5% (nominal), and must ensure the operability of the automatic ODH Emergency Purge Fan (ASE). **Bases:** The C-AD analyzed oxygen deficiency for the TVDG and TtB, and consequently added controls to reduce the ODH hazards. These included automating the ODH Emergency Purge Fan based on sensing a low oxygen concentration, modifying the ODH Emergency Purge Fan to improve the flow rate of the heavy, inert purge gas, and routing the relief valves in the Mechanical Equipment Room outside it. The C-AD reviewed the following areas to determine the appropriate ODH controls: Accelerator Room and Pit, Electrical Equipment Room, Building Basement, Mechanical Equipment Room, TtB Tunnel, Target Rooms, and the Remote Gas Storage Area. Because hazardous inert gas is heavier than air, then, rather than using BNL's SBMS ODH model of homogenous mixing, the C-AD's calculation appropriately considered the fact that a gas release accumulates in the lower areas of the building.

Authorized Alternatives: The Tandem Supervisor or ESH Coordinator can approve the use of personnel oxygen monitors for each person in a posted ODH area while the installed monitors are out- of-service. If the ODH Emergency Purge Fan is not operable, the following are applicable:

- The Accelerator Room and pit, Electrical Equipment Room, Building Basement, Mechanical Equipment Room, and the TtB Tunnel must be emptied of all unnecessary personnel as soon as practicable.
- During the period that the ODH Emergency Purge Fan is not operable, the Accelerator Room and Pit, Electrical Equipment Room, Building Basement and the TtB Tunnel may be entered provided as each entrant has a 5-minute escape pack (or self-contained breathing apparatus), and a portable oxygen monitor (POM).
- During the period that the ODH Emergency Purge Fan is not operable, gas-transfer operations in the Mechanical Equipment (ME) room may occur for up to 72 hours provided that
    - Each operator in the ME room has a 5-minute escape pack (or self-contained breathing apparatus), and a portable oxygen monitor (POM)
    - An unexposed observer outside the mechanical equipment (ME) room, with no other duties, is responsible for maintaining continuous contact (either visual or aural) with all ME room entrants, and for summoning the BNL Fire/Rescue Group, if needed.

Bases: The ODH analysis showed that only the Accelerator Room and Pit, Electrical Equipment Room, Building Basement, Mechanical Equipment Room, and TtB Tunnel were potential ODH areas. The required PPE and controls depend on whether or not the ODH Emergency Purge Fan is operable, and if gas-transfer operations are in progress in the Mechanical Equipment Room. The Authorized Alternatives detail the increased required controls when the ODH Emergency Exhaust Fan fails. Removing unnecessary personnel reduces the risk of injury or death. While the C-AD will remove personnel, and restore the ODH Emergency Purge Fan as soon as practicable, a portable oxygen monitor (POM) and a 5-minute escape pack (or self-contained breathing apparatus) is just as effective as the installed monitor and alarm system and Emergency Purge Fan. Thus, having each individual use this PPE when entering the posted ODH area has no effect on their risk of exposure to oxygen deficiency. The TVDG Supervisor is responsible for restoring the installed system to operation. The C-AD judged the 72-hour limit on conducting gas-transfer operations insignificantly increases risk because of the use of PPE and the presence of a safety observer during this activity. The 72 hours suffices for a complete cycle of repair to a Tandem MP tank internals, and allows for continued facility operations, especially if the TVDG is supplying both the RHIC and NSRL facilities with ions.

5.10.6.Calibration, Testing, Maintenance, and Inspections that Support Credited Controls

The C-AD must functionally test the Access Controls System (ACS) in accordance with requirements in the BNL Radiological Control Manual (ASE). **Bases:** The BNL Radiological Control Manual requires annual testing of the access controls system, including a functional check of the interlocking area-radiation monitors; demonstrably this is acceptable, based on failure rates and reliability studies of this redundant equipment. The Radiation Controls Division Manager may grant extensions for operational reasons.

Area radiation monitors must undergo annual calibration (not to exceed 15 months) (ASE). **Bases:** The C-AD bases the frequency of radiation-monitor calibration on experience and engineering judgment. The C-AD annually calibrates the radiation monitors used to interlock the accelerator beam off in the event of unexpectedly high-levels of radiation. The C-AD bases the 3-month extension on the mean time to failure (MTTF) to allow operational flexibility for

scheduling and undertaking the calibration. The C-AD does not rely routinely on the extension. The C-AD Radiation Safety Committee Chair and BNL's Radiation Control Division Manager approve extensions.

The TVDG ODH Emergency Purge Fan must undergo annual testing (not to exceed 15 months) (ASE). **Bases:** The annual test ensures the operability of the ODH Emergency Purge Fan. The C-AD bases the 3-month extension on experience and engineering judgment. Failures of this fan are rare. The extension provides for operational flexibility for scheduling and performing the annual test, an extension is rare and C-AD does not use it routinely. The Authorized Alternative, i.e., use of POM and 5-minute escape pack (or self-contained breathing apparatus) provides the same level of protection if the installed fan fails.

The installed oxygen monitors that start the ODH Emergency Purge Fan or provide a local alarm must undergo annual testing (not to exceed 15 months) (ASE). **Bases:** The C-AD used experience and engineering judgment in setting the calibration frequency of the installed oxygen-monitors' calibration, and the 3-month extension that affords operational flexibility in scheduling and testing. No failure records are maintained for these sensors; thus, the C-AD did not quantify the increase in failure during the 3-month extension. The C-AD does not routinely use the extension. The Authorized Alternative; i.e., using POM, provides the same level of protection if the installed system fails; thus, there are no adverse safety effects by employing it.

Radiological shielding and barriers (berms, shield blocks, fencing) must undergo annual visual inspection to ensure that they are in place and functional (ASE). **Bases:** This interval coincides with the annual running period at the C-AD's accelerators. This inspection is part of the facility startup. The C-AD proceduralized the inspection, and operators document it via the Radiation Safety Checklist for each facility. Once operating, periodic radiation dose-rate surveys ensure that the radiation barriers remain in place and are effective. Additionally, the annual environmental TLD program verifies the effectiveness of the shielding and shielding controls. The C-AD bases the 3-month extension on experience and engineering judgment; it provides for operational flexibility for scheduling and performing the inspection. The C-AD does not rely on the extension as routine.

5.10.7.Administrative Controls

While not treated the same as Credited Controls or Supports, administrative controls in this section provide defense-in-depth to help ensure the operational integrity of the Credited Controls during operations. These administrative controls are

- Minimum Main Control Room (MCR), TVDG Control Room, and Experimental Area Staffing Controls
    - C-A MCR: One qualified Operations Coordinator and one qualified operator must be on duty when TtB beam is injecting into the Booster. During normal operations, one of the two operators must remain in the Main Control Room at all times (ASE). **Bases:** The expectation that the MCR be operating during beam operations when the TVDG transports ions to the Booster ensures that staff are monitoring system operations, and that operations comply with the ASE and the requirements of the C-AD operating procedures. Additionally, operators can respond promptly to off-normal conditions and emergencies.

- Authorized Alternative: If one operator is incapacitated, the remaining operator may continue operations as long as the C-AD meets the operations staffing requirements within two hours (ASE). **Bases:** Allowing time to replace an incapacitated operator, allows operations to continue at the discretion of the remaining operator. The C-AD bases these shift staffing requirements on experience and engineering judgment. It is easy to stop beam operations should conditions arise that burden the remaining operator.
- TVDG Control Room: Two qualified individuals are required to operate the MP6 and/or MP7 Tandem accelerators. The Operator-in-Charge must be fully qualified and must be on-duty at the TVDG facility. The second operator is a person judged by the C-AD Pre-Injector Group Leader and TVDG Operations Supervisor, or in their absence, the TVDG Operations Shift Supervisor, to have sufficient knowledge to assist the Operator-in Charge. The second operator must be on-duty at the C-AD complex, and must have radio communication with the Operator-in-Charge on-duty at the TVDG (ASE). **Bases:** The TVDG can be operated locally by qualified individuals as long as the beam is not injected into the Booster where it can be transported to AGS, and then to RHIC or NSRL. TVDG operations are simple enough that two operators can safely control the ion beam down to the end of TtB line before its injection into Booster. Once operators allow the beam to other accelerators, the C-AD has determined that it is prudent to have an Operations Coordinator on duty to coordinate the operations of the entire C-AD facility.
- Authorized Alternative: If the second operator is incapacitated, the Operator-in-Charge may continue Tandem operations as long as TVDG restores operator requirements within two hours (ASE). **Bases:** Allowing time to replace an incapacitated operator, ensures that operations to continue at the discretion of the remaining operator. The C-AD bases these shift staffing requirements on experience and engineering judgment. A single operator can stop beam operations should conditions arise that overly burden the remaining operator.
- The minimum experimental area staffing for local TVDG experiments with beam must be a qualified TVDG operator (ASE). **Bases:** This requirement assures that there are shift persons to respond to problems in the field outside the TVDG Control Room. C-AD bases this requirement on experience with many experiments conducted throughout BNL's history of large accelerators.
- The minimum experimental area staffing for TVDG injection into Booster must be a Collider-Accelerator Support (CAS) Watch (ASE). **Bases:** This requirement assures that there are shift personnel to respond to problems in the field outside the MCR when TVDG ions inject into the Booster and beyond. The C-AD bases this requirement on experience with many accelerators conducted throughout the history of large accelerators at BNL. The on-duty CAS watch communicates by radio with the MCR and the C-AD forwards alarms to the CAS radio. Normally, a CAS watch continuously makes rounds of all C-AD facilities.

- TVDG, TtB and Experiment Modification and Controls
  - Approved configuration control procedures must ensure the review of modifications against Credited Controls in the ASE (ASE). **Bases:** This ensures that C-AD has a

system to review all modifications that potentially could violate the assumptions in the SAD safety analysis, or the ASE requirements.

- The C-AD must review the configuration control and safety of each experiment in the TVDG Target Rooms before running with beam. An experiment may lie dormant for more than a one year between runs, and not require a review during this time. For experiments that may run more than once within 12-months a review must occur before each singular scheduled run (ASE). **Bases:** This ensures that C-AD adequately reviews experimental installations and modifications before initial operations. These reviews are part of the configuration-management program ascertaining that these changes do not involve USIs and do not violate ASE requirements. The annual or before-resumption of operation reviews after an extended shutdown also ensures that Credited Controls and Supports are operational and that C-AD reviewed all modifications.
- If C-AD determines modifications to the TVDG or TtB or Target Room Experiments increase the frequency or consequences of known hazards or introduce new ones, then C-AD must document them via the Unreviewed Safety Issue Determination (USID) process. If a positive USID exists, C-AD must not implement the modification without the DOE's approval (ASE). **Bases:** This ensures that C-AD adequately considers the modification before initial operations. These reviews are part of the configuration-management program ensuring that these changes do not involve USIs and do not violate ASE requirements. Additionally, this makes certain that no changes occur that might violate the assumptions in the SAD safety analysis or the ASE requirements. The USID process documents the impacts of such changes and helps ensure the DOE's approval of a change to the ASE, should it be required, before the changes are in effect.

- Beam- loss-induced radiation within uncontrolled areas for credible repeated losses must be less than 100 mrem in a year. The C-AD shall use BNL's environmental TLD monitors to check the effectiveness of their radiation control program (ASE). **Bases:** This ensures that C-AD does not exceed the DOE's limit of 100 mrem per year to a non-radiation worker, so satisfying the requirements in DOE Order 458.1, Radiation Protection of the Public and the Environment.
- ODH area classification must comply with the requirements in BNL's SBMS Subject Area, ODH Classification/Controls (ASE). **Bases:** This ensures that the C-AD controls oxygen-deficiency hazards according to BNL Subject Area, Oxygen Deficiency Hazards.

5.11. The Bases for Credited Controls for the BLIP- and RRPL-Operations

5.11.1. Credited Controls for Maximum Credible Incidents - ASE Limits

The C-AD cannot exceed the maximum credible beam power of accelerators without changing the structures, systems, and components (SSC), a process that requires authorization by the C-AD management (ASE). **Bases:** The maximum credible beam power is associated with the Credited Controls for radiation hazards.

The Linac sends beam to the BLIP targets. The C-AD gives the basis for the Linac limit in Section 5.7.1, which is 5.6 x 10^{18} GeV in one hour (250 μA). The C-AD does not operate the

BLIP near the Linac's intensity limit, and does not normally post the road outside the BLIP for radiological safety. However, should the C-AD need to increase the beam to BLIP to the Linac's limit, then the C-AD would place appropriate postings along the road to warn personnel about dose rates there, in surrounding areas, and inside the BLIP Building 931.

5.11.2.Credited Controls for Radiation Hazards Due to Emissions

During BLIP beam operations, the C-AD continuously monitors for radioactive airborne emissions (e.g., particulates, tritium and short-lived gaseous activity) anticipated to exceed 0.1 mrem per year to the Maximally Exposed Individual (MEI) (ASE). **Bases:** C-AD continuously monitors BLIP exhaust. It prevents a long operating run from potentially violating 10CFR61 Subpart H.

Authorized Alternative: The C-AD allows unavoidable interruptions of emissions monitoring for up to 10 days as long as the C-AD can use records of integrated beam current obtained from BLIP or Linac, in units of micro-amp hours, to estimate the airborne emissions during this time. The C-AD must take actions to restore to operation the installed continuous monitoring system as soon as practicable (ASE). **Bases:** The radioactive emissions from the BLIP stack are directly proportional to the integrated proton beam to BLIP. The C-AD can use instrumentation at the BLIP or Linac to determine the beam current to the former. Although this alternate method is equivalent to using the stack monitor, the C-AD imposes a 10-day limit on its use to ensure that operations managers assign high priority to repairing a stack monitor.

During beam operations, C-AD requires an operable BLIP-tank hotbox exhaust-ventilation system (ASE). **Bases:** This configuration ensures that BLIP operations do not release radioactive particulates and gases into the occupied BLIP building. It also prevents a ground-level release of the activated exhaust air, and prevents contamination of and internal dose to workers.

TPL Hot Cells, Hot Boxes Radioactive Fume Hoods and their associated ductwork must have negative pressure between these facilities and the room and outdoors to allow target and radioactive materials processing operations (ASE). **Bases:** This configuration ensures that TPL operations do not release radioactive particulates and gases into the occupied TPL, and prevents contamination of and internal dose to workers.

5.11.3.Credited Control Supports to Protect Against Radiation Due to Access

During beam operations, operators must maintain the BLIP tank hotbox doors 1 and 2 locked at all times (ASE). **Bases:** The BLIP hotbox has two locks, a lock owned by the BLIP Operator and one by the BLIP Radiological Controls Group. This ensures that no one can enter the hot box without proper work planning to consider dose and contamination control.

5.11.4.Credited Control Supports to Protect Against Radiation

The Radiation Safety Committee must review proposed significant changes to the Linac beam's characteristics transported to BLIP for effect on safety and for ASE compliance before the change (ASE). **Bases:** This control ensures that the BLIP does not generate excessive airborne radioactivity to cause nuisance dose-rates in the BNL-site areas surrounding the BLIP

stack resulting from effluent down wash. The RSC review also helps minimize the chances of target failure.

The C-AD must ensure that the RRPL shielding (fixed - lead, sand, steel, polyethylene, and moveable - concrete, water, steel) is in place and configuration-controlled (ASE). **Bases:** The C-AD uses procedures to initiate and document the visual verification that all shielding protecting staff from excessive radiation is in place before starting beam operations, so ensuring that no excessive radiation exposures can occur. At Building 801, procedures control the configuration of the RRPL shielding.

The C-AD must ascertain that during beam operations and when irradiated targets are in the hot box, the BLIP shielding (fixed - lead, sand, steel, polyethylene, and moveable - concrete, water, and steel) is in place, and configuration-controlled (ASE). **Bases:** The C-AD uses the completed Radiation Safety Checklist before authorizing operations with beam each year. The checklist documents the visual verification that all shielding assumed in the safety analysis is in place before beam operations start. This ensures that no excessive radiation exposures can occur.

Prior to BLIP beam operations, the C-AD must ensure operable interlocks for the Linac bending magnets, BM1 and BM2, remove the beam when required. Operable means that the C-AD has a calibrated area-radiation monitor interlock, and that each inspection plug limit-switch and at least one of the two BLIP water-level indicators will turn off BM1 and BM2 to remove the beam from Linac to the BLIP. The following must be operable and interlocked: Area radiation monitor 1A, BLIP water-tank-level indicators LLC1 and LLC2, and Inspection plug limit switches IPP1 and IPP2 (ASE). **Bases:** The radiation-safety interlocks remove beam on high room-radiation, low BLIP-tank water level, and if either of the inspection plugs are not fully in position. This ensures the removal of the radiation source causing the radiation-safety problem because the bending magnets that send Linac beam into BLIP-tank turn off. The Radiological Control Division calibrates the radiation detector annually. The BLIP's water-tank-level probes sense a low water level, and initiate their safety function when either probe is dry, viz., about 1 to 1-1/2 feet below normal water level, and well before there is any significant increase in the room's dose-rate. Opening either of the two inspection plugs can increase dose rates. These systems are part of the credited interlock system that removes the beam from the BLIP. Additional defense-in-depth interlocks, such as the Fast Beam Interrupt (FBI) system, protect the machine and help reduce the possibility of high dose-rates in the BLIP room.

The low airflow alarm at BLIP's exhaust ventilation system must be operable to provide an alarm to ensure negative pressure conditions in the BLIP's hot cell (ASE). **Bases:** Negative pressure into the hot cell ensures dispersible radioactive contamination and airborne radioactivity stay within it.

If the C-AD anticipates that BLIP emissions exceed 0.2 mrem per year to the Maximally Exposed Individual (MEI), then they must take actions to ensure operations comply with NESHAP's requirements, including permitting (ASE). **Bases:** The C-AD currently has no stack air-emissions in any areas, with the exception of BLIP, that exceed an MEI of 0.1 mrem/y. Due to improvements in the BLIP stack in 2010, BLIP emissions were permitted by EPA up to 10 mrem per year to the MEI. The ASE ensures that C-AD maintains the actions taken in 2010 to continue to comply with 10CFR61 Subpart H when above 0.2 mrem per year at BLIP.

If the C-AD calculates that the annual activity concentration of sodium-22 in the leachate exceeds 25%, or tritium in the leachate exceed 5% of the Drinking Water Standard, then the C-AD must place a cap over the soil area to protect the groundwater unless BNL's Management

waives the requirement (ASE). **Bases:** This satisfies BNL's Design Practice for Known Beam Loss Locations, and the permanent BNL Waiver 2010-4, and maintains ALARA the potential groundwater contamination caused by activated soil leachate. If the C-AD requires a waiver, then it must be justified to BNL management who must approve it before allowing the change. The major consequence of contaminating groundwater is a loss of credibility with regulators and the public should a major incident occur. In all cases, there is no possibility of anyone ever drinking contaminated water. There are no on-site drinking-water wells in the path of C-AD groundwater plumes. It would take over 20 years for contaminated groundwater to travel beyond BNL's site boundary, which allows time for remediation should a plume be created.

Authorized Alternative: If the C-AD discovers an installed cap to be breached, alternative equivalent protection approved by their management, must be in place within 10 days of the discovery. The C-AD must initiate permanent repair to the cap as soon as practicable (ASE). **Bases:** See Authorized Alternative in Section 5.7.4.

During Target Processing Operations, at least two of the three Building 801 Building Exhaust Fans (BEF-1, BEF-2 and BEF-3) must be operating (ASE). **Bases:** This ensures the maintenance of the known configuration of building exhaust fans to ensure that the exhaust-ventilation-system's ducts and the fume hoods and hot cells/hot boxes are held at a pressure lower than the TPL room. This configuration ensures workers do not become contaminated or receive an internal dose. Future testing may show one fan alone is sufficient to continue safe operations.

During work involving radioactive material in the fume hoods or hot boxes/hot cell within the TPL both exhaust fans, EF-1 and EF-2, must be operating for work in the hot boxes/hot cell (ASE). **Bases:** The two operating exhaust fans ensure that the hot boxes/hot cell maintain a lower pressure than the TPL room, so assuring that workers do not become contaminated or receive an internal dose. Exhaust fans EF-1 and EF-2 are variable speed fans in the B801 filter room that maintain a negative pressure in the exhaust duct from the hot cell/hot boxes. They sense the differential pressure in the duct, and vary their speed to maintain the negative pressure at about the same value.

One exhaust fan (EF-5, EF-6, EF-7 or EF-8) for the fume hood in TPL must be operating (ASE). **Bases:** The operating exhaust fan ensures that the fume hood maintains a lower pressure than the TPL room, so that workers do not become contaminated or receive an internal dose

Authorized Alternatives: Upon discovering that both EF-1 and EF-2 have failed, stop work involving radioactive materials in the hot box/hot cells. Upon finding that only one exhaust fan, EF-1 or EF-2, is operational, impose the following restrictions while work involving radioactive materials continues in the fume hoods, hot box/hot cells:

- Opening a hotbox door is allowed under approved operating procedures, which include the requirement that the hot box/hot cell auxiliary exhaust blower is on
- Normal use of the hotbox portals in the fume hood is allowed provided that one fume hood's fan (EF-5, EF-6, EF-7 or EF-8) is functioning
- Opening of the hot box/hot cell doors or clamshell portal is allowed if undertaken with approved work planning and the TPL Supervisor's approval

Bases: If both of fans EF-1 and EF-2 are off, then the ventilation system can no longer assure a safe negative pressure in the exhaust line and the hot cell/hot boxes. The new Building Exhaust Fans BEF-1, BEF-2 and BEF-3 may be sufficient to continue work safely, but until this configuration is tested, the C-AD assumes that the Building Exhaust Fans alone have insufficient

capacity to allow the safe continuation of work. The Authorized Alternatives provide safe conditions to continue work with radioactive material in the fume hoods or hot boxes/hot cell within the TPL. Experience shows a single fan, EF-1 or EF-2, maintains safe negative pressure. The fume hood normally is exhausted by one of four possible exhaust fans in the B801 filter room (EF-5, EF-6, EF-7 or EF-8). The C-AD measures the exhaust flows from the TPL hot cell, each hot box, and the fume hood, and each exhaust flow rate has a nominal value. An operational alarm sounds if the flow rate exceeds ±20 percent of its nominal value, informing the operators that there is a potential problem. It is still adequate to maintain proper conditions to prevent leakage of radioactive particulates or gases from these spaces. In addition, there air monitors at four locations surrounding the fume hood and hot cell/hot boxes that sense gaseous and particulate activity and alarm if levels are high. Finally, each TPL worker receives an annual whole-body count verifying that radiological controls adequately protect him or her. C-AD considers the low-flow alarm, the air monitor, and the whole-body counting program defense-in-depth to ensure that work is safe in the TPL. The work planning and approval by the TPL Supervisor to open the barriers into the hot cell/ hot boxes ensures that all safety steps are in place, and approved by line management before this work begins.

5.11.5.Calibration, Testing, Maintenance, and Inspections that Support Credited Controls

The calibration, testing, maintenance or inspections needed to support Credited Controls are as follows. See Section 5.7.6 for the bases of the following ASE requirements.

- The BLIP interlock system that removes beam by turning off Linac bending magnets, BM1 and BM2, must be functionally tested in accordance with requirements in the BNL Radiological Control Manual or, following a longer shutdown period, before starting beam operations
- Area radiation monitors must undergo annual calibration (not to exceed 15 months)
- Radiological shielding and barriers at BLIP and RRPL must undergo annual visual inspection to ensure that they are in place and functional, or, following a longer shutdown period, prior to starting any work involving radioactive materials

The RRPL ventilation exhaust system must be functionally tested annually (not to exceed 15 months) or, following a longer shutdown period, before initiating any work involving radioactive materials (ASE). **Bases:** Although this system operates at all times, thus continuously demonstrating that it operable, documenting a test of all configurations and recording results ensures this further. The C-AD allows testing in discrete portions as long as the tests cover the entire system once per year.

The low airflow alarm for the BLIP tank hotbox exhaust-ventilation-system must undergo an annual functional check (not to exceed 15 months) (ASE). **Bases:** The C-AD recently tested the BLIP hotbox ventilation alarm to verify that this functional test is adequate. The exhaust fan has a variable speed motor. The alarm sounded at ~20 Hz fan motor frequency and ~150 CFM. As a defense-in-depth, the Fast Beam Interrupt system removed the beam, which is a machine-protection and defense-in-depth system for safety. BNL's F&O set the motor controller to a minimum frequency of 33.8 Hz for ~265 CFM. Normal fan speed is set at 60 Hz, which corresponds to ~490 CFM.

A smoke test to verify that the TPL fume hoods and hot/box/hot cells are maintained at a negative pressure when the nominal exhaust flow rates from each of these containments are at

nominal flow shall be completed on an annual basis or, following a longer shutdown period, prior to any work involving radioactive materials (ASE). **Bases:** This qualitative test verifies that the fume hood and hot cells/hot box are at a negative pressure relative to the TPL room. The C-AD tested this method with only one of the two exhaust fans (EF-1 and EF-2) operating, and the smoke test showed significant suction of the released smoke into the hot cell/hot boxes. The single fan caused the exhaust flows from the hot cell/hot boxes to drop to 68% to 82% of the nominal flow when both fans were on.

Rainwater barriers for activated soil must be inspected visually each year to ensure that they are in place and functional (ASE). **Bases:** Experience revealed that annual inspections are adequate to disclose problems with impermeable caps. The C-AD has not experienced any significant cap failures that resulted in groundwater contamination since this program started over 10 years ago. This inspection interval coincides with the annual operating periods for the C-AD facilities. The C-AD performs the inspection during the annual shutdown of the accelerators before operations begin.

The C-AD must visually inspect the rainwater barriers for the BLIP-spur activated soil areas twice in 12-months (not to exceed 8 months) (ASE). **Bases:** The basis for this inspection interval is a documented agreement. See the Memorandum of Understanding, BLIP and g-2 Cap Inspection Process dated June 25, 2007, and Record of Decision for Area of Concern 16T g-2 Tritium Source Area and Groundwater Plume, Area of Concern 16K Brookhaven Linac Isotope Producer and Area of Concern 12 Former Underground Storage Tanks dated April 6, 2007. The entire inspection process became the responsibility of the C-AD in October 2010 when BNL transferred the BLIP to C-AD. The ROD requires visual inspections of the g-2 and BLIP source area cap at a frequency of at least twice per year; there is no specified interval between these inspections. The C-AD based the 2-month extension on experience and engineering judgment to provide for operational flexibility for scheduling and performing the inspections. The C-AD does not rely routinely on the extension. If the two-month extension extends to eight months for the first inspection, then the second inspection must be in the next twelve-month period.

5.11.6.Administrative Controls

While not treated the same as Credited Controls or Supports, administrative controls in this section provide defense-in-depth to help ensure the operational integrity of the Credited Controls during operations. These administrative controls are as follows.

The C-AD must maintain environmental monitoring systems for BLIP's airborne emissions per BNL's SBMS requirements (ASE). **Bases:** The C-AD monitors BLIP emissions by meeting ANSI requirements for stack design and monitoring. This avoids the possibility of violating the EPA requirements.

The C-AD must use approved configuration control procedures to review modifications of the BLIP systems and its targets, the RRPL systems, or the BLIP's beam current against ASE requirements (ASE). **Bases:** This ensures that C-AD has a system to review all modifications that could potentially violate the assumptions in the SAD safety analysis, or in the ASE requirements.

The C-AD must review each BLIP experiment and/or significant change in target design for safety before running BLIP with the beam (ASE). **Bases:** This ensures the adequate review of experimental installations and modification before initial operations. These reviews are part of

the configuration-management program guaranteeing that these changes do not involve USIs and do not violate ASE requirements.

The C-AD must document modifications to BLIP or RRPL determined to increase the frequency or consequences of known hazards, or which introduce new ones, using the Unreviewed Safety Issue Determination (USID) process. The C-AD may not implement the modification if a positive USID without the DOE's approval (ASE). **Bases:** This ensures adequate review of modification before initial operations. These reviews are part of the configuration-management program that ensures changes do not involve USIs, do not violate the ASE requirements, and do not potentially violate the assumptions in the safety analysis. The USID process would document the impacts of such changes, and would ensure the DOEs approval of a change to the ASE, should it be required, before the changes go into effect.

Beam-loss induced radiation within uncontrolled areas for credible repeated losses must be less than 100 mrem in a year. The C-AD shall use BNL's environmental TLD monitors to check the effectiveness of the C-AD radiation control program (ASE). **Bases:** The C-AD uses this control so as not to exceed the DOE's limit of 100 mrem per year to anon-radiation worker. This satisfies the requirements in DOE Order 458.1, Radiation Protection of the Public and the Environment.

5.12.The Bases for Credited Controls for NSRL Operations

5.12.1.Credited Controls for Maximum Credible Incidents - ASE Limits

The C-AD uses Credited Controls for NSRL operations to protect the environment, workers, and the public and ensure that those operations stay within the assumptions in the C-AD SAD safety analysis. Credited Controls for NSRL operations are as follows.

For the NSRL, the annual limit on the number and kinetic energy of high-energy nucleons extracted from the Booster slow-extracted beam (SEB) system is no greater than 10^{17} GeV in one year (ASE). **Bases:** The C-AD assumed this bounding annual particle-energy limit in all NSRL dose- and dose-rate calculations in the safety analysis, thereby maintaining the dose to surrounding un-controlled areas to less than 25 mrem in one year.

The hourly limit on the number and kinetic energy of high-energy nucleons extracted from the Booster slow-extraction system is no greater than $6x10^{14}$ GeV in one hour (ASE). **Bases:** The C-AD assumed this bounding hourly particle-energy limit in the SAD for all NSRL dose- and dose-rate calculations, so keeping the dose rate at the end of the Target Room labyrinth in B958 to less than 1 mrem/h.

The hourly limit on the number and kinetic energy of high-energy nucleons entering the NSRL Target Room and beam stop is no greater than $6x10^{14}$ GeV in one hour (ASE). **Bases:** The C-AD assumed this bounding hourly particle-energy annual limit in the SAD for all NSRL's dose- and dose-rate calculations, so maintaining the dose rate at the top of the NSRL berm at the beam dump to less than 5 mrem/h.

The annual limit on the number and kinetic energy of high-energy nucleons on the NSRL's beam stop is no greater than $3x10^{16}$ GeV in one year (ASE). **Bases:** The C-AD assumed this bounding annual particle-energy limit for all NSRL dose- and dose-rate calculations in the SAD. This maintains the dose to surrounding un-controlled areas to much less than 25 mrem in one year.

5.12.2.Credited Control for Radiation Hazards Due to Access

During beam operations, an access control system must prevent access to beam (ASE). **Bases:** The ACS is the Credited Control that prohibits access to accelerator enclosures during operations with beam; if access is forced, the ACS removes beam. The design of the access-controls system is fail-safe and configuration-controlled. The C-AD Radiation Safety Committee approves any changes that may affect the reliability of the system's safety function.

5.12.3.Credited Control Supports to Protect Against Radiation

The C-AD protects groundwater by using a soil cap over activated soil shielding if the calculated annual activity concentration of sodium-22 in leachate exceeds 25%, or tritium in leachate exceeds 5% of the Drinking Water Standard. BNL's management may waive a cap requirement (ASE). Section 5.7.4 gives the **Bases** for this Credited Control Support and the following, which are similar to Supports listed in Section 5.7.4.

- Authorized Alternative: If the C-AD discovers a breach in an installed cap, the alternative equivalent protection, approved by their management, must be in place within 10 days of discovery (ASE)
- Before beam operations, the beam-line enclosures must have all shielding (berms, shield blocks, and fencing) properly in place and configuration-controlled (ASE)
- During beam operations at the NSRL, the associated ACS must be functional. This means that the portions of the ACS that prevent exposure to beam radiation inside enclosures and that remove the beam when excessive beam loss occurs are functional (ASE)
- During beam operations at the NSRL, the area radiation monitors interfaced with the ACS to remove beam when they sense excessive beam loss must be within their calibration date (ASE)
- During beam operations, the locations of area radiation monitors interfaced with the ACS must be configuration-controlled (ASE)

During operations with beam, BNL's quarterly environmental TLDs near NSRL and BNL's monthly personnel monitoring TLDs at the entrance to Building 958 must be in place to monitor radiation levels to maintain these areas uncontrolled (ASE). **Bases:** The annual limit on the number and kinetic energy of high-energy nucleons on the NSRL beam stop must be no greater than $3x10^{16}$ GeV in one year. The C-AD checks this parameter using beam instrumentation and a procedure, and validates this level on the dump by ensuring the uncontrolled areas near the beam stop, dump, and Target Room at NSRL are less than 25 mrem in one year above background. This annual dose is the basis of the shielding for these areas and thus, the basis for the annual particle-energy limit on the beam-stop.

5.12.4.Calibration, Testing, Maintenance, and Inspections that Support Credited Controls

The calibration, testing, maintenance or inspections needed to support Credited Controls are as follows. Section 5.7.6 details the **Bases** for the following ASE Credited Control Supports, which are similar to Supports listed in Section 5.7.6.

- The C-AD must functionally test the ACS in accordance with requirements in the BNL Radiation Control Manual (ASE)
- Area-radiation monitors must undergo annual calibration (not to exceed 15 months) (ASE)
- Radiological shielding and barriers (berms, shield blocks, fencing) must undergo visual inspection before operations to ensure that they are in place and functional (ASE)
- Rainwater barriers for activated soil must undergo annual visual inspections to ensure that they are in place and functional (ASE)

Target Room and Support Building ventilation exhaust fans must undergo annual testing and testing must not to exceed 15 months (ASE). **Bases:** The Target Room's fan is always operating. This test verifies its operability and ensures that the dose to a person who remains in the Target Room for 60 minutes following 8 hours of NSRL's beam operations with the fan off is ALARA (~0.12 mrem). This level is well below any need to mitigate the dose. The C-AD uses the Support Building fans to minimize animal odors and to help minimize the buildup of CO_2 concentration in the building after an accidental release of carbon dioxide from the stored CO_2 cylinders used in the Cell Rooms.

5.12.5.Administrative Controls

While not treated as Credited Controls or Supports identified in the ASE, administrative controls provide defense-in-depth to help ensure the operational integrity of all controls during operations. For NSRL, these administrative controls are

- Minimum Main Control Room (MCR) and Experimental Area Staffing Controls (See Section 5.7.7 for the **Bases** of similar controls)
    - C-A Main Control Room: One qualified Operations Coordinator and one qualified operator must be on duty when NSRL's beam is in operation. During normal operations, one of the two must remain in the Main Control Room at all times (ASE)
    - Authorized Alternative: If one operator is incapacitated, the remaining operator may continue operations as long as C-AD restores staffing requirements within two hours (ASE)

The minimum NSRL experimental area staffing must be a qualified Collider Accelerator Support (CAS) watch person for operations with beam (ASE). **Bases:** This requirement assures that there are shift personal to respond to problems in the field outside the MCR. The C-AD bases this on experience with many experiments conducted throughout the history of large accelerators at BNL.

The minimum NSRL staffing at Building 958 must be a qualified NSRL operator for the NSRL's Target Room operations with beam. This requirement assures that there is an experienced person ensuring the correct amount of beam on targets at the NSRL facility during operations with beam.

- Facility and Experiment Modification and Controls (See Section 5.7.7 for the **Bases** of similar controls)
    - Approved configuration control procedures must ensure a review of modifications against Credited Controls in the ASE requirements (ASE)
    - The C-AD must review each experiment in the NSRL Target Room for configuration control and safety before running with beam. The C-AD may let an experiment lie dormant for longer than one year between runs and not require a review during the

dormancy period. For experiments that may run more than once within 12-months, review must occur as determined by C-AD's management before each singular scheduled run (ASE)

- The C-AD must document modifications that are determined to increase the frequency or consequences of known hazards or which introduce new ones, using the Unreviewed Safety Issue Determination (USID) process. If C-AD identifies a positive USID, then the C-AD must not implement the modification without the DOE's approval (ASE)
- Beam-loss-induced radiation within uncontrolled areas for credible repeated losses must be less than 100 mrem in a year. The C-AD shall use BNL's environmental TLD monitors to check the effectiveness of their radiation-control program (ASE)

As a best practice, the NSRL's Support Laboratories Class II Type A biological-safety-cabinet (BSC) HEPA-filter efficiency and cabinet face-velocity-tests must be performed *in situ* at the time of installation, at any time the BSC is moved, and at least annually thereafter, and must not exceed 15 months. If these tests are not current, the C-AD must not use the associated BSC until completion of successful testing (ASE). **Bases:** This best practice conservatively complies with the requirements for HEPA filter testing for biological safety indicated by Centers for Disease Control and Prevention. The C-AD bases the 3-month extension on experience and engineering judgment, allowing it for operational flexibility for scheduling and performing the inspection. The C-AD does not rely on the extension as routine practice. HEPA filter efficiency slowly increases over time as the filter builds up a layer of particulates.

5.13.Reference Documents for the Bases for Credited Controls

Aside from the safety analyses and references in Chapter 4, C-AD used the following reference documents to help formulate the bases for ASE limits and controls.

- 10 CFR 835, Operational Radiation Protection
- American Industrial Hygiene Association, Emergency Response Planning Guidelines
- BNL Radiological Control Manual
- BNL SBMS Accelerator Safety Subject Area, Design Practice for Known Beam Loss Locations
- DOE 420.1B, Facility Safety, Chapter II Fire Safety and Chapter IV Natural Phenomena Hazards Mitigation
- DOE Guide G 420.2B-1, Accelerator Facility Safety Implementation Guide for DOE O 420.2B, Safety of Accelerator Facilities, July 2005.
- DOE Order 420.2B, Safety of Accelerator Facilities, July 2004, and its successor Order
- DOE-STD-1020-2002, Natural Phenomena Hazards Design and Evaluation Criteria for Department of Energy Facilities, January 2002.
- EPA Protective Action Guide 400-R-92-001
- SBMS Subject Area: Oxygen Deficiency Hazards (ODH), System Classification and Controls

Accelerator Safety Envelope

Title of Facility: Prototype Energy Recovery Linac (ERL)

Date of Initial ASE: 12/2008

Subsequent Revision Dates: 5/2011, 5/2012

Signature of Preparer:

_____

Signature of Collider-Accelerator Associate Chair for Accelerator R&D:

_____

Signature of Collider-Accelerator Department Chair:

_____

Signature of Nuclear and Particle Physics Associate Laboratory Director:

_____

Signature of Deputy Director for Operations:

_____

Section 1: Introduction

This ASE defines the Prototype ERL ASE Credited Controls and their Supports that are unique to accelerators necessary to ensure safe operations and to ensure that the potential accelerator-related risks to the public, workers and environment are minimized. Other legal and DOE Order requirements not unique to accelerators are implemented via compliance with the BNL Standards Based Management System (SBMS) Subject Areas.

1.1. The method used by the Collider-Accelerator Department (C-AD) for change control of this ASE is described in the BNL Subject Area on Accelerator Safety.

1.2. A variation away from the Credited Controls and their Supports, which are described in Sections 2, 3, and 4 of this ASE, must be treated as a violation of the ASE and must be a reportable occurrence, as defined by the BNL SBMS Subject Area on Occurrence Reporting. A violation is defined as not satisfying a Credited Control, its Supports or its Authorized Alternative. C-AD staff must make notifications of occurrences according to the requirements in the C-AD Operations Procedure Manual.

1.3. Section 5, Administrative Controls, are not Credited Controls but provide defense-in-depth that supports compliance with the requirements in Sections 2 through 4. A violation of Section 5 requirements will be evaluated by management to determine if a reportable occurrence is needed.

1.4. If a Credited Control or its Supports are not satisfied and it has a specific Authorized Alternative, then take immediate actions to implement the Authorized Alternative or stop the activity that uses the affected equipment as soon as practicable.

1.5. If a Credited Control Requirement or its Supports have no specific Authorized Alternative and is not satisfied, then stop the activity that uses the affected Credited Control as soon as practicable.

1.6. Emergency actions may be taken that depart from a Credited Control or its Supports when no actions consistent with the Credited Control are immediately apparent and when these actions are needed to protect the public, worker and environmental safety. These emergency actions must be approved by the person in charge of facility safety, as defined in the operating procedures, when the emergency occurs and must be reported to C-AD management within 2-hours.

Section 2: Credited Controls

This section contains the Credited Controls that limit accelerator operations in order to protect the environment, workers, and the public by ensuring that those operations are conducted within the assumptions in the approved C-AD SAD. Credited Controls for Prototype ERL operations are:

Credited Controls for Maximum Credible Incident

The following limits are the maximum beam energy and beam power that the Prototype ERL is capable of. These Credited Controls cannot be exceeded without changing the structures, systems and components (SSC) of the Prototype ERL. Changing Prototype ERL SSC requires authorization by C-AD management.

2.1. Electron kinetic energy must be limited to 3.5 MeV for the superconducting RF gun.

2.2. The power source of the superconducting gun must be limited to delivering 1.5 MW of power to the gun.

2.3. Electron kinetic energy limit must be limited to 25 MeV for the Prototype ERL ring.

2.4. Electron beam power must not exceed the equivalent of 10 MW of instantaneous power for the electron beam in the Prototype ERL ring.

2.5. The power source for the five-cell cavity must be limited to delivering a maximum of 60 kW of power to the cavity.

2.6. Beam power must not exceed 1.5 MW for a 3.5 MeV electron beam striking the beam dump.

Credited Control for Radiation Hazard Due to Access

2.7. During beam operations, an access control system (ACS) must prevent access to beam.

Credited Control for Oxygen Deficiency Hazard (ODH)

2.8. Engineered systems (interlocks and alarms) must be in place to minimize the likelihood of injury/illness from a release of inert gas.

Section 3: Credited Control Supports

This section identifies the measurable limitations on Supports for Credited Controls that ensure that Prototype ERL operations do not exceed the Credited Controls in Section 2. These Credited Control Supports are derived from the safety analyses described in the approved C-AD SAD. They are:

Credited Control Supports to Protect against Radiation

3.1. Before beam or other radiation producing operations (e.g. electron gun or 5-cell cavity operations and testing), Prototype ERL enclosures must have all shielding properly in place and configuration controlled.

3.2. During beam or other radiation producing operations (e.g. electron gun or 5-cell cavity operations and testing), the ERL ACS must be functional. This means that the portions of the ACS that prevent exposure to beam radiation or RF generated x-rays inside enclosures and that remove beam or turn off RF when excessive beam loss or x-ray radiation occurs are functional.

3.3. During the beam or other radiation producing operations, area radiation monitors that are interfaced with the ERL ACS to remove beam when excessive beam loss is sensed must be within their calibration date.

3.4. During beam or other radiation producing operations, the locations of area radiation monitors interfaced with the ERL ACS must be configuration controlled.

Credited Control Supports to Protect against an ODH in ERL Accelerator Enclosure (Block House) or Compressor/Vacuum/Water Building~~Pump Room~~

3.5. When cryogens are charged in the system, exhaust fans and the ODH portion of the ERL ACS must be operable, that is, when the oxygen concentration falls below 18% (nominal) in either the ERL block house or the ERL Compressor/Vacuum/Water Building~~pump room~~ the associated ODH fan must turn on.

Authorized Alternative: Upon discovery that either exhaust fan is not operable or the ODH portion of the ERL ACS is out of service, entry to the affected building (i.e., ERL block house or ERL Compressor/Vacuum/Water building~~pump room~~) is allowed if each entrant has their own 5-minute escape pack (or a self-contained breathing apparatus) and a portable oxygen monitor.

3.6. ~~If the 11,000-gallon liquid nitrogen (LN) tank line inside Building 912 is charged with LN, and the supply tank is not isolated from the building,~~ If the liquid nitrogen supply line inside Building 912 is charged with LN, and this line is not isolated from the 11,000 gallon liquid nitorgen (LN) tank, then the installed building oxygen monitors in EEBA and NEBA must alarm locally if the oxygen concentration falls below 18% (nominal).

Authorized Alternative: Upon discovery that either installed EEBA or NEBA oxygen monitors are out of service, then entry into EEBA or NEBA portions of Building 912 is allowed if each entrant has their own portable oxygen monitor.

Section 4: Calibration, Testing, Maintenance and Inspection that Supports Credited Controls

The calibration, testing, maintenance or inspections needed to support Credited Controls are:

4.1. The Access Control System must be functionally tested in accordance with requirements in the BNL Radiation Control Manual.

4.2. Area radiation monitors must undergo annual calibration (not to exceed 15 months).

4.3. If cryogens are charged in the system, the ventilation exhaust fans and associated oxygen monitors used to mitigate an oxygen deficiency event must undergo annual testing (not to exceed 15 months).

4.4. Radiological shielding and barriers (e.g., shield blocks, fencing, etc.) must undergo visual inspection prior to operations to ensure that they are in place and functional.

Section 5: Administrative Controls

Administrative controls provide defense-in-depth to help ensure the operational integrity of the Credited Controls during operations. These administrative controls are:

5.1. Minimum Prototype ERL Control Room Staffing

5.1.1. Prototype ERL Control Room: one qualified Operator and one other person (i.e., ERL Operator-in-Training or ERL Physicist) must be on duty when Prototype ERL beam is in operation. During beam operations, one of the two people must remain in the Prototype ERL Control Room at all times.

Authorized Alternative: If the extra person (i.e., ERL Operator-in-Training or ERL Physicist) is incapacitated, the qualified Trained Operator may continue operations as long as manning requirements are restored within two hours.

5.2. Prototype ERL Modification and Controls

5.2.1. Approved Configuration Control procedures must be used to ensure review of modifications against Credited Controls in ASE requirements.

5.2.2. Each Prototype ERL experiment or re-configuration of accelerator components, if any, must be reviewed by C-AD for Configuration Control and safety before running with beam.

5.2.3. An experiment or reconfiguration of the accelerator may lie dormant for a period greater than one year and not require a review during the dormancy period. For experiments that may run more than once in a 12-month period, review must occur as determined by C-AD management before each scheduled run.

5.2.4. Modifications to the Prototype ERL that are determined to increase the frequency or consequences of known hazards or which introduce new hazards must be documented using the Unreviewed Safety Issue Determination (USID) process. If a positive USID exists, the modification may not be implemented without DOE approval.

5.3. Beam loss induced radiation within uncontrolled areas for credible repeated losses must be less than 100 mrem in a year. C-AD shall use BNL's environmental TLD monitors to check the effectiveness of the C-AD radiation control program.

5.4. ODH area classification must comply with the requirements in the BNL SBMS Subject Area, ODH Classification/Controls.

C-AD Unreviewed Safety Issue (USI) Determination Form

Title of USI Determination: ERL Cave ODH Analysis Revision Because of Lower Measured Fan Capacity

Description of USI Determination (use attachments): See Attachment 1

Title and Date of Relevant SAD: C-AD Safety Assessment Document (SAD) dated May 2011

Associate Chair for ESSHQ or ESSHQ Division Head must initial all applicable determinations and actions. Write N/A for non-applicable. Leave no blanks.

Determinations and Actions	Initial or Indicate N/A
Determination: The current SAD and/or ASE addresses the hazard associated with the proposed work, event or activity.	[RCK]
Determination: This activity does not constitute a USI.	[RCK]
Action: Use this Form, the USI Checklist and attached description, if any, to document the USI Determination until the next revision of the SAD.	[RCK]
Action: Include this USI Determination as a reference on the ESSHQ Division website "Authorization Bases" after approval by the C-AD Associate Chair for ESSHQ.	[RCK]
Determination: The hazard associated with the proposed work is not analyzed or is not correctly bounded in the C-AD SAD and/or it is not controlled by an ASE.	[NA]
Action: Submit the USI Determination or a revised SAD and/or ASE to the BNL ESH Committee.	[NA]
Action: Do not perform activity until BNL has approved.	[NA]
Action: Do not perform activity until DOE has approved.	[NA]

Raymond Karol — 4-22-2014

Signature of C-AD ESSHQ Division Head — Date

Edward T Lessard — 4-22-2014

Signature of C-AD Associate Chair for ESSHQ — Date

Attachment 1
Revised ODH Calculation for ERL Cave ODH Classification

Following measurement of the actual ERL Cave ODH exhaust fan velocity profile[1], the fan capacity was found to be ~9750 CFM instead of the original design value of 13.750 CFM. The measurement was made to verify the fan capacity assumed in the original calculation referenced in the C-AD SAD, Section 4.16.5. The ODH calculation was revised[2] using 9500 CFM ODH fan capacity. As shown in the attached calculation, the ERL Cave is still well within the definition of an ODH 0 classification, thus there is no Unreviewed Safety Issue associated with this change.

[1] email from D. Carroll to R. Conte dated 4/3/14, ERL ODH Fan measurements

[2] R. Karol, ERL ODH Calculations (Updated 4/21/14 following ERL cave ODH fan flow measurements), dated January 8, 2008 (Revised 6/16/08 and 4/21/14)

Collider-Accelerator Department

BROOKHAVEN
NATIONAL LABORATORY

Building 911-A
P.O. Box 5000
Upton, NY 11973-5000
Phone 631 344-5272
Fax 631 344-5676
rck@bnl.gov

managed by Brookhaven Science Associates
for the U.S. Department of Energy

Memo

Date: January 8, 2008 (Revised 6/16/08 and 4/21/14)

To: E. Lessard

From: R. C. Karol

Subject: ERL ODH Calculations (Updated 4/21/14 following ERL cave ODH fan flow measurements)

Purpose

To compute the appropriate ODH class for the ERL Cave in B912 and the ERL helium recovery building located just north of B912. Oxygen deficiency can be caused by a leak of cold helium or nitrogen fluid present in these buildings.

Summary and Conclusions

The goal of this calculation was to determine the Oxygen Deficiency Hazard (ODH) risk for the ERL Cave in B912 and the ERL helium recovery building located just north of B912 by computing the fatality rate for a major cryogenic fluid release. A spectrum of events may cause an oxygen deficiency. A major cryogenic system failure has been chosen to bound the consequences of all credible failures in the ERL Cave and the ERL helium recovery building as shown below. Spill rates are assumed to remain constant throughout the release. In addition, a catastrophic failure of a 500L cryogenic Dewar in the ERL Cave was examined.

Building	Free Volume	Bounding Cryogenic Leak Location	Spill Rate (SCFM) [Reference 1]	ODH Exhaust Fan Capacity (SCFM)
ERL Cave in B912	20,000 ft^3	Failure of 1-inch copper LN2 transfer line	3275	13,750 (design) **9700 (measured[3])**
ERL Helium Recovery Building	9500 ft^3	Rupture of Kinney vacuum pump helium discharge line	1150	4,850

It is concluded that the ERL Cave and the ERL helium recovery building be classified as ODH 0 areas.

[3] email from D. Carroll to R. Conte dated 4/3/14, ERL ODH Fan measurements

Applicable Criteria

The method and criteria in the BNL ODH Subject Area [2] was used to determine the ODH class for each ERL building.

ODH Model Description

The Fermi Model is a prescribed method to determine the necessary level of hazard control for a building having the potential for oxygen deficiency. The fatality rate in the model is the product of two numbers. One quantity is the probability per hour of an event causing an oxygen deficiency. The other quantity is found by estimating the minimum oxygen concentration during the transient, assuming instantaneous mixing of the air and inert gas in the building volume, and is represented by a factor between 0 and 1 (see Figure 1). The computed fatality rate is then used to define the ODH class necessary to protect personnel.

The Oxygen Deficiency Hazard fatality rate is defined as:

$$\Phi = PF$$

where Φ = the ODH fatality rate per hour
P = the expected rate of the event per hour, i.e. initiator frequency
F = the fatality factor for the event (Figure 1)

The value of P, the initiator frequency, is determined by using actual equipment failure rate data taken from the BNL SBMS subject area.

Figure 1. Graph of the Fatality Factor (logarithmic scale) versus the Computed Oxygen Partial Pressure.

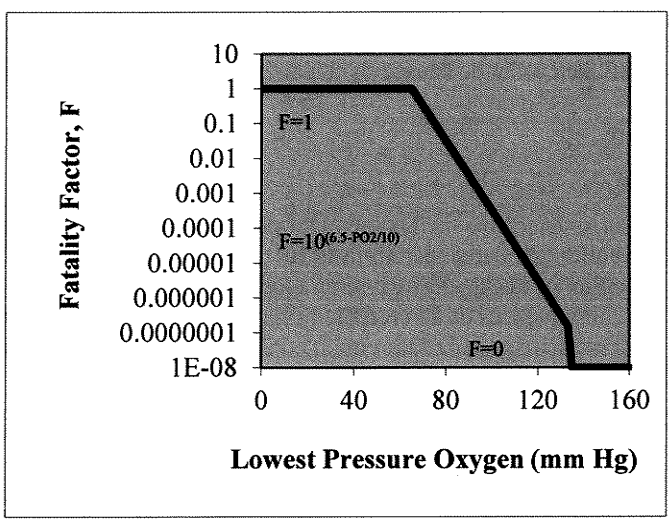

The value of the fatality factor, F, is the probability that a fatality will result if the inert gas release occurs. Figure 1 from the SBMS defines the relationship between the value of F and the computed oxygen partial pressure. The partial pressure is found by multiplying the mole fraction of oxygen in the building atmosphere by 760 mmHg. If the oxygen concentration is greater than 18% (~137 mmHg), then the value of F is defined to be zero. That is, all exposures above 18% are defined to be safe and do not contribute to fatality. If the oxygen concentration is 18%, then the value of F is defined to be 10^{-7}. At decreasing concentrations the value of F increases until, at some point, the probability of fatality becomes unity. That point is defined to be 8.8% (~67 mmHg) oxygen in the Fermi model, the concentration at which one minute of consciousness is expected.

The value of Φ, the fatality rate, is then used to determine the ODH class of the building as follows:

ODH Class	Fatality Rate (per hour)

NA	$<10^{-9}$
0	$\geq 10^{-9}$ but $<10^{-7}$
1	$\geq 10^{-7}$ but $<10^{-5}$
2	$\geq 10^{-5}$ but $<10^{-3}$
3	$\geq 10^{-3}$ but $<10^{-1}$
4	$\geq 10^{-1}$

The oxygen concentration in the building during a release of a gas is approximated by solving the following differential equations:

(a) If the exhaust fan is on and the spill rate of inert gas (R) is less than the exhaust fan capacity (Q):

$$V\frac{dC}{dt} = 0.21\,(Q - R) - QC$$

Where

V = building volume (ft^3)
C = oxygen concentration (mole fraction)
t = time (minutes)
Q = exhaust fan(s) flow rate (CFM)
R = inert gas spill rate into building (CFM)

Solving results in the following equation:

$$C(t) = 0.21\,[1 - R/Q(1-\exp(-Qt/R)]$$

(b) If the exhaust fan is off or if the inert gas spill rate (R) is greater than the exhaust fan capacity (Q):

$$V\frac{dC}{dt} = -RC$$

Solving results in the following equation:

$$C(t) = 0.21\,\exp(-Rt/V)$$

Assumptions

1. Building volumes were measured with appropriate corrections made for determining the free volume.

2. The ERL Cave exhaust fan starts 30 seconds after the cave oxygen concentration sensors fall to 18% and has an assumed capacity of 9500 CFM.

3. The ERL helium recovery building currently has no exhaust fan but has oxygen sensors which alarm at 18% oxygen concentration. An alternative is examined with an exhaust fan capacity of 4,850 CFM to ensure that the oxygen concentration never falls below 16%. The fan is assumed to start 30 seconds after the oxygen sensor trips at 18%.

4. The helium and nitrogen spill rates, assumed to remain constant, were obtained from Reference 1.

5. Outside air drawn into the ERL Cave has a 21% oxygen concentration.

6. As per the SBMS model, the oxygen concentration in the building is found by assuming instantaneous mixing of the air and cryogenic gas in the building volume.

Detailed Calculation and Analyses

1. **ERL Cave ODH Calculation:**

In order to simplify the calculation for the ERL Cave by avoiding a detailed analysis of the cryogenic system failure rates, the following was done:

1) Using the worst case cryogenic fluid spill rate [1], the time for the cave oxygen concentration to fall from 21% to 18% was determined using:

$$t = -\ln (0.18/0.21)\ V/R$$

where:
V = the ERL cave free volume, 20,000 ft^3
R = the maximum spill rate of nitrogen into the ERL cave, 3275 CFM

This results in a time of 0.94 minutes.

2) Assuming that it takes 30 seconds from the time of oxygen sensor trip until the ODH exhaust fan is at full capacity, the fan will be exhausting 1.44 minutes after spill initiation.

3) With t = 1.44 minutes, the oxygen concentration drops to a 13.8% with the exhaust fan at full capacity, assumed to be 9500 CFM.

4) Using this minimum oxygen concentration results in a partial pressure of 104.8 mmHg and a Fatality Factor, F, of 1.1×10^{-4}.

5) Next the initiator frequency, P, which results in a Fatality Rate, Φ of $<10^{-7}$ is found. A Fatality Rate of $<10^{-7}$ corresponds to an ODH 0 classification.

$$P = \Phi/F$$

Solving yields an allowable initiator frequency of $P = 9.1 \times 10^{-4}$ per hr to maintain an ODH 0 classification. This means that this major LN2 leak into the ERL cave resulting in a release of inert gas in the ERL cave could occur every 1100 hours (every 6.5 weeks) and still allow the cave to be classified as an ODH 0 area.

6) This initiator frequency is obviously unrealistically high compared to a credible frequency. Thus, controlling the ERL Cave as an ODH 0 area is acceptable and appropriate.

Finally, a catastrophic failure of a 500L He Dewar in the ERL Cave is examined to verify that ODH 0 is appropriate for this failure. The expansion ratio for helium from liquid helium at atmospheric pressure to room temperature helium gas at 70F is 754 [3]. Thus the released helium is 13,312 ft^3. Assuming perfect mixing of this release into the 20,000 ft^3 cave volume and ignoring any beneficial effects of the ODH exhaust fan, results in an oxygen concentration of 10.8%. The fatality factor at 10.8% oxygen is 1.96×10^{-2}. The probability of a Dewar rupture is 10^{-6} per hour [2], thus the Fatality Rate is 1.96×10^{-8} per hour. This is $<10^{-7}$ per hour so the designation of ODH 0 for the cave remains acceptable.

2. ERL Helium Recovery Building ODH Calculation:

The ERL helium recovery building ODH classification is first examined by finding the time for the oxygen concentration to fall to a level that would cause the room to exceed an ODH 0 classification without ant ODH exhaust fan. It is conservatively assumed that the initiating frequency for this event is once a year or 1.14×10^{-4} per hour. The assumed failure rate is very conservative since SBMS lists pipe-section rupture frequencies as ranging from 10^{-8} to 10^{-10} per hour. The once per year failure rate accounts for a burn-in period when ERL is first started up and prevents having to do a detailed failure rate study of the systems in the helium recover building.

1) Using the worst case cryogenic fluid spill rate [1], the time for the helium recovery building oxygen concentration to fall from 21% to 18% was determined using:

$$t = -\ln (0.18/0.21)\ V/R$$

Where:
V = the ERL helium recovery building volume, 9500 ft^3
R = the maximum spill rate of helium into the ERL recovery building, 1150 CFM

This results in a time of 1.3 minutes.

2) Conservatively assuming that the initiator frequency, $P = 1.14 \times 10^{-4}$ per hour means that F must equal 8.77×10^{-4} to have an ODH 1 classification.

3) If $F = 8.77 \times 10^{-4}$, then the corresponding oxygen concentration is found using:

$$F = 10^{(6.5-PO2/10)}$$
$$C = PO2/760\ (100)\ \%\ \text{oxygen}$$

Solving yields PO2 = 95.6 mmHg and C = 12.6% oxygen.

4) The time from the start of the accident to reach 12.6% oxygen is found to be 4.2 minutes.

5) Thus with the restraint to maintain the room posted as ODH 0, there is only 2.9 minutes to evacuate the building after the ODH alarm sounds. This may be insufficient time to evacuate. The building has 2 doors and a footprint of 41' x 24' with three large equipment skids in the room.

As an alternative, an ODH exhaust fan having a capacity of 4,850 CFM is assumed. This alternative is necessary because the above scenario results in a low oxygen concentration and depends on a fairly rapid response time for the building occupants to escape. An exhaust fan capacity of 4,850 CFM was chosen to ensure that the oxygen concentration never falls below 16%.

1) From step 1 above it takes 1.3 minutes to trip the oxygen senor when the oxygen concentration falls to 18%.

2) Assuming that it takes 30 seconds from the time of oxygen sensor trip until the ODH exhaust fan is at full capacity, the fan will be exhausting 1.8 minutes after spill initiation.

3) With t = 1.8 minutes, the oxygen concentration drops to a 16.9% just as the exhaust fan reaches full capacity of 4,850 CFM. The oxygen concentration then slowly falls to a steady state value of 16%.

4) Using this minimum oxygen concentration results in a partial pressure of 122 mmHg and a Fatality Factor, F, of 2.2×10^{-6}.

5) Next the initiator frequency, P, which results in a Fatality Rate, Φ of $<10^{-7}$ is found. A fatality Rate of $<10^{-7}$ corresponds to an ODH 0 classification.

$$P = \Phi/F$$

6) Solving yields an allowable initiator frequency of P = 0.045 per hr to maintain an ODH 0 classification. This means that this major helium leak into the ERL helium recovery building, other pressure boundary failures with lower spill rates and human error resulting in a release of inert gas in the helium recovery building could occur every 22 hours and still allow the building to be classified as an ODH 0 area.

7) This initiator frequency is obviously unrealistically high compared to a credible frequency. Thus, controlling the ERL helium recovery building as an ODH 0 area is acceptable and appropriate.

This calculation was checked by Peter Cirnigliaro.

References

1. Email from Y. Than to R. Karol dated 1/8/08, ERL ODH Data
2. BNL Standards Based Management System Subject Area, ODH Classification/Controls
3. R.F. Barron, *Cryogenic Systems*, 2nd Edition, 1985, Oxford University Press, NY. Appendices B and D.

Commissioning Accelerator Safety Envelope for Low Power Test

Title of Facility: Prototype Energy Recovery Linac (ERL)

Date of Initial CASE: 4-25-2013

Subsequent Revision Dates:

Signature of Preparer:

Edward T Lessard

Signature of Collider-Accelerator Associate Chair for Accelerator R&D:

Ilan Ben-Zvi

Signature of Collider-Accelerator Department Chair:

Thomas Roser

Signature of Nuclear and Particle Physics Associate Laboratory Director:

David Lissauer 4/30/13

Signature of BNL Assistant Laboratory Director for Environment, Safety and Health:

Mark Mitchell 6/3/13

The 2011 C-AD SAD applies to this CASE

Section 1: Introduction

This CASE defines the Prototype ERL ASE Credited Controls and their Supports that are unique to accelerators necessary to ensure safe operations and to ensure that the potential accelerator-related risks to the public, workers and environment are minimized. Other legal and DOE Order requirements not unique to accelerators are implemented via compliance with the BNL Standards Based Management System (SBMS) Subject Areas.

1.1. The method used by the Collider-Accelerator Department (C-AD) for change control of this CASE is described in the BNL Subject Area on Accelerator Safety.

1.2. A variation away from the Credited Controls and their Supports, which are described in Sections 2, 3, and 4 of this ASE, must be treated as a violation of the ASE and must be a reportable occurrence, as defined by the BNL SBMS Subject Area on Occurrence Reporting. A violation is defined as not satisfying a Credited Control, its Supports or its Authorized Alternative. C-AD staff must make notifications of occurrences according to the requirements in the C-AD Operations Procedure Manual.

1.3. Section 5, Administrative Controls, are not Credited Controls but provide defense-in-depth that supports compliance with the requirements in Sections 2 through 4. A violation of Section 5 requirements will be evaluated by management to determine if a reportable occurrence is needed.

1.4. If a Credited Control or its Supports are not satisfied and it has a specific Authorized Alternative, then take immediate actions to implement the Authorized Alternative or stop the activity that uses the affected equipment as soon as practicable.

1.5. If a Credited Control Requirement or its Supports have no specific Authorized Alternative and is not satisfied, then stop the activity that uses the affected Credited Control as soon as practicable.

1.6. Emergency actions may be taken that depart from a Credited Control or its Supports when no actions consistent with the Credited Control are immediately apparent and when these actions are needed to protect the public, worker and environmental safety. These emergency actions must be approved by the person in charge of facility safety, as defined in the operating procedures, when the emergency occurs and must be reported to C-AD management within 2-hours.

Section 2: Credited Controls

This section contains the Credited Controls that limit accelerator operations in order to protect the environment, workers, and the public by ensuring that those operations are conducted within the assumptions in the approved C-AD SAD. Credited Controls for Prototype ERL operations are:

Credited Controls for Maximum Credible Incident

The following limits are the maximum beam energy and beam power that the Prototype ERL is capable of. These Credited Controls cannot be exceeded without changing the structures, systems and components (SSC) of the Prototype ERL. Changing Prototype ERL SSC requires authorization by C-AD management.

2.1. Electron kinetic energy must be limited to 3.5 MeV for the superconducting RF gun.

2.2. The electron beam power leaving the ERL Superconducting Gun or the five-cell cavity must be limited to 70 W averaged over 1 hour.

2.3. Electron kinetic energy limit must be limited to 25 MeV to the dump.

Credited Control for Radiation Hazard Due to Access

2.4. During beam operations, an access control system (ACS) must prevent access to beam.

Credited Control for Oxygen Deficiency Hazard (ODH)

2.5. Engineered systems (interlocks and alarms) must be in place to minimize the likelihood of injury/illness from a release of inert gas.

Section 3: Credited Control Supports

This section identifies the measurable limitations on Supports for Credited Controls that ensure that Prototype ERL operations do not exceed the Credited Controls in Section 2. These Credited Control Supports are derived from the safety analyses described in the approved C-AD SAD. They are:

Credited Control Supports to Protect against Radiation

3.1. Before beam or other radiation producing operations (e.g. electron gun or 5-cell cavity operations and testing), Prototype ERL enclosures must have all shielding properly in place and configuration controlled.

3.2. During beam or other radiation producing operations (e.g. electron gun or 5-cell cavity operations and testing), the ERL ACS must be functional. This means that the portions of the ACS that prevent exposure to beam radiation or RF generated x-rays inside enclosures and that remove beam or turn off RF when excessive beam loss or x-ray radiation occurs are functional.

3.3. During the beam or other radiation producing operations, area radiation monitors that are interfaced with the ERL ACS to remove beam when excessive beam loss is sensed must be within their calibration date.

3.4. During beam or other radiation producing operations, the locations of area radiation monitors interfaced with the ERL ACS must be configuration controlled.

Credited Control Supports to Protect against an ODH in ERL Accelerator Enclosure, Compressor/Vacuum/Water Building, and the EEBA[1] and NEBA[2] Portions of B912

3.5. When cryogens are charged in the system, exhaust fans and the ODH portion of the ERL ACS must be operable, that is, when the oxygen concentration falls below 18% (nominal) in either the ERL accelerator enclosure or the ERL Compressor/Vacuum/Water Building the associated ODH fan must turn on.

Authorized Alternative: Upon discovery that either exhaust fan is not operable or the ODH portion of the ERL ACS is out of service, entry to the affected building (i.e., ERL accelerator enclosure or ERL Compressor/Vacuum/Water building) is allowed if each entrant has their own 5-minute escape pack (or a self-contained breathing apparatus) and a portable oxygen monitor.

3.6. If the liquid nitrogen (LN) supply line inside Building 912 is charged with LN, and this line is not isolated from the 11,000-gallon LN tank, then the installed building oxygen

[1] East Experimental Building Addition
[2] Northeast Experimental Building Addition

monitors in EEBA, NEBA and the LVTF[3] must alarm locally if the oxygen concentration falls below 18% (nominal).

Authorized Alternative: Upon discovery that any installed oxygen monitor in EEBA, NEBA, ERL or the LVTF is out of service, then entry into EEBA or NEBA portions of Building 912 is allowed as long as requirement 3.7 is satisfied.

3.7. If any of the ODH monitors in NEBA, EEBA, ERL, or the LVTF sense oxygen concentration at 18% (nominal) or fail to be able to sense oxygen levels, then the air-operated valve at the 11,000 gallon LN tank located outside B912 must automatically close to isolate the LN supply to B912.

Authorized Alternative: Upon discovery that the automatic isolation valve at the LN tank is inoperable, the entire EEBA, NEBA portion of B912 including LVTFand SVTF[4] blockhouses and ERL accelerator enclosure, must be emptied of personnel as soon as practicable. Subsequent entry will only be allowed if the LN tank manual isolation valve is closed.

[3] The LVTF is not part of the ERL or its support system but it has a feature that can create an ODH in the EEBA portion of B912.

[4] Small Vertical Test Facility which is not part of the ERL or its support system but is located in EEBA and can be affected by an ODH condition in EEBA

Section 4: Calibration, Testing, Maintenance and Inspection that Supports Credited Controls

The calibration, testing, maintenance or inspections needed to support Credited Controls are:

4.1. The Access Control System must be functionally tested in accordance with requirements in the BNL Radiation Control Manual.

4.2. Area radiation monitors must undergo annual calibration (not to exceed 15 months).

4.3. If cryogens are charged in the system, the ventilation exhaust fans and associated oxygen monitors used to mitigate an oxygen deficiency event must undergo annual testing (not to exceed 15 months).

4.3.1. The ability of the air-operated valve at the 11,000 gallon LN tank outside B912 to isolate the LN tank if any ODH monitor in ERL, NEBA, EEBA or LVTF indicates less than 18% (nominal) oxygen concentration, or if any ODH sensor fails, must be functionally checked annually (not to exceed 15 months).

4.4. Radiological shielding and barriers (e.g., shield blocks, fencing, etc.) must undergo visual inspection prior to operations to ensure that they are in place and functional.

Section 5: Administrative Controls

Administrative controls provide defense-in-depth to help ensure the operational integrity of the Credited Controls during operations. These administrative controls are:

5.1. Minimum Prototype ERL Control Room Staffing

5.1.1. Prototype ERL Control Room: one qualified Operator and one other person (i.e., ERL Operator-in-Training or ERL Physicist) must be on duty when Prototype ERL beam is in operation. During beam operations, one of the two people must remain in the Prototype ERL Control Room at all times.

Authorized Alternative: If the extra person (i.e., ERL Operator-in-Training or ERL Physicist) is incapacitated, the qualified Trained Operator may continue operations as long as manning requirements are restored within two hours.

5.2. Prototype ERL Modification and Controls

5.2.1. Approved Configuration Control procedures must be used to ensure review of modifications against Credited Controls in ASE requirements.

5.2.2. Each Prototype ERL experiment or re-configuration of accelerator components, if any, must be reviewed by C-AD for Configuration Control and safety before running with beam.

5.2.3. An experiment or reconfiguration of the accelerator may lie dormant for a period greater than one year and not require a review during the dormancy period. For experiments that may run more than once in a 12-month period, review must occur as determined by C-AD management before each scheduled run.

5.2.4. Modifications to the Prototype ERL that are determined to increase the frequency or consequences of known hazards or which introduce new hazards must be documented using the Unreviewed Safety Issue determination (USI) process. If a USI exists, the modification may not be implemented without DOE approval.

5.3. Beam loss induced radiation within uncontrolled areas for credible repeated losses must be less than 100 mrem in a year. C-AD shall use BNL's environmental TLD monitors to check the effectiveness of the C-AD radiation control program.

5.4. ODH area classification must comply with the requirements in the BNL SBMS Subject Area, ODH Classification/Controls.

C-AD Unreviewed Safety Issue (USI) Determination Form

Title of USI Determination: ERL Low Power Test

Description of USI Determination (use attachments): see attachments

Title and Date of Relevant SAD: 2011 C-AD SAD

Associate Chair for ESSHQ or ESSHQ Division Head must initial all applicable determinations and actions. Write N/A for non-applicable. Leave no blanks.

Determinations and Actions	Initial or Indicate N/A
Determination: The current SAD and/or ASE addresses the hazard associated with the proposed work, event or activity.	[ETL]
Determination: This activity does not constitute a USI.	[N/A]
Action: Use this Form, the USI Checklist and attached description, if any, to document the USI Determination until the next revision of the SAD.	[ETL]
Action: Include this USI Determination as a reference on the ESSHQ Division website "Authorization Bases" after approval by the C-AD Associate Chair for ESSHQ.	[ETL]
Determination: The hazard associated with the proposed work is not analyzed or is not correctly bounded in the C-AD SAD and/or it is not controlled by an ASE.	[ETL]
Action: Submit the USI or a revised SAD and/or ASE to the BNL ESH Committee.	[ETL]
Action: Do not perform activity until BNL has approved.	[ETL]
Action: Do not perform activity until DOE has approved.	[ETL]

_____Signature on File_____ _____12-4-12_____
Signature of C-AD ESSHQ Division Head Date

_____Signature on File_____ _____12-4-12____
Signature of C-AD Associate Chair for ESSHQ Date

Exemption Request for Low-Power Testing of ERL SC Gun and 5-Cell Cavity

Introduction

The Collider-Accelerator Department (C-AD) Chairman is requesting the Laboratory ESH Committee (LESHC), the Assistant Laboratory Director for ESH (ALD for ESH) and Head of DOE Area Office (BHSO) approve or recommend for approval, as applicable, a low-power beam test of the ERL. To do these tests, C-AD management requests exemption from paragraph (4).(b) of the DOE Order 420.2C and corresponding SBMS Accelerator Safety Subject Area requirements, and allow the test described below. Specifically, please allow the tests prior to conducting an Accelerator Readiness Review (ARR) for the full ERL accelerator facility. This low power test is needed to optimize the beam to finish construction of the energy-recovery aspects of the accelerator. Systems are undergoing development at this stage. Low-power testing allows the development of operational efficiency. Conducting an ARR at this stage is neither practical nor necessary because of the nature of the hazard and the developmental nature of the low-power beam line. Demonstrating the energy-recovery aspect is necessary to construct a feasible eRHIC. C-AD bases the safety of the exemption request on the limited power and the low-level radiation hazard allowed for the test; that is, this device at this power limit would not likely produce an accessible radiological area.

Background

DOE Order 420.2C, Safety of Accelerator Facilities, Paragraph 3.c.(2) indicates DOE may approve accelerator exemptions, in addition to those examples listed in paragraph 3.c.(1). An exemption would result in not requiring the ERL superconducting gun and 5-cell cavity test to meet the provisions of paragraph 5 of the Order. This opportunity to request an exemption is also in the SBMS Accelerator Safety Subject Area. Such a request requires a review and recommendation for approval by the Laboratory Environmental, Health and Safety Committee (LESHC) and the approval of the BNL ALD for ESH prior to DOE approval.

Low-Power Testing Plan

C-AD will conduct the following low-power tests:

1) Beam out of the gun, and
2) Beam through the 5-cell accelerating cavity.

In both cases, the beam power will be limited to less than 70 watts. The control of the beam power will be done through the setting of the photocathode drive laser, pulse energy and repetition rate.

The photocathodes to be used in these tests are multi-alkali, mostly cesium potassium antimonide. The bunch charges will be less than one nanoCoulomb (nC) with the repetition rate adjusted to maintain the maximum beam power with the given beam energy.

1) The capability of the gun is a maximum beam energy of 3.5 MeV, and
2) The capability of the 5-cell cavity is a maximum beam energy of 25 MeV.

The pulse repetition frequency will be under 2.8 kHz for the maximum charge of 1 nC and maximum energy of 25 MeV. At lower pulse charges, the repetition frequency may be increased accordingly.

In the initial test (1), the diagnostic equipment will be a Faraday Cup (FC), an Integrating Current Transformer (ICT), and beam loss monitors (BLM). See Figure 1.

In the latter test (2), additional diagnostics will be beam position monitors, and beam profile monitors. See Figure 2.

Both tests will have a large array of radiation detectors, ion chambers and photomultiplier tubes (seen in Figures 1 and 2)

C-AD will conduct tests intermittently over a period of seven months after the onset of approved low-power testing. ERL management plans to request an ARR approximately three months (90 days) after the onset of the low-power test.

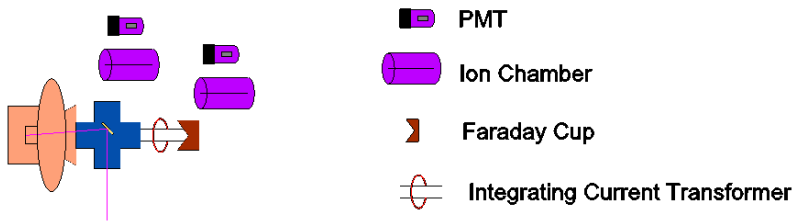

Figure 1 – Initial Test. Gun is on the left.

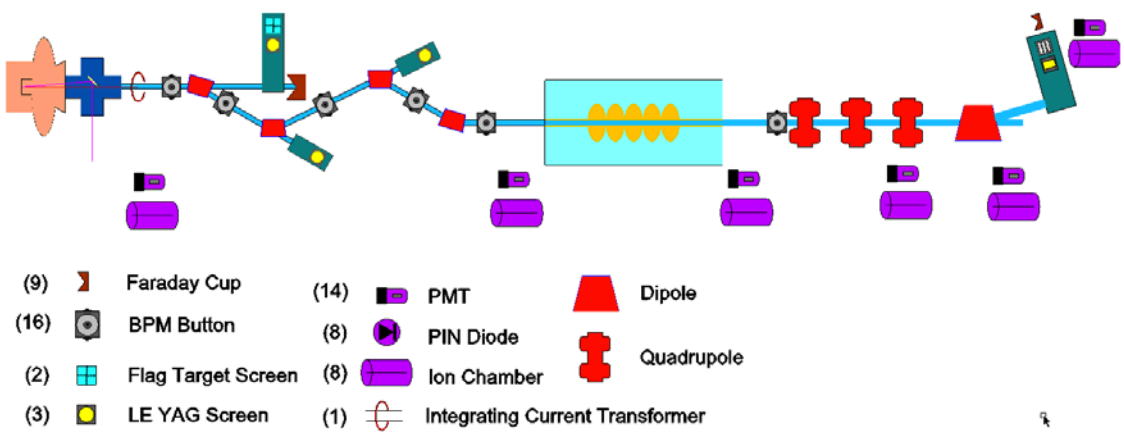

Figure 2 – Later Test

In Figure 2, the dipoles between the gun and the 5-cell cavity bend the beam vertically; that is, either toward the roof or toward the floor. The ERL experimental area sweep checklist addresses this and does not allow access to the roof of the ERL enclosure and access to the Building 912 roof.

Safety Basis for Exemption Request for Low-Power Testing

To test the ERL Superconducting Gun and 5-cell cavity at low power, C-AD management will adhere to an approved ERL Low Power ASE for this specific ERL Superconducting Gun and 5-Cell Cavity Test (see Attachment 1). With exception of Limits for the Maximum Credible Incident, C-AD adopts all Credited Controls and Supports associated with the approved June 6, 2012 ERL ASE, and reproduces them in the ERL Low Power ASE for this test. In the ERL Low Power ASE, C-AD defines a different set of Limits for the Maximum Credible Incident (MCI) in Section 2:

Limits for MCI

2.1. Electron kinetic energy must be limited to 3.5 MeV for the superconducting RF gun.
2.2. The electron beam power leaving the ERL Superconducting Gun or the five-cell cavity must be limited to 70 W averaged over 1 hour.
2.3. Electron kinetic energy limit must be limited to 25 MeV to the dump.

The bases for these MCI-related Limits are that shielding calculations show that a maximum 70 W beam power will allow C-AD to maintain the outside of the ERL enclosure as a Controlled Area under Maximum Credible Incident conditions.

Credited Control to Limit Beam Power during Low-Power Testing

The electron beam power will be limited by using alarming and interlocking radiation monitors around the ERL enclosure. C-AD will place alarming and interlocking radiation monitors outside the enclosure and confirm their appropriate location using fault studies and radiation surveys at the onset of low-power testing. The alarm and interlock set points outside the ERL enclosure will be set such that outside the enclosure, C-AD maintains radiation exposure no greater than that allowed for a Controlled Area in the event of the MCI fault.

Estimated Dose Rate during Low-Power Testing

The ERL enclosure uses bulk shielding and an Access Control System for radiation protection. The enclosure has side walls composed of between four- and eight-feet of light concrete. The thin sections of wall are shadowed from the potential sources with inner shield walls located appropriately. The inner shadow shields subtends all angles for any energy electron-beam bent by dipole magnets, and the roofs of the ERL enclosure and Building 912 are not allowed to be accessed (see RSC Minutes in References Section). The entire enclosure has a single layer of light concrete roof beams four feet thick, except for a transition region where the roof is two layers of beams. This transition region is where the 13 feet ceiling height in the center falls to 9 feet at both ends.

In the ERL configuration in Figure 2, the beam can be mis-steered up or down. A memorandum dated 10-1-2012 by K. Yip to the C-AD Radiation Safety Committee verifies that upwardly mis-steered low-energy beam (3.5 MeV) causes a maximum 7.15 mrem/h at 70 W on the ERL enclosure roof, which has no access, and 0.192 mrem/h at a distance of 20 feet such as the Building 912 roof. The beam would have to bend around the magnets and internal shielding

and then directly hit the 4-foot thick concrete ERL enclosure wall for these fault dose-rates to occur. C-AD appended this calculation to the 2011 C-AD SAD in the ERL USI for Low Power Testing.

In order to determine the effectiveness of the shielding at ERL, the maximum sustained beam loss assumed in the safety analyses section, Chapter 4, of the 2011 C-AD SAD was 1.2 MW for 3.5 MeV injection electrons. In Table 4.13.b. from the C-AD SAD, the experts who did the shield safety analyses assumed that credible sustainable beam losses were 1 W of electron beam at beam injection energy of 3.5 MeV and 60 kW at 25 MeV. The C-AD SAD shielding experts listed estimates of absorbed dose rates at the outside surface of the ERL's shielding for these assumed losses. Their Table in the C-AD SAD is as follows:

Table 4.13.b Dose Outside Prototype ERL Enclosure for 3.5- and 25-MeV Electrons

Condition	Instantaneous Dose Rate From Maximum Beam Loss[a]	Dose Rate From Sustainable Loss[b]	Dose From Sustainable Loss Assuming Interlock Occurs[d]
3.5MeV@ 0 degrees, γ	88,000 mrad/h	0.073 mrad/h	0.0002 mrad
3.5MeV@ 90 degrees, γ	18,000 mrad/h	0.015 mrad/h	0.00004 mrad
25 MeV@ 0 degrees, γ	65,000 mrad/h[c]	4000 mrad/h[c]	10 mrad[c]
25 MeV @ 90 degrees, γ	13,000 mrad/h	800 mrad/h	2.0 mrad
25 MeV neutrons	120 mrem/h	6.0 mrem/h	0.015 mrem

[a] The maximum instantaneous beam loss is 1.2 MW at 3.5 MeV, and 10 MW at 25 MeV, which would terminate after a small fraction of a second.
[b] The sustainable loss is 1 W for 3.5 MeV, and 60 kW for 25 MeV electrons is assumed.
[c] The forward-direction gamma-dose rates were reduced by a factor of 0.005 by the adding 2-feet of heavy concrete in the electron ring.
[d] As with all C-AD interlocking area-dose-rate monitors, a 9-second delay from sensing the trip point's dose rate to stopping of beam is conservatively assumed in SAD analyses.

Using columns 3 and 4 from Table 4.13.b, 0-degree beam, and assuming 70 W maximum sustained beam loss with alarming radiation monitors, then C-AD estimates the maximum sustainable dose rate outside the ERL enclosure at about 5 mrad/h (70 W x 0.073 mrad/h-W). Since C-AD will use both alarming and interlocking radiation monitors, the beam will shut within 9 seconds after reaching a set point of 2.5 mrem/h, and a maximum a 0.014 mrad absorbed-dose is expected (70 W x 0.0002 mrad/W) in such a fault. Because of an additional 2 feet of heavy concrete, 70 W also results in 5 mrad/h and about 0.014 mrad absorbed-dose in a fault with 25 MeV beam. Based on these estimates of absorbed dose in a fault, C-AD concludes no need for a Radiation Area in accessible locations adjacent to the ERL enclosure, and a Controlled Area will suffice for the test. This maximum radiological consequence is the safety basis for the exemption request from requirements in Section 5 of DOE O 420.2C for this specific low-power beam test. This level of hazard produces only local work area impacts and can be safely managed under the provisions of Title 10, Code of Federal Regulations (CFR), Part 835 and Part 851.

Specific Assurance Methods for Low-Power Testing

C-AD management has employed the following assurance methods specific to this test:

1) The C-AD RSC has reviewed the use of alarming and interlocking radiation monitors for this proposed low-power beam test,
2) The C-AD RSC will inspect the ERL enclosure shielding prior to testing with low power beam to ensure all inner shields intercept all possible beam energies and beam-bending by dipole magnets,
3) The C-AD RSC will inspect and approve the locations of alarming and interlocking radiation area monitors inside and outside the ERL enclosure,
4) The C-AD RSC will prepare a Radiation Safety Check-off list for the low-power tests that ensures the ERL access control system is operational, that alarming and interlocking radiation monitors are in place, and that shielding is in place,
5) Qualified operators and the engineered-safety-system owners must sign the Radiation Safety Check-off list prior to enabling beam,
6) The ERL Operations Coordinator will qualify each operator to respond to alarming and interlocking Chipmunk radiation monitors by observing their performance when executing the procedure,
7) The ERL Operations Coordinator will qualify each operator and other staff approved by ERL management to perform sweeps to enable the ERL enclosure for beam by observing their performance in executing the sweep procedure,
8) One qualified ERL operator is required to be present during any period of testing with low-power electron beam,
9) A qualified ERL operator is required to monitor and log beam energy and beam power at the beginning and end of each day of low-power beam tests,
10) The C-AD FS Representative will schedule radiation surveys near the external penetrations to the ERL enclosure and for the general areas outside the ERL enclosure during a test; additional surveys will be performed for several testing configurations that are within the specified MCI Limits (i.e., lower pulse charge and greater repetition frequency),
11) The Chair of the Radiation Safety Committee and the Head of the ESSHQ Division will review radiological surveys and e-log radiation monitor data with the FS Representative at the end of each day of low-power beam tests.
12) The ERL Operations Coordinator will re-sign the RSC checklist if more that 7 days elapses between sequential low-power beam tests after checking that other signatures on the list remain valid.
13) C-AD will place these requirements and the 70 W power limit into C-A OPM 2.5.6 during the period the exemption is in effect and before low-power testing is started.

Request for DOE O 420.2C Exemption in Order to Perform Low-Power Testing

C-AD management requests a seven-month exemption from paragraph (4).(b) of the DOE Order 420.2C and corresponding SBMS Accelerator Safety Subject Area requirements to allow testing of the ERL superconducting gun and 5-cell cavity at low power. Specifically, C-AD management requests low-power tests be allowed prior to conducting an Accelerator Readiness Review (ARR) for the full ERL accelerator facility and permission to commission. C-AD bases

the safety of the exemption request on the limited power, limited duration and the low-level radiation hazard allowed for the test, the review by the Radiation Safety Committee, the use of qualified operators, the implementation of alarming and interlocking radiation monitors, and daily oversight by C-AD managers.

References

June 6, 2012 ERL ASE

LESHC Minutes 12-04; password oper8

LESHC Minutes 11-10; password oper8

LESHC Minutes 11-04; password oper8

LESHC Minutes 08-13; password oper8

RSC Minutes Issued: November 11, 2012

RSC Minutes Issued: October 17, 2012

LESHC Minutes 13-02; password oper8

Attachments

Attachment 1, Commissioning Accelerator Safety Envelope for Low Power Test

Commissioning Accelerator Safety Envelope for Low Power Test

Title of Facility: Prototype Energy Recovery Linac (ERL)

Date of Initial CASE: 4-25-2013

Subsequent Revision Dates:

Signature of Preparer:

Edward T Lessard

Signature of Collider-Accelerator Associate Chair for Accelerator R&D:

Ilan Ben-Zvi

Signature of Collider-Accelerator Department Chair:

Thomas Roser

Signature of Nuclear and Particle Physics Associate Laboratory Director:

David Lissauer 4/30/13

Signature of BNL Assistant Laboratory Director for Environment, Safety and Health:

Mark Mirabelli 6/3/13

Section 1: Introduction

This CASE defines the Prototype ERL ASE Credited Controls and their Supports that are unique to accelerators necessary to ensure safe operations and to ensure that the potential accelerator-related risks to the public, workers and environment are minimized. Other legal and DOE Order requirements not unique to accelerators are implemented via compliance with the BNL Standards Based Management System (SBMS) Subject Areas.

1.1. The method used by the Collider-Accelerator Department (C-AD) for change control of this CASE is described in the BNL Subject Area on Accelerator Safety.

1.2. A variation away from the Credited Controls and their Supports, which are described in Sections 2, 3, and 4 of this ASE, must be treated as a violation of the ASE and must be a reportable occurrence, as defined by the BNL SBMS Subject Area on Occurrence Reporting. A violation is defined as not satisfying a Credited Control, its Supports or its Authorized Alternative. C-AD staff must make notifications of occurrences according to the requirements in the C-AD Operations Procedure Manual.

1.3. Section 5, Administrative Controls, are not Credited Controls but provide defense-in-depth that supports compliance with the requirements in Sections 2 through 4. A violation of Section 5 requirements will be evaluated by management to determine if a reportable occurrence is needed.

1.4. If a Credited Control or its Supports are not satisfied and it has a specific Authorized Alternative, then take immediate actions to implement the Authorized Alternative or stop the activity that uses the affected equipment as soon as practicable.

1.5. If a Credited Control Requirement or its Supports have no specific Authorized Alternative and is not satisfied, then stop the activity that uses the affected Credited Control as soon as practicable.

1.6. Emergency actions may be taken that depart from a Credited Control or its Supports when no actions consistent with the Credited Control are immediately apparent and when these actions are needed to protect the public, worker and environmental safety. These emergency actions must be approved by the person in charge of facility safety, as defined in the operating procedures, when the emergency occurs and must be reported to C-AD management within 2-hours.

Section 2: Credited Controls

This section contains the Credited Controls that limit accelerator operations in order to protect the environment, workers, and the public by ensuring that those operations are conducted within the assumptions in the approved C-AD SAD. Credited Controls for Prototype ERL operations are:

Credited Controls for Maximum Credible Incident

The following limits are the maximum beam energy and beam power that the Prototype ERL is capable of. These Credited Controls cannot be exceeded without changing the structures, systems and components (SSC) of the Prototype ERL. Changing Prototype ERL SSC requires authorization by C-AD management.

2.1. Electron kinetic energy must be limited to 3.5 MeV for the superconducting RF gun.

2.2. The electron beam power leaving the ERL Superconducting Gun or the five-cell cavity must be limited to 70 W averaged over 1 hour.

2.3. Electron kinetic energy limit must be limited to 25 MeV to the dump.

Credited Control for Radiation Hazard Due to Access

2.4. During beam operations, an access control system (ACS) must prevent access to beam.

Credited Control for Oxygen Deficiency Hazard (ODH)

2.5. Engineered systems (interlocks and alarms) must be in place to minimize the likelihood of injury/illness from a release of inert gas.

Section 3: Credited Control Supports

This section identifies the measurable limitations on Supports for Credited Controls that ensure that Prototype ERL operations do not exceed the Credited Controls in Section 2. These Credited Control Supports are derived from the safety analyses described in the approved C-AD SAD. They are:

Credited Control Supports to Protect against Radiation

3.1. Before beam or other radiation producing operations (e.g. electron gun or 5-cell cavity operations and testing), Prototype ERL enclosures must have all shielding properly in place and configuration controlled.

3.2. During beam or other radiation producing operations (e.g. electron gun or 5-cell cavity operations and testing), the ERL ACS must be functional. This means that the portions of the ACS that prevent exposure to beam radiation or RF generated x-rays inside enclosures and that remove beam or turn off RF when excessive beam loss or x-ray radiation occurs are functional.

3.3. During the beam or other radiation producing operations, area radiation monitors that are interfaced with the ERL ACS to remove beam when excessive beam loss is sensed must be within their calibration date.

3.4. During beam or other radiation producing operations, the locations of area radiation monitors interfaced with the ERL ACS must be configuration controlled.

Credited Control Supports to Protect against an ODH in ERL Accelerator Enclosure, Compressor/Vacuum/Water Building, and the EEBA[1] and NEBA[2] Portions of B912

3.5. When cryogens are charged in the system, exhaust fans and the ODH portion of the ERL ACS must be operable, that is, when the oxygen concentration falls below 18% (nominal) in either the ERL accelerator enclosure or the ERL Compressor/Vacuum/Water Building the associated ODH fan must turn on.

Authorized Alternative: Upon discovery that either exhaust fan is not operable or the ODH portion of the ERL ACS is out of service, entry to the affected building (i.e., ERL accelerator enclosure or ERL Compressor/Vacuum/Water building) is allowed if each entrant has their own 5-minute escape pack (or a self-contained breathing apparatus) and a portable oxygen monitor.

3.6. If the liquid nitrogen (LN) supply line inside Building 912 is charged with LN, and this line is not isolated from the 11,000-gallon LN tank, then the installed building oxygen

[1] East Experimental Building Addition
[2] Northeast Experimental Building Addition

monitors in EEBA, NEBA and the LVTF[3] must alarm locally if the oxygen concentration falls below 18% (nominal).

Authorized Alternative: Upon discovery that any installed oxygen monitor in EEBA, NEBA, ERL or the LVTF is out of service, then entry into EEBA or NEBA portions of Building 912 is allowed as long as requirement 3.7 is satisfied.

3.7. If any of the ODH monitors in NEBA, EEBA, ERL, or the LVTF sense oxygen concentration at 18% (nominal) or fail to be able to sense oxygen levels, then the air-operated valve at the 11,000 gallon LN tank located outside B912 must automatically close to isolate the LN supply to B912.

Authorized Alternative: Upon discovery that the automatic isolation valve at the LN tank is inoperable, the entire EEBA, NEBA portion of B912 including LVTFand SVTF[4] blockhouses and ERL accelerator enclosure, must be emptied of personnel as soon as practicable. Subsequent entry will only be allowed if the LN tank manual isolation valve is closed.

[3] The LVTF is not part of the ERL or its support system but it has a feature that can create an ODH in the EEBA portion of B912.
[4] Small Vertical Test Facility which is not part of the ERL or its support system but is located in EEBA and can be affected by an ODH condition in EEBA

Section 4: Calibration, Testing, Maintenance and Inspection that Supports Credited Controls

The calibration, testing, maintenance or inspections needed to support Credited Controls are:

4.1. The Access Control System must be functionally tested in accordance with requirements in the BNL Radiation Control Manual.

4.2. Area radiation monitors must undergo annual calibration (not to exceed 15 months).

4.3. If cryogens are charged in the system, the ventilation exhaust fans and associated oxygen monitors used to mitigate an oxygen deficiency event must undergo annual testing (not to exceed 15 months).

4.3.1. The ability of the air-operated valve at the 11,000 gallon LN tank outside B912 to isolate the LN tank if any ODH monitor in ERL, NEBA, EEBA or LVTF indicates less than 18% (nominal) oxygen concentration, or if any ODH sensor fails, must be functionally checked annually (not to exceed 15 months).

4.4. Radiological shielding and barriers (e.g., shield blocks, fencing, etc.) must undergo visual inspection prior to operations to ensure that they are in place and functional.

Section 5: Administrative Controls

Administrative controls provide defense-in-depth to help ensure the operational integrity of the Credited Controls during operations. These administrative controls are:

5.1. Minimum Prototype ERL Control Room Staffing

5.1.1. Prototype ERL Control Room: one qualified Operator and one other person (i.e., ERL Operator-in-Training or ERL Physicist) must be on duty when Prototype ERL beam is in operation. During beam operations, one of the two people must remain in the Prototype ERL Control Room at all times.

Authorized Alternative: If the extra person (i.e., ERL Operator-in-Training or ERL Physicist) is incapacitated, the qualified Trained Operator may continue operations as long as manning requirements are restored within two hours.

5.2. Prototype ERL Modification and Controls

5.2.1. Approved Configuration Control procedures must be used to ensure review of modifications against Credited Controls in ASE requirements.

5.2.2. Each Prototype ERL experiment or re-configuration of accelerator components, if any, must be reviewed by C-AD for Configuration Control and safety before running with beam.

5.2.3. An experiment or reconfiguration of the accelerator may lie dormant for a period greater than one year and not require a review during the dormancy period. For experiments that may run more than once in a 12-month period, review must occur as determined by C-AD management before each scheduled run.

5.2.4. Modifications to the Prototype ERL that are determined to increase the frequency or consequences of known hazards or which introduce new hazards must be documented using the Unreviewed Safety Issue determination (USI) process. If a USI exists, the modification may not be implemented without DOE approval.

5.3. Beam loss induced radiation within uncontrolled areas for credible repeated losses must be less than 100 mrem in a year. C-AD shall use BNL's environmental TLD monitors to check the effectiveness of the C-AD radiation control program.

5.4. ODH area classification must comply with the requirements in the BNL SBMS Subject Area, ODH Classification/Controls.

Department of Energy
Brookhaven Site Office
P.O. Box 5000
Upton, New York 11973

Mr. George A. Goode
Brookhaven Science Associates, LLC
Brookhaven National Laboratory
Upton, New York 11973

SEP 10 2013

Dear Mr. Goode:

SUBJECT: APPROVAL OF THE EXEMPTION REQUEST FOR THE PROTOTYPE ENERGY RECOVERY LINAC (ERL) LOW POWER TESTING

Reference: Letter, from G. Goode, BSA to F. Crescenzo, SC-BHSO, Subject: Request for Approval of the Low Power Testing and Commissioning ASE (CASE) of the Prototype Energy Recovery Linac (ERL) dated June 3, 2013.

The Department of Energy (DOE) Brookhaven Site Office (BHSO) has reviewed your request for an exemption from an Accelerator Readiness Review (ARR) prior to performing the ERL Low Power Testing. Based on our review, the Low Power Test ARR exemption is approved and can commence under the limits established by the CASE and the requirements specified in the Collider-Accelerator Department (CAD) Operations Procedure Manual (OPM) 2.5.6. The low power testing is expected to last for 7 months followed by an ARR to begin commissioning of the full ERL. Please notify this office in writing when the actual low power testing commences, the exemption will expire 7 months from that date. BHSO will be monitoring the progress of the testing and tracking the expiration date of the exemption.

BHSO requires that CAD perform and submit a documented review of the Low Power Testing operations 3 months after its start demonstrating that all controls, engineered and administrative, are in place and functioning as described in the December 4, 2012 Unreviewed Safety Issue analysis of the ERL Low Power Test and CAD OPM 2.5.6.

If you have any questions, please contact Patrick Sullivan, of my staff at extension 4092.

Sincerely,

Frank J. Crescenzo
Site Manager

cc: R. Gordon, SC-BHSO
R. Desmarais, SC-BHSO
P. Sullivan, SC-BHSO
M. Bebon, BSA
C. Conrad, BSA
D. Gibbs, BSA
W. Gunther, BSA
E. Lessard, BSA
B. Mueller, BSA
E. Nowak, BSA
T. Roser, BSA
C. Schaefer, BSA
G. Shepherd, BSA

C-AD Unreviewed Safety Issue (USI) Determination Form

Title of USI Determination: ERL Low Power Test

Description of USI Determination (use attachments): see attachments

Title and Date of Relevant SAD: 2011 C-AD SAD

Associate Chair for ESSHQ or ESSHQ Division Head must initial all applicable determinations and actions. Write N/A for non-applicable. Leave no blanks.

Determinations and Actions	Initial or Indicate N/A
Determination: The current SAD and/or ASE addresses the hazard associated with the proposed work, event or activity.	[ETL]
Determination: This activity does not constitute a USI.	[N/A]
Action: Use this Form, the USI Checklist and attached description, if any, to document the USI Determination until the next revision of the SAD.	[ETL]
Action: Include this USI Determination as a reference on the ESSHQ Division website "Authorization Bases" after approval by the C-AD Associate Chair for ESSHQ.	[ETL]
Determination: The hazard associated with the proposed work is not analyzed or is not correctly bounded in the C-AD SAD and/or it is not controlled by an ASE.	[ETL]
Action: Submit the USI or a revised SAD and/or ASE to the BNL ESH Committee.	[ETL]
Action: Do not perform activity until BNL has approved.	[ETL]
Action: Do not perform activity until DOE has approved.	[ETL]

_____Signature on File_____ _____12-4-12_____
Signature of C-AD ESSHQ Division Head Date

_____Signature on File_____ _____12-4-12____
Signature of C-AD Associate Chair for ESSHQ Date

Exemption Request for Low-Power Testing of ERL SC Gun and 5-Cell Cavity

Introduction

The Collider-Accelerator Department (C-AD) Chairman is requesting the Laboratory ESH Committee (LESHC), the Assistant Laboratory Director for ESH (ALD for ESH) and Head of DOE Area Office (BHSO) approve or recommend for approval, as applicable, a low-power beam test of the ERL. To do these tests, C-AD management requests exemption from paragraph (4).(b) of the DOE Order 420.2C and corresponding SBMS Accelerator Safety Subject Area requirements, and allow the test described below. Specifically, please allow the tests prior to conducting an Accelerator Readiness Review (ARR) for the full ERL accelerator facility. This low power test is needed to optimize the beam to finish construction of the energy-recovery aspects of the accelerator. Systems are undergoing development at this stage. Low-power testing allows the development of operational efficiency. Conducting an ARR at this stage is neither practical nor necessary because of the nature of the hazard and the developmental nature of the low-power beam line. Demonstrating the energy-recovery aspect is necessary to construct a feasible eRHIC. C-AD bases the safety of the exemption request on the limited power and the low-level radiation hazard allowed for the test; that is, this device at this power limit would not likely produce an accessible radiological area.

Background

DOE Order 420.2C, Safety of Accelerator Facilities, Paragraph 3.c.(2) indicates DOE may approve accelerator exemptions, in addition to those examples listed in paragraph 3.c.(1). An exemption would result in not requiring the ERL superconducting gun and 5-cell cavity test to meet the provisions of paragraph 5 of the Order. This opportunity to request an exemption is also in the SBMS Accelerator Safety Subject Area. Such a request requires a review and recommendation for approval by the Laboratory Environmental, Health and Safety Committee (LESHC) and the approval of the BNL ALD for ESH prior to DOE approval.

Low-Power Testing Plan

C-AD will conduct the following low-power tests:

1) Beam out of the gun, and
2) Beam through the 5-cell accelerating cavity.

In both cases, the beam power will be limited to less than 70 watts. The control of the beam power will be done through the setting of the photocathode drive laser, pulse energy and repetition rate.

The photocathodes to be used in these tests are multi-alkali, mostly cesium potassium antimonide. The bunch charges will be less than one nanoCoulomb (nC) with the repetition rate adjusted to maintain the maximum beam power with the given beam energy.

1) The capability of the gun is a maximum beam energy of 3.5 MeV, and
2) The capability of the 5-cell cavity is a maximum beam energy of 25 MeV.

The pulse repetition frequency will be under 2.8 kHz for the maximum charge of 1 nC and maximum energy of 25 MeV. At lower pulse charges, the repetition frequency may be increased accordingly.

In the initial test (1), the diagnostic equipment will be a Faraday Cup (FC), an Integrating Current Transformer (ICT), and beam loss monitors (BLM). See Figure 1.

In the latter test (2), additional diagnostics will be beam position monitors, and beam profile monitors. See Figure 2.

Both tests will have a large array of radiation detectors, ion chambers and photomultiplier tubes (seen in Figures 1 and 2)

C-AD will conduct tests intermittently over a period of seven months after the onset of approved low-power testing. ERL management plans to request an ARR approximately three months (90 days) after the onset of the low-power test.

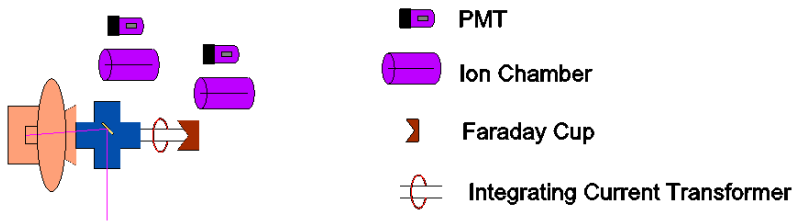

Figure 1 – Initial Test. Gun is on the left.

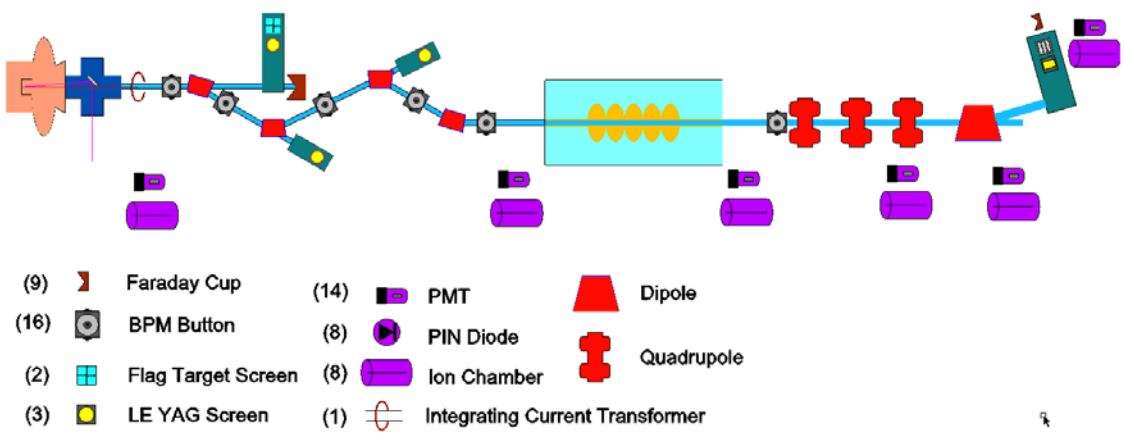

Figure 2 – Later Test

In Figure 2, the dipoles between the gun and the 5-cell cavity bend the beam vertically; that is, either toward the roof or toward the floor. The ERL experimental area sweep checklist addresses this and does not allow access to the roof of the ERL enclosure and access to the Building 912 roof.

Safety Basis for Exemption Request for Low-Power Testing

To test the ERL Superconducting Gun and 5-cell cavity at low power, C-AD management will adhere to an approved ERL Low Power ASE for this specific ERL Superconducting Gun and 5-Cell Cavity Test (see Attachment 1). With exception of Limits for the Maximum Credible Incident, C-AD adopts all Credited Controls and Supports associated with the approved June 6, 2012 ERL ASE, and reproduces them in the ERL Low Power ASE for this test. In the ERL Low Power ASE, C-AD defines a different set of Limits for the Maximum Credible Incident (MCI) in Section 2:

Limits for MCI

2.1. Electron kinetic energy must be limited to 3.5 MeV for the superconducting RF gun.
2.2. The electron beam power leaving the ERL Superconducting Gun or the five-cell cavity must be limited to 70 W averaged over 1 hour.
2.3. Electron kinetic energy limit must be limited to 25 MeV to the dump.

The bases for these MCI-related Limits are that shielding calculations show that a maximum 70 W beam power will allow C-AD to maintain the outside of the ERL enclosure as a Controlled Area under Maximum Credible Incident conditions.

Credited Control to Limit Beam Power during Low-Power Testing

The electron beam power will be limited by using alarming and interlocking radiation monitors around the ERL enclosure. C-AD will place alarming and interlocking radiation monitors outside the enclosure and confirm their appropriate location using fault studies and radiation surveys at the onset of low-power testing. The alarm and interlock set points outside the ERL enclosure will be set such that outside the enclosure, C-AD maintains radiation exposure no greater than that allowed for a Controlled Area in the event of the MCI fault.

Estimated Dose Rate during Low-Power Testing

The ERL enclosure uses bulk shielding and an Access Control System for radiation protection. The enclosure has side walls composed of between four- and eight-feet of light concrete. The thin sections of wall are shadowed from the potential sources with inner shield walls located appropriately. The inner shadow shields subtends all angles for any energy electron-beam bent by dipole magnets, and the roofs of the ERL enclosure and Building 912 are not allowed to be accessed (see RSC Minutes in References Section). The entire enclosure has a single layer of light concrete roof beams four feet thick, except for a transition region where the roof is two layers of beams. This transition region is where the 13 feet ceiling height in the center falls to 9 feet at both ends.

In the ERL configuration in Figure 2, the beam can be mis-steered up or down. A memorandum dated 10-1-2012 by K. Yip to the C-AD Radiation Safety Committee verifies that upwardly mis-steered low-energy beam (3.5 MeV) causes a maximum 7.15 mrem/h at 70 W on the ERL enclosure roof, which has no access, and 0.192 mrem/h at a distance of 20 feet such as the Building 912 roof. The beam would have to bend around the magnets and internal shielding

and then directly hit the 4-foot thick concrete ERL enclosure wall for these fault dose-rates to occur. C-AD appended this calculation to the 2011 C-AD SAD in the ERL USI for Low Power Testing.

In order to determine the effectiveness of the shielding at ERL, the maximum sustained beam loss assumed in the safety analyses section, Chapter 4, of the 2011 C-AD SAD was 1.2 MW for 3.5 MeV injection electrons. In Table 4.13.b. from the C-AD SAD, the experts who did the shield safety analyses assumed that credible sustainable beam losses were 1 W of electron beam at beam injection energy of 3.5 MeV and 60 kW at 25 MeV. The C-AD SAD shielding experts listed estimates of absorbed dose rates at the outside surface of the ERL's shielding for these assumed losses. Their Table in the C-AD SAD is as follows:

Table 4.13.b Dose Outside Prototype ERL Enclosure for 3.5- and 25-MeV Electrons

Condition	Instantaneous Dose Rate From Maximum Beam Loss[a]	Dose Rate From Sustainable Loss[b]	Dose From Sustainable Loss Assuming Interlock Occurs[d]
3.5MeV@ 0 degrees, γ	88,000 mrad/h	0.073 mrad/h	0.0002 mrad
3.5MeV@ 90 degrees, γ	18,000 mrad/h	0.015 mrad/h	0.00004 mrad
25 MeV@ 0 degrees, γ	65,000 mrad/h[c]	4000 mrad/h[c]	10 mrad[c]
25 MeV @ 90 degrees, γ	13,000 mrad/h	800 mrad/h	2.0 mrad
25 MeV neutrons	120 mrem/h	6.0 mrem/h	0.015 mrem

[a] The maximum instantaneous beam loss is 1.2 MW at 3.5 MeV, and 10 MW at 25 MeV, which would terminate after a small fraction of a second.
[b] The sustainable loss is 1 W for 3.5 MeV, and 60 kW for 25 MeV electrons is assumed.
[c] The forward-direction gamma-dose rates were reduced by a factor of 0.005 by the adding 2-feet of heavy concrete in the electron ring.
[d] As with all C-AD interlocking area-dose-rate monitors, a 9-second delay from sensing the trip point's dose rate to stopping of beam is conservatively assumed in SAD analyses.

Using columns 3 and 4 from Table 4.13.b, 0-degree beam, and assuming 70 W maximum sustained beam loss with alarming radiation monitors, then C-AD estimates the maximum sustainable dose rate outside the ERL enclosure at about 5 mrad/h (70 W x 0.073 mrad/h-W). Since C-AD will use both alarming and interlocking radiation monitors, the beam will shut within 9 seconds after reaching a set point of 2.5 mrem/h, and a maximum a 0.014 mrad absorbed-dose is expected (70 W x 0.0002 mrad/W) in such a fault. Because of an additional 2 feet of heavy concrete, 70 W also results in 5 mrad/h and about 0.014 mrad absorbed-dose in a fault with 25 MeV beam. Based on these estimates of absorbed dose in a fault, C-AD concludes no need for a Radiation Area in accessible locations adjacent to the ERL enclosure, and a Controlled Area will suffice for the test. This maximum radiological consequence is the safety basis for the exemption request from requirements in Section 5 of DOE O 420.2C for this specific low-power beam test. This level of hazard produces only local work area impacts and can be safely managed under the provisions of Title 10, Code of Federal Regulations (CFR), Part 835 and Part 851.

Specific Assurance Methods for Low-Power Testing

C-AD management has employed the following assurance methods specific to this test:

1) The C-AD RSC has reviewed the use of alarming and interlocking radiation monitors for this proposed low-power beam test,
2) The C-AD RSC will inspect the ERL enclosure shielding prior to testing with low power beam to ensure all inner shields intercept all possible beam energies and beam-bending by dipole magnets,
3) The C-AD RSC will inspect and approve the locations of alarming and interlocking radiation area monitors inside and outside the ERL enclosure,
4) The C-AD RSC will prepare a Radiation Safety Check-off list for the low-power tests that ensures the ERL access control system is operational, that alarming and interlocking radiation monitors are in place, and that shielding is in place,
5) Qualified operators and the engineered-safety-system owners must sign the Radiation Safety Check-off list prior to enabling beam,
6) The ERL Operations Coordinator will qualify each operator to respond to alarming and interlocking Chipmunk radiation monitors by observing their performance when executing the procedure,
7) The ERL Operations Coordinator will qualify each operator and other staff approved by ERL management to perform sweeps to enable the ERL enclosure for beam by observing their performance in executing the sweep procedure,
8) One qualified ERL operator is required to be present during any period of testing with low-power electron beam,
9) A qualified ERL operator is required to monitor and log beam energy and beam power at the beginning and end of each day of low-power beam tests,
10) The C-AD FS Representative will schedule radiation surveys near the external penetrations to the ERL enclosure and for the general areas outside the ERL enclosure during a test; additional surveys will be performed for several testing configurations that are within the specified MCI Limits (i.e., lower pulse charge and greater repetition frequency),
11) The Chair of the Radiation Safety Committee and the Head of the ESSHQ Division will review radiological surveys and e-log radiation monitor data with the FS Representative at the end of each day of low-power beam tests.
12) The ERL Operations Coordinator will re-sign the RSC checklist if more that 7 days elapses between sequential low-power beam tests after checking that other signatures on the list remain valid.
13) C-AD will place these requirements and the 70 W power limit into C-A OPM 2.5.6 during the period the exemption is in effect and before low-power testing is started.

Request for DOE O 420.2C Exemption in Order to Perform Low-Power Testing

C-AD management requests a seven-month exemption from paragraph (4).(b) of the DOE Order 420.2C and corresponding SBMS Accelerator Safety Subject Area requirements to allow testing of the ERL superconducting gun and 5-cell cavity at low power. Specifically, C-AD management requests low-power tests be allowed prior to conducting an Accelerator Readiness Review (ARR) for the full ERL accelerator facility and permission to commission. C-AD bases

the safety of the exemption request on the limited power, limited duration and the low-level radiation hazard allowed for the test, the review by the Radiation Safety Committee, the use of qualified operators, the implementation of alarming and interlocking radiation monitors, and daily oversight by C-AD managers.

References

June 6, 2012 ERL ASE

LESHC Minutes 12-04; password oper8

LESHC Minutes 11-10; password oper8

LESHC Minutes 11-04; password oper8

LESHC Minutes 08-13; password oper8

RSC Minutes Issued: November 11, 2012

RSC Minutes Issued: October 17, 2012

LESHC Minutes 13-02; password oper8

Attachments

Attachment 1, Commissioning Accelerator Safety Envelope for Low Power Test

Commissioning Accelerator Safety Envelope for Low Power Test

Title of Facility: Prototype Energy Recovery Linac (ERL)

Date of Initial CASE: 4-25-2013

Subsequent Revision Dates:

Signature of Preparer:

Edward T Lessard

Signature of Collider-Accelerator Associate Chair for Accelerator R&D:

Ilan Ben-Zvi

Signature of Collider-Accelerator Department Chair:

Thomas Roser

Signature of Nuclear and Particle Physics Associate Laboratory Director:

David Lissauer 4/30/13

Signature of BNL Assistant Laboratory Director for Environment, Safety and Health:

Mark Mirabelli 6/3/13

Section 1: Introduction

This CASE defines the Prototype ERL ASE Credited Controls and their Supports that are unique to accelerators necessary to ensure safe operations and to ensure that the potential accelerator-related risks to the public, workers and environment are minimized. Other legal and DOE Order requirements not unique to accelerators are implemented via compliance with the BNL Standards Based Management System (SBMS) Subject Areas.

1.1. The method used by the Collider-Accelerator Department (C-AD) for change control of this CASE is described in the BNL Subject Area on Accelerator Safety.

1.2. A variation away from the Credited Controls and their Supports, which are described in Sections 2, 3, and 4 of this ASE, must be treated as a violation of the ASE and must be a reportable occurrence, as defined by the BNL SBMS Subject Area on Occurrence Reporting. A violation is defined as not satisfying a Credited Control, its Supports or its Authorized Alternative. C-AD staff must make notifications of occurrences according to the requirements in the C-AD Operations Procedure Manual.

1.3. Section 5, Administrative Controls, are not Credited Controls but provide defense-in-depth that supports compliance with the requirements in Sections 2 through 4. A violation of Section 5 requirements will be evaluated by management to determine if a reportable occurrence is needed.

1.4. If a Credited Control or its Supports are not satisfied and it has a specific Authorized Alternative, then take immediate actions to implement the Authorized Alternative or stop the activity that uses the affected equipment as soon as practicable.

1.5. If a Credited Control Requirement or its Supports have no specific Authorized Alternative and is not satisfied, then stop the activity that uses the affected Credited Control as soon as practicable.

1.6. Emergency actions may be taken that depart from a Credited Control or its Supports when no actions consistent with the Credited Control are immediately apparent and when these actions are needed to protect the public, worker and environmental safety. These emergency actions must be approved by the person in charge of facility safety, as defined in the operating procedures, when the emergency occurs and must be reported to C-AD management within 2-hours.

Section 2: Credited Controls

This section contains the Credited Controls that limit accelerator operations in order to protect the environment, workers, and the public by ensuring that those operations are conducted within the assumptions in the approved C-AD SAD. Credited Controls for Prototype ERL operations are:

Credited Controls for Maximum Credible Incident

The following limits are the maximum beam energy and beam power that the Prototype ERL is capable of. These Credited Controls cannot be exceeded without changing the structures, systems and components (SSC) of the Prototype ERL. Changing Prototype ERL SSC requires authorization by C-AD management.

2.1. Electron kinetic energy must be limited to 3.5 MeV for the superconducting RF gun.

2.2. The electron beam power leaving the ERL Superconducting Gun or the five-cell cavity must be limited to 70 W averaged over 1 hour.

2.3. Electron kinetic energy limit must be limited to 25 MeV to the dump.

Credited Control for Radiation Hazard Due to Access

2.4. During beam operations, an access control system (ACS) must prevent access to beam.

Credited Control for Oxygen Deficiency Hazard (ODH)

2.5. Engineered systems (interlocks and alarms) must be in place to minimize the likelihood of injury/illness from a release of inert gas.

Section 3: Credited Control Supports

This section identifies the measurable limitations on Supports for Credited Controls that ensure that Prototype ERL operations do not exceed the Credited Controls in Section 2. These Credited Control Supports are derived from the safety analyses described in the approved C-AD SAD. They are:

Credited Control Supports to Protect against Radiation

3.1. Before beam or other radiation producing operations (e.g. electron gun or 5-cell cavity operations and testing), Prototype ERL enclosures must have all shielding properly in place and configuration controlled.

3.2. During beam or other radiation producing operations (e.g. electron gun or 5-cell cavity operations and testing), the ERL ACS must be functional. This means that the portions of the ACS that prevent exposure to beam radiation or RF generated x-rays inside enclosures and that remove beam or turn off RF when excessive beam loss or x-ray radiation occurs are functional.

3.3. During the beam or other radiation producing operations, area radiation monitors that are interfaced with the ERL ACS to remove beam when excessive beam loss is sensed must be within their calibration date.

3.4. During beam or other radiation producing operations, the locations of area radiation monitors interfaced with the ERL ACS must be configuration controlled.

Credited Control Supports to Protect against an ODH in ERL Accelerator Enclosure, Compressor/Vacuum/Water Building, and the EEBA[1] and NEBA[2] Portions of B912

3.5. When cryogens are charged in the system, exhaust fans and the ODH portion of the ERL ACS must be operable, that is, when the oxygen concentration falls below 18% (nominal) in either the ERL accelerator enclosure or the ERL Compressor/Vacuum/Water Building the associated ODH fan must turn on.

Authorized Alternative: Upon discovery that either exhaust fan is not operable or the ODH portion of the ERL ACS is out of service, entry to the affected building (i.e., ERL accelerator enclosure or ERL Compressor/Vacuum/Water building) is allowed if each entrant has their own 5-minute escape pack (or a self-contained breathing apparatus) and a portable oxygen monitor.

3.6. If the liquid nitrogen (LN) supply line inside Building 912 is charged with LN, and this line is not isolated from the 11,000-gallon LN tank, then the installed building oxygen

[1] East Experimental Building Addition
[2] Northeast Experimental Building Addition

monitors in EEBA, NEBA and the LVTF[3] must alarm locally if the oxygen concentration falls below 18% (nominal).

Authorized Alternative: Upon discovery that any installed oxygen monitor in EEBA, NEBA, ERL or the LVTF is out of service, then entry into EEBA or NEBA portions of Building 912 is allowed as long as requirement 3.7 is satisfied.

3.7. If any of the ODH monitors in NEBA, EEBA, ERL, or the LVTF sense oxygen concentration at 18% (nominal) or fail to be able to sense oxygen levels, then the air-operated valve at the 11,000 gallon LN tank located outside B912 must automatically close to isolate the LN supply to B912.

Authorized Alternative: Upon discovery that the automatic isolation valve at the LN tank is inoperable, the entire EEBA, NEBA portion of B912 including LVTFand SVTF[4] blockhouses and ERL accelerator enclosure, must be emptied of personnel as soon as practicable. Subsequent entry will only be allowed if the LN tank manual isolation valve is closed.

[3] The LVTF is not part of the ERL or its support system but it has a feature that can create an ODH in the EEBA portion of B912.
[4] Small Vertical Test Facility which is not part of the ERL or its support system but is located in EEBA and can be affected by an ODH condition in EEBA

Section 4: Calibration, Testing, Maintenance and Inspection that Supports Credited Controls

The calibration, testing, maintenance or inspections needed to support Credited Controls are:

4.1. The Access Control System must be functionally tested in accordance with requirements in the BNL Radiation Control Manual.

4.2. Area radiation monitors must undergo annual calibration (not to exceed 15 months).

4.3. If cryogens are charged in the system, the ventilation exhaust fans and associated oxygen monitors used to mitigate an oxygen deficiency event must undergo annual testing (not to exceed 15 months).

4.3.1. The ability of the air-operated valve at the 11,000 gallon LN tank outside B912 to isolate the LN tank if any ODH monitor in ERL, NEBA, EEBA or LVTF indicates less than 18% (nominal) oxygen concentration, or if any ODH sensor fails, must be functionally checked annually (not to exceed 15 months).

4.4. Radiological shielding and barriers (e.g., shield blocks, fencing, etc.) must undergo visual inspection prior to operations to ensure that they are in place and functional.

Section 5: Administrative Controls

Administrative controls provide defense-in-depth to help ensure the operational integrity of the Credited Controls during operations. These administrative controls are:

5.1. Minimum Prototype ERL Control Room Staffing

5.1.1. Prototype ERL Control Room: one qualified Operator and one other person (i.e., ERL Operator-in-Training or ERL Physicist) must be on duty when Prototype ERL beam is in operation. During beam operations, one of the two people must remain in the Prototype ERL Control Room at all times.

Authorized Alternative: If the extra person (i.e., ERL Operator-in-Training or ERL Physicist) is incapacitated, the qualified Trained Operator may continue operations as long as manning requirements are restored within two hours.

5.2. Prototype ERL Modification and Controls

5.2.1. Approved Configuration Control procedures must be used to ensure review of modifications against Credited Controls in ASE requirements.

5.2.2. Each Prototype ERL experiment or re-configuration of accelerator components, if any, must be reviewed by C-AD for Configuration Control and safety before running with beam.

5.2.3. An experiment or reconfiguration of the accelerator may lie dormant for a period greater than one year and not require a review during the dormancy period. For experiments that may run more than once in a 12-month period, review must occur as determined by C-AD management before each scheduled run.

5.2.4. Modifications to the Prototype ERL that are determined to increase the frequency or consequences of known hazards or which introduce new hazards must be documented using the Unreviewed Safety Issue determination (USI) process. If a USI exists, the modification may not be implemented without DOE approval.

5.3. Beam loss induced radiation within uncontrolled areas for credible repeated losses must be less than 100 mrem in a year. C-AD shall use BNL's environmental TLD monitors to check the effectiveness of the C-AD radiation control program.

5.4. ODH area classification must comply with the requirements in the BNL SBMS Subject Area, ODH Classification/Controls.

Department of Energy
Brookhaven Site Office
P.O. Box 5000
Upton, New York 11973

Mr. George A. Goode
Brookhaven Science Associates, LLC
Brookhaven National Laboratory
Upton, New York 11973

SEP 10 2013

Dear Mr. Goode:

SUBJECT: APPROVAL OF THE EXEMPTION REQUEST FOR THE PROTOTYPE ENERGY RECOVERY LINAC (ERL) LOW POWER TESTING

Reference: Letter, from G. Goode, BSA to F. Crescenzo, SC-BHSO, Subject: Request for Approval of the Low Power Testing and Commissioning ASE (CASE) of the Prototype Energy Recovery Linac (ERL) dated June 3, 2013.

The Department of Energy (DOE) Brookhaven Site Office (BHSO) has reviewed your request for an exemption from an Accelerator Readiness Review (ARR) prior to performing the ERL Low Power Testing. Based on our review, the Low Power Test ARR exemption is approved and can commence under the limits established by the CASE and the requirements specified in the Collider-Accelerator Department (CAD) Operations Procedure Manual (OPM) 2.5.6. The low power testing is expected to last for 7 months followed by an ARR to begin commissioning of the full ERL. Please notify this office in writing when the actual low power testing commences, the exemption will expire 7 months from that date. BHSO will be monitoring the progress of the testing and tracking the expiration date of the exemption.

BHSO requires that CAD perform and submit a documented review of the Low Power Testing operations 3 months after its start demonstrating that all controls, engineered and administrative, are in place and functioning as described in the December 4, 2012 Unreviewed Safety Issue analysis of the ERL Low Power Test and CAD OPM 2.5.6.

If you have any questions, please contact Patrick Sullivan, of my staff at extension 4092.

Sincerely,

Frank J. Crescenzo
Site Manager

cc: R. Gordon, SC-BHSO
R. Desmarais, SC-BHSO
P. Sullivan, SC-BHSO
M. Bebon, BSA
C. Conrad, BSA
D. Gibbs, BSA
W. Gunther, BSA
E. Lessard, BSA
B. Mueller, BSA
E. Nowak, BSA
T. Roser, BSA
C. Schaefer, BSA
G. Shepherd, BSA

Prototype ERL in Building 912

Accelerator Readiness Plan

Collider-Accelerator Department

5-1-12

Table of Contents

Introduction.....3
Modular Readiness Schedule.....3
Brief Description of Facilities.....4
Authorization Documents.....6
Conduct of Operations.....6
Training.....8
Commissioning / Operating Modules, Activities and Persons Responsible.....9
List of Contacts for Additional Information.....10
List of Procedures (Contacts).....11
List of Prior Reviews (Contacts).....11
Responsibility Matrix.....12

Introduction

This accelerator readiness plan describes the necessary activities completed by the Collider-Accelerator Department (C-AD) before commencing the Prototype Energy Recovery Linac (ERL) commissioning. This plan addresses safety and environmental protection and ensures that the C-AD avoids unsafe or environmentally unsound commissioning. The Plan helps C-AD prepare for an appropriate Accelerator Readiness Review (ARR), as required in DOE Order O 420.2C. The ARR itself follows a declaration by C-AD management that the ERL is ready to commence commissioning activities, and the declaration is expected to occur in September 2012.

Modular Readiness Schedule

Table 1 provides the separate Phases needed for safe and reliable commissioning and subsequent operations. A brief description of the ERL accelerating and decelerating processes are

- A photo-cathode RF gun creates an electron beam
- At the exit of the gun, the electron energy is about 2.5 MeV
- The beam is injected into a superconducting RF 5-cell cavity, and accelerated up to 20 MeV
- The beam is then passed through a "ring" and again enters the RF cavity
- The beam passes into the RF cavity with a 180-degree phase shift relative to the accelerating phase of the cavity, and therefore, the beam is decelerated
- With the beam's energy reduced to that for electron-gun injection (2.5 MeV), a dipole magnet deflects the circulating beam into the beam dump

Table 1, ERL Commission / Operations Phases

Commissioning Module Phase	Devices Operating with Beam	Date Set for Commencement of Commissioning	Maximum Beam Energy, MeV
Phase 1	Electron Gun, 5-Cell Cavity, Faraday Cup Beam Stop	September, 30, 2012	2.5 MeV
Phase 2	Electron Gun, 5-Cell Cavity, Beam Dump, Electron Ring, Extraction Magnet, Beam Dump	Within 3 Months of Phase 1	20 MeV

C-AD will use Phase 1 to check performance parameters associated with the electron gun and 5-cell cavity. It will involve low intensity electron beam and the beam stop will be either a Faraday Cup or the beam dump if the dump is installed. The potential to combine Phase 1 and Phase 2 exists, and C-AD will update and re-issue the Accelerator Readiness Plan if this is the case.

Brief Description of Facilities

Figure 1 shows the major components and layout of the ERL in Building 912. The Prototype ERL has

- a shielded enclosure
- an Access Control System for radiation protection and ODH protection
- a shielded beam dump
- an electron gun
- a 5-cell RF accelerating cavity
- multiple focusing and bending magnets
- a klystron
- a laser
- power supplies for RF systems and magnets
- cryostats for the 5 cell and e-gun superconducting cavities
- pressurized helium piping
- pressurized nitrogen supply and piping
- a helium compressor and supply facility
- a Control Room

When commissioned as an accelerator, ERL is subject to the requirements of the DOE Accelerator Safety Order, DOE O 420.2C or its successors. ERL is a low-hazard facility with potential for no more than minor on-site and negligible off-site impacts to people and the environment. The possibility of any off-site impacts or major on-site impacts is highly unlikely due to the physical aspects of the ERL whereby it is dependent upon an external energy source; that is, electric power that can be easily terminated.

The Prototype ERL has two non-standard industrial hazards. C-AD confines the radiation hazard, which is a non-standard industrial hazard, to the beam pipe or immediate surroundings within shielded enclosures. Ionizing radiation is in existence only when electron beam is present in the accelerator or when the klystron is powered. When accessible, C-AD categorizes these areas as Controlled Areas, TLD Required. The other non-standard industrial hazard is the potential for an oxygen deficiency hazard (ODH), which results from the size of the accelerator enclosure and the volume of liquid helium in use. C-AD categorized the enclosure as ODH 0. C-AD uses low-oxygen-concentration alarms and interlocked ventilation fans for detection and protection, respectively. Other hazards at Prototype ERL are standard industrial hazards such as electrical and cryogen handling, which were determined to be low risk due to the controls required by BNL's SBMS.

During commissioning, C-AD requires routine radiation surveys by qualified Radiological Control Technicians using portable radiation monitors to verify the soundness of radiation-protection controls on a regular basis. C-AD designed the ERL shielding such that exposure to workers in Controlled Areas and uncontrolled areas is less than the annual limits, which are 100 mrem and 25 mrem, respectively.

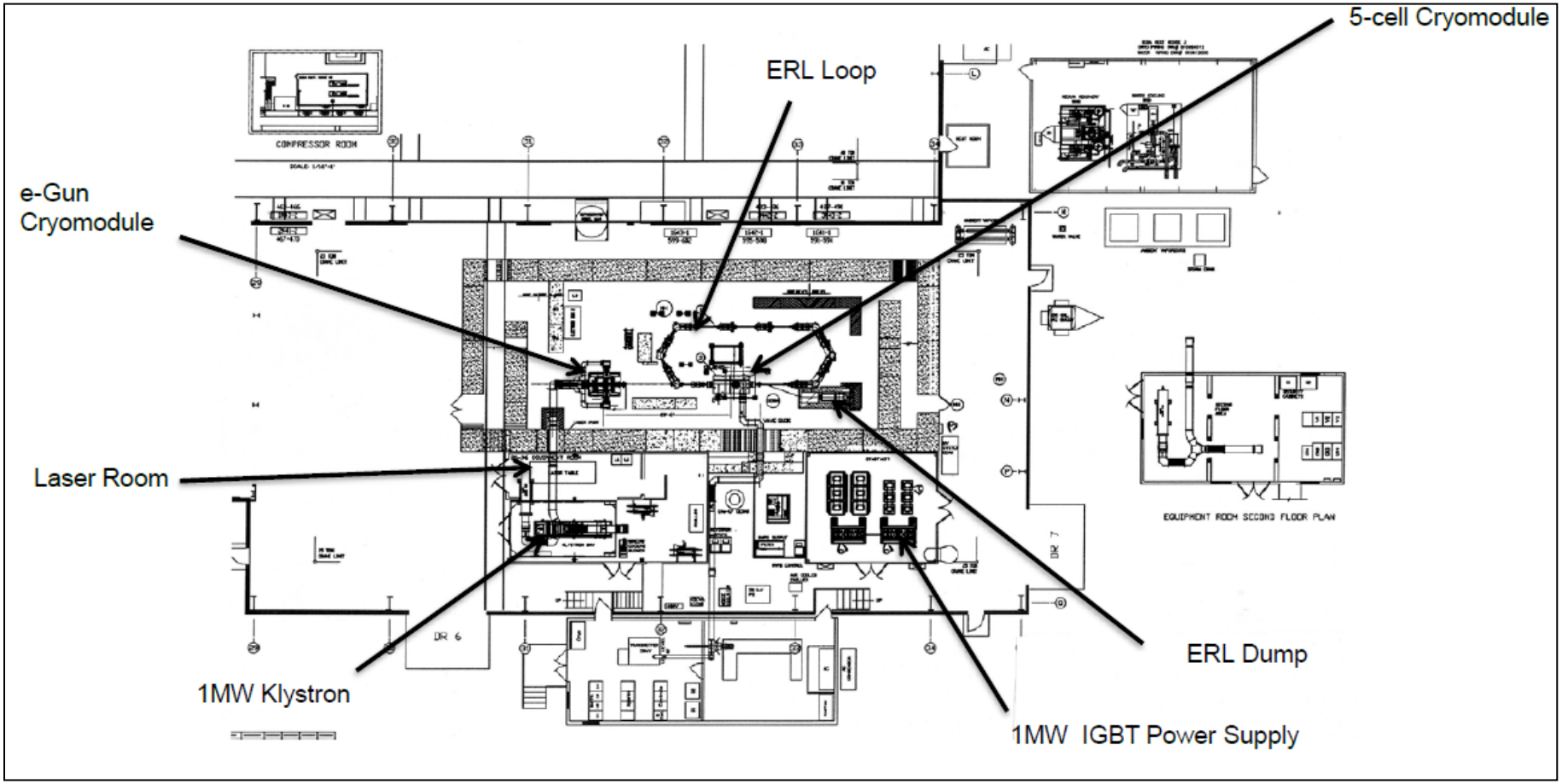

Figure 1, ERL General Layout Inside Building 912

The following subsystems that make up the ERL in Building 912 are available for the accelerator readiness review according to Phase:

- Superconducting Electron Injector, Phase 1
- Injector System Including Laser, Phase 1
- Superconductiong 5 Cell RF Cavity, Phase 1
- Cryogenic System for Electron Gun, Phase 1
- Cryogenic System for 5-Cell RF Cavity, Phase 1
- Beam Diagnostics and Instrumentation to the Faraday Cup, Phase 1
- Controls System, Phase 1
- Access Control System, Phase 1
- RF Power Systems, Phase 1
- Vacuum Systems, Phase 1
- Water Cooling Systems, Phase 1
- ODH Interlock and Ventilation Systems, Phase 1
- Beam Diagnostics and Instrumentation to the Dump, Phase 2
- Electron Beam Dump System, Phase 2
- Ring Magnet Systems, Phase 2
- Ring Magnet Electrical Systems, Phase 2

The minimum accelerator readiness procedures and/or policies for verification by the ARR include:

- Operations startup
- Normal operation
- Emergency conditions
- Access Control System testing
- Sweep Procedures for the accelerator enclosure
- Conduct of maintenance
- Approval and conduct of experiments or accelerator modifications
- Review and approval of facility modifications
- Configuration management of safety-related changes
- Control of facility access
- ASE OPM procedure

Authorization Documents

Hyperlinks to authorization documents:

- Archival ERL Documents related to ESH
- C-AD Safety Assessment Document
- ERL Accelerator Safety Envelope

Conduct of Operations

ERL staff report problems encountered during commissioning (e.g., operational, safety, scheduling problems) to the ERL Operations Supervisor, and the MCR Operation Coordinator if C-AD is operating other accelerators at that time.

DOE authorizes the start of commissioning and the C-AD Department Chair will notify the ERL Operations Supervisor after authorization is given. Anticipated commissioning activities requiring C-AD line authorizations are

- Starting-up or restarting systems
- Performing corrective maintenance on systems
- Producing or removing existing procedures
- Approving temporary procedures
- Signing-off changes to procedures
- Work planning and control
- Authorizing changes to equipment
- Assuring systems are in proper alignment
- Assuring compliance with ASE limits
- Assuring proper status information on control panels and alarms
- Documenting equipment deficiencies
- Documenting maintenance activities
- Assuring operational tests are performed following maintenance or modifications
- Controlling temporary modifications
- Assuring a document control system is in place

C-AD uses OPM 2.28, Work Planning and Control for Operations for work planning. For ERL commissioning procedures, the C-AD procedures systems is used, see OPM 1.4 series. Specific ERL procedures are in OPM Chapter 18. Off-normal events will be reported through the C-AD Critique Procedure, OPM 9.4.6, or through OPM 10.1, Occurrence Reporting. C-AD will assure ERL modifications are within ASE limits through the USI Determination Procedure, OPM 1.10.1.

Training

Aside from mission related operations activities, C-AD trains ERL operators and staff in the following

- ERL safety analysis
- ERL facility access
- Responsibility for ERL Credited Controls
- Assuring ERL Credited Controls are implemented
- Assuring testing and surveillances associated with safety systems are completed
- Operator response to ODH and radiation alarms
- Human performance techniques

Contact John Maraviglia for names of personnel and training records. BNL qualifications include electrical safety, cryogenic safety, and facility access. C-AD performed Job Training Assessments for the following ERL commissioning positions

- ERL Subsystem Experts
- ERL Operations Supervisor
- ERL Operators
- MCR Operations Coordinator (if other C-AD accelerators are operating)
- ERL Radiological Control Technician
- Collider-Accelerator Support Watch
- Cryogenic Systems Operator

Commissioning / Operating Modules, Activities and Persons Responsible

Phase 1

Schedule: ERL commissions the injector system with low-energy low intensity electron beam stopped on a Faraday Cup on or about September 30, 2012.
Description: The intent of the Phase 1 test is to test low-power beam. The following are to be commissioned: • Electron gun RF system with beam • 5-Cell Cavity RF system with beam • Full operation of the laser
Commissioning topics (Person Responsible): • All related ARR pre-start items closed out (D. Kayran) • Access Control System is operable and tested (J. Reich) • Emergency procedures for Phase 1 are complete (I. Ben-Zvi) • Low intensity commissioning procedures are complete (D. Kayran) • Fault Study Plan prepared (D. Kayran) • Safety Check-Off List(s) signed (RSC – D. Beavis; ASSRC – D. Raparia) • All prior safety review committee action items are closed out (D. Pate) • Accelerator Safety Envelope (ASE) approved (E. Lessard) • ASE procedure complete (R. Karol) • Training records complete (J. Maraviglia)

Phase 2

Schedule: ERL operates the accelerator and beam dump at full power.
Description: The intent of the Phase 2 test is to operate at full power with interlocks and other necessary credited controls in place. The following are to be operated: • 5 cell cavity at full power • Extraction magnet is powered • Beam dump at full power • ERL ring is powered
Operations topics (Person Responsible): • All related ARR items are closed out (D. Kayran) • Access Control System is operable (J. Reich) • Emergency procedures updated and complete (I. Ben-Zvi) • Operating procedures complete (D. Kayran) • Fault Study Plan prepared (D. Kayran) • Safety Check-Off List(s) signed (RSC – D. Beavis; ASSRC – D. Raparia) • All prior safety review committee action items closed out (I. Ben-Zvi) • Training records complete (J. Maraviglia)

List of Contacts for Additional Information

Ionizing and Non-Ionizing Radiation Hazards (C-AD Contact)

- RF cavities reviewed for X-ray hazards (D. Beavis, K. Yip)
- Electron beam radiation hazards and shielding (D. Beavis, K. Yip)
- RF shielding and interlocks (A. Zaltsman, P. Cirnigliaro)
- Configuration controlled drawings (J. Tuozzolo)

Laser Systems

- Design reviewed for laser hazards (B. Sheehy, A. Etkin)
- Laser shielding and interlocks (B. Sheehy, A. Etkin)
- Laser operating procedure (B. Sheehy, A. Etkin)

Cryogenic Systems (C-AD Contact)

- Design reviewed for stresses, trapped volumes and reliefs (R. Than, D. Lederle)
- Compliance with ASME Pressure Vessel Code or official equivalence (R. Than, G. McIntyre)
- Compliance with ODH Subject Area (R. Than, R. Karol)
- Vent pipe used to exhaust helium from building (R. Than)
- Burst disks and relief valves (R. Than)
- Configuration controlled drawings (J. Tuozzolo)

Vacuum Systems (C-AD Contact)

- Design reviewed for backfill pressurization (G. McIntyre)
- ASME certified burst disks or pressure reliefs used where appropriate (R. Todd)

Magnet and Magnet Electrical Systems (C-AD Contact)

- Design reviewed for electrical safety (G. Mahler, R. Lambiase)
- Ground-fault monitoring and alarm system (R. Lambiase)
- Equipment and cable tray grounds (R. Lambiase, D. Philips)
- Enclosures or barriers over conductors (R. Lambiase, D. Philips)
- Magnetic field barriers (P. Cirnigliaro)

Beam Instrumentation (C-AD Contact)

- NRTL or equivalent rated equipment (J. Sandberg)
- LOTO (facility, D. Pate; electrical power, R. Lambiase, RF systems, A. Zaltsman)

Controls System (C-AD Contact)

- NRTL or equivalent rated equipment (J. Sandberg)
- Accelerator Controls (J. Jamilkowski)

Conventional Facilities (C-AD Contact)

- Certified hoists, cranes and rigging equipment (M. VanEssendelft)
- Review of structures supporting heavy loads (D. Phillips)
- Review of structural changes to building (D. Phillips)
- Heat detection, smoke detection, automatic sprinklers and fire alarm systems (D. Phillips)
- Configuration controlled drawings (D. Phillips)
- IFM North FPM (W. Hulse)

Engineered Safety Systems

- Gate and alarm system logic (J. Reich)
- Review of critical devices (D. Beavis)
- Testing procedures (J. Reich)
- Configuration controlled drawings (J. Reich)

Water-Cooled Systems (C-AD Contact)

- Compliance with ASME Piping Codes (J. Scaduto)
- Cooling-water level monitoring and alarms (J. Scaduto)
- Configuration controlled drawings (J. Scaduto)

List of Procedures (Contacts)

- Operational Safety Limits /Accelerator Safety Envelope Procedures, OPM Chapter 2 (R. Karol)
- Configuration Management, OPM Chapter 13 (D. Passarello)
- Lock-Out Tag-Out Procedures for ERL, OPM Chapter 18 (T. Seda)
- ERL Local Emergency Procedure, OPM Chapter 3 (M. VanEssendelft)
- Emergency Call-Down Lists for ERL, OPM Chapter 18 (I. Ben-Zvi)
- Operating the ERL Cryogenic Systems, OPM Chapter 7 (R. Than)
- Injecting, Accelerating, Circulating and Dumping ERL Electron Beam, OPM Chapter 18 (D. Kayran)
- Operating the ERL Laser, OPM Chapter 18 (B. Sheehy)
- Operating the ERL Access Control System, OPM Chapter 4 (J. Reich)
- ERL Shutdown Procedure, OPM Chapter 18 (D. Kayran)

List of Prior Reviews (Contacts)

- Tier 1 Inspections (M. VanEssendelft)
- ASSRC Minutes (R. Karol)
- RSC Minutes (D. Beavis)

Responsibility Matrix

Person Responsible	Training Records	Fault Study Plan	Emergency Procedures	Commissioning Procedures	Accelerator Operating Procedures	Cryogenic System Operating Procedures	RSC Check-off List	Closeout of ASSRC Action Items	Sweep Procedures	ASE procedure	Access Control System Tests	Radiological Area Posting	LOTO Procedures	Closeout of ARR Pre-Start Action Items	Closeout of ARR Post-Start Action Items	USI Procedure
J. Maraviglia	X															
D. Beavis		X														
I. Ben-Zvi			X													
D. Kayran				X												
D. Kayran					X											
R. Than						X										
D. Beavis							X									
D. Pate								X								
D. Pate									X							
R. Karol										X						
J. Reich											X					
P. Bergh												X				
T. Seda													X			
I. Ben-Zvi														X		
I. Ben-Zvi															X	
R. Karol																X

ERL Commissioning Plan

1.0 Introduction

The purpose of this document is to outline the sequence of operation conditions during commissioning of 704 MHz SRF Gun, which is 1) no electron beam and laser off at ERL block house along with conducting necessary radiation and RF studies prior to moving to the next step of ERL commissioning, which is 2) "first beam from the gun test". This plan also describes the road map to commissioning full power ERL.

ERL Description

An ampere class 20 MeV superconducting Energy Recovery Linac (ERL) (Fig.1) is under construction at Brookhaven National Laboratory (BNL) for testing of concepts relevant for high-energy coherent electron cooling and electron-ion colliders. One of the goals is to demonstrate an electron beam with high charge per bunch (~5 nC) and low normalized emittance (~5 mm-mrad) at an energy of 20 MeV. A second goal is to demonstrate stable continuous operation for very high average-current of about 0.3 A. The flexible lattice of the ERL loop provides a test-bed for investigating issues of transverse and longitudinal instabilities, and diagnostics for intense CW e-beam. The ERL facility includes several major components: cryogenic system, SRF gun, SRF linac, laser, beam instrumentation, vacuum system, magnets and magnet power supplies, and a control system. The commissioners will start with a SRF gun test and follow with a gun-5 cell cavity-beam stop test in order to complete the initial SRF Gun performance studies. Later, commissioners will install the loop magnets, beam instrumentation and vacuum components to complete the full ERL operations configuration and commissioning.

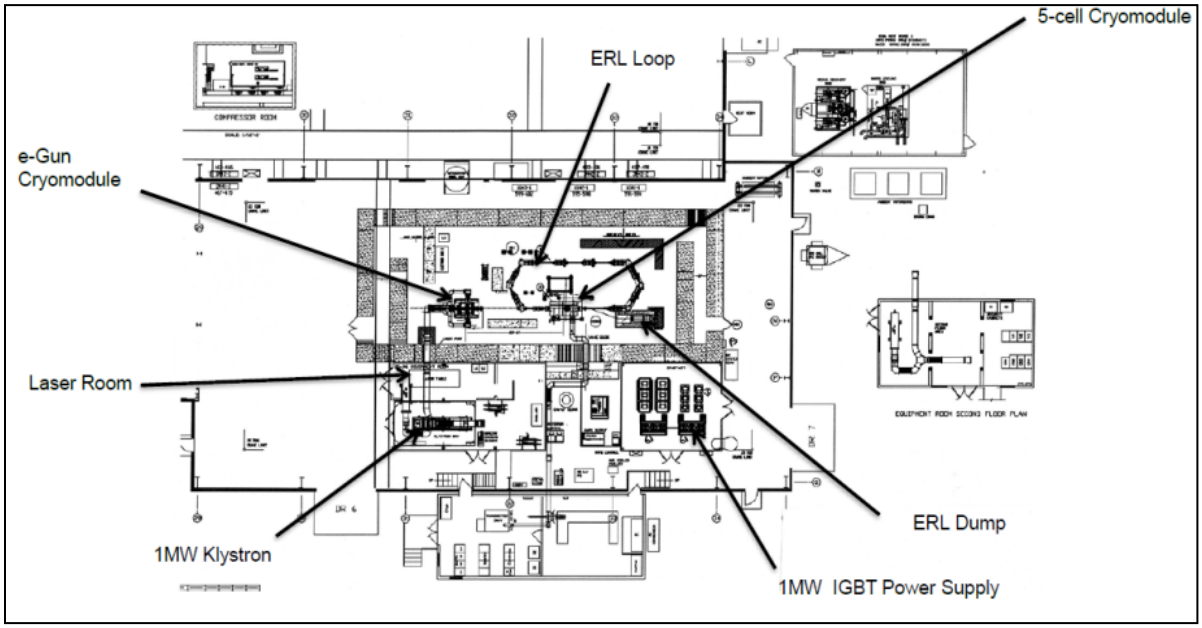

Figure 1 Layout of BNL R&D ERL at building 912

ERL Commissioning Staging and Responsible Persons

While some of the components and systems could be commissioned and tested independently, others need to be tested as a part of the ERL as a whole. The commissioning of ERL facility is logically broken down to several major milestones:

- Various Systems Ready (Cryogenic, Vacuum, Control, Interlock, PASS, Water, RF power)
- Cold emission tests (CETs)
- Beam from the gun (First beam test)
- Low power beam test
- ERL Beam line Test (ERL BLT)
- ERL 10 mA current
- ERL 300 mA current
- Report on successful completion of R&D ERL program

List of responsible persons:
Safety and conduct of operations: Lee Hammons
SRF- Sergey Belomestnykh, Wencan Xu
Beam optics – Dmitry Kayran, Vadim Ptitsyn
LLRF – Kevin Smith.
RF in general – Alex Zaltsman
Beam Diagnostics – Toby Miller, David Gassner
Photocathode – Triveni Rao, Miguel, Jin Dai, Tom Seda
Laser, timing and phasing – Brian Sheehy, Triveni Rao
General Control - Jim Jamilkowski
Machine protection – Zeynap Altinbas
Radiation Safety – Dana Beavis
Magnets Power Supply – Bob Lambiase

Safety Considerations

When commissioned as an accelerator, ERL is subject to the requirements of the DOE Accelerator Safety Order, DOE O 420.2C or its successors. ERL is a low-hazard facility with potential for no more than minor on-site and negligible off-site impacts to people and the environment. The possibility of any off-site impacts or major on-site impacts is highly unlikely due to the physical aspects of the ERL whereby it is dependent upon an external energy source; that is, electric power that can be easily terminated. C-AD confines the radiation hazard, which is a non-standard industrial hazard, to the beam pipe or immediate surroundings within the shielded enclosure, and radiation is in existence only when a beam is present. The other non-standard industrial hazard is the potential for an oxygen deficiency hazard (ODH) due to the size of the enclosure and volumes of helium and nitrogen in use. C-AD categorized the enclosure as ODH 0. C-AD uses low-

oxygen concentration alarms and interlocked ventilation fans for detection and protection, respectively. Other hazards at ERL are standard industrial hazards that were determined to be low risk.

During commissioning, C-AD requires routine radiation surveys by qualified Radiological Control Technicians using portable radiation monitors to verify the radiation-protection controls on a regular basis. C-AD designed the ERL shielding such that exposure to workers in Controlled Areas and uncontrolled areas is less than the annual limits, which are 100 mrem and 25 mrem respectively.

Commissioning and operation will be performed in phases. Each phase will be started with its own authorization:

- CET tests commissioning/operation under Radiation Generated Devise permit (approved)
- Low power beam test (included first beam from the gun initial test) commissioning/operation under special exemption. Average beam power will be limited to less than 70 watts. The C-AD Radiation Safety Committee and the Laboratory ESH Committee reviewed this test. A request for DOE approval is under way
- First beam through the loop test (BLT) commissioning and beyond will be perform after conducting an Accelerator Readiness Review (ARR) for the full ERL accelerator facility (assembling an ARR Team is in progress)

2.0 Cold Emission Tests (CETs)

The 704 MHz SRF gun is a key component of ERL. The gun can provide electron beams with an energy gain of up to about 2.5 MeV. The set of cold emission tests will be conducted in order to reduce risk of contamination and performance degradation of the gun cavity. Each test is designed to increase complicity??? of the system gradually.

The cold emission tests will only test the half-cell 704 MHz SRF cavity in cryo-module without laser and without electron beam. The half-cell 704 MHz SRF cavity is enclosed in a cryostat, and is shown in Figure 2. CETs will be carried out by the SRF team led by Sergey Belomestnykh and Wencan Xu.

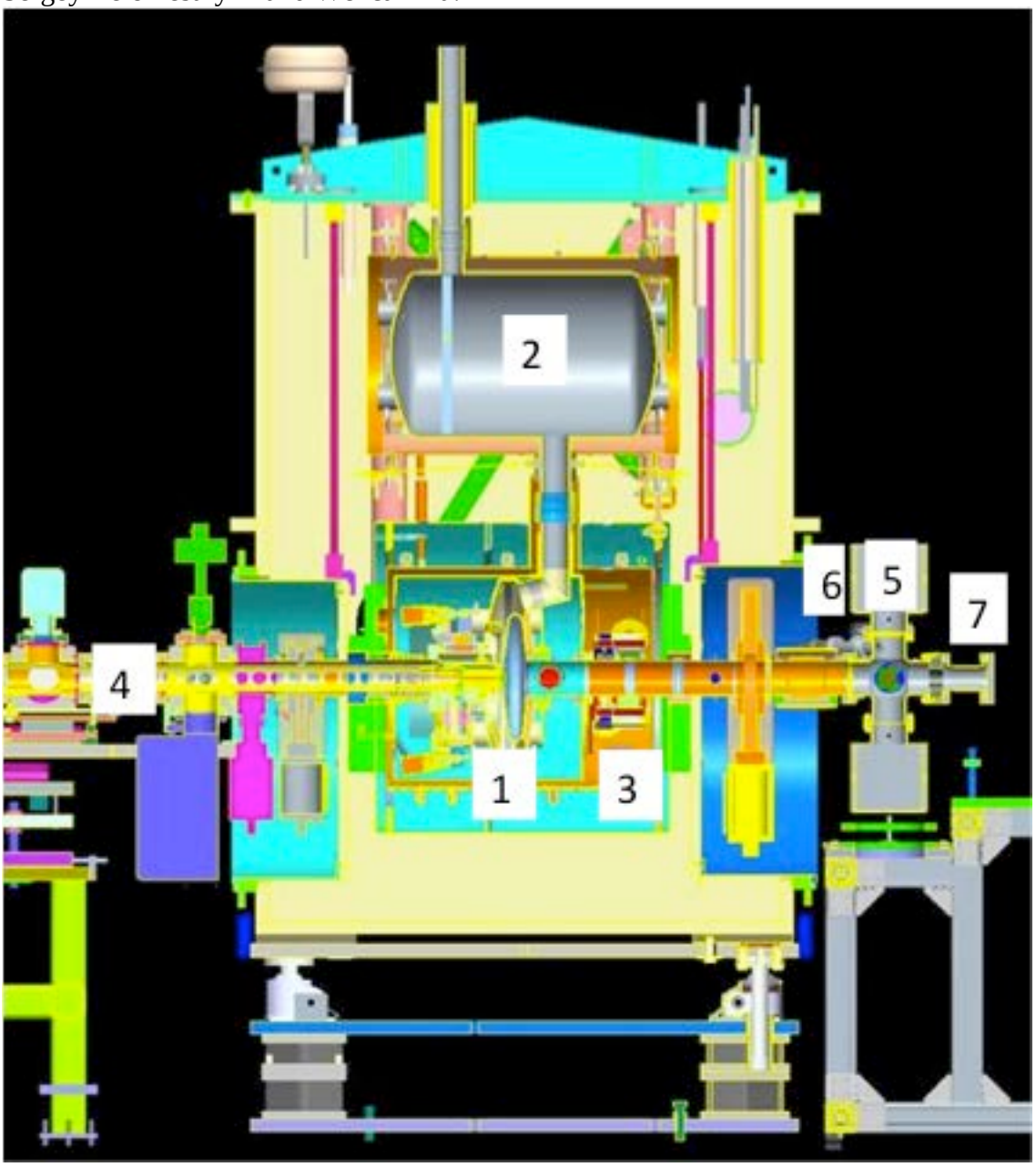

Figure 2 Schematic setup for first beam test commissioning. This setup will be used to perform CETs: 1) SRF gun in cryostat, 2) helium ballast tank, 3) high temperature superconducting (HTS) solenoid, 4) cathode insertion/lock mechanism, 5) laser/vacuum pump cross, 6) in flange fast current monitor (ICT), 7) Faraday cup (FC)

SRF Gun Cold Emission Test without Cathode

The first cold emission tests will be performed without cathode and with both downstream and upstream gun string assembly gate valves closed.

The key goals for the tests include:

- Test the performance of half-cell cavity w/o cathode
- Practice run the integrated SRF
- Test the high temperature solenoid
- Reach minimum voltage 1 MV (2.5 MV is a goal) at the gun with stable CW operation

Personnel needed:

- Machine protection expert is required while systems are turned on
- Control systems expert as needed for the operation of the control system
- Cryo experts are required to start up the refrigerator, cool-down and obtain stable conditions
- LLRF expert required for initial operation of the LLRF
- HP representative is required to survey radiation as we increase voltage at the gun
- Water, vacuum, power-supplies on call as needed

Preliminary operations:

- Establish machine protection set points
- Get cryogenic conditions stable
- Establish operations with low level RF (LLRF)

Measurements:

1. Apply stable RF fields, measure stability of amplitude, phase and frequency and calibrate forward power, reflected power, pickup, etc. Objective: 2.5 MeV beam energy. Minimum required: 1MeV beam energy
2. Q vs V, and do conditioning as necessary; monitor X-rays, cryogenic load and vacuum
3. HP survey outside blockhouse if necessary
4. Noise, identify and abate
5. Measure tuning range of cavity
6. Test HTS solenoid
7. Re-measure Q vs E
8. Test 5-cell cavity to achieve amplitude and phase lock under CW and with duty factor

SRF Gun Cold Emission Test with Metal Cathode

Pre-condition: Metal cathode inserted into gun by cathode team

Second cold emission test performed with metal cathode, downstream gun gate valves closed and upstream gun string assembly gate valves opened. The metal cathode is chosen to minimize the risk of contamination of the SRF gun.

The key goals for the tests include:

- Test the performance of half-cell cavity with metal cathode
- Multipactoring studies
- Reach minimum voltage 1 MV (2.5 MV is a goal) at the gun with stable CW operation

Personnel needed:

- Control systems expert as needed for the operation of the control system
- Cryo experts are required to start up the refrigerator, cool-down and obtain stable conditions
- LLRF expert required for initial operation of the LLRF
- Machine protection, Health Physics, water, vacuum, power-supplies on call as needed

Preliminary operations:

- With no deposited photocathode, test for multipacting and condition as necessary. Conditioning scheme similar to the process of FPC conditioning (have OPM, paper)
- Apply stable RF fields, measure stability of amplitude, phase and frequency; Objective: 2.5 MeV beam energy. Minimum required: 1 MeV beam energy
- Test HTS solenoid if possible, will require Machine Protection and Power Supplies representatives

Measurements:

1. Re-measure Q vs E
2. Look for dark current from cathode. (BLMs signal?). In order to use FC signal for current measurements, the downstream gate valve has to be opened and SRF expert authorization is required
3. Measure dark current versus solenoid field
4. Transition time interval from CET2 to CET3 is to be used for testing 5-cell cavity LLRF (Work plan should be developed by SRF group)

SRF Gun Cold Emission Test with Multi-Alkaline Cathode

Pre-condition (cathode team is required):

- Remove metal cathode
- Bring cathode to deposition system
- Deposit multi-Alkaline cathode
- Insert deposited multi-Alkaline cathode into the gun

The third cold emission test are performed with Multi-Alkaline cathode installed downstream of the gun; gate valves closed and upstream gun string assembly gate valves opened. This test is going to bring the gun to final configuration for beam operation later on.

The key goals for the tests include:

- Test the performance of half-cell cavity with Multi-Alkaline cathode
- Multipactoring studies
- Reach minimum voltage 1MV (2.5 MV is a goal) at the gun with stable CW operation

Personnel needed:

- Control systems expert as needed for the operation of the control system.
- Cryo experts are required to start up the refrigerator, cool-down and obtain stable conditions
- LLRF expert required for initial operation of the LLRF
- Machine protection, Health Physics, water, vacuum, power-supplies on call as needed.

3-22-13

Shift Teams:

	Team A	Team B
Beam (shift leader)	D. Kayran	V. Ptitsyn
SRF	S. Belomestnykh	W. Xu

Measurements:

1. With deposited photocathode, test for multipacting and condition as necessary. Conditioning scheme similar to the process of FPC conditioning (have OPM, paper)
2. Apply stable RF fields, measure stability of amplitude, phase and frequency. Objective: 2.5 MeV beam energy. Minimum required: 1 MeV beam energy.
3. Test HTS solenoid
4. Re-measure Q vs E
5. Measure dark current from cathode vs solenoid field and/or RF gun voltage with opened downstream gate valve
6. Check available beam instrumentation (BLMs, FC, ICT)
7. Check laser synchronization

At this point SRF Gun is ready for the beam

3.0 First Beam Test

Precondition: Multi Alkaline deposited photocathode inserted into gun. Laser synchronized with LLRF. SRF gun operation regimes are established during previous steps.

Goals:
- Launch the first beam from the gun.
- Beam instrumentation commissioning/ setup/calibration
- Basic beam parameters measurements

Main Parameters:
- Maximum Gun energy 2.5 MeV (will operate at 0.5 MeV)
- Multi-Alkali photocathode
- Laser pulse FWHM length 8.5 psec
- Operating: single or/and train pulses
- Limited average current ~3 uA
- Charge 0.01 - 1 nC

Personnel needed:
- Control systems expert as needed for the operation of the control system
- Machine protection for actuation of new systems (laser)
- Cryo experts are required to start up the refrigerator, cool-down and obtain stable conditions
- LLRF expert required for initial operation of the LLRF with laser
- Water, vacuum, power-supplies on call as needed

Shift Teams:

Beam (shift leader)	Dmitry, Vadim
SRF	Sergey, Wencan
Laser	Brian, Triveni
Instrumentation	Dave, Toby
HP (radiation)	TBD

Necessary diagnostics:

Faraday cup (FC), Integrating Current Transformer (ICT). The minimum charge detection sensitivity of these (Provided by Toby) are: ICT 10-50 pc, FC 10 pC

Measurements:

1. Measure charge out of gun as a function of gun-to-laser phase. Typical charge vs phase dependence for given cavity design shown at Fig. 3.

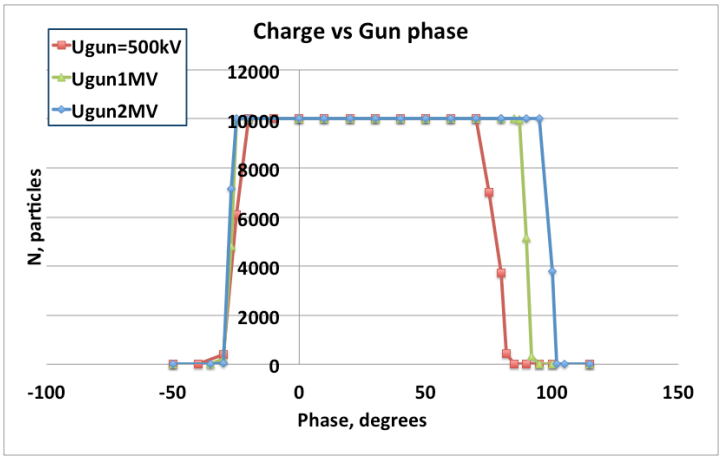

Figure 3 Example of beam output from the gun dependence on gun launch phase for different gun voltage

2. Based on previous measurements, adjust the laser phase as necessary. Increase charge gradually until good signal is detected, all at very low macro-pulse repetition-rate. Solenoid to be adjusted as necessary (see Tab. 2).

Table. 2. Solenoid set points for different gun voltage

Gun voltage:	0.5 MeV	1 MeV	2 MeV
Solenoid field:	250 Gauss	450 Gauss	800 Gauss
Solenoid current:			

3. Calibrate beam loss monitors (BLMs) by scanning steering magnet for the center of the available aperture by observation beam hitting the vacuum chamber wall at BLM
4. Conduct cathode QE measurements at low average current
5. If time allows, measure the beam position in the first solenoid by varying the field in solenoid and monitor beam center at BLMs downstream
6. If time allows, measure average current and BLM signal versus laser power and spot size. Reach maximum charge per bunch

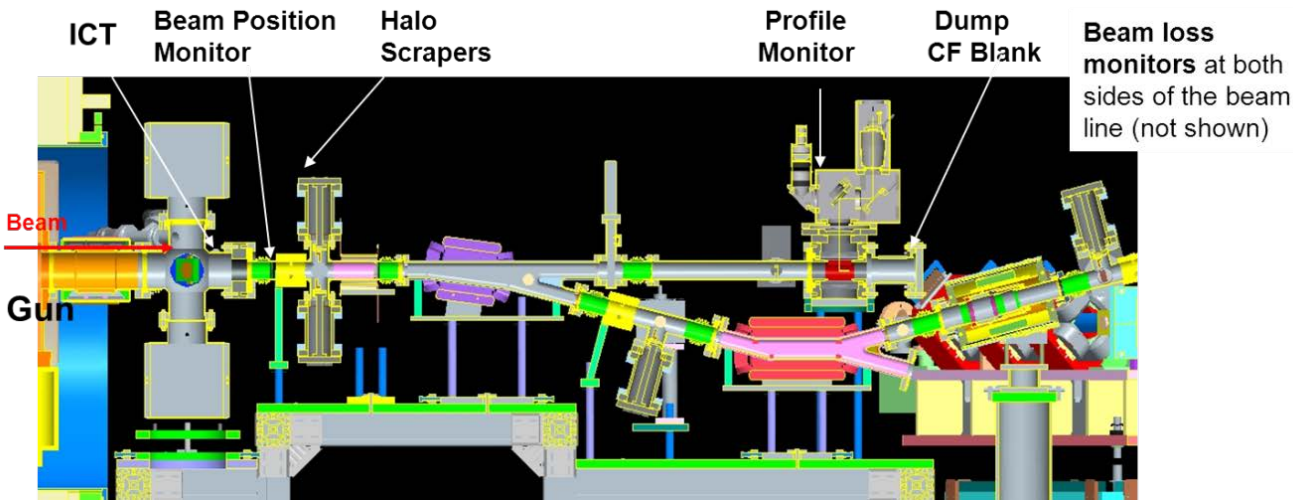

Figure 4 Low power beam with injection line straight test. More instrumentation is installed

If beam profile monitor and halo scrapers are available (Figure 4):

Measurements:

1. Measure laser spot center position (using mask, 7 holes in an 8 hole pattern, one missing hole to determine beam rotation)
2. Measure the beam position in the first solenoid by varying the field in solenoid and monitor beam center at beam profile monitor or/and BPM downstream
3. Calibration beam loss monitors (BLMs) by scanning steering magnet for the center of the available aperture by observation beam hitting the vacuum chamber wall at BLM
4. Measure beam energy vs. laser phase and gun voltage. Use steering magnet (or 1 first Zigzag 15 degrees magnet at low current) and beam profile monitor downstream
5. Measure beam emittance (for different energy, phase, charge) using solenoid scan and beam profile monitor. Compare results with simulation
6. Conduct halo studies. Establish clean operation

4.0 Low Power Beam Test (Limited Power 70 Watts)

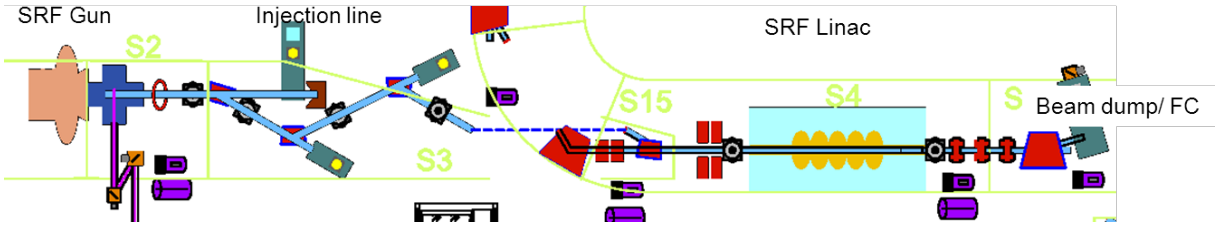

Figure 5 Low Power Beam Test Schematic Layout

Goals:

- Transport beam from the cathode to the 20 MeV beam dump
- First time use the SRF 5cell cavity to accelerate the beam
- More beam instrumentation commissioning/ setup (profile monitors, halo scrapers, high energy beam dump/fc)
- Measurements energy, emittance, beam losses
- Establish radiation background due to SRF cavities
- Stable operation
- Beam dynamics studies

Main Parameters:

- Maximum injection energy 3 MeV
- Maximum energy 20 MeV
- Multi-Alkali photocathode
- Laser pulse 8.5 psec
- Operating: single or/and train pulses
- limited average current ~3 uA
- Charge 0.01-1nC
- Limited average power 70 Watt

Beam power is controlled by average laser power and known QE of the photocathode.

Personnel needed:

- Control systems expert as needed for the operation of the control system.
- Machine protection for actuation of new systems (laser)
- Cryo experts are required to start up the refrigerator, cool-down and obtain stable conditions
- LLRF expert required on call as needed
- Water, vacuum, power-supplies on call as needed

Shift Team:

Beam (shift leader)	Dmitry, Vadim
SRF	Sergey, Wencan
Laser	Brian, Triveni
Instrumentation	Dave, Toby
HP (radiation)	TBD

Low Power Beam Through Zigzag Test

Goal: to transport beam through the ZigZag up to the linac (Fig. 6).

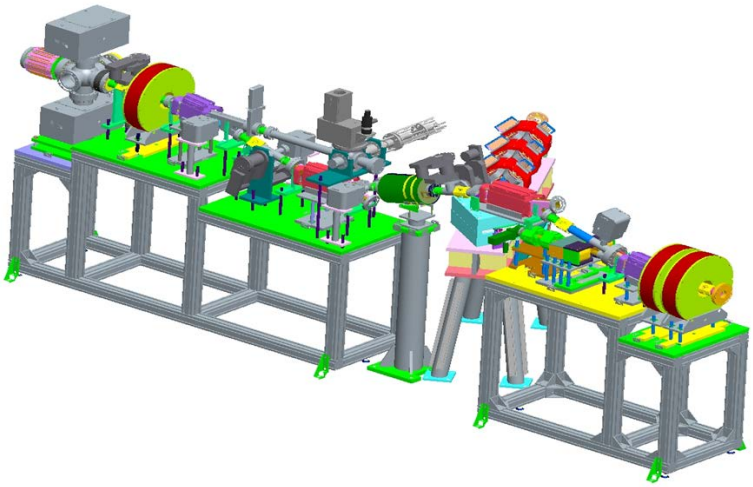

Figure 6 The Injection Part of Beam Transport of ERL

Necessary diagnostics:

- ICT, flags, BPMs, BLMs, DCCT

Measurements and Tests:

1. First perform energy measurements from straight line test to set the zigzag magnets field
2. Measure beam position using BPM or/and minimum beam losses technic using BLMs
3. Monitor beam energy by first Zigzag magnet and BPM
4. Transport beam through the magnetic center of quadrupole components in Zigzag magnets (varying the quadrupole coil current and monitoring beam position at BPM)
5. Comparing each BPM sum signal will give an idea beam losses in transport line (10% accuracy will be great)

Low Power Beam Through 5 Cell Cavity Test

Goal: To transport and accelerate beam through SRF linac (Fig. 7)

Main Parameters:

- Maximum linac gain 18 MeV
- Laser pulse 8.5 psec
- Operating: single or/and train pulses
- limited average current ~3 uA
- Charge 0.01-1nC
- Limited average power 70 Watt

Necessary diagnostics:

- ICT, flags, BPMs, BLMs, DCCT

Measurement and Tests:

1. Synchronization of SRF Gun, SRF Linac and Laser
2. Measure beam position using BPM or/and minimum beam losses technic using BLMs.
3. Measure charge at high energy (~20 MeV) end of the system
4. Measure vertical dispersion by varying the energy and monitoring the BPM signal at the first BMP downstream of 5 cell cavity

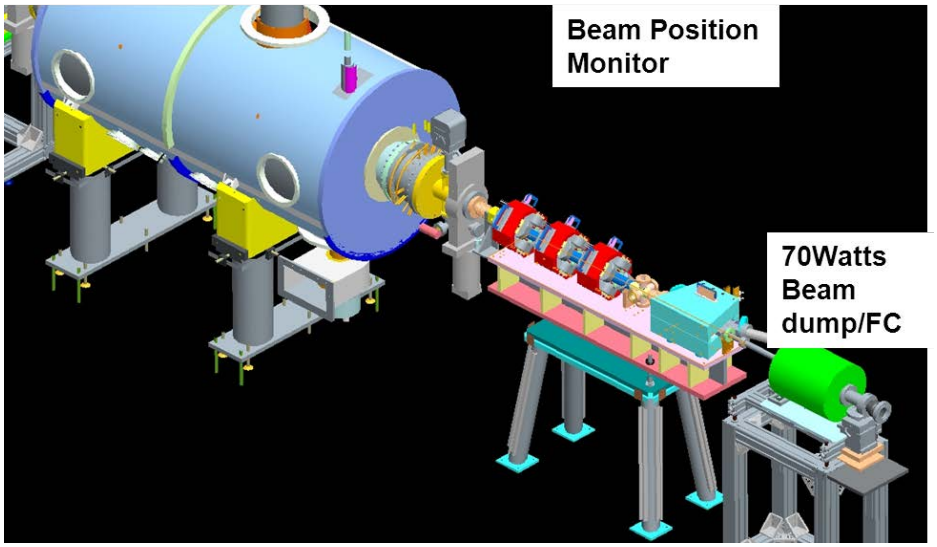

Figure 7 High Energy Part of Beam Transport of Low Power Test

5.0 ERL Beam Line Test (ERL BLT)

Beam loop test (Fig. 8) is designed in order to establish as soon as possible first beam through the loop into the dump. No special beam quality requirements. It requires minimum instrumentation to transport the beam through complete ERL system: beam position, beam losses, flags, beam current preservation (~1uA).

Learning the machine performance during previous commissioning phases allows proceeding with smooth transition to loop commissioning. The BLT test will include beam dynamic studies as well as intensive radiation studies.

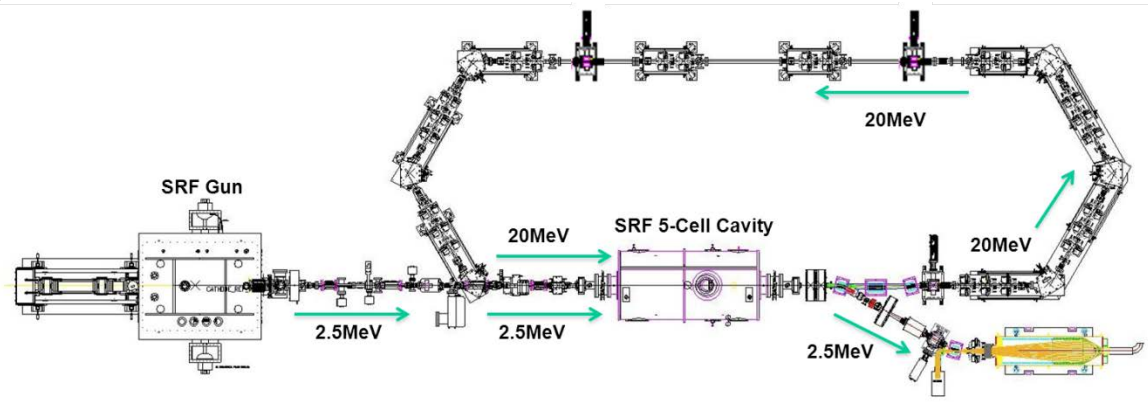

Figure 8: ERL Layout

BLT Main Parameters:

- Maximum Gun energy 2.5 MeV
- Top energy 20 MeV
- Multi-Alkali photocathode
- Laser pulse: FWHM 8.5 psec, r=2mm
- Operating: single or/and train pulses
- limited average power 70W
- Charge 100 pC

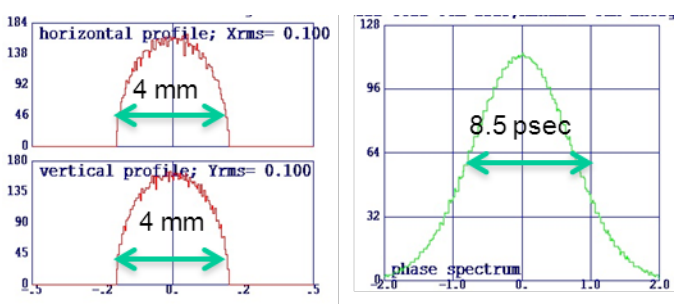

Figure 9 Initial laser/bunch shape for BLT operation

Necessary diagnostics:

- Flags, ICT, DCCTs, BPMs

3-22-13

Measurements and Tests:

1. Monitor injection beam energy by first Zigzag magnet and BPM in injection line
2. Measure energy after acceleration using first arc dipole and followed BPM
3. Transport beam through the magnetic center of quadrupole components in the arcs
4. Comparing each BPM sum signal will give an idea beam losses in transport line (10% accuracy will be great)
5. Measure current at beam dump
6. Calibrate BLM using knowing location for beam losses
7. Establish better than 99% beam transport from the gun to the dump

Fault and radiation studies at gun power 10 Watts

1. Reestablish gun beam to the dump 10 W
2. Then establish beam around the Ring, which is 100 W
3. **Conduct fault and radiation studies at points around the ring**
4. Hold point: examine radiation levels and implement any adjustments required to go to the next phase; examine with RSC Chair if the dose rates are understood

Proceed with beam studies in ERL mode at this power level

1. Fault and radiation studies at gun power 100 W
2. Reestablish gun beam to the dump
3. Then establish beam around the ring, which is 1,000 W
4. Conduct fault studies at points around the ring. This power was chosen since it may be on the order of the maximum that the ring can tolerate without damage. This threshold level needs to be determined before the fault study. Some locations may tolerate larger faults.
5. Hold point as before. If radiation levels have been detected outside the shield they can be used to estimate the escalation to higher dose rates.
6. Proceed with beam studies in ERL mode at this power level

At this point the first in the world solely SRF based ERL is successfully in operation.

After ERL BLT is Operational (Table 2):

(as time and recourses available):

1. Commissioning rest of beam instrumentation (pepper pot, dipole profile monitors, halo monitors etc.)
2. Install/commissioning laser beam shaper, transverse and longitudinal
3. Produce high charge per bunch with low emittance
4. Conduct beam dynamics studies at low and high energy
5. Gradually increase average current monitoring BPMs, BLMs, DCCT (upto 10 mA)
6. Commissioning laser for 704 MHz
7. Gradually increase current to 300 mA

	R&D ERL design		
	BLT, test	**High Current**	**High charge**
Charge per bunch, nC	**0.1**	**0.5**	**5**
Energy maximum/injection, MeV	20/2.5	20/2.5	21/3.0
R.m.s. Normalized emittances ex/ey, mm*mrad		1.4/1.4	4.8/5.3
R.m.s. Energy spread, dE/E		3.5×10^{-3}	1×10^{-2}
R.m.s. Bunch length, ps	8.5 Gaussian	18, flat	31, flat
Bunch rep-rate, Hz	10^4b train	704×10^6	9.383×10^6
Gun avrg. current, mA	**0.001**	**350**	**35**
Linac average current, mA	0.002	**700**	**70**
Dumped beam power, kW	**0.002**	**700**	**70**
Numbers of passes	1	1	1

Table 2 ERL Beam Parameters For Different Mode of Operation

The detailed plan of beam measurements for 10 mA and 300 mA commissioning will be developed on the bases of the result of BLT beam commissioning.

ERL 10 mA Current

1. Conduct 10kW gun transport to the beam dump.
2. Check dump performance
3. Check five-cell cavity
4. Examine dose from dump and on roof if possible.
5. Proceed with beam studies in ERL mode at this power level

3-22-13

ERL 300 mA Current

1. Conduct 100kW gun transport to the beam dump.
2. Check dump performance
3. Check five-cell cavity
4. Examine dose from dump and on roof if possible.
5. Proceed with beam studies in ERL mode at this power level
6. Conduct 1MW gun transport to the beam dump.
7. Check dump performance
8. Check five-cell cavity
9. Examine dose from dump and on roof if possible.
10. Proceed with beam studies in ERL mode at this power level

At this point the R&D ERL program successfully completed

3-22-13

Additional material:

Comments about BPM sensitivity from Dave and Toby: BPM should give a decent signal at 1 nC charge per pulse. Cathode/laser system needs to provide pulses of 100 bunches at 9.38 MHz with 10 pC per bunch. BPMs bandwidth is 10-15 MHz.)

As of June 18, Toby Miller expects the following instrumentation to be ready for the first beam from gun test (expected at the end of October):

1. (1) **ICT**: Integrating Current Transformer with the 10kHz Integrate-Reset-Hold electronics

2. (1) **BPM**: equipped with Libera Electronics Box with a typical PET page interface

3. (4) **BLM**: Photomultiplier (PMT) and Ion Chamber (IC) type beam loss monitors (two ea.) interfaced to the RHIC style beam loss electronics. These are movable in the block house.

4. (2) **SCRPR+FC**: *SCRUBBED* – Vertical scraper pair with Faracay Cup electrodes, installed but not officially supported. *These have a good chance of being useable anyway.*

5. (1) **PPT**: *SCRUBBED* – Pepper Pot, installed but not officially supported. *Although the motion control should be ready, the laser alignment of the slits was postponed to save labor.*

6. (1) **PM**: YAG screen in profile monitor

7. (1) **FC**: Beam dump on SS flange with Faraday Cup amplifier + integrator electronics connected. No bias voltage is foreseen.

Commissioning the Gun-to-Dump Section of the ERL, Stage 1 of the Commissioning Plan

The final layout of the Energy Recovery Linac (ERL) is described in Figure 1. The 5-cell cryomodule and the ERL loop will not be included in the commissioning of the Gun-to-Dump portions of the ERL. All other aspects of Figure 1 will be commissioned at full current and gun energy limits in the Accelerator Safety Envelope (ASE).

It is intended that the ERL will be undergo Accelerator Readiness Review (ARR) in two stages. The first stage is the commissioning of the beam path from the gun to the beam dump, with the SRF accelerating cavity turned off. During this first ARR the ERL loop magnets and vacuum chamber as well as associated components will not be addressed. These portions of ERL will be commissioned in Stage 2. Table 1 provides a detailed list of the components described in Figure 2.

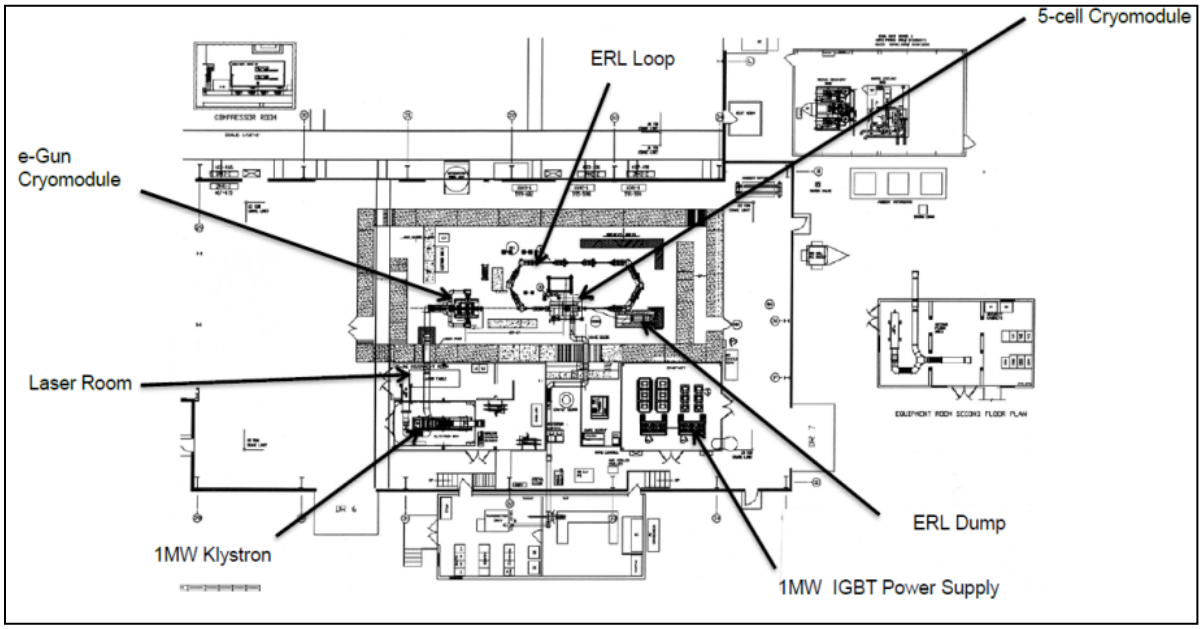

Figure 1. Final Layout of BNL R&D ERL at Building 912

The ERL uses a high-current electron beam generated by a laser-photocathode superconducting RF (SRF) electron gun. A laser is illuminating a photocathode located in the SRF gun to generate the electron beam.

The electron beam is focused and guided by a collection of magnets in an evacuated beam pipe. These magnets are energized by power supplies. The shielding accounts for all angles of electron beam bending that can be driven by maximum magnet current.
The ERL beam will not be accelerated by a SRF accelerating cavity during the gun–to-dump commissioning. The operation of the SRF gun and SRF cavity is controlled by RF electronics, including high-power amplifiers. After passing through the ERL, the beam is disposed in a high-power, water-cooled beam-dump.

The ERL is equipped with beam instrumentation that measures the beam current, location, size, energy and other more specific parameters. The instrumentation also includes radiation measurement devices to detect potential beam losses.

The ERL is shielded by concrete and steel enclosure designed to contain the radiation generated by the operation of the ERL. The entry to the ERL enclosure is controlled by a Personnel Protection System (PPS).

The ERL is equipped with a machine protection system that shuts off the beam, RF power or other components to protect the ERL equipment during commissioning. The layout of the beam-line components for gun-to-dump commissioning is shown in Figure 2. A computer control system governs all the machine parameters and collects data.

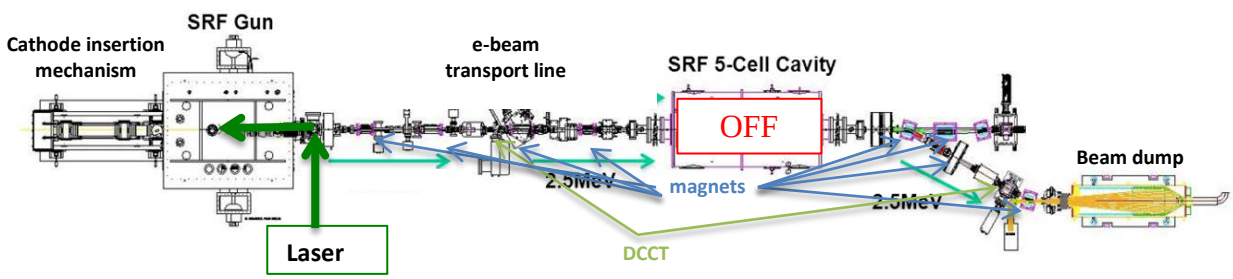

Figure 2. Layout of the Main Components of the Gun-to-Dump Beam-Line in Stage 1

Table 1. List of Stage 1 Commissioning Components

Photocathode	Laser
SRF gun	Magnets: dipoles, solenoids, correctors
Klystron	Magnets power supplies
SRF accelerating cavity (OFF)	Vacuum Pumps
High power RF amplifier	Beam instrumentation: DCCT, Rad Monitors, BPM
Cryogenic system	Beam dump

The scope of this commissioning of gun to dump is as follows: The beam, generated in the SRF gun, will be transmitted to the beam dump. The SRF accelerating cavity will be off. The commissioning will be carried out according to the ERL Safety Analysis Document (SAD) of the ERL and will not violate the limits set by the ERL Accelerator Safety Envelope (ASE). Low current beam will be used initially, and once beam is controlled, current will be increased. Once high current beam is controlled, fault studies will be performed. After fault studies, other commissioning objectives will be accomplished.

BROOKHAVEN
NATIONAL LABORATORY

July 14, 2014

COLLIDER-ACCELERATOR DEPARTMENT (C-AD) Energy Recovery Linac Building 912

CONDUCT OF OPERATIONS CONFORMANCE MATRIX

Prepared By: Lee Hammons
L. Hammons, C-AD ERL Operations Coordinator

Departmental Approval: Edward T Lessard
E. T. Lessard, C-AD Associate Chair for ESSHQ

Departmental Approval: Ilan Ben-Zvi
I. Ben-Zvi, C-AD Associate Chair Accelerator R&D Division

Departmental Approval: Thomas Roser
T. Roser, C-AD Department Chair

GUIDELINE	PERFORMANCE	EXCEPTIONS
1) Policies a) Specify goals and the means to achieve them	1) Policies a) Goals, objectives and targets, some of which are derived from institutional-level documents, e.g., an Appendix of the BSA Contract, Critical Outcomes, Objectives and Performance Measures, are integrated into the Department's Environmental Management Programs (EMPs), OSH Management Plan and the annual Self Assessment Plan for the C-AD. The C-AD goal for risk from all hazards is not only to be below relevant legal limits, but also is to be 'as low as reasonably achievable (ALARA).' The goal for work related illness and injury is zero and ESH is an overarching priority for all activities. For radiation exposure, the annual ALARA goal is recommended by the ALARA Committee and approved by the Department Chair. The ALARA philosophy has also been expanded to include waste generation and the potential for pollution from accelerators and experiments. Performance against goals is reviewed by C-AD and BNL managers at the annual Environmental, OSH and Self Assessment Management Review, and resources are assigned, if appropriate, following the review.	1) Policies None
b) Specify the type of controls necessary to implement the policy	b) Supervision, administrative controls, training, procedures and engineered safety systems are used to implement policy.	
c) Personnel should understand their authority and responsibility, through accountability	c) Authority, responsibility, accountability and interfaces with other groups are defined clearly in the Operation Procedure Manual (OPM), Chapter 1, "Authorization, C-AD Documents, and Definitions" and Chapter 2, "Guidelines for the Conduct of C-AD Operations." Specific individuals are trained and held accountable for safety, emergency, commissioning and operations roles. The Department employs the R2A2 concept, which is an institutional program to define role, responsibility, accountability and authority for each employee. In addition, to hold all staff responsible for accountability, OPM 1.26, "C-AD Standards for Disciplinary Action" describes the Department disciplinary policy.	
d) Physical Security should conform to DOE 5630.11, "Safeguards and Security Program"	d) The exterior doors to most buildings are locked from 5 PM to 8:30 AM and on weekends and holidays. The ERL is secured when operations personnel are not in residence. C-AD accelerator areas are secured via automatic access-control system hardware. In addition, requirements for security of valuable materials is specified in OPM 1.20, "C-A Policy for Valuable Materials Security" and OPM 9.10, "C-AD Security Committee Policy and Requirements."	

GUIDELINE	PERFORMANCE	EXCEPTIONS
2) Resources a) Provide sufficient resources, material, and labor	2) Resources a) ERL has a minimum number of operations personnel and operating supervision defined in the ERL Accelerator Safety Envelope. These roles along with those of other technical support personnel are defined in OPM 18.2.1, "ERL Operations Organization and Administration". This minimum staff is deemed sufficient by DOE for safe operation, although larger staffs may be used routinely for operational and research efficiency. During operations, materials and resources for ERL are managed day-to-day by the ERL Operations Coordinator. During Shutdown, the ERL Operations Coordinator is assisted by the Research Space Manager and the C-AD Maintenance Coordinator in coordination of work planning and activities. Sufficient resources are provided.	2) Resources None
b) Do not use excessive overtime	b) Excessive overtime is avoided where possible by following the guidance in OPM 1.23, "Staff Working Hours and On-Call Hours."	
c) Provide technical support personnel	c) The technical support personnel, ERL Operations Personnel, Radiological Control Technicians (RCTs), Collider Accelerator Support (CAS) personnel and Cryogenic Systems (Cryo) Watch personnel, are staffed according to various changes in ERL operations.	
d) Develop a long range staffing plan.	d) C-AD management prepares long-range staffing plans for future support of ERL research, modification, operating and maintenance activities.	

GUIDELINE	PERFORMANCE	EXCEPTIONS
3) Monitoring Of Operations Performance a) Refer to Chapter VI for operating problems	3) Monitoring Of Operations Performance a) See Chapter VI for operating problems	3) Monitoring Of Operations Performance
b) Document problems for evaluation	b) Scheduled inspections, performance indicators, audits, reviews, critiques, injury and illness reports, self-assessments and self-evaluations are used to document problems for evaluation and to observe operations. Problems are also documented via the Occurrence Reporting System (OPM 10.1). Minor issues are critiqued to reduce the chances that they lead to future occurrences. The ERL operators use a web-based machine-performance monitoring log.	None
c) Supervisor should observe operations frequently.	c) Supervisors participate in inspections and audits, they are members of safety review committees, and they are encouraged by C-AD management to 'supervise by walking around.'	
d) Operations Goals should be to: i) Minimize the unavailability of the safety system	d) Operations Goals i) Operations procedures minimize the unavailability of safety systems by requiring operations to be curtailed should safety systems fail to operate	
ii) Minimize personnel errors	ii) Minimizing personnel errors is a goal, see OPM 18.2.1, "ERL Operations Organization and Administration." INPO Human Performance approaches are used to minimize events by recognizing error-likely situations.	
iii) Conform to ALARA guidelines	iii) ALARA is integrated into routine operations via OPM 18.6.2, "ALARA Strategies for Tuning during ERL Operations" and into work review and planning via ALARA Committee procedures (OPM Chapter 9.5 series). ERL operations aim at reducing beam losses to the lowest reasonably achievable level.	
iv) Minimize loss of the facility capability	iv) High reliability is a C-AD goal given the overarching constraints of safety and the available resources. Equipment breakdown is considered during ERL design, modifications, operations and maintenance based upon experience gained in the past 45 years in the Collider-Accelerator Department.	

GUIDELINE	PERFORMANCE	EXCEPTIONS
v) Minimize the number of unscheduled shutdowns	v) Unscheduled shutdowns are minimized through periodic maintenance, formal reporting of problems using good communications between physicists and operators such as the Weekly Time Meeting and the C-AD Web Site, and by designing equipment to be "radiation hardened."	
vi) Complete inspections on a timely basis	vi) Completing inspections on a timely basis is ensured through written procedures and checklists for ERL Operations Personnel, Physicists, RCTs, Cryo Watch, CAS and system specialists.	
vii) Minimize the amount of overtime	vii) Overtime is specifically addressed in OPM 1.23, "Staff Working Hours and On-Call Hours."	
viii) Achieve and maintain complete staffing and training requirements	viii) Achieving and maintaining complete staffing and training requirements are requirements in OPM 18.2.1. For example, see the minimum staffing requirements for ERL operations in OPM 2.5.6, "Accelerator Safety Envelope Credited Controls and Supports for ERL."	
ix) Minimize waste	ix) Waste minimization is a formal program in SBMS, and requirements are implemented via the OPM 8.20 and OPM 8.22 series of procedures that deal with hazardous, radioactive and clean waste plus recycling. Also see OPM 1.7, "Supervisory Practice for Working with Hazards," which describes supervisor responsibilities in this area. Waste minimization and pollution prevention are specific responsibilities listed in each person's R2A2 (Roles, Responsibility, Accountability and Authority). It is also considered during the environmental concerns portion of planning of work as shown on the Work Permit form.	
x) Minimize the number of lighted annunciators	x) When new systems are introduced into the ERL, human factors are considered in the design of panels and annunciators.	
xi) Goals should be measurable, achievable, and auditable	xi) Goals such as days away from work or transfer (DART) case rate, collective dose and dose per proton are measurable and many have been achieved each year over the last decade. Specific operations goals are included in the Department's Self-Assessment Plan. ALARA goals are included in OPM 9.5.7, "ALARA Goals." Periodic meetings of ERL	

GUIDELINE	PERFORMANCE	EXCEPTIONS
	staff occur during operations and less frequently during major shutdowns. ERL Operations Personnel, System Specialists, and C-AD management meet on a regular basis to critique ERL operation and to discuss future goals.	
xii) Develop an Action Plan to meet goals	xii) The Self Assessment Plan is an action plan for Department operations. Ad hoc groups or C-AD committees typically develop action plans in response to an event or audit results. Action plans to meet goals are also found in the Department's Environmental Management Programs and OSH Management Plan that relate to BNL environmental and OSH goals.	
xiii) Report results of audits to facility management and DOE	xiii) Results of audits are reported to C-AD management and where applicable up the line to DOE. Annually, results of audits are reviewed at the Department's Environmental, OSH and Self Assessment Management Review.	
xiv) Perform Self-Assessments	xiv) Management and worker self-assessments and self-evaluations are conducted on an established schedule and reports are forwarded to C-AD management. Corrective actions are tracked to closure via the Assessment Tracking System (ATS). See OPM 9.4.2, "C-AD Self Evaluation" and OPM 13.10.1, "Independent Assessment." The C-AD Enhanced Work Planning Procedure, OPM 2.28, "C-AD Procedure for Work Planning and Control for Operations," contains a job-specific assessment module that requires workers to assess specific jobs at completion. The department's self-assessment program is described in terms of the Baldridge Award Criteria in the Assessment Planning and Evaluation Criteria Framework as defined in the SBMS Integrated Assessment Subject Area.	

GUIDELINE	PERFORMANCE	EXCEPTIONS
4) Accountability a) Hold workers and supervisors accountable for their actions b) Use discipline and performance appraisals to ensure accountability	4) Accountability a) The C-AD has a formal performance appraisal program and Roles, Responsibilities, Authorities and Accountability (R2A2) program for all C-AD staff. These documents are maintained by the C-AD Chairman's Office. b) Adhering to all rules, including rules dealing with safety, quality, operations or maintenance, is factored into an individual's appraisal, performance goals and R2A2. Discipline has been used when appropriate as described in OPM 1.26, "C-AD Standards for Disciplinary Action." For example, letters to a personnel file have been written when procedures were not followed. On other occasions, personnel have been given time off without pay or Users have had letters sent back to their University management when safety rules were willfully violated.	4) Accountability None
5) Management Training a) Formal training of supervisors and other management should be incorporated into overall training plan.	5) Management Training a) The C-AD Training Plan is described in OPM 1.12, "Conduct of Training Policy (Training Plan)." The C-AD has performed job assessments for all positions including management and supervisors, and has developed corresponding training requirements. The C-AD Training Manager maintains the Job Training Assessments (JTA). There is a separate training program to familiarize permanent and visiting staff about the safety requirements when operating and maintaining ERL.	5) Management Training None

GUIDELINE	PERFORMANCE	EXCEPTIONS
6) Planning For Safety a) Provide guidance to personnel so that they understand safety requirements b) Explain the role of Safety Analysis system to all operations personnel	6) Planning For Safety a) All jobs are assessed for environmental, safety and health hazards, and the necessary training is given before persons are authorized to perform the job. In order to guide personnel, the C-AD has incorporated job-specific safety requirements into OPM procedures. See OPM 2.28, "C-A Procedure for Work Planning and Control for Operations," and OPM 2.29, "C-AD Enhanced Work Planning Procedure for Experimenters." Where appropriate, C-AD has required staff and users to qualify in formal training programs where job-specific safety rules are explained. b) The ERL Accelerator Safety Envelope (OPM 2.5.6) sets the limits for safe ERL operations. Safety analysis and DOE approval are required for operations outside the envelope. Management requirements to control change at the accelerators or experiments are set down in OPM Chapter 9 procedures for physicists and engineers, and in OPM 2.11, "Conduct of Operations for Accelerator Physicists and System Specialists," which is directly relevant to accelerator physicists or beam commissioners. C-AD accelerator physicists, beam commissioners, project engineers, project physicists, liaison engineers and liaison physicists are made familiar with the requirements for safety review through periodic training. For operations that inadvertently go beyond the safety envelope, operators are required to report via the Occurrence Reporting Procedure, OPM 10.1. All operations staff is made aware of the protocols either for reporting occurrences or for scheduling safety reviews through facility-specific and job-specific training programs.	6) Planning for Safety None

GUIDELINE	PERFORMANCE	EXCEPTIONS
1) Status Reports a) Notify Supervisor of changes in facility status, and all abnormalities and unexpected situations	1) Status Reports a) ERL staff, supervisors and managers follow OPM 10.1, "Occurrence Reporting and Processing of Significant Operations Information." Events that do not meet the criteria of OPM 10.1 are critiqued based upon there significance. The ERL Operators log documents day-to-day changes in facility status and is reviewed each day by C-AD management. Abnormalities and unexpected situations are reported according to the notification list in OPM 3.0.a, "Emergency Call Down List," and at the rest of C-AD in OPM 10.1.a, "Occurrence Notification Call List."	1) Status Reports None
2) Safety Practices a) Adhere to BNL safety program, including the use of protective equipment	2) Safety Practices a) ERL follows OPM 18.2.2, "ERL Operating Practices" as it applies to ERL operations. This requires operators and physicists to adhere to procedures and to sound operating practices. All operators and physicists are trained in appropriate safety courses such as electrical safety, radiation safety, and hazardous materials handling. Areas and/or equipment are posted with requirements for protective equipment such as safety glasses, hearing protection, hard hats and non-treated, natural fiber clothing. Work planning procedures, OPM 2.28, "C-A Procedure for Work Planning and Control for Operations" and OPM 2.29, "Procedure for Enhanced Work Planning for Experimenters" are used to define safety requirements including protective equipment at the planning stage for specific jobs or experiments.	2) Safety Practices None
3) Inspection Tours a) Perform inspection tours to ensure the status of equipment is known b) Use tours to become familiar with the facility condition c) Tour activities should include: i) Reviewing equipment status ii) Looking for unexpected conditions	3) Inspection Tours a) The ERL Operation Coordinator visits ERL on a daily basis to review the log, and become familiar with operating difficulties. b) Tour activities at ERL are covered in OPM 18.2.2 "ERL Operating Practices." ERL operators and physicists perform a tour of the ERL facility and perform surveillance activities according to their procedures. Tours or sweeps are also used to ensure personnel are out of primary beam areas before beam is enabled. c) Tour activities include the following: i) A periodic review of equipment status including an examination of radiation levels, particle fluence rates, system pressures, temperatures and access control mode. ii) Operators and physicists are trained to look for unexpected conditions such as radiation levels, water leaks or smoke and to check local status	3) Inspection Tours None

GUIDELINE	PERFORMANCE	EXCEPTIONS
	panels and local alarms when on tour. The operators and physicists are also trained to inspect for area-specific abnormal conditions.	
iii) Checking panel & annunciator operation	iii) Local annunciators alert the person on tour to abnormal conditions. For inaccessible areas, panel annunciators are used to alert the ERL staff in the ERL Control Room. Primary areas are inaccessible during operations periods. Inaccessible areas use various sensors for smoke, water, pressure, oxygen concentration, ground faults and radiation which annunciate in the ERL Control Room and/or at the CAS watch station in Building 940 when appropriate.	
iv) Notation of any deficiencies found	iv) Deficiencies are noted in the logs of the various touring groups or, if necessary, reported back up the supervisory chain for immediate action.	
4) Round Tours a) Use approved Round Tour Inspection Sheets	4) Round Tours a) The ERL Operations Personnel, RCTs, Cryogenic Watch, Collider Accelerator Support (CAS) perform tours and record their findings. Approved inspection sheets are used; for example, area-specific sweep checklists, RCT survey forms, and Hazardous Gas Checklists.	4) Round Tours None
b) Record key parameters to analyze performance of systems and equipment and to facilitate shift turnover	b) Key parameters for equipment and systems are monitored and recorded in the ERL Control Room, Cryogenic Control Room, and at remote locations. Set points are monitored in the ERL Control Room. Shift records are maintained and reviewed during system startup or shift change.	
c) Round sheets should have the maximum and minimum values and operational safety limits highlighted to facilitate comparison with noted values.	c) The maximum and minimum values are in the controls database for parameters monitored from the ERL Control Room. Operational safety limits are listed in procedures. Maximum radiation levels are denoted by standard radiological area classifications. Cryogenic and other support systems have parameter ranges posted locally or written on log sheets.	
d) Review recorded values for trends	d) Radiation surveys and area monitoring data are routinely reviewed to estimate potential exposure of workers and experimenters. Equipment operations are continually monitored at the ERL Control Room and undesirable trends are determined in advance of equipment failures. For example, the radiation monitoring system detects beam losses well before serious radiation events occur. Operators or Physicists respond to this alert by returning power supplies back to service or by realigning the beam	

GUIDELINE	PERFORMANCE	EXCEPTIONS
	through magnet current settings. Radiation alarms are automatically recorded. Radiation data is summarized in hourly averages along with beam-intensity data and these values are reviewed periodically by supervisors and management, and daily by the RCTS. The C-AD Radiation Safety Committee and the ALARA Committee review the long-term trend of radiation levels. In the event of machine interruption, summaries of operator actions are recorded in the ERL Operations Journal, and the Journal is reviewed each day. Various categories of machine downtime are recorded and long-term trends are examined by the ERL Operations Coordinator and C-AD management.	
5) Personnel Protection a) Conform to 10CFR835 (ALARA) b) Assure proper use of Work Permits c) Supervisors should review exposure trends of workers	5) Personnel Protection a) Operators. Physicists and system experts are trained in ALARA practices during: a) BNL's Rad Worker I training, b) Collider-Accelerator Access training, which is C-AD site-specific training, ERL Specific training and c) BNL's Contamination Worker training. Additionally, the C-AD ALARA Committee procedures are in conformance with 10CFR835 Implementation Guide for Occupational ALARA Program. b) Work Permits (OPM 1.11 and OPM 2.28) or Radiation Work Permits (OPM 9.5.4) are required for specific jobs at C-AD and ERL. Proper use of these permits is reviewed via C-AD self-assessments or via quality assurance audits. Standing work permits are used for routine tours, inspections or work observations and skill-of-the-worker tasks. c) Supervisors review exposure trends periodically by reviewing self-reading dosimeter data and TLD results. The C-AD ESHQ Division management reviews and posts individual dose data each month on the web. Managers, ALARA Committee members, and supervisors review quarterly dose records via the C-AD Performance Indicator program. From time-to-time, special ad hoc committees made up of supervisors and managers are set up to review overall exposure trends at C-AD. Annually, the C-AD ALARA Committee reviews all radiological data from the prior year and makes recommendations to the C-AD Department Chair on dose goals for the coming year.	5) Personnel Protection None

GUIDELINE	PERFORMANCE	EXCEPTIONS
6) Response to Indications a) Identify and correct faulty instruments b) Believe instrument readings unless proven unreliable	6) Response to Indications a) Prompt action is taken to investigate abnormal or unexpected indication, see, for example, OPM 18.6.1, "Responding to Chipmunk Alarms and Interlocks". b) Operators, physicists and system specialists are instructed to believe instrument readings and treat them as accurate unless proven otherwise, see OPM 18.2.2, "Operating Practices for ERL," section 2.7. In order to instill trustworthiness, the area-radiation system is calibrated annually according to ANSI standards. See OPM 8.15.1, "C-A Equipment Annual Calibration Procedure for Chipmunks" and 8.15.2, "C-A Equipment Calibration Procedure for Chipmunk Test Box." The function of the Access Control System is also tested every year to ensure reliability. See OPM Chapter 4.	6) Response to Indications None
7) Resetting Protective Devices a) Understand current conditions prior to resetting protective devices	7) Resetting Protective Devices a) When a protective device trips ERL down to a safe state, such as would happen if unexpected radiation was seen by a Chipmunk area-radiation monitor, an undertaking is made by ERL Operations Personnel to understand the trip before the device is reset. The formality of this undertaking is written into procedures. See, for example, OPM 18.6.1 for radiation alarm response and OPM 18.3.2 or oxygen deficiency alarm response.	7) Resetting Protective Devices None
8) Load Changes a) Supervisor must approve any changes	8) Load Changes a) The ERL Operations Coordinator must be informed of and approve all power and process changes in consultation with the ERL Shift Leader and the ERL Space Manager. Additionally, drawings must be prepared, reviewed and acknowledged, to assure that all safety procedures have not been compromised before ac power systems are changed, see OPM 8.17.1, "Procedure for Documenting and Acknowledging Changes to AC Power Systems for Collider-Accelerator." Finally, the ERL Operations Coordinator provides guidance to the ERL Operations Personnel on which major loads shall be turned off when they are no longer needed for safety, equipment protection or programmatic reasons. See OPM 2.30, "Monitoring, Controlling and Minimizing Unnecessary Power Consumption by C-A Accelerators."	8) Load Changes None
9) Authority to Operate a) Operators should understand their authority to operate and that of the Supervisor	9) Authority to Operate a) Trained and qualified personnel operate ERL equipment. A web-based database lists all training records and identifies qualified personnel	9) Authority to Operate None

GUIDELINE	PERFORMANCE	EXCEPTIONS
	according to job classification (e.g., ERL Shift Leader, ERL Control Room Technicians, System Specialists, Physicists, CAS, Cryogenic Watch, RCTs and System Specialists). R2A2s are signed by personnel so that they are able to personally acknowledge their roles, responsibilities, authorities and accountabilities.	
10) Shift Operating Bases a) Establish places for administration, communications, and shift turnover	10) Shift Operating Bases a) The ERL Control Room serves as the operating base. It is equipped with office equipment needed to conduct duties, including communications equipment. It has areas for conducting shift changeover activities. Other operating bases include the RCT Offices, and the CAS Watch Building. These areas are also equipped with appropriate communications.	10) Shift Operating Bases None
11) Potentially Distractive Material a) Should be prohibited or controlled	11) Potentially Distractive Material a) Written material not pertinent to operations and entertainment devices are generally prohibited from use by on-duty personnel unless specifically approved by the ERL Project Leader. ERL operations personnel shall adopt the practice indicated in DOE-STD-1042-93, Section 4.2, “Guide to Good Practices for Control Area Activities”.	11) Potentially Distractive Material None

GUIDELINE	PERFORMANCE	EXCEPTIONS
1) Control Area Access a) Only for official business b) Restrict access to controls c) Entry allowed by authorized individuals	1) Control Area Access a) The ERL Control Room is limited to those persons on official business only. ERL operations personnel shall adopt the practice indicated in DOE-STD-1042-93, "Guide to Good Practices for Control Area Activities". The ERL control room has clear boundaries of walls and glass doors. b) Only trained ERL operations personnel and system specialists may manipulate controls and be unsupervised. Physicists may perform accelerator studies using a formal procedure, checklists and authorizations, see OPM 2.11, "Conduct of Operations for Accelerator Physicists and Systems Specialists." c) Authorized entry to ERL Control Room is under the purview of the ERL Shift Leader. See DOE-STD-1042-93, "Guide to Good Practices for Control Area Activities". All areas that are controlled for access are locked, and keys are issued only to trained and qualified personnel. Locks for primary areas are controlled electrically and the Access Control System automatically disables key access when beam is enabled.	1) Control Area Access None
2) Professional Behavior a) Prohibit distraction	2) Professional Behavior a) Professional behavior is encouraged at all times. Potentially distracting activities are generally prohibited; the ERL Shift Leader is the arbitrator. See DOE-STD-1042-93, "Guide to Good Practices for Control Area Activities"	2) Professional Behavior None
3) Monitoring the Main Control Panels a) Take action to determine cause of abnormalities b) Provide backup to computer control systems	3) Monitoring the Main Control Panels a) ERL operations personnel and system specialists are trained to respond to alarms in a timely fashion, taking reasonable actions. For example, see OPM 18.2.2, "ERL Operating Practices," Section 2.7, and OPM 18.6.1, "Responding to Chipmunk Alarms and Interlocks". b) Computer-controlled interlocks are maintained by two separate and independent computer systems. The hard-wired interlock system is dual and independent. The action of hard-wired interlocks is monitored and automatically recorded on a computer. Both the computer-controlled and hard-wired access control systems are maintained on un-interruptable power supplies. All systems fail safe on loss of electrical power.	3) Monitoring the Main Control Panels None

GUIDELINE	PERFORMANCE	EXCEPTIONS
4) Control Room Operator Ancillary Duties a) Limit the ancillary activities of operators b) If appropriate, perform administrative duties away from controls	4) Control Room Operator Ancillary Duties a) Ancillary duties assigned to ERL Operations Personnel do not interfere with their ability to monitor parameters. Reviewing procedures and required reading do not comprise a major portion of shift responsibilities. b) Administrative duties may be performed at operating consoles as long as they do not interfere with the operator's primary duties.	4) Control Room Operator Ancillary Duties None
5) Operation of Control Area Equipment a) Operate only with specific authorization b) Trainees should be supervised	5) Operation of Control Area Equipment a) Only persons specifically authorized by procedure may operate equipment from the ERL Control Room. Authorizations are given by the Accelerator R & D Division management based on meeting the training qualification. See OPM 2.11 "Conduct of Operations for Accelerator Physicists and Specialists." Training records are web-based. b) Trainees are not allowed to work alone at any location including the ERL Control Room unless they are supervised. ERL operator trainees shall adhere to the principles outlined in OPM 2.4, "Operator Trainees."	5) Operation of Control Area Equipment None

GUIDELINE	PERFORMANCE	EXCEPTIONS
1) Emergency Communications Systems a) Provide means to notify personnel of an emergency b) Periodically test emergency communications systems c) Control Area should be able to override the communications systems	1) Emergency Communications Systems a) Emergency signals such as fire or evacuation alarms are audible throughout the C-AD buildings, including ERL, where appropriate. The public address system can be heard throughout the normally occupied areas of the complex. A radio-receiver system is used for site-wide emergency or exigent communications. The C-AD ESHQ Division, secretaries and certain C-AD buildings are supplied with these radio-receivers, which are called plectrons. See OPM 3.0, "Local Emergency Plan for the Collider Accelerator Department," Section 5.2 "Emergency Signals." b) Emergency communications systems are tested weekly. The C-AD emergency drill program is under the purview of the C-AD ESHQ Division, and periodic drills conducted at least annually are used to test all aspects of emergency preparedness. Site-wide drills test the adequacy of site-wide communications systems. c) The C-AD Main Control Room can override the public address system for emergency announcements. See OPM 3.0, "Local Emergency Plan for the Collider Accelerator Department," Section 5.3 "Communications." The public address system is available via telephone to make emergency announcements, and the ERL Control Area may contact the C-AD Main Control Room to make area-wide announcements if necessary.	1) Emergency Communications Systems None
2) Public Address Systems a) Should be administratively controlled b) Includes the use of the paging systems	2) Public Address Systems a) Access to the public address system is through C-AD administrative offices or through the C-A Main Control Room, see OPM 2.12 "Communications Practices" b) The C-AD uses pagers, e-mail and telephones in lieu of the public address system whenever practical. Pagers are issued to individuals and pager numbers are published in the BNL and C-AD phone directory.	2) Public Address Systems None
3) Contacting Operators a) Distinguish between emergency and normal communications	3) Contacting Operators a) ERL Operations Personnel use telephones for communications in order to be in constant contact with the Main Control Room or CAS Watch. See OPM 2.12 "Communications Practices." Language to be used in an emergency is prescribed in C-AD OPM Emergency Procedures, C-AD OPM Chapter 3.	3) Contacting Operators None

GUIDELINE	PERFORMANCE	EXCEPTIONS
4) Radios a) Post areas where use of radios will cause interference with equipment b) Consider the use of dedicated radio channels for specific operations groups	4) Radios a) There are no radio-cast devices in use at C-AD other than communications. However, there are spots where hand-held radios do not receive signals successfully, and these locations are posted. b) Radio channels F1, F2 and F3 are dedicated to C-AD. F1 is for operations and F2 and F3 are for maintenance communications. C-AD can also communicate directly with BNL Fire/Rescue during emergencies via channels F4 and F5. See OPM 2.12, "Communications Practices."	4) Radios None
5) Abbreviations & Acronyms a) Use approved list for written and verbal communications	5) Abbreviations & Acronyms a) Approved acronyms for emergency communications are listed in OPM 3.1, "Emergency Procedure to be Implemented by the Department Emergency Coordinator" and OPM 3.2, "Emergency Procedure to be Implemented by the Local Emergency Coordinator." Specific ERL Emergency Procedures are contained in Chapter 18 of the C-AD OPM.	5) Abbreviations & Acronyms None
6) Oral Instructions & Information Communication a) Should be clear and concise b) Use repeat back techniques to assure accurate communication	6) Oral Instructions & Information Communication a) ERL Operations Personnel are instructed to speak clearly and concisely. See OPM 2.12, "Communications Practices" b) ERL Operations Personnel are trained to repeat information, see OPM 2.12, "Communications Practices"	6) Oral Instructions & Information Communication None

GUIDELINE	PERFORMANCE	EXCEPTIONS
1) Adhere to Training Program a) Program should list requirements for training, and items to be accomplished	1) Adhere to Training Program a) The C-AD adheres to the SBMS Subject Areas for Training and Qualifications for various training requirements. Specific Department policies and requirements for training programs are defined OPM 1.12, "Training and Qualification Plan." Required training needs are identified and documented for all departmental personnel. The development of these needs is a cooperative effort between the individual's supervisor, ESHQ Associate Chair, ESHQ Division Head, and the Training Manager. The training needs may be generic for the various C-A positions and may be specific for the individual or a combination of both.	1) Adhere to Training Program None
2) On-Shift Instructor Qualification a) The qualifications of instructors must be defined	2) On-Shift Instructor Qualification a) ERL training is conducted by qualified personnel. Instructors are selected based upon skills and subject-matter knowledge. Subject matter experts are assigned by C-A management, with the concurrence of the Training Manager, to teach specific courses on the basis of their knowledge of systems and equipment, their experience, and on their academic background. Certification of trainers for specialized courses is made by the agency or organization providing the course certification. Certain Department members are automatically considered qualified to teach courses within their authority. See CA-OPM-ATT 1.12.b, "Instructors Qualified by Department Position or Authority."	2) On-Shift Instructor Qualification None
3) Qualified Operator Supervision & Control of Trainees a) Careful observation of trainees is required b) Instructor should discuss procedure steps in detail c) Instructor should be able to intervene, if required	3) Qualified Operator Supervision & Control of Trainees a) ERL trainees are observed by qualified operators or physicists. ERL operators shall adhere to the principles outlined in OPM 2.4, "Operator Trainees". b) ERL procedure training is via classroom, question and answer forms or by walk-through of the procedure steps with the instructor. c) ERL instructors for ERL Operations Personnel are supervisors, lead personnel and system specialists; and supervisors are trained to intervene or stop work when needed.	3) Qualified Operator Supervision & Control of Trainees None

GUIDELINE	PERFORMANCE	EXCEPTIONS
d) Instructors should verify any recorded readings and discuss the implications of trends and off-normal readings	d) Verifying recorded readings and discussing implications of trends and off-normal readings is part of the training.	
4) Operator Qualification Program a) Program should be approved and any changes reviewed by appropriate management	4) Operator Qualification Program a) The C-AD training and qualification plan is approved by C-AD and BNL managements. ERL operator and physicist tasks at the C-AD are assessed by management, the ESHQ Division, the supervisor and the workers. They assess for duties and responsibilities, competencies, education requirements and environmental, safety or health hazards. Changes to qualification programs are reviewed and approved by C-AD management.	4) Operator Qualification Program None
5) Training Documentation a) Document classroom instruction, written exam, and On-the-Job Training requirements	5) Training Documentation a) Exams, documentation of classroom or on-the-job training programs, and other written training materials are maintained by the C-AD Training and Procedures Manager or are automatically tracked via BTMS.	5) Training Documentation None
6) Suspension of Training a) If an abnormal or emergency condition occurs training should be suspended	6) Suspension of Training a) Operation of ERL equipment by operator/physicist-trainees is suspended when necessary to ensure safe and reliable operation of the ERL, see OPM 3.1, "Emergency Procedures to be Implemented by the Department Emergency Coordinator", Section 5.7.	6) Suspension of Training None
7) Maximum Number of Trainees a) Set limits for number of students and the ratio of instructors to trainees	7) Maximum Number of Trainees a) The maximum and minimum number of trainees allowed to simultaneously participate in training is considered for each training course.	7) Maximum Number of Trainees None
8) Use of Trainees to Support Operations a) Document how and when trainees can be used	8) Use of Trainees to Support Operations a) The use of trainees to support operations is documented in OPM 2.4, "Operator Trainees", Section 2.2. ERL operators shall adhere to the principles documented in the procedure.	8) Use of Trainees to Support Operations None

GUIDELINE	PERFORMANCE	EXCEPTIONS
1) Events Requiring Investigation a) Establish criteria for when to perform an investigation	1) Events Requiring Investigation a) Criteria for when to perform an investigation are given in OPM 10.1, "Occurrence Reporting and Processing of Significant Operations Information", OPM 9.4.5, "C-A Accident/Incident Investigation," and SBMS Subject Areas Occurrence Categorizer's Procedure and Investigation of Incidents, Accidents and Injuries. An on-duty ORPS Categorizer is available at all times by calling 631-433-0443.	1) Events Requiring Investigation None
b) List specific events requiring investigation	b) Specific events requiring investigation at the C-AD are defined in the Subject Area and the ORPS Categorizer's Procedure. Categorizers are trained to assist managers in determining the need to classify and criteria used. Events requiring investigation in accordance with DOE Orders are identified in SBMS Subject Areas Occurrence Categorizer's Procedure and Investigation of Incidents, Accidents and Injuries.	
c) Establish criteria for a "near miss" situation	c) Criteria for a near miss are given in OPM 10.1 and in the Occurrence Categorizer's Procedure administered by the Quality Management Office.	
d) The following events require investigation: i) Violation of design limits ii) Unusual, abnormal, or unexplained performance or safety conditions iii) Improper positioning of safety system features iv) Unexplained shutdown v) Violation of a procedure or human error which could have serious implications vi) Failure of equipment with safety implications vii) Exceeding radiological or toxic substance limits	d) OPM 10.1 , OPM 9.4.5 and the Occurrence Categorizer's Procedure establishes the following as events requiring investigation: i) Violation of design limits ii) Unusual, abnormal or unexplained performance or safety conditions iii) Improper positioning of safety system features iv) Unexplained shutdown v) Violation of a procedure or human error which could have serious implications vi) Failure of equipment with safety implications vii) Exceeding radiological or toxic substance limits	

GUIDELINE	PERFORMANCE	EXCEPTIONS
viii) Actual or attempted sabotage ix) Review committee deems an investigation is necessary x) Loss of Special Nuclear Material xi) Occurrence of repetitive problem	viii) Actual or attempted sabotage ix) Whenever a review committee deems an investigation is necessary x) Not applicable at ERL xi) Occurrence of repetitive problem	
2) Investigation Responsibility a) Manager has ultimate responsibility for consistency and thoroughness of event investigation	2) Investigation Responsibility a) The C-AD Department Chairman is named the C-AD Facility Manager and has the ultimate responsibility to conduct a consistent and thorough investigation, see OPM 10.1 , "Occurrence Reporting and Processing of Significant Operations Information"	2) Investigation Responsibility None
3) Investigator Qualification a) Investigators should be knowledgeable with no vested interest or bias b) Investigators should be trained	3) Investigator Qualification a) BNL staff members from the ESHQ Directorate and other BNL technical experts are available to assist the C-AD subject matter experts in investigations. The Occurrence Reporting and Processing System (ORPS); Investigation of Incidents, Accidents and Injuries; and Critiques subject areas provide guidance for responsible investigators. This team approach helps ensure an unbiased investigation. b) Trained investigators are appointed to investigation committees	3) Investigator Qualification None
4) Information to be Gathered a) Collect the following information as soon as possible: i) Initial condition of facility ii) Statements of operators and other personnel iii) Logs and computer printouts iv) Other pertinent documents	4) Information to be Gathered a) The initial actions by the Operators, Physicists and System Specialists are to take any actions necessary to make the area safe without endangering the health and safety of themselves or other personnel. The Occurrence Reporting and Processing System (ORPS); Investigation of Incidents, Accidents and Injuries; and Critiques Subject Areas detail these requirements. Initial information collection requirements include: i) A record of date and time of the event, date and time of all notifications and initial condition of the facility ii) A record based on operator/physicist statements regarding a step by step sequence of events leading to the incident if known. iii) Logs and computer printouts that are retrievable after an event. iv) Pertinent documents that are preserved in ERL logbooks or binders for future reference.	4) Information to be Gathered None

GUIDELINE	PERFORMANCE	EXCEPTIONS
5) Event Investigation a) Depending on their significance the format should include: i) Event Reconstruction (1) Develop chronological list (2) Include list of personnel involved ii) Event Analysis and Evaluation (1) Determine the response of equipment and personnel (2) Compare actual and expected responses (3) Determine adequacy of procedures and factors effecting performance (4) Compare event with prior events (5) Perform analysis to determine any detrimental effects that have occurred iii) Root-Cause Determination (1) Define casual factors that, if corrected, would preclude recurrence iv) Corrective Action Determination (1) Determine actions (2) Assign responsibility to implement the corrective actions. (3) Obtain final approval by Facility Manager. Can Include: (a) Changes in procedures (b) Training (c) Design Modifications (d) Change in administrative controls	5) Event Investigation a) The standard methods in Occurrence Reporting and Processing System (ORPS) ; Investigation of Incidents, Accidents and Injuries ; Critiques and Corrective and Preventive Action Subject Areas are used. i) These standard methods include event reconstruction ii) These standard methods include event analysis and evaluation iii) These standard methods include root cause determination iv) These standard methods include corrective action. Responsibilities to implement the corrective actions are formally assigned and approved by the Facility Manager, who is the C-AD Chair. The corrective actions are entered into the BNL Action Tracking System (ATS)	5) Event Investigation None.
6) Investigative Report a) Report should include: i) Description of the event	6) Investigative Report a) The C-AD uses the DOE ORPS reporting system and the requirements for Events/Issues Management in SBMS. Critiques are used for all events	6) Investigative Report None

GUIDELINE	PERFORMANCE	EXCEPTIONS
ii) Impact of the event iii) Root causes of the event iv) Lessons learned from the event v) Proposed corrective actions vi) Any positive aspects of the event (correct actions taken or planned) b) The report should have the appropriate reviews and approvals	including those not meeting the ORPs thresholds for reporting to DOE. All corrective actions are tracked in the BNL or C-AD ATS. The format for reports follows requirements in the SBMS Subject Areas on Occurrences and Events/Issues Management. The ORPs form includes the topics listed in this Conduct of Operations guideline. b) ORPs reports and critiques require appropriate reviews and sign-offs as indicated in the relevant subject areas	
7) Event Training a) Provide a mechanism to train personnel on aspects of the event in a timely fashion	7) Event Training a) Corrective actions requiring training are tracked by the BNL or C-AD ATS and are closed out during the first available training evolution, if practical. For corrective actions requiring immediate implementation, changes to procedures and appropriate training are performed prior to restart of the effected facility. Department personnel are informed on events through event and/or facility specific training and weekly meetings with C-AD Divisions. Relevant "Lessons Learned" information is provided to C-AD personnel via the C-AD and/or BNL Lessons Learned Coordinator.	7) Event Training None
8) Event Trending a) Track patterns of deficiencies, such as operator errors and inadequate procedures. b) Keep a summary of all events for review.	8) Event Trending a) The C-AD trends events and occurrence reports as part of its Performance Indicator Program. Annually, events and occurrence report experience is reviewed with C-AD and BNL management at the Environmental Management, OSH management and Self Assessment Review. b) Archival ORPS reports and critiques may be found at C-AD Critiques and C-AD ORPs Reports. ORPs reports are also maintained at the DOE website, Occurrence Reporting & Processing System (password required).	8) Event Trending None

GUIDELINE	PERFORMANCE	EXCEPTIONS
9) Sabotage a) There should be an immediate investigation to: i) Ensure operability of safety systems ii) Decide if facility should be shutdown b) Minimize any impact of discovered sabotage and determine future actions	9) Sabotage a) Sabotage events are investigated by the BNL Safeguards and Security Division who may be reached at 2222 or 911 for emergencies and 2238 for non-emergencies. C-AD supports the investigation to the extent requested by BNL Safeguards and Security Division and DOE. b) ERL Operations Personnel are trained to minimize the impacts of events including sabotage. BNL Safeguards and Security Division is notified of any suspected or actual sabotage event as soon as it is discovered.	9) Sabotage None

GUIDELINE	PERFORMANCE	EXCEPTIONS
1) Notification Procedures a) Notification procedures should include: i) Designation of specific responsibilities for notifications ii) Identification of events and conditions requiring notifications iii) Identification of primary and alternate personnel to notify in various situations iv) Establishment of time requirements for notifications v) Definition of record-keeping requirements	1) Notification Procedures a) Notification procedures are as follows: i) Specific responsibilities for notifications at the C-AD are designated in procedures. For example, OPM 10.1, "Occurrence Reporting and Processing of Significant Operations Information" and the principles outlined in OPM 2.8, "Shift Turnover" as well as DOE-STD-1038-93. ERL Shift Leaders shall signify that they are cognizant of facility operations and prepared to assume responsibility for operations by entering into the ERL log the name of the shift leader assuming responsibility. ii) Events and conditions requiring notifications at the C-AD are specified in procedures. For example OPM 10.1 and OPM 2.8. iii) The identities of primary and alternate personnel to notify in various situations are specified in procedures. For example, OPM 10.1 and OPM 3.0.a, "Emergency Call –Down List." iv) The establishment of time requirements for notifications is specified in OPM 10.1. v) Record-keeping requirements are defined in OPM 10.1 for occurrences and OPM 13.4.1, "Records Management" for all C-AD records.	1) Notification Procedures None
2) Notification Responsibility a) Operations supervisor has ultimate responsibility for notifications	2) Notification Responsibility a) The on-duty ERL Operations Personnel or the appropriate C-AD supervisor has the responsibility for notifications, see OPM 10.1.	2) Notification Responsibility None
3) Names & Phone Numbers a) Include primary and alternate names with phone numbers and pager numbers in a readily accessible place	3) Names & Phone Numbers a) The call list is maintained for the C-AD Department in OPM 10.1.a, "Occurrence Notification Call List" and OPM 3.0.a.	3) Names & Phone Numbers None
4) Documentation a) Maintain record of notifications	4) Documentation a) The C-AD notifications for occurrences are maintained in ORPS records. Also, C-AD maintains records of notifications in operations logs.	4) Documentation None

GUIDELINE	PERFORMANCE	EXCEPTIONS
5) Communication Equipment a) Provide adequate equipment to address communication requirements	5) Communication Equipment a) The C-AD has teleconference, video-conference, radios, plectrons, public-address systems, internet, modems, fax, e-mail, wireless phone, beeper, and standard phone services.	5) Communication Equipment None

GUIDELINE	PERFORMANCE	EXCEPTIONS
1) Status Change Authorization and Reporting a) Operations supervisor is responsible for proper configuration and any changes b) Operations Supervisor must be the focal point of shift operations c) Authority for some minor changes may be delegated, but Operations Supervisor should remain informed d) Good communication should be maintained between Operators and Operations Supervisor e) Status changes should have the proper authorization and should be communicated to the operators	1) Status Change Authorization and Reporting a) Authorization is defined in OPM 1.1 "Authorization." The ERL Operations Coordinator is responsible for proper configuration and any changes. b) The ERL Shift Leader is the focal point for daily operations; see OPM 18.2.2, "Operating Practices for ERL". c) Shift organizations have authority for changes; however, the ERL Operations Coordinator is kept informed. ERL Operations Personnel are required to document changes to accelerator devices in the ERL Operations Log, see OPM 1.2, "C-AD Documents," and in computer generated reports. ERL changes are documented per the guidelines established in OPM 2.7, "Logkeeping" and DOE-STD-1035-93, "Guide to Good Practices for Logkeeping". d) ERL Operations Personnel are located together in the ERL Control Room to ensure information flow. A communication protocol between the C-AD MCR, Cryogenic Watch, System Experts, CAS and the ERL Control Room has been established. e) Individuals who authorize status changes report these changes to the ERL Control Room. For example, see OPM 18.2.2, "Operating Practices for ERL".	1) Status Change Authorization and Reporting None

GUIDELINE	PERFORMANCE	EXCEPTIONS
2) Equipment & Systems Alignment a) Check systems for proper alignment before placing them in operation b) Use alignment checklists to aid operators c) Include the proper nomenclature in the checklists, and have lists signed off at each step d) Check equipment in accordance with technical specifications and operational limits for start-up situations and after maintenance e) Maintain checklists for review and analysis	2) Equipment & Systems Alignment a) Initial system alignment checklists are given in OPM Chapter 18. Radiation Safety Check-off Lists, OPM 9.1.2, are used to ensure outstanding radiation safety issues are closed out prior to operations. Experimental Safety Committee and Accelerator Safety System Committee Check-off Lists, OPM 9.2.4 and OPM 9.3.2, are used to ensure outstanding conventional safety issues are closed out prior to experiment or accelerator system startup. ERL equipment configuration is recorded in logbooks per procedures in OPM Chapter 18. b) Checklist for specific equipment and tasks are documented in OPMs. Search the operations procedures for checklists, aids, lists, etc. c) ERL Operations Personnel use the proper nomenclature for the accelerator complex. Terminology is found in OPM 1.2, "Documents," and used in procedures such as those found in OPM Chapter 18, and in OPM Chapter 4, "Access Security Procedures." Sign-off steps are included. d) Accelerators do not employ "technical specifications" like nuclear facilities but have similar requirements in "Accelerator Safety Envelopes"; there are permissible operating ranges for specific certified equipment; for example, OPM 9.2.3, and the C-AD operates within ASE requirements which are translated into OPMs in OPM 2.5.6. Operational Safety Limits are reviewed periodically and when major changes are proposed to the ERL configuration or operations. e) Records of initial ERL system alignments are maintained for review and analysis by the ERL Operations Coordinator.	Equipment & Systems Alignment None
3) Equipment Locking and Tagging a) All personnel should have training on responsibilities for locking and tagging and on manipulation of locks and tags	3) Equipment Locking and Tagging a) Equipment locking and tagging are covered for example in OPM 2.36, "Lock and Tag Program for Control of Hazardous Energy," OPM 18.11.1, "Lockout/Tagout Procedure for Personnel Entry into the ERL," OPM 18.11.2, "Lockout/Tagout Procedure for the ERL During Accelerator Operations," and OPM 9.1.16 "Lockout/Tagout For Radiation Safety." All appropriate ERL personnel have been trained in these procedures. These procedures are consistent with SBMS requirements. All appropriate persons have been trained in these standards.	3) Equipment Locking and Tagging None

GUIDELINE	PERFORMANCE	EXCEPTIONS
4) Operational Limits Compliance a) Compliance with operational limits should be documented b) Documentation should include logs, status sheets, and checklists c) Operations personnel should be apprised of requirements of operational limits d) Compliance with limit should be reviewed	4) Operational Limits Compliance a) Operational safety limits (OSL) have been established and documented in procedures (OPM Chapter 2). b) Logs, status sheets, and checklists are used to help ensure compliance. Search the operations procedures for checklists, logs, status sheets, etc. c) ERL Operations Personnel, Access Controls Groups, and other relevant ERL support personnel are trained in the ERL ASE procedure. d) Compliance with specific limits is reviewed; e.g., the ASE for energy flux is tracked periodically. Periodic management assessments (OPM 13.10.1, "Independent Assessment") are also used to review compliance with the ASE.	5) Operational Limits Compliance None
5) Equipment Deficiency Identification & Documentation a) Methods to identify, document, communicate, and control deficiencies should be established.	5) Equipment Deficiency Identification & Documentation a) Equipment deficiencies are identified and communicated via the ERL Logbook per OPM 2.7. Controlling equipment deficiencies is via use of Lock-out Tag-out or Do Not Operate Tags, and both these control systems are covered by written procedures. ERL equipment problems, which do not impact the complex, are documented as defined in OPM 12.10, "Operations Reporting and Log Books."	5) Equipment Deficiency Identification & Documentation None
6) Work Authorization and Documentation a) Operations Supervisor should document and authorize all activities which effect operations, safety, or change the control of alarms b) Documentation of work in progress should be available for review	6) Work Authorization and Documentation a) Permit systems for activities affecting fire alarm, fire protection, radiation safety, radiation alarms, access control, ODH hazard control, digging, enhanced work control, welding and cutting and electrical safety are in use at C-AD. The Maintenance Coordinator, working with the ERL Operations Supervisor documents scheduled maintenance activities and operations personnel are notified. All work is documented in formal work control system. See OPM 2.28, "Work Planning and Control for Operations" and OPM 2.29, "Procedure for Enhanced Work Planning for Experimenters." b) Work in progress is tracked and documented by Supervisors and the Maintenance Coordinators, and is available for review by looking at local work-control-system records.	6) Work Authorization and Documentation None

GUIDELINE	PERFORMANCE	EXCEPTIONS
7) Equipment Post-Maintenance Testing & Return to Service a) Equipment should be tested after maintenance to demonstrate its proper operation b) Testing should be documented	7) Equipment Post-Maintenance Testing & Return to Service a) Equipment is returned to service in accord with procedures and work controls. Post-maintenance testing and return-to-work formalities are documented for safety significant structures, systems and components. The alarm panel lights are periodically tested for all consoles in the ERL Control Room. Deficiencies are repaired prior to operations. b) Testing is documented in accordance with applicable procedures and work controls.	7) Equipment Post-Maintenance Testing & Return to Service None
8) Alarm Status a) Status and control and alarm panels should be available and include information on: b) Alarms which have been disabled c) Inputs which have been disabled d) Alarms with set-point changes e) Actions of alarms with multiple inputs f) Appropriate actions should be taken to unmask simultaneous alarms from multiple sources	8) Alarm Status a) The ERL Control Room is arranged such that there are appropriate control consoles for operations, monitoring and recording the actions of the access-control and fire alarm systems. The status of radiation monitor alarms is readily available to all operations personnel from any console. Similar controls and alarm panels are in the CAS Building. b) Critical alarms cannot be disabled, or set points changed, by operations personnel. c) Radiation monitor alarm inputs may not be disabled by operators, and if disconnected an alarm sounds. d) Safety related audible alarms cannot be adjusted to different set points or different sound levels. e) Actions by ERL operators in response to multiple radiation monitor alarms are documented in OPM 18.6.1, “Responding to Chipmunk Alarms and Interlocks. f) Simultaneous alarms are unmasked by the system and multiple radiation-monitor alarms are conspicuous.	8) Alarm Status None

GUIDELINE	PERFORMANCE	EXCEPTIONS
9) Temporary Modification Control a) Provide administrative controls for temporary changes in configuration and procedures	9) Temporary Modification Control a) Administrative controls for temporary modifications are the norm. ERL is constantly under development since it is an R&D accelerator system. Safety significant systems, for example, are modified according to OPM Chapter 4, "Access Security Procedures." Non-safety systems are modified according to quality assurance procedures in the OPM Chapter 13. A temporary procedure system and a hand-processed procedure-change system are used to control changes to existing procedures.	9) Temporary Modification Control None
b) Controls should provide the following: i) Technical oversight	b) Formal controls and procedures provide the following: i) Technical oversight is provided via reviews conducted by the Chief Engineers, the Radiation Safety Committee, the Experimental Safety Review Committee, the Accelerator Systems Safety Review Committee, the ALARA Committee and the system experts.	
ii) Formal approvals	ii) Formal approval systems are used such as the Radiation Safety Checkoff List (OPM 9.1.2), Experimental Safety Checkoff List (OPM 9.2.4), or Certification by Chief Engineers (OPM 9.2.3).	
iii) Safety reviews	iii) Safety and environmental protection reviews are performed as follows: The Accelerator Systems Safety Review Committee reviews new accelerator systems. The Experimental Safety Review Committee reviews experiments. The BNL Cryogenic Safety Committee reviews cryogenic systems. All major operations and experiments are reviewed for radiation protection by the Radiation Safety Committee and for dose reduction by the ALARA Committee. NEPA reviews are performed according to SBMS requirements and specific jobs are reviewed for safety via the work planning program.	
iv) Installation approval	iv) Experiments are approved by the Department Chair prior to each running period. See OPM 9.2.4, "Procedure for Preparing an ESRC Checkoff List and for Assuring Recommendations are Completed." The ERL Operations Supervisor and the Head of the Collider Accelerator Support Group, prior to initial startup, approve new accelerator systems.	
v) Independent verification of installation or removal	v) Independent verification of installation or removal of the access control system or shielding is performed by the Radiation Safety Committee. Fire alarm/protection system installation and removal is controlled by BNL support organizations. The Chief Electrical Engineer or his designate independently verify electrical safety systems such as Kirk	

GUIDELINE	PERFORMANCE	EXCEPTIONS
	Keys.	
vi) Documentation of modification	vi) Documentation associated with modifications is retained in accord with OPM procedures.	
vii) Updating of operating procedures	vii) Updating of temporary operating procedures is controlled in OPM 1.4.4, "Procedure for Implementing or Canceling Temporary Procedures".	
viii) Training in modifications	viii) Training requirements are defined in the temporary procedure itself.	
ix) Periodic audits of outstanding modifications	ix) Temporary procedures are reviewed by the ERL Operations Coordinator, and are removed or converted to permanent procedures. The Radiation Safety Committee periodically reviews temporary modifications to safety significant equipment, such as interlock bypasses.	
10) Distribution & Control of Equipment & Systems Documents a) Provide system for distribution of controlled documents	10) Distribution & Control of Equipment & Systems Documents a) OPM Chapter 1 procedures, OPM 13.6.2, "Configuration Management" and OPM 13.4.1, "Records Management" provide for control of plans, procedures, engineering specifications and drawings.	10) Distribution & Control of Equipment & Systems Documents None

GUIDELINE	PERFORMANCE	EXCEPTIONS
1) Lockout/Tagout Use a) Definitions b) Lockout is the placement of a lock to render a device inoperable c) Tagout is the application of a warning device on a control indicating the control must not be used when the tag is removed by authorized persons d) Use of keys should be controlled	1) Lockout/Tagout Use a) SBMS Subject Areas Electrical Safety and Lockout/Tagout provides definitions for use of Lockout and Tagout devices. C-AD procedures OPM 1.5, "Electrical Safety Implementation Plan," and OPM 2.36, "Lock and Tag Program for Control of Hazardous Energy" comply with these BNL Standards. b) Lockout at C-AD is the placement of a lock to render a device inoperable. c) Tagout at C-AD is the application of a warning device on a control. d) Lockout keys are controlled as indicated in OPM 2.36.	1) Lockout/Tagout Use None
2) Lockout and Tagout Implementation a) If an isolating device can be locked out, then it should be locked out b) If an isolating device can not be locked out, it should be tagged out c) If major modifications to equipment are made, the addition of lock out capability should be considered d) The following are example administrative controls: i) Generate a list of devices that must be locked out ii) Establish criteria for locking out iii) Control the distribution of and access to keys	2) Lockout and Tagout Implementation a) The C-AD uses locks wherever locks can possibly be applied, or where locks can be retrofitted for the purpose of isolating devices. b) Tagouts are used at C-AD if a device cannot be locked out. c) New and modified installations are fitted with lockouts in accord with SBMS requirements. See OPM 2.36, "Lock and Tag Program for Control of Hazardous Energy", section 5.2.7. d) The C-AD uses the following administrative controls: i) Lists of devices that must be locked out. See OPM 2.36, "Lock and Tag Program for Control of Hazardous Energy". ii) Written criteria for lockout. See, for example, OPM 9.1.16, "Lockout / Tagout for Radiation Safety." iii) Controls for the distribution and access of keys. See OPM 2.36.	2) Lockout and Tagout Implementation None

GUIDELINE	PERFORMANCE	EXCEPTIONS
iv) Specify techniques for verifying the position of locked components v) Document when the position of normally locked component is changed vi) Perform periodic checks of locked components	iv) Care is taken to employ only the proper test equipment to verify that the system is safe; only persons trained to use test equipment conduct the verification. See SBMS Subject Area, Lockout/Tagout. v) Documentation is associated with specific lockout and tagout procedures. See OPM 2.36, "Lock and Tag Program for Control of Hazardous Energy". vi) The requirements for periodic checks are given in OPM 1.5, "Electrical Safety Implementation Plan," and OPM 13.10.1, "Independent Assessment." In addition Tickler Card #303 used by the ESHQ Division ensures that annual checks of LOTO are performed as per 29CFR1910.147(c)(6)(i) and (ii).	
3) Protective Materials and Hardware a) Includes locks, tags, and chains b) Lockout and Tagout devices should be singularly identified, and meet the following: i) Able to withstanding the environment in which they are installed ii) Standardized in size, shape, or color iii) Substantial enough to prevent removal (50# pull minimum) iv) Carry the name of the person applying the device v) Carry a "Warning" notice	3) Protective Materials and Hardware a) LOTO materials include standardized locks and tags. See SBMS Subject Area, Lockout/Tagout and OPM 2.36, "Lock and Tag Program for Control of Hazardous Energy." b) Locks and tags are singularly identified, and at C-AD they meet the following requirements: i) Able to withstanding the environment in which they are installed ii) Standardized in size, shape, or color iii) Substantial enough to prevent removal (50# pull minimum) iv) Carry the name of the person applying the device v) Carry a "Warning" notice	3) Protective Materials and Hardware None

GUIDELINE	PERFORMANCE	EXCEPTIONS
4) Lockout/Tagout Program a) Establish procedures for the program	4) Lockout/Tagout Program a) SBMS Subject Areas Electrical Safety and Lockout/Tagout establishes the BNL Lockout/Tagout program requirements for all Departments and Divisions. OPM 1.5, "Electrical Safety Implementation Plan," and OPM 2.36, "Lock and Tag Program for Control of Hazardous Energy", which meet Laboratory requirements, is used by C-AD for Department specific Lockout/Tagout instructions	4) Lockout/Tagout Program None
5) Procedures for Lockout/Tagout a) Procedures should include, but are not limited to following: i) Statement of intended use ii) Specific steps for placing, removing and transferring of tags and locks iii) Testing requirements to verify the isolation of the energy source b) Specific procedures are not required when all the following requirements are: i) Machine has no stored energy after shutdown ii) Machine has a single, easily identifiable energy source iii) Isolation of the source will completely de-energize the machine iv) Machine is isolated from the energy source and locked out v) A single lockout device only is required vi) Lockout is under the exclusive control of authorized personnel	5) Procedures for Lockout/Tagout a) C-AD LOTO-specific procedures. OPM 2.36, "Lock and Tag Program for Control of Hazardous Energy" requires the following: i) Statement of intended use ii) Specific steps for placing, removing and transferring of tags and locks iii) Testing requirements to verify the isolation of the energy source b) Personnel applying LOTO not covered by a specific C-AD procedure follow the BNL procedure in SBMS Subject Area Lockout/Tagout and OPM 2.36, "Lock and Tag Program for Control of Hazardous Energy." These procedures require following the operational guidelines of 5 b) i through 5 b) viii.	5) Procedures for Lockout/Tagout None

GUIDELINE	PERFORMANCE	EXCEPTIONS
vii) Servicing does not create a hazard to other personnel viii) Employer has a good accident record on the use of Lockout/Tagout c) Documentation of Lockout/Tagout Usage should be documented and periodically reviewed	c) Documentation of lockouts and tagouts is via LOTO logbooks which are periodically reviewed by supervisors. See OPM 1.7, "Supervisory Practice for Working with Hazards," and OPM 13.10.1, "Independent Assessment." In addition Tickler Card #303 used by the ESHQ Division ensures that annual checks of LOTO are performed as per 29CFR1910.147(c)(6)(i) and (ii).	
6) Application of Lockout/Tagout a) The program should cover the following procedures: i) Preparation for Shutdown (1) Inform affected personnel of hazards and of controls to be used ii) Machine or Equipment Shutdown (1) Use established procedures iii) Equipment Isolation (1) Apply the lockout or tagout device iv) Affixing Locks/Tags (1) Securely affix tags with qualified personnel v) Stored Energy (1) Render safe any stored energy and prevent any re-accumulation vi) Verification of Isolation	6) Application of Lockout/Tagout a) The C-AD has formal programs and procedures to: i) Prepare for Shutdown (1) Personnel are informed during scheduled weekly meetings of hazards and controls to be used in a shutdown. See OPM 2.28.a, "C-A Weekly Meetings Diagrams and Table." ii) Machine or Equipment Shutdown (1) See OPM 2.36, "Lock and Tag Program for Control of Hazardous Energy". iii) Equipment Isolation (1) C-AD has specific LOTO procedures to isolate specific devices. See OPM 2.36, "Lock and Tag Program for Control of Hazardous Energy". iv) Affix Locks/Tags (1) Only trained and qualified personnel are allowed to affix LOTO tags. See OPM 1.5, "Electrical Safety Implementation Plan," and OPM 2.36, "Lock and Tag Program for Control of Hazardous Energy" v) Stored Energy (1) Stored energy is rendered safe. For example, large vacuum windows are covered prior to work on or near the window and capacitors are shorted to prevent re-accumulation of energy. vi) Verification of Isolation	6) Application of Lockout/Tagout None

GUIDELINE	PERFORMANCE	EXCEPTIONS
(1) Before starting work, verify isolation of the device	(1) Personnel are trained to verify isolation of devices before work begins. See SBMS Subject Area Lockout/Tagout and OPM 2.36, "Lock and Tag Program for Control of Hazardous Energy".	
vii) Release from Lockout/Tagout (1) Before restoring equipment, perform the following:	vii) Release from Lockout/Tagout (1) Before restoring equipment, personnel are trained in SBMS Subject Area Lockout/Tagout and OPM 2.36, "Lock and Tag Program for Control of Hazardous Energy" to ensure:	
(a) Equipment/Workspace (i) Machine or equipment is operationally intact	(a) Equipment/Workspace (i) Machine or equipment is operationally intact.	
(ii) Inspect area and remove non essential items	(ii) The area is inspected and non-essential items are removed.	
(iii) Person removing the tag/lock should assure that the equipment is properly aligned	(iii) The equipment is properly aligned.	
(b) Personnel (i) Check that affected personnel are safe and are informed of energization	(b) Personnel (i) That affected personnel are safe and are informed of energization.	
(c) Lockout/Tagout Device Removal (i) The person who applied the isolation device shall be the one to remove it	(c) Lockout/Tagout Device Removal (i) That the person who applied the isolation device is the one to remove it.	
(ii) Document removal of tag via logbook or other methods	(ii) That removal of tags is documented.	

GUIDELINE	PERFORMANCE	EXCEPTIONS
(d) Procedures for removal by a person other than who placed the device: (i) Verify that the person who placed device is not available (ii) Make reasonable efforts to inform the person who placed the device that it has been removed (iii) Ensure that the affected personnel are informed	(d) Procedures such as OPM 2.14, "Removal of Locks and Tags by Others" ensure: (i) That the unavailability of the person who placed device is verified. (ii) That reasonable effort is made to inform the person who placed the device that it has been removed. (iii) That the affected personnel are informed.	
7) Testing or Positioning of Equipment or Components a) When a temporary removal is required: i) Clear the equipment of tools and materials ii) Ensure that personnel leave from the area iii) Remove the lockout/tagout device iv) Perform testing to assure lockout v) De-energize and reapply the lockout/tagout device	7) Testing or Positioning of Equipment or Components a) For temporary removal of LOTO, the specific procedure steps would include the following where appropriate: i) Clear the equipment of tools and materials. ii) Ensure that personnel leave from the area. iii) Remove the lockout/tagout device. iv) Perform testing to assure lockout. v) De-energize and reapply the lockout/tagout device.	7) Testing or Positioning of Equipment or Components None
8) Periodic Inspections a) Perform audit for compliance with program.	8) Periodic Inspections a) C-AD performs self-assessments and audits of its LOTO program. See OPM 1.7, "Supervisory Practice for Working With Hazards". Additionally, the C-AD QA Office performs routine audits of LOTO programs. See OPM 13.10.1, "Independent Assessment" and Tickler Card #303 used by the ESHQ Division which ensures that annual checks of LOTO are performed as per 29CFR1910.147(c)(6)(i) and (ii).	8) Periodic Inspections None
9) Caution Tags a) Do not use for personnel protection	9) Caution Tags a) The use of Do Not Operate Tags and Caution Tags is described in OPM 2.13 "Use of Do Not Operate and Caution Tags for Equipment and Systems:" They are not used for personnel protection.	9) Caution Tags None

GUIDELINE	PERFORMANCE	EXCEPTIONS
b) Tags should show: i) Tag identification system ii) Information on any precautions iii) Signature of person applying the tag c) Keep records of use d) Apply so that the tag does not interfere with operation of equipment	b) Tags show: i) Tag identification system ii) Information on any precautions iii) Signature of person applying the tag c) OPM 2.13 is the record of use. d) Personnel are trained to ensure the tag does not interfere with operation of equipment.	

GUIDELINE	PERFORMANCE	EXCEPTIONS
10) Training and Communication a) Training should include: i) Recognition of hazards ii) Purpose of procedures iii) Recognition of the Tagout/Lockout devices b) Training on limitations of tags: i) Tags are warning device only, with no physical protection ii) Tags should be removed by the person who applied them iii) Tags must be legible iv) Tags must withstand environment v) Tags must be securely attached c) Training on limitation of locks: i) Locks may hinder facility systems necessary for safety d) Retraining: Provide when there is a change in job, equipment, or hazard	10) Training and Communication a) BNL Web Courses (Electrical Safety I and LOTO) and C-AD facility specific training include: i) Recognition of hazards.; ii) Purpose of procedures. iii) Recognition of the Tagout/Lockout devices. b) Personnel are trained on the limitations of tags as follows: i) Tags are warning device only, with no physical protection. ii) Tags should be removed by the person who applied them. iii) Tags must be legible. iv) Tags must withstand environment. v) Tags must be securely attached. c) Training on the limitations of locks is as follows: i) Personnel are trained that locks may hinder facility systems necessary for safety. d) Retraining requirements are as follows: i) C-AD requires retraining whenever there is a change in job classification. C-AD requires specific LOTO training for specific C-AD equipment. Following initial training, individuals are retrained annually to general LOTO requirements and LOTO specific devices. Electrical Safety I retraining is required every two years.	10) Training and Communication None

GUIDELINE	PERFORMANCE	EXCEPTIONS
11) Lockout or Tagout Implementation a) Implementation shall be by authorized, qualified personnel only	11) Lockout or Tagout Implementation a) Implementation is by authorized, qualified personnel only. Trained and qualified personnel are listed in BTMS.	11) Lockout or Tagout Implementation None
12) Notification of Personnel a) Notify appropriate supervisors or other personnel when lockout/tagout devices are applied or removed	12) Notification of Personnel a) LOTO establishes generic notification requirements. C-AD procedures establish specific notification requirements.	12) Notification of Personnel None
13) Outside Contractors a) Plant and contractor personnel should inform each other of their requirements	13) Outside Contractors a) LOTO establishes the responsibilities of visitors and contract employees not under C-AD supervision. Outside Departments working at C-AD are subject to requirements in OPM 1.11 "BNL Departments and Outside Service Provider Requirements for Interaction with C-A." Outside contractors under C-AD supervision and working at C-AD are subject to requirements in C-AD OPM 1.12 "Training and Qualification Plan."	13) Outside Contractors None
14) Group Lockouts a) Procedures must be developed for crews equivalent to procedures for personnel Lockout/Tagout	14) Group Lockouts a) SBMS Subject Area Lockout/Tagout and OPM 2.36, "Lock and Tag Program for Control of Hazardous Energy" establish generic group lockout requirements.	14) Group Lockouts None
15) Shift or Personnel Changes a) Procedures should be developed to assure the continuity of Lockout/Tagout protection between personnel or shifts	15) Shift or Personnel Changes a) SBMS Subject Area Lockout/Tagout and OPM 2.36, "Lock and Tag Program for Control of Hazardous Energy" establish generic shift and personnel change procedures for lockout/tagout. These requirements are included in C-AD procedures.	15) Shift or Personnel Changes None

GUIDELINE	PERFORMANCE	EXCEPTIONS
1) Components Requiring Independent Verification a) Components that ensure safe and reliable operation, as determined by safety analysis, should receive independent analysis in accordance with the following requirements: b) Credited Safety Systems i) Not required if: (1) Mispositioning would not affect the system performance (2) Mispositioning would be immediately known to operator	1) Components Requiring Independent Verification a) Credited safety structures, systems and components at the ERL accelerator complex receive independent analysis in accordance with the following requirements b) Safety-related systems include relay based access control system (ACS), PLC based access control system (PASS), radiation shielding and beam dumps, radiation monitor system and the ODH monitoring system, which are independently reviewed by the C-AD Radiation Safety Committee since mispositioning would affect the system performance. Kirk Key systems for electrical safety and other personal safety are reviewed by the Accelerator Systems Safety Review Committee and the Experimental Safety Review Committee. i) Independent verification is required at C-AD: (1) Fire suppression and alarm systems are acceptance tested by Plant Engineering Fire Alarm Technicians following installation; however, mispositioning of this system does not effect accelerator performance (2) Mispositioning of safety significant systems would not necessarily be apparent to operators or physicists; although indicators for the access control system are displayed in the ERL Control Room. The access control systems have dual, independent and fail safe devices that are used to block beams or switch beams off and independent functional verification of these devices is performed every year by the C-AD Access Controls Group. See, for example, OPM 4.120.220… and 4.120.240…series of procedures for Access Control testing and verification. The position and thickness of shielding and beam dumps is independently verified by fault studies after construction, fault studies that are performed by the C-AD Radiation Safety Committee. See OPM 9.1.9, "Fault Study Procedure for Primary and Secondary Areas." The response of the radiation monitor system is independently verified by the	1) Components Requiring Independent Verification None

GUIDELINE	PERFORMANCE	EXCEPTIONS
	technicians from the Radiological Controls Division assigned to C-AD and the C-AD Access Controls Group prior to each running period see OPM 8.15.4, "Procedure for a Functional Test of the Chipmunk Computer Interface." Kirk Key electrical safety systems are installed and tested under the purview of the Chief Electrical Engineer.	
(3) Independent verification would involve significant radiation exposure	(3) Independent verification does not involve significant radiation exposure at ERL. The accelerator can be shut-down for testing of safety significant systems and testing does not require one to enter areas where there are excessive residual radiation levels.	
c) Non-Safety Related Systems	c) Non-safety related systems where independent verification is appropriate include beam loss monitoring systems, water cooling systems, and cryogenic systems.	
i) Independent verification would be appropriate if mispositioning could lead to unplanned shutdowns, challenges to safety systems, or cause the release of radioactive or hazardous material.	i) Liaison physicists review the response of beam loss monitoring systems during running periods, for example, see OPM 18.6.2, "ALARA Strategies for ERL Tuning" The Water Systems Group monitors cooling systems for leaks. Water detection mats and secondary containments are used, and cooling water system pressures are monitored and alarmed. Response to alarms for water leaks is covered by procedure OPM 10.1, "Occurrence Reporting and Processing of Significant Operations Information." Cryogenic operators monitor system pressures, temperatures and valve positions continuously during operations.	

GUIDELINE	PERFORMANCE	EXCEPTIONS
2) Occasions Requiring Independent Verification a) Returning equipment to service after maintenance b) Removing equipment from service c) Periodic checks during normal operation	2) Occasions Requiring Independent Verification a) Equipment startup procedures cover check out or start up of systems. See, for example, OPM 18.8.1.2, Procedure for Turning on the 50 KW RF Amplifier in RF, OPM 18.5.4, Procedure for Transporting a Grown Bi-Alkali (K2CsSb) Cathode and Its Assembly into the ERL SRF Gun, OPM 18.7.4, ERL & VTF Cryogenic System Operation, and OPM 18.8.2.3, Procedure for Operating the Vacuum Systems of the ERL SRF e-Gun and Cathode Transport Cart. b) Equipment shutdown procedures include, for example, OPM 18.7.4, section 6.3, ERL & VTF Cryogenic System Operation. At times, independent verification of an RSLOTO is required. See OPM 9.1.16, "Lockout/Tagout for Radiation Safety." c) Periodic checks during normal operations are made by the Operators and Physicists assisted by CAS Watch personnel and by the Radiological Control Technicians.	2) Occasions Requiring Independent Verification None
3) Verification Techniques - General Guidelines a) Independence i) Should be conducted in a manner to identify the component, its required position and actual position b) Remote Position Indicators i) Perform check local to the device, unless precluded by ALARA c) Process Parameters	4) Verification Techniques - General Guidelines a) Independence i) Specific examples of independent verification techniques may be found throughout the OPMs. For example, see attachments to procedure OPM 2.36, "Lock and Tag Program for Control of Hazardous Energy." b) Remote Position Indicators i) Position indicators are checked local to the device. For example, access control gates are reset locally after an area is swept clear of people in order to enable the access control system to allow beam into the ERL accelerator. c) Process Parameters	5) Verification Techniques - General Guidelines None

GUIDELINE	PERFORMANCE	EXCEPTIONS
i) Should not be used as the only indication of a component's position. A review should be made to determine when these parameters would be acceptable	i) Process parameters, such as radiation monitor set points for alarm in the ERL Control Room or for interlocking the beam, are reviewed by C-AD Radiation Safety Committee. See OPM 8.15.3, "Chipmunk Radiation Monitors." Other safety significant parameters are reviewed by Chief Engineers; see OPM 9.2.3, "Procedure for Chief Engineers to Certify Conformance of Devices."	
d) Throttled Valves i) Position indicators should be used in conjunction with observing the actions of valve actuator to proper verification	d) Throttled Valves i) Position indicators are used in conjunction with observing the actions of valve actuators; for example, see OPM 18.7.4, "ERL & VTF Cryogenic System Operation".	
e) Surveillance Testing i) Independent verification should be used only when proven to satisfy independent verification requirements	e) Surveillance Testing i) C-AD programs satisfy BNL institutional requirements in SBMS Integrated Assessment	
f) Operation Self-Appraisal and Verification i) Should be performed periodically to ensure that the ES&H considerations, and operations functions are being conducted in accordance with established criteria	f) Operation Self-Appraisal and Verification i) Operation self-appraisal and verification are performed periodically; see OPM 13.10.1, "Independent Assessment."	

GUIDELINE	PERFORMANCE	EXCEPTIONS
1) Establishment of Operating Logs a) Logs should be established for all key control points including operations supervisor, and control room operator b) Provide narrative sections on round sheets when logs are not used at a particular control point	1) Establishment of Operating Logs a) Logs are maintained for all key positions, See OPM 1.2, "C-AD Documents." Also see the Accelerator Division Operations Web. b) Narrative sections are provided on round sheets where appropriate. For example, see OPM 18.4.2, "ERL Experimental Area Sweep Checklist."	1) Establishment of Operating Logs None
2) Timeliness of Recordings a) Log information should be recorded as soon as possible to prevent inaccuracies.	2) Timeliness of Recordings a) Operations logbooks are completed as events progress but in no case later than the end of each shift see the guidelines of OPM 2.7, "Logkeeping" and DOE-STD-1035-93, "Guide to Good Practices for Logkeeping", Section 4.	2) Timeliness of Recordings None
3) Information to be Recorded a) Provide written guidance to define the type, scope, and format of entries b) Minimum information required: i) Changes in facility operating mode or condition ii) Record of critical data iii) Abnormal facility configurations iv) Status changes in safety-related or important equipment v) Occurrences of reportable events vi) Initiation and completion of surveillance tests vii) Actions that breech operational safety limits	3) Information to be Recorded a) Information to be recorded is identified in OPM 2.7, "Logkeeping" and DOE-STD-1035-93, Section 4. b) Minimum information required in OPM 2.7 and DOE-STD-1035-93, Section 4 is: i) Changes in ERL accelerator operating mode or condition ii) Record of critical accelerator data and shift summaries iii) Abnormal accelerator or experimental area configurations iv) Status changes in safety-related or important equipment such as access control system changes v) Occurrences of reportable events vi) Initiation and completion of accelerator tests vii) Actions that breech operational safety limits	3) Information to be Recorded None

GUIDELINE	PERFORMANCE	EXCEPTIONS
viii) Security incidents ix) Out-of-specification chemistry or process results x) Shift reliefs	viii) Security incidents ix) Out-of-specification process results such as high beam losses x) Shift and personnel changes	
4) Legibility a) Logs must be legible, understandable and suitable for photocopying	4) Legibility a) OPM 2.7, "Logkeeping," indicates that entries are to be legible. ERL operations logs are electronic or 'E-logs' and rules for E-logs are also in OPM 2.7.	4) Legibility None
5) Corrections a) Do not erase or cover up entries; score them out with a single line	5) Corrections a) OPM 2.7, "Logkeeping," indicates that how corrections and edited entries should be handled.	5) Corrections None
6) Log Review a) Logs must be reviewed periodically by supervisors	6) Log Review a) Logbooks, or photocopies, are made readily available and are reviewed each day during operations by supervisors and management. Formal review of logs is periodically performed by the C-AD Q-staff. See OPM 13.10.1, "Independent Assessment."	6) Log Review None
7) Care and Keeping of Logs a) Provide written guidance on the disposition of completed logs: i) Make available for operators returning after an absence ii) Storing for expected life of the facility iii) Retrieving stored logs	7) Care and Keeping of Logs a) Written guidance on the disposition of logbooks is provided in OPM 2.7, "Logkeeping". Since ERL logbooks are electronic, section 2.7.1.1applies and provides for: i) Availability for operators and physicists returning after an absence. ii) Storing for expected life of the ERL. iii) Retrieving stored logs at C-AD.	7) Care and Keeping of Logs None

GUIDELINE	PERFORMANCE	EXCEPTIONS
1) Turnover Checklists a) Checklists should document that the following have been reviewed: i) Equipment checklists showing status, and noting any abnormal lineups or valid alarms ii) Round sheets and logs iii) Operator checklists providing vital information on key operational and safety parameters iv) Operations Supervisory Checklists showing facility status, planned maintenance, and tests	1) Turnover Checklists a) Checklists document many parameters that are reviewed after a specific evolution. These checklists generally relate to turnover of a system for routine operations as opposed to shift turnover: i) Equipment checklists showing status, and noting any abnormal lineups or valid alarms; for example, see OPM 18.4.1.a, "ERL Experimental Area Sweep Checklist" ii) Round sheets and logs; for example, see the ERL_stay elog. iii) Operator checklists providing vital information on key operational and safety parameters; for example, see OPM 9.1.2, "Procedure for Preparing and Maintaining an RSC Check-Off List and Assuring that RSC Recommendations are Completed" iv) Facility status is documented using operations logs and turnover briefings. See ERL logkeeping guidelines as established in OPM 2.7, "Logkeeping" and DOE-STD-1035-93, "Guide to Good Practices for Logkeeping", Section 4. Also, see the principles outlined in OPM 2.8, "Shift Turnover". In addition, elogs such as the ERL_stay documents facility status.	1) Turnover Checklists None
2) Document Review a) A review of documents and checklists, as required, should be made to ensure that the operators review and understand the important operations history, the present status of the equipment, and any planned events.	2) Document Review a) Shift turnovers include a thorough review of appropriate documents describing important aspects of accelerator status, and some shift turnovers may include a review of a checklist if relevant to operations or ESH. Reviews are complimented by a discussion between the off-going and oncoming operators and physicists. For example, see the principles OPM 2.8, "Shift Turnover," and DOE-STD-1038-93, "Guide to Good Practices for Operations Turnover", Section 4.	2) Document Review None

GUIDELINE	PERFORMANCE	EXCEPTIONS
3) Control Panel Walkdown a) Walkdown the control panels to determine the plant's status by observing system lineups, switch positions, lighted annunciators, chart recorders, and status lights b) Oncoming and outgoing personnel should review control panels together.	3) Control Panel Walkdown a) Shift turnovers include a thorough inspection of equipment, control systems and appropriate accelerator instrumentation. See OPM 2.8 and DOE-STD-1038-93, Section 4. b) Reviews are complemented by a discussion between the off-going and oncoming operators and physicists. See OPM 2.8 and DOE-STD-1038-93, Section 4.	3) Control Panel Walkdown None
4) Discussion and Exchange of Responsibility a) When all operations personnel are confident that the oncoming personnel are fully cognizant of plant conditions, and conditions are stable, the oncoming operators and supervisor should state that they take responsibility for the shift, and note such in the appropriate log	4) Discussion and Exchange of Responsibility a) The oncoming shift leader and operations staff signify that they are cognizant of the ERL facility operations and are prepared to assume responsibility for operations at the end of the previous shift. See OPM 2.8 and DOE-STD-1038-93, Section 4.	4) Discussion and Exchange of Responsibility None
5) Shift Crew Briefing a) Briefing of operators and support groups, as required, should be conducted by the Operations Supervisor and include a review of the facility status, equipment problems, and changes in progress or planned changes	5) Shift Crew Briefing a) Any special information required on a particular shift is written in the logbook by the senior person in charge of the group and verbally emphasized during briefings with operators. See OPM 2.8 and DOE-STD-1038-93, Section 4.	5) Shift Crew Briefing None
6) Reliefs Occurring During the Shift a) Relief reviews and walkdowns should be performed as required, depending on the familiarity of the oncoming persons with the current conditions	6) Reliefs Occurring During the Shift a) Exchange of the operators or physicists during a shift is done in a way to ensure that the oncoming person is knowledgeable of the conditions as they would have been had a complete shift turnover process been conducted. See OPM 2.8 and DOE-STD-1038-93, Section 4.	6) Reliefs Occurring During the Shift None

GUIDELINE	PERFORMANCE	EXCEPTIONS
1) Operator Responsibilities a) Operators should be able to recognize out-of-specification process parameters, adverse trends, and be familiar with corrective actions	1) Operator Responsibilities a) Operators and physicists are trained to respond to out-of-specification process parameters and adverse trends. See OPM 10.1, "Occurrence Reporting," and OPM 18.6.1, "Response to Chipmunk Alarms and Interlocks." A call-in-list of system experts is maintained and, if necessary, operators/physicists will shut down the system or the entire program in order to maintain a safe status.	1) Operator Responsibilities None
2) Operator Knowledge a) Operators should be knowledgeable of processes and safety that affect operation and should be able to analyze off-normal situations and take action to correct the causes. Examples of process information include: i) Water pH, and conductivity ii) Hazards associated with chemical storage iii) Properties and hazards of such gases as hydrogen, nitrogen, carbon dioxide, chlorine, and halon iv) Water-treatment equipment use v) Knowledge of operating limits, characteristics of off-normal and unique processes, and associated response and recovery conditions	2) Operator Knowledge a) Operators and physicists are knowledgeable of processes and safety that affect operation and are able to analyze off-normal situations and take action to correct the causes. Examples of process information include: i) Cooling system parameters such as pressure and temperature are monitored and alarmed as needed to warn operators of abnormal conditions. The Water Systems Group is responsible for controlling the water chemistry aspects of all water systems. ii) Hazards associated with chemical storage. See OPM 1.8, "Hazard Communication." All chemicals have associated an MSDS. These may be viewed at the BNL MSDS website. iii) Properties and hazards of gases. See, for example, OPM 8.12.2, "Securing Explosive Gas Devices From Operation" iv) Knowledge of cooling towers, evaporative coolers and water treatment systems. See Process Evaluations, EMS Process Specific Training and EMS Operational Control Forms. The Water Systems Group has the responsibility to monitor the water treatment systems. v) Knowledge of operating limits, characteristics of off-normal and unique processes, and associated response and recovery conditions. See the ASE parameter requirements in the ASEs and in OPM 2.5.6. See also OPM 10.1.d, "Operator Response to Water Spills," and Operational Control Forms.	2) Operator Knowledge None

GUIDELINE	PERFORMANCE	EXCEPTIONS
3) Operator Response to Process Problems a) Operators should be capable of making the appropriate responses to process conditions	3) Operator Response to Process Problems a) ERL Operations Personnel are trained to make appropriate responses to process conditions. See, for example, OPM 18.6.1, "Responding to Chipmunk Alarms and Interlocks" and Operational Control Forms.	3) Operator Response to Process Problems None
4) Communication Between Operators & Process Personnel a) Operators should receive reports from, and communicate with, process personnel about important process matters	4) Communication Between Operators & Process Personnel a) Operators/physicists of unique processes report to the shift leader in the ERL Control Room. See OPM 18.2.1, "ERL Operations Organization and Administration." Shift logs are used to communicate important process matters along with regular discussions between process personnel and operations staff.	4) Communication Between Operators & Process Personnel None

GUIDELINE	PERFORMANCE	EXCEPTIONS
1) File Index a) A list of the types of documents to be included in the required reading file should be maintained including: i) Changes in the process ii) Changes in equipment design iii) Information on industry and facility operating experiences iv) Information necessary to keep operations personnel informed of current facility activities b) Material should be screened to ensure that only the appropriate material is kept in file.	1) File Index a) The type of document to be included in the required reading file is indicated in OPM 1.2, "C-A Documents," and includes: i) Changes in the operation ii) Changes in equipment that impact on operations iii) Information on operating experiences iv) Information necessary to keep operations personnel informed of current facility activities b) Information is screened by the ERL Operations Coordinator to ensure that only the appropriate material is kept in file.	1) File Index None
2) Reading Assignments a) A method should be in place to designate which documents need to be read and where they can be found and filed.	2) Reading Assignments a) Operators and Operations Coordinators are required to read all documents in the Required Reading Binder, Temporary Procedures Log and Hand Processed Change Log. Operators are reminded via email, the electronic logbook (see the ERL stay elog), and verbal communication with the ERL Operations Coordinator and the ERL Operations website. See C-AD OPM 2.8, "Shift Turnover" and DOE-STD-1038-95, "Guide to Good Practices	2) Reading Assignments None
3) Required Dates for Completion of Reading a) A required completion date, based on the material, should be determined for all material. b) Documents required to be read before shift assignments should be clearly designated.	3) Required Dates for Completion of Reading a) All reading is to be completed within 10 days of issue, see C-AD OPM 2.8 "Shift Turnover." b) Documents required to be read before shift assignments are clearly designated for immediate attention through email, electronic logbooks, and verbal communication with the ERL Operations Coordinator.	3) Required Dates for Completion of Reading None
4) Documentation a) Reading should be documented and a file maintained with information.	4) Documentation a) All reading material is appropriately signed off. The ERL Operations Coordinator maintains the Required Reading Binder and sign-offs. See C-AD OPM 2.8, "Shift Turnover."	4) Documentation None

GUIDELINE	PERFORMANCE	EXCEPTIONS
5) Review a) Periodic reviews of the required reading program should be performed b) Material which has been read by all should be either discarded or filed, as appropriate	5) Review a) The ERL Operations Coordinator periodically reviews the Required Readings. b) Required Readings are purged every fiscal year and material is either discarded or filed as appropriate. See OPM 1.2, "C-A Documents."	5) Review None

GUIDELINE	PERFORMANCE	EXCEPTIONS
5	5	

GUIDELINE	PERFORMANCE	EXCEPTIONS
1) Content and Format a) Operations orders should contain special operations requirements, administrative directions, special data collection requirements, trending requirements, and other short-term matters b) Orders should be clearly written, dated, and maintained c) Operations orders program should not be used to change operating procedures d) Information intended to be permanent should be incorporated in administrative procedures	1) Content and Format a) Operations orders are provided via electronic communications including email, electronic logbooks, as well as required readings and verbal communications. These orders contain special operations requirements, administrative directions, special data collection requirements, trending requirements, and other short-term matters. b) Orders are clearly written, dated, and maintained by the ERL Operations Coordinator. c) Orders are not used to change operating procedures. d) Information intended to be permanent is incorporated. See C-AD OPM 1.4.3, "Procedure For Issuing, Revising or Changing the Status Procedures."	1) Content and Format None
2) Issuing, Segregating and Reviewing Orders a) Orders should be issued by the operations supervisor to operating personnel b) Orders should be segregated into long-term and daily orders to facilitate review c) Daily orders that are extended should be reviewed daily d) Long-term orders should be reviewed periodically e) Review of orders should be documented in log books	2) Issuing, Segregating and Reviewing Orders a) Orders are issued by the ERL Operations Coordinator to operating personnel. b) Long Term Order will be segregated to apply to the long term and will be identified as such. c) Daily orders are reviewed and deleted every 30 days. d) Long Term Orders are reviewed periodically. e) Review of orders is documented by the ERL Operations Coordinator in the ERL electronic logbook.	2) Issuing, Segregating and Reviewing Orders None
3) Removal of Orders a) Outdated orders should be removed or canceled b) Operations supervisors should review orders to assure they are current	3) Removal of Orders a) Orders are removed when appropriate by the ERL Operations Coordinator. See OPM 1.2, "C-AD Documents." b) The ERL Operations Coordinator review orders to ensure they are current.	3) Removal of Orders None

GUIDELINE	PERFORMANCE	EXCEPTIONS
1) Procedure Development a) Procedures should be developed to assist in the development and review of operations procedures and should include methods and formats for them b) Procedures should be developed giving administrative and technical direction for all anticipated operations, system changes, alarm responses, and abnormal or emergency situations also giving the appropriate responses c) The detail in the procedure should be consistent with the complexity of the task, the experience and training of the person performing the task, the frequency of performance, and the consequences of errors	1) Procedure Development a) Procedures exist to assist in the development and review of C-AD operations procedures. These procedures include methods and formats. See C-AD OPM 1.4, "Collider-Accelerator Department Plans, Policies and Operating Procedures," C-AD OPM 1.4.1, "Format of C-AD Policies, Programs and Operating Procedures," and C-AD OPM 1.4.4, "Procedure For Implementing or Canceling Temporary Procedures." b) Procedures exist at C-AD to give administrative and technical direction for all anticipated operations, system changes, alarm responses, and abnormal or emergency situations, and also to give the appropriate responses. In order to ensure this, procedure development is governed by a series of management, administrative and technical review processes. See C-AD OPM 1.4.3, "Procedure for Implementing New or Revised Permanent Procedures, or Canceling Permanent Procedures." c) The detail in procedures and training is consistent with the complexity of the task, the experience and training of the person performing the task, the frequency of performance, and the consequences of errors. See C-AD OPM 1.4.1, "Format of C-A Policies, Programs, and Operating Procedures."	1) Procedure Development None

GUIDELINE	PERFORMANCE	EXCEPTIONS
2) Procedure Content a) The following requirements should be followed to assure that the content conforms to the prescribed guidelines: i) Scope and applicability should be apparent. Emergency procedures should be easily distinguishable from other procedures by use of a color code ii) Procedures should incorporate information from appropriate reference sources iii) Prerequisites and initial conditions, including verification of the condition of the equipment to be used, should be detailed and set out in a place within the procedure which is easily found. iv) Definitions should be explained v) Procedures should be easily understood and actions clearly stated vi) Procedures should contain only one action per step vii) Procedures should contain sufficient but not excessive detail based on the skill level of those executing the procedure	2) Procedure Content a) The following requirements are followed to assure that the procedure content conforms to the prescribed guidelines: i) Scope and applicability are apparent. See C-AD OPM 1.4.1, "Format of C-A Policies, Programs and Operating Procedures." Emergency procedures are easily distinguishable from other procedures by use of a Chapter Number. See C-AD OPM Chapter 3, "C-AD Emergency Procedures." ii) Procedures incorporate information from the most appropriate reference source, which is the Standards Based Management System iii) Prerequisites and initial conditions, including verification of the condition of the equipment to be used, is detailed and set out in a place within the procedure which is easily found. See C-AD OPM 1.4.1, "Format of C-A Policies, Programs and Operating Procedures." iv) Definitions are explained; see OPM 1.3, "Definitions". In addition, each OPM has its own definitions as needed. v) Procedures are easily understood and actions clearly stated; see C-AD OPM 1.4.1, "Format of C-A Policies, Programs and Operating Procedures". vi) Procedure writers are requested to contain only one action per step; see C-AD OPM 1.4.1, "Format of C-A Policies, Programs and Operating Procedures". vii) Procedures contain sufficient but not excessive detail and are based on the skill level of those executing the procedure; see C-AD OPM 1.4.1, "Format of C-A Policies, Programs and Operating Procedures".	2) Procedure Content None

GUIDELINE	PERFORMANCE	EXCEPTIONS
viii) Warnings, notes, and cautions should be easily recognizable.	viii) Warnings, notes, and cautions are easily recognizable; see C-AD OPM 1.4.1, "Format of C-A Policies, Programs and Operating Procedures".	
ix) Warnings and cautions should precede the step to which they apply and appear on the same page	ix) Warnings and cautions precede the step to which they apply and appear on the same page see C-AD OPM 1.4.1, "Format of C-A Policies, Programs and Operating Procedures".	
x) Procedures should be technically and administratively accurate and include sufficient information and correct references	x) A review process helps ensure procedures are technically and administratively accurate and include sufficient information and correct references; see C-AD OPM 1.4.3.a, "C-A Permanent Procedure Tracking Form for New or Revised Procedures"	
xi) Sign-offs should be provided for each critical step	xi) Sign-off is provided for critical steps where appropriate; for example, search for checklists, approvals, etc.	
xii) Limits and tolerances for operating parameters should be consistent with readable accuracy of instruments	xii) Limits and tolerances for operating parameters are consistent with readable accuracy of instruments; for example, see limits in the C-A Accelerator Safety Envelopes and the associated OPM 2.5 series that are well within the readable accuracy of instruments	
xiii) Criteria for surveillance or test procedures should be easily understood. If calculations are required, they should be explained	xiii) Criteria for surveillance or test procedures are easily understood. Calculations, when required, are explained. See for example OPM 18.6.1, "Responding to Chipmunk Alarms and Interlocks."	
xiv) Sequence of procedural steps should conform to normal or expected operational sequences	xiv) Sequence of procedural steps conforms to normal or expected operational sequences; see this requirement in C-AD OPM 1.4.1, "Format of C-A Policies, Programs and Operating Procedures".	
xv) Procedures should incorporate human factors, such as exact references to components and documents, and include highlights of operational limits, warnings, and cautions	xv) Procedures incorporate human factors, such as exact references to components and documents, and include highlights of operational limits, warnings, and cautions; see this requirement in C-AD OPM 1.4.1, "Format of C-A Policies, Program and Operating Procedures".	

GUIDELINE	PERFORMANCE	EXCEPTIONS
xvii) References to procedural steps unrelated to the procedure being used should be avoided xviii) Component or system shutdown and restoration requirements following shutdown, maintenance, or surveillance should be specified	xvii) References to procedural steps unrelated to the procedure being used are avoided or identified by "GOTO" or "REFER TO" in capitals; see C-AD OPM 1.4.1, "Format of C-A Policies, Programs and Operating Procedures". xviii) Component or system shutdown and restoration requirements following shutdown, maintenance, or surveillance are specified. See for example, OPM 18.7.4, "ERL & VTF Cryogenic System Operation."	
3) Procedure Changes and Revisions a) The review and approval process for each procedure and change should be documented. **Procedure changes** imply temporary changes, to a procedure without retyping it. **Procedure revisions** constitute the retyping and reissuance of the procedure. Changes and revisions should conform to the following: i) Procedure changes should be documented in a logbook readily available for operator reference ii) Procedure changes and revisions should be made when errors or omissions are noted iii) Procedure revisions should be started when a temporary change has been outstanding for a long period of time iv) Procedure revisions should be implemented concurrently with modifications v) Information on changes or revisions should be communicated to operations personnel through shift briefings or through required reading.	3) Procedure Changes and Revisions a) Procedure changes at C-AD are performed under C-AD OPM 1.4.5, "Procedure for Implementing Hand processed Changes," and procedure revisions are performed under C-AD OPM 1.4.3, "Procedure for Implementing New, Revised Permanent Procedures or Canceling Permanent Procedures. These procedures conform to the following: i) Procedure changes are documented in a logbook readily available for operator reference. ii) Procedure changes and revisions are made when errors or omissions are noted. iii) Procedure revisions are started simultaneously when a hand-processed change is made. iv) Procedure revisions are implemented concurrently with modifications. v) Information on changes or revisions is communicated to operations personnel through shift briefings, classroom training or through required reading.	3) Procedure Changes and Revisions None

GUIDELINE	PERFORMANCE	EXCEPTIONS
vi) The reasons behind important procedure steps should be documented to assure their importance is maintained vii) Procedure reviews should involve a walk-through or a similar process	vi) The reasons behind important procedure steps are generally documented in safety or design reviews. When Caution and Warning statements are used in procedures, the consequence of not following the Caution or Warning is stated. See C-AD OPM 1.4.1, "Format of C-A Policies, Programs and Operating Procedures". vii) Procedure reviews for sweep procedures such as the C-AD OPM 4.56 Series, "Procedures for Sweeping Primary Beam Enclosures – Controlled Access," involve a walk-through.	
4) Procedure Approval a) Operating procedures should be approved by the Operations Supervisor b) Procedures which affect safety-related equipment and emergency procedures should be reviewed by the safety review committee of the department or facility c) Revisions to the procedures should receive the same level of approval as the initial versions. New and revised procedures should be approved before use d) Temporary changes should be approved by a least two individuals, one of whom must be the Operations Supervisor	4) Procedure Approval a) Operating procedures are approved by the C-AD operations management and supervisors where appropriate. See C-AD OPM 1.4, "Collider-Accelerator Department Plans, Policies and Operating Procedures," and C- AD OPM 1.1, "Authorization." b) Procedures which affect safety-related equipment and emergency procedures are reviewed by the appropriate C-AD review committee. See C-AD OPM 9.2.1, "Procedure for Reviewing Environmental, Health and Safety Aspects of Experiments," C-AD OPM 9.3.1, "Procedure for Reviewing Conventional Safety Aspects of a C-A System," and C-AD OPM 1.1, "Authorization." c) Revisions to the procedures receive the same level of approval as the initial versions. New and revised procedures are approved before use. See C-AD OPM 1.4.3, "Procedure For Implementing New or Revised Permanent Procedures or Canceling Permanent Procedures." d) Temporary procedures and Hand Processed Changes are approved by a least two individuals, one of whom must be the C-AD Head of MCR or an equivalent authority. See C-AD OPM 1.4.5, "Procedure for Implementing Hand processed Changes."	4) Procedure Approval None

GUIDELINE	PERFORMANCE	EXCEPTIONS
5) Procedure Review a) Procedures should be reviewed before they are issued and at periodic intervals to assure that information is accurate and that human factors have been considered b) Applicable procedures should be reviewed after an unusual occurrence, or other significant event c) New procedures should be walked through to ensure their workability	5) Procedure Review a) Procedures are reviewed before they are issued and at three-year intervals in order to assure that information is accurate and that human factors have been considered. The Head of MCR issues temporary procedures. Temporary procedures are authorized for a running period, which is one year or less. See C-AD OPM 1.4, "Collider-Accelerator Department Plans, Policies and Operating Procedures." b) Applicable procedures are reviewed after an unusual occurrence, or other significant event. See C-AD OPM 10.1, "Occurrence Reporting and Processing of Significant Operations Information." c) New procedures are walked through to ensure their workability. See C-AD OPM 1.4, "Collider-Accelerator Department Plans, Policies and Operating Procedures."	5) Procedure Review None
6) Procedure Availability a) Controlled copies of procedures should be maintained in control areas for operator reference, and in other areas as appropriate b) Working copies should be controlled and a system put in place to ensure outdated procedures are replaced	6) Procedure Availability a) Controlled copies of the C-AD procedures are maintained for operator reference and in other areas as appropriate. See C-AD OPM 1.2, "C-A Documents." Current procedures are maintained on an intranet for ease of access; the QA and Documentation Manager maintains the original copy of all procedures. See C-AD OPM 1.4, "Collider-Accelerator Department Plans, Policies and Operating Procedures." b) Official copies of procedures are maintained at an official, fire-walled website. Before using a printed copy, workers must verify that the procedure is the most current version by checking the document issue date on this website.	6) Procedure Availability None
7) Procedure Use a) The requirements for using the procedures should be understood by all operators b) Operators need not look up the emergency procedures when taking immediate actions in emergency situations, but the procedures should be reviewed immediately after to validate the action	7) Procedure Use a) The requirements for using the procedures are understood by all operators. This is accomplished through appropriate training programs, testing and procedure walkdowns. See C-AD OPM 1.12, "Training and Qualification Plan." b) Operators generally do need not look up the emergency procedures when taking immediate actions in emergency situations; however, they are reviewed immediately after to validate the actions taken. See C-AD OPM 3.1, "Emergency Procedures to be Implemented by the Department Emergency Coordinator," section 5, for example.	7) Procedure Use None

GUIDELINE	PERFORMANCE	EXCEPTIONS
1) Operator Aid Development a) Anyone can develop an aid, but facility personnel must be informed of the importance of controlling such information	1) Operator Aid Development a) Operations aids are maintained on the ERL Operations Website. Rules for controlling such information are in OPM 1.2, "C-A Documents," section 5.	1) Operator Aid Development None
2) Approval a) The Operations Supervisor must approve all operator aids. Aids which alter procedures should be incorporated into procedures.	2) Approval a) The ERL Operations Coordinator approves all operator aids. See OPM 1.2, "C-A Documents." Aids are not used to alter procedures.	2) Approval None
3) Posting a) Posted materials should be located near their area of use and not obscure any instruments or controls. Aids should be protected and properly secured	3) Posting a) Aids may be viewed via computer "windows" at each of the five control consoles in the MCR. They do not obscure any instruments or controls. Aids are protected and properly secured by the ERL Operations Coordinator.	3) Posting None
4) Use of Aids a) Aids should supplement approved procedures and not be used in lieu of them	4) Use of Aids a) Operator aids do not contain material that is procedural in nature. They contain maps, equipment lists and non-emergency call-down lists, for example.	4) Use of Aids None
5) Documentation a) A listing of all approved operator aids should be maintained and audited	5) Documentation a) An operator-aid index is on the ERL Operations Website. Aids are maintained and audited by the Head of the Main Control Room.	5) Documentation None
6) Review a) The approved aid list should be reviewed periodically to assure outdated aids are removed and missing aids are replaced. As procedures are updated, related aids should be updated.	6) Review a) Operator aids are reviewed periodically by the Head of the Main Control Room. See OPM 1.2, "C-A Documents" for review requirements.	6) Review None

GUIDLINE	PERFORMANCE	EXCEPTIONS
1) Components Requiring Labeling a) Valves b) Major Equipment c) Switches d) Circuit Breakers e) Fuse Blocks f) Instruments and Gages g) Electrical Busses and Switchgear h) Cabinets (Relay, Terminal) i) Room Doors j) Emergency Equipment (Fire Alarm Stations, Intercom Equipment) k) Fire Protection Equipment	1) Components Requiring Labeling a) Rules for labeling items a) through k) in column 1 are found in SBMS. See for example Identification of and Piping Systems and Design Criteria for Research and Development Electrical Equipment. The labeling requirements in OSHA 29CFR1910 are also followed.	1) Components Requiring Labeling None
2) Label Information a) Information on labels should be consistent with information found in procedures, and system diagrams b) Labels should be permanent, securely attached, and easy to read c) If color coding is used, it should be consistent d) Piping should indicate the fluid contained and the normal direction of flow. OSHA color coding should be used, and piping containing hazardous fluids or gasses should be uniquely identified e) Labels should be suitable for their environment	2) Label Information a) Information on labels is consistent with information found in procedures and system diagrams b) Labels are permanent or securely attached, and easy to read c) Color coding, when used, is consistent d) Piping indicates the fluid contained and the normal direction of flow. OSHA color coding is used, and piping containing hazardous fluids or gasses is uniquely identified. e) Labels are suitable for their environment	2) Label Information None
3) Label Placement a) Labels should be placed on or as near as possible to equipment to be labeled b) Labels should be oriented for easy reading	3) Label Placement a) Labels are placed on or as near as possible to equipment to be labeled b) Labels are oriented for easy reading	3) Label Placement None

GUIDLINE	PERFORMANCE	EXCEPTIONS
4) Replacing Labels a) Identifying Lost or Damaged Labels i) Procedures should be established to replace labels that are lost or damaged ii) Post maintenance tests should include a review of labels iii) Where informal labeling is used, it should be replaced with proper labels b) Providing New Labels i) There should be methods and facilities to create required labels ii) Replacement of labels or attachment of temporary labels should be verified	4) Replacing Labels a) Identifying Lost or Damaged Labels i) Procedures are established to replace labels that are lost or damaged ii) Post maintenance tests include a review of labels iii) Where informal labels are found, they are replaced with proper labels b) Providing New Labels i) There are methods and facilities to create required labels ii) Replacement of labels or attachment of temporary labels is verified	4) Replacing Labels None

Lines Of Inquiry For Authorization Basis Documents, Activities And Records 1
Lines Of Inquiry Directed Primarily Towards The Controls System 2
Lines Of Inquiry For Corrective Action Plans And Status From Past Reviews Or Events 3
Lines Of Inquiry For Conduct Of Operations 3
Lines Of Inquiry For QA Program 4
QA Lines Of Inquiry For Documents And Records 4
QA Lines Of Inquiry For Work Processes And Inspection & Acceptance Testing 4
QA Lines Of Inquiry For As Builts 5
QA Lines Of Inquiry For Procurement 5
QA Lines Of Inquiry For Management Assessment, Independent Assessment 5
Lines Of Inquiry For Alarming And Interlocking Radiation Monitors (AIRMS) 5
Lines Of Inquiry For Radiation Protection Program 6
Lines Of Inquiry For Conventional Safety/ESH 6
Lines Of Inquiry For Lockout Tagout Program 6
Lines of Inquiry for Interlock Systems (From SBMS) 8
Access Control System 8
Laser Interlocks 15
ODH Interlocks 18

Lines Of Inquiry For Authorization Basis Documents, Activities And Records

- Ensure records of shielding design are up to date and configuration managed
- Ensure safety analysis for was completed for assumed beam loss rate and that assumptions in the safety analysis are configuration managed
- Validate that the shielding statements in the Commissioning ASE are accurate
- Ensure USI fault conditions and assumptions are reflected in the SAD and procedures
- Validate that Commissioning ASE is up to date and updates are reflected in procedures and USI records
- Check to ensure specifications used in shielding safety analyses are valid
- Review USI Process
- Check to ensure the Radiation Safety Committee (RSC) recommendations were addressed
- Review performance against commitments to local shielding design and configuration management of shielding
- Verify closeout of all safety committee recommendations for SADs, USIs and ASEs
- Verify ASE Credited Controls for Radiation Hazards and Credited Control Supports are understood by operators and configuration managed

- Verify ASE Credited Controls for Maximum Credible Incident are configuration managed, understood by operators and measurable
- Verify operators are familiar with the safety basis for Credited Controls in the ASE
- Verify designers, engineers, RSC members and approval authorities for shielding modifications are familiar with the Shielding Policy, Shielding Design Objectives and Safety Review Process for Shielding in the SAD and in procedures
- Verify SAD and ASE Approvals
- Check the status of the Commissioning Plan, Commissioning Sequence and Commissioning Fault Study Plans
- Verify description of shielding in the SAD
- Verify description of beam diagnostics in the SAD
- Verify description of power system grounding in the SAD
- Verify description of fire protection in the SAD
- Verify description of ODH system in SAD
- Verify description of radiation controls in the SAD
- Verify description of radiation monitoring in the SAD
- Observe work planning and control for a specific job
- Check if RF controls are in place
- Check bulk shielding thicknesses
- Locate documents and observe hardware that support statements regarding the Access Control System
- Validate administrative practices identified in procedures
- Verify there are enough qualified operators and radiological safety personnel to meet planned commissioning schedule
- Verify an annual review process is implemented
- Verify Credited Administrative Controls are in place
- Verify Credited Engineering Controls are in place
- Verify SBMS process for safety related software QA is implemented

<u>Lines Of Inquiry Directed Primarily Towards The Controls System</u>

- Examine the documentation and configuration control for controls hardware/firmware components, including interlocking PLCs
- Examine the wiring/cabling documentation control for the controls hardware
- Review test procedures for interlocking PLCs
- Review plan to implement and test those controls used to maintain limits of equipment operations as defined in the ASE
- Validate process for managing configuration of computer software controls
- Ensure necessary cyber security requirements are met pertaining to control system networks
- Confirm testing for control room alarms, monitors, and controls
- Validate commissioning procedures for operating, inspecting, testing, and maintaining the control system are in place
- Ensure necessary training is in place for personnel that operate, test, and maintain the control system

- Review alarm set point configuration control
- Check that alarm response is clearly defined
- Review list of open items
- Review tools for controlling the release of controls system drivers and applications
- Examine controls reaction to a power outage
- Review how the limits of equipment operations as defined in the ASE are handled by the controls system
- Examine wiring/cabling documentation and configuration control for controls hardware
- Examine and concur on process to change/modify instrumentation hardware and software related to controls during commissioning

Lines Of Inquiry For Corrective Action Plans And Status From Past Reviews Or Events

- Review process for determining effectiveness of corrective actions
- Review of critiques, injuries, Occurrences and USIs at C-AD for corrective actions applicable to ERL
- Status of corrective action items
- Review of evidence for closure

Lines Of Inquiry For Conduct Of Operations

- Commissioning Plan completed
- Operations and Technical Procedures for Commissioning (completed & trained)
- Formal processes for review, validation, etc. of ERL procedures
- Local Emergency Coordinator effectiveness for Incident Command from ERL Control Room
- Is the Conduct of Operations Matrix prepared and approved
- Are implementing procedures cited in the Matrix prepared and issued
- Has training been completed by operators on procedures
- Has operations and support staff been trained in “Conduct of Operations”
- Has a Training Needs Analysis been completed?
- Has the Control Room staffing plan been established?
- Who will perform commissioning, operators, physicists, a combination of the two?
- Are there R2A2s and JTAs for commissioners (operators and/or physicists)
- Are the proposed performance criteria in the C of O Matrix in place to satisfy the required guidelines for:
    - 1 Operations Organization and Administration
    - 2 Shift Routines and Operating Practices
    - 3 Control Area Activities
    - 4 Communications
    - 5 Control of On-Shift Training
    - 7 Notifications
    - 8 Control of Equipment and System Status
    - 11 Log keeping
    - 12 Operations Turnover

- 14 Required Reading
- 15 Timely Orders to Operators
- 16 Operations Procedures
- 17 Operator AID postings

- Has an operations/commissioning organization been established consistent with the C-AD organization?
- Has an ERL operations qualification and training program been established?

Lines Of Inquiry For QA Program

- QA Plan and implementing procedures
- Organization chart
- R2A2 for those with QA responsibilities (QA Staff as well as others)
- T&Q records
- Processes to detect and prevent quality problems, including corrective action
- Programs to periodically review item characteristics, process implementation, and other quality-related information to identify items, services, and processes needing improvement
- Procedures to achieve Quality Improvement
- Walk down Corrective Action tracking processes/systems, interview cognizant staff

QA Lines Of Inquiry For Documents And Records

- Process for procedure development
- Process for assuring procedure usability
- Process for assuring procedure adherence

- Procedures for the development, review, approval, revision and control of procedures.
- Objective evidence: review “sample” of procedures, walk down process.

QA Lines Of Inquiry For Work Processes And Inspection & Acceptance Testing

- Incoming inspection and test processes
- Process for handling Nonconformances
- Assembly processes
- Installation processes
- Procedures for inspection and test of items, calibration, nonconformance documentation and disposition, assembly & installation
- Objective evidence of procedure implementation. Review records, walk down process, interview
- Drawings; tech specs, other engineering documents
- Document review and approval processes
- Change control processes for documents

QA Lines Of Inquiry For As Builts

- Procedures for drawings, tech specs, and other engineering document review, approval, control, and change control.
- Objective evidence of implementation of procedures. Review drawings, tech specs, other documents, walk down process.

QA Lines Of Inquiry For Procurement

- Supplier qualification process
- Processes for handling supplier non conformance
- Procedures for supplier qualification. Objective evidence: perhaps pull some procurement packages.

QA Lines Of Inquiry For Management Assessment, Independent Assessment

- Self-assessment and management assessment processes, responsibilities, communication of and response to assessment results
- Action Tracking processes
- Process and system for tracking actions from advisory committees, project reviews, assessments, audits
- Communication to management on status of actions
- Process for closing out actions; validation and verification
- Authority to close
- Schedule of independent assessments
- Objective Evidence: review performance to the assessment program, assessment plans and reports, corrective action plans, follow up and tracking of actions, communication to management on status of CA and CAPs

Lines Of Inquiry For Alarming And Interlocking Radiation Monitors (AIRMS)

- Design basis: what is the source term that needs to be monitored and at what levels?
- Does the selected AIRM meet these specifications?
    - How did C-AD convince themselves of this?
    - What evidence is there to support this?
- How many AIRMs does ERL require for commissioning, and are they all available, calibrated, and in place?
    - What is the process for determining AIRM placement?
    - What is the basis for the default settings?
    - Does C-AD have a formalized process for changing AIRM placement/location?
    - Verify how configuration control is implemented
- Who within C-AD owns the AIRM Program?
    - Have the responsibilities for maintenance and calibration been clearly defined?

- What is the process for determining Alarm and Interlock set points?
    - Verify C-AD has a formalized process for controlling/changing these set points
- Is there a procedure for functionally testing AIRMs as a part of the facility startup process and is the procedure consistent with the requirements in the SAD?
- Is there an AIRM alarm/interlock response procedure?
    - Verify Operators have been trained to the requirements of this procedure
- How are alarms displayed in the Control Room?
- Can the AIRM dose rate readings be displayed in the Control Room?
    - How has C-AD validated these displays are accurate? (conversion and correct display was an identified problem in the beam miss-steering report)
    - Has a software needs document been provided to the Controls Group so they know what the end product needed is?
- Does C-AD have a documented process for changing out AIRMs that fail?
- Observe a field calibration performed by RCD's Instrumentation and Calibration Group

Lines Of Inquiry For Radiation Protection Program

- Portable instrument performance data has been collected to determine how the instrument responds in short pulse width radiation fields
- Appropriate number of trained and qualified RCTs to support commissioning work
- Review current inventory of portable radiological instrumentation and determine adequacy for the commissioning process
- A radiological control procedure or work instruction for obtaining beam fault study radiation survey measurements has been prepared

Lines Of Inquiry For Conventional Safety/ESH

- Review procedures and practices for:
    - Environmental, Safety and Health Inspections
    - Electrical Safety
    - Fall Protection and Elevated Work
    - Material Handling
    - Consumption of Food in the Experimental Areas
    - Compressed Gas Storage Policy
    - Cryogenic Liquids: Storage, Usage and Handling
    - Laser Safety/SOP
- Review Manager Work Observation program for effectiveness and general observations
- Review conformance to Chemical Management System

Lines Of Inquiry For Lockout Tagout Program

- Objective evidence of a comprehensive organizational level list of Primary Authorized and Authorized Employees, as required.
- Objective evidence of JTA development to address training called out in procedures.
- Training to the new LOTO procedure (for all personnel expected to hang a lock during LOTO process) required to be completed prior to September 30, 2013 is incomplete.
- Observe field LOTOs, both simple and complex LOTO
- Equipment labeling LOTO procedures validated for accuracy and applicability by a knowledgeable person
- A comprehensive list of Primary Authorized and Authorized employees has been identified and is maintained
- Policy for agreement of nomenclature called out in procedures for labeling on equipment

Lines of Inquiry for Interlock Systems (From SBMS)

Access Control System

- Specific design requirements:
  - Interlock systems for ionizing radiation safety must be "fail safe;" that is, in their most likely failure modes, they will prevent the production and/or transport of radiation in the corresponding areas
  - All active barriers and critical devices must be equipped with status sensors
  - No failure of a single component, including the critical device, can render the composite system unsafe. That is, redundancy must be used
    - Sequential check stations, emergency crash devices, audible, and visual warning devices and general monitoring signals may be singular, as the additional protection layer is the sweep
    - Reach back devices may be singular
  - Where a potential common mode failure is identified, then the following actions must be taken:
    - The common mode failure must be reduced by changing the design or physically separating the independent sub-systems of the interlock system. Diversity of design and physical separation are two effective methods of reducing the likelihood of common mode failures
  - Devices that are used to directly prevent the production and/or transport of radiation in a particular area, generally called a “critical device,” must be controlled by a fail-safe interface to the interlock system, e.g., loss of input from the interlock system must cause the shutdown or cease the transport of the radiation.
    - The interface must provide a status indication that provides a positive assertion that the critical device is in the safe state, e.g., a switch closure indicating the safe state
    - A documented engineering review of the critical device must be performed to evaluate the compliance to these requirements
    - If primary responsibility for a critical device is not with a designated interlock system group or interlock system owner; then this situation must be resolved by implementing a formal configuration-control system to ensure that the safety function of the device is not compromised by the activities of other groups or experimenters
  - Emergency "crash" devices, which disable the radiation source, must be provided and must be clearly visible, even in emergency lighting, and readily recognized and accessible; the device must require local manual reset
  - The status of each critical device must be monitored to ensure that the devices are in the “safe” condition when personnel access is permitted. If the “safe” condition is lost, then the beam must be inhibited by operation of other critical devices upstream (reach back) where applicable. Critical device control systems must be independent of the monitoring systems
  - Where personnel entry is possible, the interlock system must require that the accelerator enclosures be searched before the beam is enabled to ensure that there

aren't any people still inside. If any sensor indicates that personnel might be in the controlled area, e.g., an entry door is open or a crash has been activated, the sweep must be invalid and the area must be re-swept

- It must not be possible to resume the normal operation of the radiation source simply by enabling the interlock system after it has been disabled by an opened gate, emergency crash device, crash signal from out of range trip, or crash signal from a radiation detector. That is, the interlock system will latch and the event will be evaluated by authorized personnel prior to resuming operations
- If the design allows parts of the interlock system to be bypassed under certain controlled conditions, the design must provide an equivalent level of protection. The bypass control must be accessible to authorized personnel only. An acceptable alternative is the use of administrative procedures that are carefully followed and documented
- All interlock system lines and components must be labeled or readily identifiable
- The design of the interlock system must provide for complete testing, with the effort and disruption required by such tests within practical limits. That is, the design of the system must be such that scheduled testing is practicable
- Physical access controls must allow personnel to freely exit the area, consistent with requirements of the New York State Building Code (NYSBC)
- Status signs or clearly labeled status lights must be provided at accelerator-enclosure entry doors
- If all spaces that can be occupied inside the accelerator enclosure cannot be viewed clearly from the entryway, then sequential-search confirmation buttons, or check stations, must be placed such that the enclosure is comprehensively searched. The system must require that the sequential sweep be restarted if the entry door is opened prior to completion of the sweep
- The sweep must be timed unless timing the sweep is deemed not to be reasonable
- There must be audible and/or visible warnings providing a time interval before enabling of the accelerator beam.
    - If the lights are dimmed as the visible warning, then the level of illumination must remain strong enough for personnel to see clearly in order to rapidly leave the facility or take action to prevent actuation of the beam. The duration of the warning interval must be sufficient for an individual to reach an emergency "crash" device or to leave the area, but in no case less than 30 seconds
- The accounting for each person entering the accelerator enclosure under Controlled Access mode must be by accountable-key-exchange (key-tree)
- Entryways to accelerator enclosures must be locked during beam operations. Keys to these locks must be configuration controlled; that is, records of persons that hold keys must be maintained
- Diversity in interlock system component selection must be employed where practicable; i.e., different types of components and different manufacturers must be used where practicable
- Computer-based/PLC-based interlock systems must also meet these design requirements:

        - Redundancy must be provided by independent computer systems or programmable electronics with logic software written by different programmers working independently. That is, one programmer must not program both systems or program specific parts of both systems
        - Computers/PLCs for these systems must be dedicated solely for this use, and all external links (e.g., test boxes, development computers, external networks, etc.) must be eliminated or strictly controlled
    - Where parts of an active protection system, either a programmable or a non-programmable system, need to be modified or tested, those parts being modified or tested must be isolated such that they present no hazard to any active system or protected area
    - When a documented assessment has shown that there is appropriate evidence, based on the previous use of a component, that the component is suitable for use in an interlock system, then that component is “proven-in-use” for the purpose of protecting personnel
- Specific operational requirements:
    - A configuration management practice must be used to document the interlock system logic, system codes, state tables, system components, and wiring, and the documentation must be kept up-to-date. Drawings and system codes must be at least QA2
    - Interlock systems must not be routinely used to turn off radiation-producing equipment. The equipment control system must provide this function
    - Loss of power, signal, or communication to all or a self-contained subsection of the accelerator interlock system components must trigger a requirement to re-secure the affected area, which would involve searching any area that may have been opened during the loss of power, signal, or communication
        - The search is not required for enclosures that have undisturbed positive tamper-proof seals on entryways (e.g., manual locks, tamper-proof tape, or wire)
    - Operations procedures must be developed to address sweeping accelerator enclosures clear of personnel; that is, operators of accelerators must search and clear the enclosure of personnel before they enable beam to ensure that there aren't any people still inside the enclosure.
    - If any door is improperly opened after being swept or any emergency function of the interlock system is activated inside the accelerator enclosure, then the system logic must abort the search and the sweep re-started from the beginning
    - The search procedures must be rigorous and be carefully designed, and must be reviewed when the area configuration changes and every three years thereafter
    - A Controlled Access mode may be provided, wherein a few workers are permitted to enter an already searched area to carry out specific tasks. When all personnel leave the accelerator enclosure, the radiation source may be returned to the enabled condition without a search. The safety of such entries depends on strict controls and well-defined procedures that make certain the same number of people who entered the enclosure also leave the enclosure
        - A permanent, written or electronic record of each Controlled Access must be made, which must include the name of each person entering, and the

time of entry and exit. This record must be maintained for 5 years as a part of the operations records for the accelerator facilit

- Each passage, into or out of an entry door, must be controlled by an operator or via a biometric system providing equivalent protection. The interlock system must require an operator action to open the door or a biometric-system action to open the door without aborting the searched condition of the accelerator enclosure.
    - This control may be exercised remotely by an operator, from a control room for example, if suitable surveillance is maintained by television or other means
    - If a biometric system is used in lieu of an operator or a remote operator, then the system must provide reliability equivalent to or greater than an operator and be approved by the Department Chair or Division Head or his/her designee
- Administrative limits must be placed both on the number of people allowed into the accelerator enclosure when placed in the Controlled Access mode and on the maximum elapsed time that the enclosure is occupied in the Controlled Access mode
- After a Controlled Access is complete, the entry record must be reconciled to ensure those who entered have left, and a warning interval must be required before the radiation source is returned to the enabled condition

- An appropriate entry control program (that is, entry procedures for specific beam lines or accelerator areas; entry procedures for entry into enclosures after abnormal conditions; escorting policies for accelerator enclosures; access procedures into high radiation areas or areas with multiple hazards) must be established
- Administrative procedures must define the required actions of personnel whenever interlock systems disable the radiation source, and they must be reviewed by line management at least every five years
- For accelerator enclosures capable of having residual radiation after the radiation source is disabled, entry procedures must include radiation surveys as part of the initial entry, and periodically, as necessary
- As a minimum, interlock system bypass procedures, if used, must address the following requirements:
    - If a bypass is used, the Department Chair or the Accelerator Project manager must ensure a documented practice or procedure is in place to ensure only appropriate bypasses remain in place prior to operations with beam
    - A cognizant interlock system engineer and a designated specialist familiar with the hazard requiring an interlock system must review and document approved bypasses
    - The reviewers must verify and maintain a bypass documentation file with the following information:
        - Description of bypass with expected expiration date
        - Explanation of continued safety functionality or equivalent protection after bypass is incorporated

            - Description of bypass validation test. This is a test to see if the system functions as expected with the bypass in place
            - List of equipment used for bypass including type and serial numbers when applicable
            - Copies of marked up drawings, state tables, logic diagrams, or other relevant documentation must be attached to the bypass documentation file
            - Test after the bypass is removed to verify safety function of the interlock system
    - Software development computers or test boxes must not be permitted to link to computer-based/PLC-based interlock systems during beam operations
        - Software development computers or tests boxes are permitted to link to computer-based/PLC-based interlock systems if there are no beam operations in the area under test or development and if appropriate safeguards are in place to protect contiguous areas. Before the beam is returned to operations, verify that the program was not changed and either: 1) no personnel have entered affected enclosures, 2) Controlled Access was in use in affected enclosures, or 3) the affected accelerator enclosures require a sweep before the beam is returned to operations
        - Interlock systems must be reset to a safe state to ensure no unsafe conditions were created by use of a software development computer or test box
- Specification requirements:
    - Design requirements must be defined early in a project to ensure that the interlock system functions provide the desired protection.
    - Define the overall interlock system function. An example is “protect personnel from exposure to greater than 50 rem in an hour by shutting off the radiation source when a radiation monitor detects a predetermined threshold of radiation.”
    - Include the following elements in the specification:
        - The measurements that need to be taken to detect the onset of the hazardous condition
        - The value of the parameter at which action must be taken
        - The actions that need to be taken that will prevent the hazardous condition
        - Response time requirements for the interlock system from the time of onset of hazardous condition to removal of the radiation source
- Testing and maintenance requirements:
    - To assure that an installed interlock system is functional and not compromised, periodic testing as required by the Radiological Control Manual is mandatory. There is no other way to verify that wiring errors, component failures, or other faults do not compromise the system. A successful testing program depends on a system design that accommodates testing, a well-designed series of tests, and the commitment of time and resources to accomplish the tests
    - A comprehensive functional test must be performed before an interlock system is placed in service to demonstrate that installation is in accordance with design requirements and that operation gives the desired result

        - The test must require that each logic input is exercised and the appropriate logic action and protective response(s) is verified
        - Redundant chains must be independently exercised
        - Other required functions, such as time delays, installed bypasses, manual actuation(s), status indicators, and warnings, must also be tested
        - Because similar devices are replicated in a system and one can be mistaken for the other, the test must show the capability of proper logic system response from actual sensor through to the actual protective response(s)
        - If response times of portions of the system or the entire system are important, then these must also be verified
    - A functional test must be performed after modification, reconfiguration or maintenance is completed on an interlock system or any system that might affect the interlock system. This includes bypass of the system or any portion of the system
        - The testing must cover all parts of the system that could be affected by an error or fault in the portion of the system that has been worked on or bypassed
        - Maintenance and service actions that are deemed not to require testing must be declared and justified in auditable maintenance documentation
        - Any portions of the system designed to be tested when the interlock system is to be functional must not prevent the interlock system from performing its safety function
    - Any portions of the system designed to be tested when the interlock system is to be functional must not prevent the interlock system from performing its safety function
    - An interlock system should not be used for protection unless a complete functional test has been done within the specified testing interval
        - Testing intervals must be in accordance with the Radiological Control Manual, Appendix 3A
        - With proper justification, exemptions from these testing requirements may be requested from the Manager, Radiological Control Division
        - Based on experience and records that demonstrate system reliability over a period of at least 5 years, a permanent extension of the interlock system testing interval may be requested from the Manager, Radiological Control Division
    - Tests must be executed with a prepared, approved checklist, which includes a sign-off by personnel performing the interlock system test and a check-off for each observed input and response
        - The checklist must be written such that it ensures a complete and proper test and provides an auditable record
        - The testing may be performed by a series of sequential, overlapping, or total system tests so that the entire logic system is tested from actual sensor through to the actuated critical devices
    - The completed test records must be reviewed by at least two reviewers designated by the Department Chair or Accelerator Project Manager. For normal test results,

this may be two QA personnel. For abnormal test results, the review must include the cognizant interlock system engineer and a designated specialist
    - The system's test program must be independently reviewed. This review should be conducted in concert with the review of the system's design
    - Facility-specific maintenance procedures must be developed to address visual inspections, checks of interlock system power supply operating voltages, lubrication of locks and switches, and manufacturer's recommendations on maintaining interlock system components
- Records requirements:
    - The development of appropriate records is necessary to document compliance with the requirements of this SBMS subject area
    - Facility Design Documentation:
        - A written configuration management plan for the interlock system (that is, a description of the method by which the configuration or modification of the hardware, software, and documentation will be managed) must be established for the accelerator
        - Safety basis documentation (Safety Assessment Document) must provide information concerning the design basis for the operation of the facility, hazard and risk assessment and mitigation strategies
    - Interlock design documentation must be prepared and entered into a configuration control system and include:
        - Functional description of the interlock system
        - Technical basis design document that includes:
            - Hazard and risk assessment with mitigation strategies
            - System design specifications and assumptions used to determine the probability of failure of the system and frequency of unsafe failure
        - If software is utilized as a part of the personnel safety function, its design and documentation must be in accordance with the SBMS subject area concerning quality assurance
        - Complete "as built" electrical configuration drawings
        - Management review and approval of the system design and approval for installation and implementation
        - External reviews of the interlock system design
    - Installation and Testing Documentation:
        - Records of verification and validation of the proper installation and initial functional testing
        - Commissioning test plans and procedures approved by Department Chair or Division Head or his/her designate prior to use
        - An auditable record of the initial interlock tests (acceptance tests), results and resulting configuration changes
    - Operational Documentation:
        - Records of interlock modifications with an explanation of the reasons for the modification and a test plan to ensure against unintentional degradation of the margin of safety
        - Interlock system operations/maintenance procedures

        - Documentation of periodic interlock test results and resolution of unexpected test results
        - Results of periodic audits and assessments of the interlock program

Laser Interlocks

- Specific design requirements:
    - Interlock systems must be "fail-safe;" that is, in their most likely failure modes, they will prevent the production of radiation in the corresponding areas
    - All active barriers must be equipped with a sensor that ensures the barrier will perform its protective function
        - Devices that are used to directly prevent the production of laser radiation in a particular area must be controlled by a fail-safe interlock system
        - Unless exempted by the Laser Safety Officer (LSO), the interface must provide a status indication that provides a positive assertion that the device is in the safe state, e.g., a switch closure indicating the safe state. A documented engineering review of the device must be performed to evaluate compliance to these requirements. The laser owner must implement a formal configuration-control system to ensure that the safety function of the device is not compromised by the activities of other workers
        - For emergency conditions, there must be a clearly marked “Emergency Stop,” or other appropriately marked device that is appropriate for the intended purpose (remote controlled connector or equivalent device), available for deactivating the laser or reducing the output levels below the applicable hazardous level. The device must require local manual reset
        - If all spaces that can be occupied inside the LCA cannot be viewed clearly from the entryway, a sequential search must be performed (administrative control) and that, at the discretion of the LSO, a system of sequential search confirmation buttons (engineering controls) may be required for complex LCA configurations. The system must require that the sequential sweep be restarted if any entry door is opened prior to completion of the sweep. Alternatively the sweep must be timed. This requirement may be met if a line of sight search can be established for the enclosure. If any sensor indicates that personnel might be in the LCA, e.g., an entry door is open or a crash has been activated, the sweep must be invalid
        - It must not be possible to resume the normal operation of the laser simply by enabling the interlock system after it has been disabled. That is, the interlock system will latch and the event will be evaluated by authorized personnel prior to resuming operations
        - If the design allows parts of the interlock system to be bypassed under certain conditions, an equivalent level of protection must be used. An acceptable equivalent level of protection is the use of administrative procedures that are carefully followed and documented
        - The National Electric Code must be followed for all electrical components used in the interlock system

        - The design of the interlock system must provide for complete testing, with the effort and disruption required by such tests within practical limits. That is, the design of the system must be such that routine testing is practicable.
        - Physical access controls must not prevent personnel from leaving the area, consistent with requirements of the New York State Building Code (NYSBC)
        - Entryway warning light assembly or audible signal must be provided at LCA entry doors
        - An activation warning system should be used with class 3B, and must be used with class 4 laser systems during activation for startup
        - Diversity in interlock system component selection must be employed where practicable when interlock systems are not commercial-off-the-shelf items; i.e., different types of components and different manufacturers must be used where practicable
        - Computer-based interlock systems must also meet these design requirements:
            - Computers for these systems must be dedicated solely for this use, and all external links must be eliminated or strictly controlled.
            - Where parts of the interlock system need to be decommissioned for servicing or modification, breaking software links must not be considered sufficient for isolation. It must be demonstrated that signals from the decommissioned part cannot influence the active part of the interlock system
- Specific operational requirements:
    - A configuration management practice must be used to document the interlock system logic, system components, and wiring, and the documentation must be kept up-to-date. Drawings must be signed by the laser owner
    - Interlock systems must not be routinely used to turn off the laser. The equipment control system must provide this function
    - Loss of power or communication to all or a self-contained subsection of the LCA must trigger a requirement to re-secure the affected area, which would involve searching any area that may have been opened during the loss of power or communication
        - The search must not be required for enclosures that have undisturbed positive tamper-proof seals on entryways
    - The search procedures, where applicable, must be rigorous and be carefully designed, and must be reviewed when the area configuration changes and annually by the laser owner and LSO
    - Interlock system bypass procedures, if used, must contain the following requirement:
        - A cognizant interlock system engineer and the LSO must review and document approved bypasses
    - Backup copies of in-use computer-based interlock system software must be strictly controlled
    - Software development computers must not be permitted to link to computer-based interlock systems during laser operations

- Specification requirements:
  - Design requirements must be defined early in a project to ensure that the interlock system functions provide the desired protection.
  - Define the overall interlock system function. An example is: "A breach of the LCA will result in the cessation of laser emission into the LCA by either shutting down the laser diodes of the pump laser or closing a solenoid-actuated beam stop at the final exit of the laser system."
  - Include the following elements in the specification:
    - A written functional description of the interlock system, including:
      - Hazards protected against
      - Means of protection
      - Entry and search protocols if applicable, including announcements, alarms and emergency responses
      - Response of the system in normal operation, and to fault conditions and foreseeable error, as well as to equipment failure
    - Documentation of the physical and electrical configuration of the system including circuit diagrams, wiring diagrams, and component specifications
    - Written test procedures that specify test frequency (at least every six months) and completeness, including prepared checklists to ensure that complete functional and auditable records of tests of the system
    - A description of configuration management for controlling design, modifications, and replacements, and maintaining complete and accurate documentation
    - A record of management approval of the system
- Testing and maintenance requirements:
  - To assure that an installed interlock system is functional and not compromised, periodic testing is mandatory. There is no other way to verify that wiring errors, component failures, or other faults do not compromise the system. A successful testing program depends on a system design that accommodates testing, a well designed series of tests, and the commitment of time and resources to accomplish the tests
  - A comprehensive functional test must be performed before an interlock system is placed in service to demonstrate that installation is in accordance with design requirements and that operation gives the desired result
    - The test must require that each logic input is exercised and protective response(s) is verified
    - Required functions, such as time delays, installed bypasses, manual actuation(s), status indicators, and warnings, must also be tested
    - All provided status and warning indicators must be verified
    - The test must show the capability of proper logic system response from actual sensor through to the actual protective response(s)
    - If response times of portions of the system or the entire system are important, then these must also be verified
  - A functional test must be performed after modifications or maintenance is completed on an interlock system or any system that might affect the interlock system. This includes bypass of the system or any portion of the system

        - The testing must cover all parts of the system that could be affected by an error or fault in the portion of the system that has been worked on or bypassed
    - Any portions of the system designed to be tested when the interlock system is to be functional must not prevent the interlock system from performing its safety function
    - When the system is reconfigured, it must be tested before operating the facility to ensure that only the desired function is altered and that all other parts of the system still function properly

    - An interlock system should not be used for protection unless a complete functional test has been done within the specified testing interval
        - With proper justification, exemptions from these testing requirements may be requested from the LSO
    - Tests must be executed with a prepared, approved checklist, which includes a sign-off by personnel performing the interlock system test and a check-off for each observed input and response
        - The checklist must be written such that it ensures a complete and proper test and provides an auditable record
        - The testing may be performed by a series of sequential, overlapping, or total system tests so that the entire logic system is tested from actual sensor through to the actuated critical devices
    - The completed test records must be available for review
    - The system's test program must be independently reviewed. This review should be conducted in concert with the review of the system's design
- Records requirements:
    - The development of appropriate records is necessary to document compliance with the requirements of this SBMS subject area
    - Interlock design documentation must be entered into a configuration control system and include:
        - The interlock system description
        - Complete "as built" electrical configuration drawings
        - External reviews of the interlock system design
        - Records of verification and validation of the proper installation and initial functional testing
        - An auditable record of the initial interlock tests (acceptance tests), results and resulting configuration changes
        - Results of periodic audits and assessments of the interlock program

<u>ODH Interlocks</u>

- Design Basis Requirements:
    - Control of hazardous energy must require associated interlock systems to be operational before introducing the source of hazardous energy. A temporary exemption to the operational interlock requirement may be granted during testing/commissioning where equivalent protection is provided. Operational

controls for the hazardous energy must be used to enable and disable the energy source, while the interlock system must only disable the energy source. The control system for the hazardous energy must require an operator action to re-enable the interlock system, thereby re-establishing hazardous energy after the interlock system has disabled the energy source.
  - The probability for the interlock system to fail must be extremely remote, as defined by Hazard Analysis Subject Area, if High Risk hazards exist within the protected boundary.
  - The probability for the interlock to fail must be remote, as defined by Hazard Analysis Subject Area, if Moderate Risk hazards might exist within the protected boundary.
  - The probability for the interlock system to fail can be classified as occasional, as defined by Hazard Analysis Subject Area, if Low Risk hazards might exist within the protected boundary of the protected system.
- Technical Design Requirements:
  - The level of protection afforded by interlocks must be appropriate for the level of hazard, as follows:

Requirement / Category	Redundant Interlock Protection Systems	Fail Safe	Enforced Sequence Search (Where Appropriate)	Operator Action Required for Restart	Periodic Testing
High Risk	Yes	Yes	Yes	Yes	Yes
Moderate Risk	No	Yes	Yes	Yes	Yes
Low Risk	No	No	No	Yes	Yes
Routine Risk	No	No	No	No	Yes

  - The protective functions of the interlock system must render the energy source/system safe during the most likely interlock system failure events (e.g., loss of power/pressure, open circuit, short to ground, and single component failures)
  - Redundant circuits must not share cables and must be separated physically on circuit boards and terminal strips. Redundant systems must be configured differently
  - Cable runs must be made in accordance with good practices and the National Electric Code
  - Suitable protection must be provided to preserve the physical integrity of all system components. Components and materials must be resistant to damage from heat, radiation, and water, as appropriate
  - A configuration management program must be established to include the interlock system logic and interfaces to peripheral equipment, such as power supplies for the interlocked equipment

- All interlock lines and components must be labeled and readily identifiable
- The interlock system must be modular in design so that the interlocks for different parts of the facility can be serviced independently. If the facility is designed to allow portions to be serviced or modified while the remainder is in operation, such as individual experimental areas, then there must be a means to reconfigure/disconnect the part of the interlock system that is being serviced from the rest of the system without compromising safety
- The design of the interlock system must provide for complete testing, with the effort and disruption required by such tests within practical limits
- There must be an independent review of the interlock system's design by persons experienced in the design and operation of personnel protection interlock systems. There must be a record kept of the findings of the review and the response to each finding
- A controlled means for reconfiguration and bypassing of components of the interlock system must be established and documented
- A well-designed interlock system for Catastrophic and Critical hazard systems must include sequenced and timed inspection stations for area interlocks, warning lights, audible alarms, and emergency off- switches
- Where practicable, indication of the status of the interlocks must be shown on the control console
- Interlocks must not be used as routine shutdown mechanisms. The design must provide for an orderly means of turning off sources of hazardous energy before access is attempted to an Interlocked Area or interlocked energy source
- Computer-based interlock systems implemented for protection against Catastrophic hazards must be equivalent to relay-based systems and conform to the following additional requirements:
  - Redundancy must be provided by independent, dissimilar computer systems with logic software written by different programmers working independently
  - Computers for these systems must be dedicated solely for this use, and all external links must be eliminated or strictly controlled
  - Where parts of the protection system need to be decommissioned for servicing or modification, it must be demonstrated that signals from the decommissioned part cannot influence the active part of the interlock system. Breaking software links is not sufficient for isolation
- Physical access controls must not prevent personnel from leaving an interlocked area, consistent with requirements of the New York State Building Code (NYSBC)

- Interlocked Area Requirements:
  - A central function of hazardous-energy protection systems is to control personnel access to hazardous areas. Where only hand access is possible, as in control cabinets and power supplies, door locks and/or switches may be sufficient. Areas where personnel entry is possible must also have provisions for search confirmation, hazard warning, emergency stop, and life safety. The following apply to interlocked areas where personnel entry is possible

- Emergency "Crash" devices must be provided, and must be clearly visible, labeled, and readily accessible. Activation of emergency devices in the Interlocked Area must re-initialize the system and require a reset at the location of the activated emergency device
- Emergency exit must be possible at all doors in conformance with NYSBC
- Emergency entry into the area must also be provided
- Status signs or clearly labeled status lights must be provided at entry doors
- Where personnel entry is possible, Interlocked Areas must be searched before the energy source is turned on to ensure that there aren't any people still inside
- Where appropriate, the following applies:
    - Sequential-search confirmation buttons, or check stations, must be placed to ensure that the area is comprehensively searched. These check stations also may be used to set the interlocks on the doors as they are passed. If any door is opened after being set, or any emergency device is activated inside the interlocked area, the system logic must abort the search
    - After completing the search, there must be both audible and visible warnings providing a time interval before enabling of the hazardous energy. Warnings must be limited to within interlocked areas to avoid de-sensitizing personnel. If the lights are dimmed as the visible warning, then the level of illumination must remain strong enough for personnel to see clearly to rapidly leave the facility or take action to prevent actuation of the hazardous energy. The duration of the warning interval must be sufficient for an individual to reach an emergency "crash" device or to leave the area
    - The search procedures must be rigorous and carefully designed, and must be reviewed periodically
- A Controlled Entry mode may be provided wherein a few workers are permitted to enter an already searched area to carry out specific tasks. When all personnel leave the area, it may be returned to the "ready" condition without a search. The safety of such entries depends critically on strict controls and well-defined procedures, which may include one or more of the following
    - A permanent, written record of each Controlled Entry must be made and include the name of each person entering, and the time of entry and exit. This record must be maintained as a part of the permanent operations record
    - Each passage, into or out of an entry door, must be controlled by an operator. The interlock system must require that an operator action permits the door to open without aborting the searched condition of the area. This control may be exercised remotely, from the control room for example, if suitable surveillance is maintained by television or other means
    - The accounting for each person entering the Interlocked Area under Controlled Entry mode must be by accountable-key-exchange (key-tree), or rigorous login/logout procedure, or an equivalent system where conditions dictate. In new facilities or substantial extensions of existing facilities, key-trees are recommended

        - Administrative limits must be placed both on the number of people allowed into the area when placed in the Controlled Entry mode and on the maximum elapsed time that the area is kept in the Controlled Entry mode
        - After a Controlled Entry event is complete, the entry record must be reconciled and a warning interval must be required before return to the "ready" condition
    - The interlocked area must have a device that activates a conspicuous visible and/or audible alarm so that in the event of unsafe entry, personnel entering the area and the operator are made aware of the entry
- Specific Hardware Requirements for Critical Hazard Areas
    - An appropriate entry control program must be established. The fail-safe character of the interlock system is vital. The entry control program must include at least one of the following. One item alone does not necessarily constitute an adequate interlock system, therefore Department/Division review is particularly important
    - The interlock system must prevent entry to the area when Critical Hazards exist, or upon entry, must cause the hazard level to be reduced below that level defined as critical; also, it must prevent restart of the energy source until a manual reset is made
    - Control devices must activate a conspicuous visible or audible alarm if the hazard remains so that the individual entering the Critical Hazard Area through a control device is aware of the energy level and the Area Supervisor or designee are also made aware of the entry. Administrative procedures must define the required actions of personnel when alarms are activated
    - Entryways must be locked during operations, except when access to the area is required. Positive requirements for entry, including surveys of hazardous energy levels, must be made for the initial entry and periodically, as necessary, to assure that safe energy levels are maintained in accordance with administrative procedures
    - Control devices must automatically generate audible and/or visible alarm to alert personnel in the area before the use or operation of the energy source. These alarms must allow sufficient time to evacuate the area, or to activate a secondary control device to prevent the use or operation of the energy source. If the visual indicator should be turning out the lights, levels of illumination must be high enough so that personnel can rapidly leave the facility or take action to prevent actuation of the hazardous energy
- Specific Hardware Requirements for Catastrophic Hazard Areas
    - Catastrophic Hazard Areas, where personnel access is possible, require EACH of the four conditions detailed in the Specific Hardware Requirements for Critical Hazard Areas section (C.1.), and have the following additional requirements.
    - Access to interlocked areas must be controlled by locked gates that are equipped with two independent interlock devices. Each device must be capable of deactivating sources of hazardous energies if the area is improperly entered. Improper entry through the gate must activate an audible and/or visual alarm locally and at a central location, such as a control room.

    - In addition to being fail-safe, the interlock system must also be redundant, as defined in the subject area.
- Interlock Testing Requirements:
    - To assure that an installed interlock system is functional and not compromised, periodic testing is mandatory. There is no other way to verify that wiring errors, component failures, or other faults do not compromise the system. A successful testing program depends on a system design that accommodates testing, a well-designed series of tests, and the commitment of time and resources to accomplish the tests
    - A comprehensive functional test must be performed before an interlock system is placed in service. The test must require that each logic input is exercised and the appropriate intermediate logic action and protective response(s) is verified. Redundant chains must be independently exercised. The test must not depend too heavily on system logic for interpreting responses, since logic configuration also must be tested. Other required functions, such as time delays, status indicators, and warnings, must also be tested
    - A functional test must be performed after modifications or maintenance is completed on an interlock system or any system that might affect the interlocks. The testing must cover all parts of the system that could be affected by an error or fault in the portion of the system that has been worked on. Maintenance and service actions that are deemed not to require testing must be declared and justified in auditable maintenance documentation
    - When the system is reconfigured, it must be tested before operating the facility or device to ensure that only the desired function is altered and that all other parts of the system still function properly
    - An interlock system must not be used for protection unless a complete functional test has been done within the specified testing interval. The testing interval must be commensurate with the level of hazard. For Catastrophic and Critical systems, the interval must be six months. With proper justification, a grace period of up to two months may be approved by departmental configuration management. For all other systems, the interval must not exceed one year
    - Tests must be executed with a prepared checklist, which includes a sign-off by personnel performing the interlock system test and a check-off for each observed input and response. The checklist will ensure a complete and proper test and provide an auditable record
    - The system's test program must be independently reviewed. This review must be conducted in concert with the review of the system's design
- Documentation Requirements:
    - A written functional description of the interlock system, including:
        - Hazards protected against;
        - Means of protection;
        - Entry and search protocols, including announcements, alarms, and emergency responses;
        - Response of the system in normal operation; and
        - Responses of the system to fault conditions and foreseeable personnel error, as well as to equipment failure.

    - A record of management approval of the system
    - Documentation of the physical and electrical configuration of the system, including circuit schematics, logic diagrams, wiring diagrams, and component specifications
    - A documented configuration management program for controlling design, modifications, and replacements, and maintaining complete and accurate documentation
    - Written test procedures that specify frequency of tests and their completeness, including prepared checklists to ensure complete functional and auditable records of such tests
- Administrative Control Requirements:
    - The high degree of reliability required of an interlock system comes both from the performance of the physical system and the effectiveness of the administrative controls, including procedures, training, testing, and control of modification. All work on the interlock system including design, construction, modification, and maintenance must be performed by personnel designated by the Department Chair/Division Manager as "authorized"
    - The configuration control program must include a definition of the review and approval process required for the design and/or modification of the system's function or logic
    - Bypassing is defined as the temporary task-specific (e.g., for testing and diagnosis) defeating of a single interlock function or group of functions. When the task is completed, the bypass must be removed immediately and the interlock system tested before returning it to full operation. All bypassing must be done in accordance with written, reviewed, and approved procedures
    - Reconfiguration is defined as modification of the interlock system for routine operation under a changed facility arrangement
    - When interlock systems are bypassed or reconfigured, an equivalent degree of safety must be provided. The proposal for either action must have prior review and approval at the level defined in this subject area. Unauthorized reconfiguration or bypassing of interlock systems is not allowed
    - Neither bypassing nor reconfiguration of the interlock system may diminish the level of personnel safety. Both actions require a review of the design and documentation before they are implemented. Alternate means of ensuring personnel protection must be examined as part of the review
    - Proper safeguards, for example a locked and tagged disconnects, must be in place before the interlock is taken out of service. The safeguard must be external to the system being worked on
    - There must be a clear definition of procedures and restrictions on interlock maintenance
    - The system must not be returned to service until it has been suitably tested as defined in this subject area

Accelerator Readiness Review Plan

General Lines of Inquiries (LOIs)

Table of Contents

Table of Contents 1
Required Documentation 2
Safety Assessment Document (SAD) 2
Accelerator Safety Envelope (ASE) 2
Unreviewed Safety Issues (USI) 2
Contractor Assurance System (CAS) 2
Safety Configuration Management (CM) 3
Accelerator Systems 4
Commissioning Plan & Fault Studies 4
Credited Controls (CC) 4
Accelerator Operator Training and Qualification Program 4
Accelerator Commissioning Procedures 5
Work Planning and Control Related to Accelerator Safety 5
Cyber Security 6
Software QA 7
Industrial Safety Systems 8
General Radiological Protection Program 8
Emergency Management Program 9
Lessons Learned Program 9
Records Management 9
Conduct of Operations 10

Required Documentation

Safety Assessment Document (SAD)

	LOI
1.	Interview selected management /staff involved in SAD development
2.	Determine adequacy of safety analysis performed to support SAD
3.	Determine if SAD meets DOE O 420.2C requirements
4.	Determine if SAD provides adequate technical basis for ASE
5.	Determine adequacy of process to review and approve SAD
6.	Interview selected management /staff to determine knowledge of SAD requirements
7.	Determine adequacy of SAD to support commissioning

Accelerator Safety Envelope (ASE)

	LOI
1.	Interview selected management/staff involved in ASE preparation
2.	Determine if ASE addresses required controls and operating limits
3.	Determine if ASE meets DOE O 420.2C requirements
4.	Determine adequacy of process to review and approve ASE
5.	Interview selected management/operational staff
6.	Determine adequacy of ASE to support commissioning

Unreviewed Safety Issues (USI)

	LOI
1.	Determine if USI process meets DOE O 420.2C requirements
2.	Interview those involved in USI process development and management
3.	Determine if USI process will be adequately linked to Configuration Management program
4.	Determine adequacy of USI process to support commissioning

Contractor Assurance System (CAS)

	LOI
1.	Determine if CAS provides a comprehensive internal assessment process
2.	Determine if the CAS Program uses external assessment: employs peer reviews and assessments that include accelerator subject matter experts from other accelerator facilities
3.	Determine CAS program adequacy to support commissioning

Safety Configuration Management (CM)

	LOI
1.	Determine if the configuration of Credited Controls are properly managed during accelerator operation and maintenance
2.	Determine if the accelerator controls system is protected against un-authorized access
3.	Determine if configuration management is applied to defense-in-depth controls on a graded approach
4.	Determine if the configuration management program is adequate to support commissioning

Accelerator Systems

Commissioning Plan & Fault Studies

	LOI
1.	Commissioning Plan fully describes roles, responsibilities, accountabilities, and authorities that establish the expectations and duties of managers, supervisors, and operators for carrying out the commissioning/ operations and any related documented authorizations
2.	Commissioning Plan addresses staffing schedules, authority and reporting chain for operational, safety, and scheduling issues procedures (normal and emergency/contingency), administrative controls, and personnel training
3.	Commissioning Plan identifies or properly references engineered safety systems that will be operable for the accelerator
4.	Commissioning Plan identifies the operational characteristics for specific modes of commissioning needed to support the safety case for progressively higher power commissioning
5.	Determine adequacy of Commissioning Plan and fault studies to support commissioning

Credited Controls (CC)

	LOI
1.	Verify that Credited Passive, Active, and Administrative Controls in the ASE are installed and operational
2.	Verify that Credited Passive, Active, and Administrative Controls in the ASE are properly managed
3.	Verify that defense-in-depth controls also have Configuration Management applied on a graded approach
4.	Determine adequacy of Credited Controls to support commissioning

Accelerator Operator Training and Qualification Program

	LOI
1.	Review training program documentation and procedures
2.	Interview training manager regarding program
3.	Interview selected personnel regarding training
4.	Observe selected job assignments and compare with job-specific training
5.	Determine adequacy of training program to support commissioning

Accelerator Commissioning Procedures

	LOI
1.	Review procedure program documentation
2.	Interview staff responsible for assuring implementation of the procedure program
3.	Interview selected management/staff on their role in the procedure program
4.	Review selected operating procedures controlling approval for startup, beam authorization, and safety significant controls
5.	Review procedures required for commissioning readiness
6.	Interview staff on emergency response procedures
7.	Observe selected job assignments with job-specific procedures
8.	Determine adequacy of procedure program to support commissioning

Work Planning and Control Related to Accelerator Safety

	LOI
1.	Review work control program documentation
2.	Interview selected management/staff on their role in the work control program
3.	Observe selected job assignments with job-specific work controls
4.	Determine adequacy of work planning and control to support commissioning

Cyber Security

	LOI
1	There is a plan that addresses cyber security on a site-wide basis and specifically for accelerator controls
2	The cyber security risk assessment for accelerator controls adequately identifies threats and vulnerabilities specific to the operating environment
3	The cyber-risk assessment for accelerator controls adequately identified risks and counter measures to reduce risks to an acceptance level
4	There is an authority to operate the system used to control accelerator functions within acceptance risks
5	The cyber-security plan incorporates the following recommended practices and protocols: a. defense-in-depth by layering b. physical security c. network segmentation and isolation d. Internal/ external fire-walling e. mitigation of insecure processes and protocols f. access control from on and off-site g. authentication management h. user auditing i. configuration management including patches j. monitoring and use analysis k. vulnerability scanning and periodic l. Incident Response/Contingency Planning m. Control of external media devices n. Remote access
6	There are adequate personnel resources to maintain the cyber-security program and processes: a. personnel are trained and authorized
7	There are adequate fiscal resources to maintain the cyber-security program equipment through near-term software and hardware upgrades
8	There is adequate infrastructure to maintain and support cyber-security for accelerator controls
9	Software QA supports activities related to commissioning

Software QA

	LOI
1.	The development of accelerator controls and safety system software is governed by applicable standards
2.	The applicable standards require, at a minimum: a) written requirements or specifications b) software version management c) documentation
3.	Accelerator controls and safety system software have accurate configuration information from users/system owners for device control and data translation
4.	There are resources that allow controls and safety system software to be tested before implementation.
5.	The interface for programmers needing information or analysis data is controlled
6.	Software users are adequately trained and authorized depending on the level of control afforded by accelerator and/or safety system software before being allowed access
7.	There is an adequate user feedback mechanism to resolve software issues
8.	Accelerator controls and safety system software are configuration managed
9.	There are adequate personnel resources to maintain the accelerator controls and safety system software applications; personnel are trained and authorized
10.	There is adequate infrastructure to maintain and support accelerator controls and safety system software applications
11.	Software QA supports activities related to commissioning

Industrial Safety Systems

	LOI
1.	Are the industrial hazards of the system well understood?
2.	Were the hazards of the system considered during the design phase?
3.	Does the system design, where possible, use engineered safeguards to minimize industrial hazards during operation?
4.	Is the system design documented?
5.	Does the system interface to other industrial systems and is that interface documented?
6.	Does the system interface to the PPS?
7.	Are the documents available to staff that work on the system?
8.	Was the system checked to ensure it performed according to design when it arrived at the lab (or at the point of assembly)?
9.	Are there further operational checks needed before it is placed in service?
10.	Are there system integration checks needed before the systems is placed in service?
11.	Are the hazards of working on (installing, trouble-shooting, repairing, maintaining) the installed system mitigated on the basis of a laboratory industrial safety program?
12.	Are the hazards of working on the system mitigated as part of an integrated laboratory work planning and control process?
13.	Is the staff that works on the system qualified and are they authorized to conduct work on the system?
14.	Are there lessons learned from previous operational experience with this system? Have they been implemented?
15.	Are industrial systems ready to support commissioning?

General Radiological Protection Program

	LOI
1.	Does BNL RPP reflect scope of accelerator radiological hazards for prompt ionizing radiation and activated materials?
2.	Does the BNL RPP utilize lessons learned from internal and external events?
3.	Is a hierarchy of controls effectively implemented including engineering and administrative controls?
4.	Is BNL RPP effectively integrated with accelerator operations and other safety and health disciplines?
5.	Is BNL RPP effectively integrated as part of the laboratory work planning and control process?
6.	Is BNL RPP effective in maintaining radiological exposures to personnel are maintained as low as reasonably achievable (ALARA)?
7.	Is the BNL RPP providing adequate support to upgrade activities?
8.	Determine adequacy of radiation protection program to support commissioning

Emergency Management Program

	LOI
1.	Site has an emergency management program (EMP) supported by documentation and procedures
2.	EMP includes a technical basis document and an emergency management program plan
3.	EMP includes procedures relevant to accelerator operations
4.	EMP addresses onsite and offsite hazards (if applicable) and associated impacts for both normal operations and credible accidents
5.	BNL EMP benefits from programmatic lessons learned
6.	BNL effectively utilizes mutual aid relationships
7.	Accelerator Operations personnel have an effective understanding of EM
8.	Accelerator Operations personnel have an effective understanding of the application of programmatic lessons learned
9.	Observe function of site-wide notification system
10.	Determine adequacy of emergency response program to support commissioning

Lessons Learned Program

	LOI
1.	Review lessons learned program procedures and documents to verify coordinated site-wide program
2.	Verify that the program identifies routine and non-routine occurrences that elevate to the level of lessons learned
3.	Verify that the program identifies and evaluates lessons learned at other DOE and non-DOE facilities
4.	Verify that there is a program to effectively disseminate lessons learned to those best suited to use the information
5.	Verify that recent external accelerator-based lessons learned have been effectively evaluated and incorporated into current Accelerator Readiness Review
6.	Lessons learned processes effectively support commissioning

Records Management

LOI
Key records are identified
Records custodians for key records are identified
Records are managed and stored properly
Record management effectively support commissioning

Conduct of Operations

	LOI
1.	Interview management and staff involved in the development and implementation of the Conduct of Operations program
2.	Review Conduct of Operations procedures to determine overall adequacy of program
3.	Determine if Conduct of Operations program is adequately implemented
4.	Interview staff to assess knowledge of and implementation of Conduct of Operations program
5.	Determine adequacy of the Conduct of Operations program to support commissioning

Building 911
P.O. Box 5000
Upton, NY 11973-5000

BROOKHAVEN NATIONAL LABORATORY

managed by Brookhaven Science Associates
for the U.S. Department of Energy

C-A Accelerator Systems Safety Review Committee

Memo

date: *May 15, 2007*

to: *ASSRC Members and Guests*

from: *J.W. Glenn, R. Karol*

subject: ***Subcommittee Review and Walkthrough of ERL Klystron HV Power Supply and Transmitter on May 14 and 15, 2007***

May 14, 2007:
Members: J. W. Glenn*, J. Alessi, P. Bergh, P. Cirnigliaro*, A. Etkin*, P. K. Feng*, P. Ingrassia, S. Jao, R. Karol*, E. Lessard*, J. Levesque, G. McIntyre*, D. Phillips, F. Pilat, J. Sandberg*, M. Sivertz, J. Scott*, J. Tuozzolo, M. Van Essendelft*, J. Wright*, K.C. Wu
*** present**

Presenter: R. Lambiase, A. Zaltsman

Others Present: I. Ben-Zvi, V. Litvinenko, T. Nehring, A. Pendzick, D. Kayran

W. Glenn noted that reviews and walkthroughs are necessary for the major testing and use of systems at ERL, which could have significant safety concerns. This topic is one of these reviews. It was noted that the Klystron cost was $670K and the HVPS and transmitter cost $2.3M. In addition it was estimated that the impact of a Klystron failure on the ERL project could cause up to a one-year delay associated with significant program delay.

Radiation safety issues will be reviewed by the C-A RSC, who did an initial review last summer. D Beavis wrote us as to what will be required to test the klystron. [Minutes and email attached] Completion of RSC requirements will be included on our checklist.

Bob Lambiase described the system in detail while showing drawings and photographs. Many of the subcommittee members toured the system last Friday afternoon to educate themselves on the system layout. His presentation is in the ASSRC files.

The following issues need to be addressed by the project:

1. The 4160 switchgear needs to be reviewed for arc-flash including determining the proper PPE for breaker and associated switch operations.
2. All non-NRTL electrical equipment needs an Electrical Equipment Inspector to review these items.
3. The Klystron manufacturer needs to supply certification to the project that survival of the 32 gage wire in the filter tank that indicates that the Fast Shutdown system is working when tested, and meets specifications to protect the Klystron.

4. The Power Supply manufacturer needs to supply information to the project on what frequency that the Fast Shutdown system need be tested to ensure it will work to the required reliability [say a part in 10,000] when challenged.
5. The Kirk-Key systems for the transformer room and the Klystron room doors need to be approved by the Chief EE and an acceptance test completed. There needs to be a procedure for periodic maintenance on the Kirk-Lock system to ensure that it works properly and that it does not become misaligned allowing easy bypassing.
6. Sweep procedures need to be written for sweeping the transformer room and Klystron room.
7. When the Klystron solenoids are energized, measurements must be taken to determine the magnetic field hazards and to properly post the Klystron room.
8. The Klystron collector "close-in" lead shielding that is covered with sheet metal and held in place by metal bands, needs to be posted "Do Not Tamper – Close-in Shielding – Contact ERL Liaison Physicist to Remove or Modify".
9. The Crash switches to be installed in the transformer and Klystron rooms need to be treated as Life Safety devices and tested as per the BNL Interlock SBMS requirements.
10. The PLC and other software need to be controlled as per BNL SBMS requirements. See D. Passarello for details.
11. Initially the system will be operated by the RF group under the direction of R. Lambiase and A. Zaltsmann, the system experts.
12. Procedures and training need to be completed in the long-term when staff other than the system RF Group operates the system and when others than system experts are expected to respond to off-normal conditions and alarms.
13. Sensitive parameters in the PLC system need to be password protected.
14. D. Phillips will present more detail on the water cooling circuits. We asked that adequately sized relief valves be installed in portions of the water circuit that could be isolated and still have significant heat loads, consistent with appropriate ASME and piping code requirements.
15. The blower filters will most likely be contaminated with natural radiation. Disposal procedures need ensure RCT checks to determine the disposal path or decay in storage until the natural radioactivity has decayed.

The subcommittee adjourned at 1600 and is scheduled to reconvene at the system tomorrow, 5/15/07, at 1430 to 1600.

<u>May 15, 2007:</u>
Members: J. W. Glenn*, J. Alessi, P. Bergh*, P. Cirnigliaro*, A. Etkin*, P. K. Feng, P. Ingrassia, S. Jao, R. Karol*, E. Lessard*, J. Levesque*, G. McIntyre, D. Phillips*, F. Pilat, J. Sandberg*, M. Sivertz, J. Scott*, J. Tuozzolo, M. Van Essendelft*, J. Wright, K.C. Wu
*** present**

Presenter: R. Lambiase, A. Zaltsman

Others Present: T. Nehring, D. Kayran, N. Laloudakis

This meeting was to further explain the system. The Committee focused on providing guidance for the immediate testing of the 100 kV, 20 A main power supply and its associated filter and controls. Endorsement of this test will be for a ten day period only. The 4160 switch will then be LOTO'd by the Project Engineer. Further operation of the power supply will require completion of a full checklist.

Bob Lambiase conducted a walkthrough of the system including the 4160 switchgear, the transformer room, equipment, the filter tank, the filament and monitoring tank, the control cabinet, the transmitter, the klystron and wave guide components, the temporary dummy load, the water circuits and the blower circuits. D. Phillips talked a bit about the water systems. Pressure relief valves will be installed on trapped volumes in high power systems. The details are to be finalized. The committee concurred with the operation of service equipment for the system.

The logic of the Kirk-Lock system was reviewed while in the ERL control room using the associated Kirk-Lock drawing.

The subcommittee identified the following additional items of concern:

1. It is acceptable to just hang the transformer room grounding sticks for discharging the voltage. If any work is to be done the transformer room, grounding sticks must be clamped in place to prevent accidental removal.
2. The project must clearly identify life safety devices from equipment safety devices, including marking same on as-built drawings.
3. A clear emergency power shutdown procedure must be written and approved to allow an easy way to de-energize all ERL HV and electrical power to supporting systems. This will make it clear to all, including the BNL Fire/Rescue Group, when the area is in a safe state.
4. The old Halon system controls and signs in the trailer need to be removed.
5. The extras Kirk-Keys need to be given to Peter Cirnigliaro for safe keeping.
6. Acceptance testing of the Kirk-Key system needs to be completed and results filed with the LE as a record.
7. An acceptance test, confirming that the manual disconnect switch blades at the output from the 4160 Vac breaker disconnect and the installed meters are checked and show that the power has been removed, needs to be completed. Provide results to the LE to file as a record.
8. An acceptance test that the crash buttons used throughout the system needs to be completed to verify proper response. Provide results to the LE to file as a record.
9. The ASSRC Chair, with concurrence of subcommittee members, asks that the Transformer Room door switches be part of the Life Safety System and that an acceptance test be completed to verify proper response. Provide results to the LE to file as a record.
10. For the PS test a temporary crash button equivalency can be removal of the grounding sticks by the trained operator that opens the room. This system shall also be tested and results filed.
11. Procedures need to be written for response to insulating oil leaks including the dummy load used for testing the HV power supply.

After the meeting was adjourned at 1610, a smaller group (W. Glenn, J. Sandberg, R. Karol, R. Lambiase and A. Zaltsman) met in the ERL control room to determine those items identified from yesterdays and today's meetings that need to be completed prior to commencing the power supply test into the low current dummy load later this week. Those items are:

1. The 4160 switchgear powering the Transformer Room needs to have the proper PPE determined for operating the breaker (**CK-01, J. Sandberg**).

2. Visually verify that the 4160 breaker mechanical disconnect switch blades open when the switch is open and verify voltage is removed using installed meters (**CK-02, A. Zaltsman**).
3. The Kirk-Key system for the Transformer Room needs to be approved by the CEE. Provide documentation of approval to the LE for inclusion into the ERL document files (**CK-03, J. Sandberg**).
4. Give extra Kirk-Keys to Peter Cirnigliaro (**CK-04, D. Phillips**).
5. A Sweep Procedure needs to be written and approved for closure of the Transformer Room (**CK-05, A. Zaltsman**).
6. An acceptance test needs to be conducted to verify that the three Transformer Room grounding hooks trip the system when removed from their storage position (**CK-06, R. Lambiase**).
7. A method is needed to clamp the grounding sticks in place if any work is being performed on the system that requires the system to be de-energized and grounded (**CK-07, R. Lambiase**).
8. Write a simple procedure to de-energize the entire ERL HV power supply and electric power to support systems (one breaker and one disconnect switch). Provide a copy to the BNL Fire/Rescue Group (**CK-09, R. Lambiase**).
9. Have an approved procedure for how to respond to an oil leak in the dummy load, filter tank and the filament and monitoring tank. Joel Scott should review the procedure (**CK-10, R. Lambiase**).
10. 4160 Volt Breaker LOTO'd at the end of test (**CK-04, D. Phillips**).

A separate MCR checklist will be written to include the remaining items not covered in the dummy load checklist.

Dist: ASSRC
Guests
D Lowenstein
T. Roser
D Passarello

Building 911
P.O. Box 5000
Upton, NY 11973-5000

BROOKHAVEN NATIONAL LABORATORY

managed by Brookhaven Science Associates
for the U.S. Department of Energy

C-A Accelerator Systems Safety Review Committee

Memo

date: *April 22, 2008*

to: *ASSRC Members, RSC Members and Guests*

from: *J.W. Glenn, D. Beavis, R. Karol*

subject: ***Joint Meeting for ASSRC/RSC Review of Energy Recovery Linac (ERL) Safety Analysis Document and Accelerator Safety Envelope (ASE)***

ASSRC Members: J. W. Glenn*, J. Alessi*, P. Bergh*, P. Cirnigliaro*, A. Etkin*, P. K. Feng*, P. Ingrassia*, S. Jao, R. Karol*, E. Lessard*, J. Levesque, G. McIntyre*, D. Phillips*, F. Pilat*, D. Robbins, J. Sandberg*, J. Scott*, M. Sivertz*, J. Tuozzolo*, M. Van Essendelft, J. Wright, K.C. Wu
*present

RSC Members: D. Beavis*, L. Ahrens, P. Bergh*, I.H. Cheng, A. Etkin*, J. W. Glenn*, R. Karol*, E. Lessard*, W. Mackay*, J. Reich*, J. Sandberg*, K. Yip, J. Jamilkowski,*, T. Shrey
*present

Presenters: E. Lessard, R. Karol

Others Present: I. Ben-Zvi, A. Burrill, D. Kayran, J. Maraviglia, D. Pate, P. Sullivan (DOE), Y. Than

Ed Lessard began the meeting by noting that this was a joint meeting of the RSC and ASSRC to review the draft ERL SAD and ASE dated April 4, 2008. The PowerPoint presentation slides are included in the minutes for each committee files. All comments after the meeting are welcome and will be considered. The ERL is a stand alone electron accelerator which requires its own BNL approved SAD, an Accelerator Readiness Review (ARR) conducted by an independent committee appointed by the BNL Deputy Director for Operations, and a DOE BHO approved ASE. The reason for this is that it can produce radiological areas. The SAD and ASE are being presented to the committees at this meeting. Following incorporation of comments from the internal C-AD committee reviews, the draft SAD and ASE will be presented to the BNL ESH Committee (LESHC) for their review. Following incorporation of LESHC comments, these documents will be sent to the BNL Deputy Director for Operations for SAD approval and transmittal of the ASE to the DOE-BHO for approval.

The current schedule for SAD, ASE and Conduct of Operations reviews; and milestones for actual ERL pre-commissioning tests, commissioning and operations was reviewed. The projected lifetime of ERL is a few years.

ERL produces an electron beam at injection energy of 2 to 3 MeV to a transport line leading to a superconducting RF cavity which increases the electron energy to 20-25 MeV. The bunch is then circulated in the ERL ring, returns to the RF cavity where the voltage is 180 degrees out of phase to allow recovery of the bunch energy to the RF cavity. The used bunch energy is reduced to about 3 MeV and sent to the water cooled beam dump. This is a research and development facility which will prove the ability to install electron cooling at RHIC to keep the ion bunch density high resulting in higher luminosity at the current values of intensity. This will allow for faster data gathering, improved data statistics and result in the ability to look at rarer events.

Lessard reviewed the SAD and ASE content, Chapters 1 through 3 and 5 through 8. R. Karol reviewed the results of the Hazard/Safety Analyses in Chapter 4. Most hazards are conventional hazards and are treated the same as any industrial hazard. The hazards that were analyzed in detail were radiation and oxygen deficiency. There are no new hazards at ERL that are not currently present at other C-AD facilities.

It was noted that Appendix 5, Fault Study Results, will not be entered into the SAD until the machine is operational and the fault studies are completed. This practice is acceptable and allows for maintaining the fault study records in a known, easy to find location.

The following recommendations/questions were made by the Committees:

1. The ASSRC Chair requires that the potential for ozone formation in the ERL cave be evaluated and compared with the allowable concentrations.
2. The ASSRC Chair asked that more details on how electrical power consumption will be minimized be added to the SAD while operating ERL as part of the Environmental Management System description.
3. The RSC Chair stated that committee members should get any comments or questions on the text or calculations to Lessard or Karol within the next week.
4. J. Alessi and W. MacKay asked that an explanation be given as to why the calculated dose from the laser port penetration is relatively high compared to other ERL cave penetrations in Chapter 4. This may be in error.
5. J. Alessi questioned the slide that indicated the RF radiation is transported in vacuum pipe. It is transported in a waveguide not under vacuum, and in the evacuated portion of the fundamental power coupler. This description needs to be better stated in SAD Chapter 3.

Dist:	ASSRC	D. Passarello	
	Guests	T. Roser	D Lowenstein

Building 911
P.O. Box 5000
Upton, NY 11973-5000

BROOKHAVEN NATIONAL LABORATORY

managed by Brookhaven Science Associates
for the U.S. Department of Energy

C-A Accelerator Systems Safety Review Committee

Memo

date: *June 11, 2008*

to: *ASSRC Members and Guests*

from: *J.W. Glenn, R. Karol*

subject: ***Subcommittee Walkthrough of ERL Klystron System on June 11, 2008 in Preparation for Commissioning***

Members: J. W. Glenn*, J. Alessi, P. Bergh*, P. Cirnigliaro, A. Etkin, P. K. Feng*, P. Ingrassia, S. Jao, R. Karol*, E. Lessard*, J. Levesque, G. McIntyre, D. Phillips*, F. Pilat, J. Sandberg, M. Sivertz, J. Scott*, J. Tuozzolo, M. Van Essendelft, J. Wright, K.C. Wu

Presenter: A. Zaltsman, R. Lambiase, K. Smith, N. Laloudakis

The ERL Klystron power supply has been tested using the power supply dummy load and is now functional. ERL would like to test the klystron at low energy, up to 10 kV cathode potential, in preparation for a visit by the klystron manufacturer (CPI) to assist during commissioning at full power during the last week of this month.

Phase I test, scheduled for later this week, consists of running the klystron at low power up to 10 kV cathode voltage and about 0.5 amperes. No RF will be transmitted for this test. This test will assure CPI that all sub-systems are fully functional and no time during CPI's visit will be spent trouble-shooting interlocks.

Tasks currently being completed for the Phase I testing, before applying DC voltage to klystron include the following:

- check all interlocks for klystron
- cooling water system pressure and flow tested and functioning
- air cooling functioning
- temperature controls operating
- arc detectors operating
- filled klystron cable connection box with insulating oil
- move cables for vacuum pumps
- wire cable capture interlocks
- moved HV cables from HVPS dummy load to klystron
- wire-in color display lights for annunciation of klystron status
- wire-in crash buttons in klystron room and PS room
- install short on the end of waveguide RF test circulator and dummy load

To begin the Phase I testing the klystron focusing magnet power supplies and the cathode filament will be turned on without any cathode accelerating voltage. Then the following will be performed under the direct supervision of the system experts, A. Zaltsman and R. Lambiase:

- the magnetic fields and the filament voltage will be checked in the klystron room
- current sweep procedures will be used to sweep and lock the PS and klystron rooms
- the klystron PS will be turned on at the transmitter control panel
- the accelerating voltage will be set to 5-10 kV
- observe voltage read back from the supply.
- observe some cathode current.

This will conclude the Phase I tests. Phase II commissioning testing will then take place the week of June 23rd. Phase II will include running the klystron at full DC accelerating voltage and if everything goes according to plan the klystron power will be increased in 5 to 10 kV steps up to 1 MW of RF power.

Radiological Control Technicians will be there during Phase I and II testing to measure the gamma dose rates and properly define the areas for radiological controls. Peter Cirnigliaro will do the RFI/EMI and magnetic field measurements around the magnets, RF waveguides, RF dummy load and RF circulator.

A. Zaltsman and K. Smith explained how warning light system works at the klystron and HVPS rooms and by the transmitter control panel station. A green light means that the 4160V breaker output is grounded, the safe state. A flashing red light an audible buzzer means that the 4160V supply is not grounded. When the flashing red light turns solid red, the power to the system is on. The crash buttons turn off the 208V and the 100kV supply.

The subcommittee agrees that testing can commence following completion of planned preparations and the following checklist items:

1. Label the Klystron Room <u>and</u> HVPS Room red crash buttons. Also put signs by the warning lights in both of these rooms noting where the crash buttons are located (**CK-01**, Zaltsman)
2. The C-AD Chief EE to verify that the capture of the HVPS room grounding sticks is adequate (**CK-02**, J. Sandberg)

The following Action item is assigned:

1. Have a periodic maintenance program in place, annually was suggested, to verify the tightness of the HVPS fuse connections in the HVPS room to prevent overheating (**ACT-08-02**, Zaltsman. ASSRC-Feng, due 6/09).

Dist:	ASSRC	J. Kewish
	Guests	D. Passarello
	D Lowenstein	D. Beavis
	I. Ben-Zvi	
	T. Roser	
	V. Litvinenko	

Building 911
P.O. Box 5000
Upton, NY 11973-5000

BROOKHAVEN NATIONAL LABORATORY

managed by Brookhaven Science Associates
for the U.S. Department of Energy

C-A Accelerator Systems Safety Review Committee

Memo

date: *January 22, 2009*

to: *ASSRC Members and Guests*

from: *J.W. Glenn, R. Karol*

subject: ***Walkthrough of ERL for 5-Cell Cold Emission Testing on 1/22/09***

Members: J. W. Glenn*, J. Alessi, P. Bergh, P. Cirnigliaro*, A. Etkin*, P. K. Feng, P. Ingrassia, S. Jao, R. Karol*, E. Lessard*, J. Levesque, G. McIntyre*, D. Phillips*, F. Pilat*, J. Sandberg*, M. Sivertz, J. Scott*, J. Tuozzolo*, M. Van Essendelft*, J. Wright, K.C. Wu
*Present

Presenters: G. McIntyre, Y. Than, A. Burrill, D. Weiss, J. Reich

Others Present: V. Litvinenko, P. Sullivan (DOE), C. Seniuk (DOE), D. Beavis (RSC Chair), R. Todd, D. Pate, N. Laloudakis

This review was for the operation of the cryomodule containing the electron cooling superconducting RF (ECX) cavity for cold emission testing, the first test of the Energy Recovery Linac. The system is made up of 5 main components: (1) the accelerating cavity cryomodule and associated cryogenic and vacuum systems, (2) the 50 kW RF system used to excite the cryomodule, (3) the PASS system, (4) the pumping and gauging controls for vacuum and cryogenics and (5) the Machine Protection System. The cryomodule and cryogenic piping are shown in Figure 1.

The first test of the system will be a simple cryogenic cool down to 4K to test the cryogenic system and ensure all cryogenic systems are operating correctly. This will be followed by a separate test in which RF power will be applied to the cavity, at either 2K or 4K, to measure the performance of the cavity in the cryomodule. Initial RF will be supplied with an analyzer with only a few watts of power, thus no RF or X-ray hazards exist. Later testing will include the ERL 50 kW RF power.

The Committee will address at this walkthrough all three proposed steps of the Cold Emission Tests which are scheduled to begin the end of February of this year.

4K Helium Cool down – no 2K Helium Pumping: This will be a simple cryogenic cool down to 4K to test the cryogenic system and ensure all cryogenic systems are operating correctly. Tune and Q may be checked with a network analyzer. With the roof off this will not be an ODH area, thus

- No vacuum pumping to cool below 4K (this is not a requirement to prevent ODH posting)

- No ODH fans needed
- PASS not required to be operable
- No 50 kW RF power to be used
- Only network analyzer to be used to determine Q-value of cavity
- CHIPMUNKS not in place because no radiation will be generated
- ERL Cave Blockhouse roof not in place

This test will be followed by a separate test in which RF power will be applied to the cavity, at either 2K or 4K with the roof on, to measure the performance of the cavity in the cryomodule. For this configuration with the roof on, the cave will be posted as ODH 0.

2K Helium Cool down, no 50 kW RF power:

- Pump on cavity reduce helium temperature to 2K
- ODH fans required to be operable
- PASS required to be operable
- No 50 kW RF power to be used
- Network analyzer to be used to determine Q-value of cavity
- CHIPMUNKS not in place because no radiation will be generated
- ERL Cave Blockhouse roof in place

2K Cool down with 50 kW RF power on:

- Pump on cavity reduce helium temperature to 2K
- ODH fans required to be operable
- PASS required to be operable
- CHIPMUNKS required because X-rays can be produced
- Klystron RF power to be used - interlocks required

The potential hazards for these tests are radiation, ODH, electrical, RF, pressure and cold surfaces. Radiation hazards and controls were reviewed by the Radiation Safety Committee and the RSC Chair was at this walk through. They will have an RSC checklist to assure the controls of radiation are in place. ODH was reviewed for two cases: (1) with the ERL cave roof off and no operating ODH exhaust fan and (2) with the ERL cave complete and the ODH exhaust fan operable. Case (1) results in >19% oxygen in NEBA[1] thus there is no oxygen deficiency hazard. Case (2) was already reviewed and is included in the ERL Safety Analysis Document – this is an ODH 0 classification.

G. McIntyre and Y. Than reviewed the testing for the case when the ERL cave roof is off. There are two 500 L Dewars used for this test. These Dewars are DOT certified. One is outside the cave on the Klystron room side which is used to fill the system and the other is in the cave and is used to cool the power coupler. The cavity reliefs all relieve to the common vent header which vents all gas out the west cave wall into NEBA. All reliefs are certified and tested to code. The venting helium during normal operation boil-off is sent to the ERL pump room building north of B912. This gas will be either vented to atmosphere from the pump room or recovered for further use. D. Phillips noted that the NEBA fire detection system is maintained operational. Y. Than noted that the ERL refrigerator will be operational in the summer of CY09.

D. Weiss reviewed the vacuum system and noted that the controls use a Vacuum Group PLC.

[1] R. Karol, ODH Classification in NEBA for 5-Cell Cavity Test, December 15, 2008.

The vacuum and recovery system in the pump room were reviewed by Y. Than and G. McIntyre. This is the only system in this room that will be used for the 5-Cell testing.

A.Burrill reviewed the systems in the ERL control room. J. Reich discussed the PASS system and the critical devices. He noted that final approved drawings for some critical devices are still being completed. The verification and validation and certification testing is completed except for the ODH exhaust fans and the 50 kW RF power contactor which are not needed until later in this testing phase.

It was noted that the expectation is that a single helium fill of the 5-Cell cavity will last about 4 to 6 hours for these tests.

N. Laloudakis noted that the 50 kW RF transmitter power supply was already reviewed by ASSRC and that P. Cirnigliaro has been performing RF leakage testing as the wave guide was constructed. All measurements have shown safe levels of RF and this transmitter is tested by the RF Group monthly.

The following items were identified by the ASSRC members and will be included in the MCR Checklist used for each phase of this testing:

1. To control the prevention of routine operation but allow for device testing, Yellow tags will be placed on the cryogenic fill valve over the Dewar to prevent LHe from being introduced into the area and on the 50 kW RF amplifier to prevent 50 kW RF system from being fed to the cavity. Tags should list names of persons who are permitted to do the device testing. The correct tags can be obtained from the ESSHQ Division (**CK01 -** A. Burrill)
2. The pipe supports for the cryogenic system and Dewar piping need to be reviewed for adequacy, correct installation and code compliance (**CK02 -** J. Tuozzolo)
3. Any surfaces that have cold fluids that could be hazardous to personnel need to be marked with the SBMS warning sign (**CK03 -** A. Warkentien)
4. An approved fill procedure for Dewar and 5-Cell Cavity filling needs to be in place. This procedure needs to include 1) a requirement that the area outside the ERL cave where the relief vent discharges be roped off to keep personal away from the area when helium is present in the system and 2) that the NEBA crane be locked out and personal are prevented from climbing to the crane to prevent exposure to accidental helium release (**CK04 –** Y. Than)
5. The cable trays in the ERL pump room need to be inspected to verify that they are properly grounded and bonded (**CK05 –** P. K. Feng)
6. Verify that all electrical items in the ERL control room are NRTL listed or conduct a documented EEI inspection (**CK06 –** P. K. Feng)
7. Electrical items in the pump room and ERL control room that are not NRTL listed need to have documented reviews by an EEI (**CK07 –** J. Sandberg)
8. OPMs need to be written and approved to address response to alarms and emergencies and to address monitoring requirements during operation and when ERL Control is not staffed (**CK08 –** A. Burrill)
9. When not staffed consider remote alarms to MCR and CAS B940 to warn of abnormal conditions (**CK09 -** D. Phillips)
10. The following QA1 drawings of the PASS critical devices need to be approved: Low-level RF device enable, 50 kW 480VAC contactor, 4160 VAC Klystron contactor, 4160 VAC reach back contactor before PASS is certified for use (**CK10 –** A. Zaltsman, D. Phillips, R. Lambiase)

Dist: ASSRC
Guests
D Lowenstein
I. Ben-Zvi
T. Roser
D Passarello

Figure 1 - The ECX Cavity (bottom) with the liquid helium ballast tank (above) and the associated cryogenic piping.

Building 911
P.O. Box 5000
Upton, NY 11973-5000

BROOKHAVEN NATIONAL LABORATORY

managed by Brookhaven Science Associates
for the U.S. Department of Energy

C-A Accelerator Systems Safety Review Committee

Memo

date: *March 11, 2009*

to: *ASSRC Members and Guests*

from: *J.W. Glenn, R. Karol*

subject: ***Subcommittee Review of ERL 5-Cell Cold Emission Testing at 4.5 K and 2K LHe Temperature with GHe vented through the ERL Pump House***

Members: J. W. Glenn*, J. Alessi, P. Bergh, P. Cirnigliaro*, A. Etkin*, P. K. Feng, P. Ingrassia, S. Jao, R. Karol*, E. Lessard*, J. Levesque, G. McIntyre*, D. Phillips*, F. Pilat, J. Sandberg, J. Scott, M. Sivertz, Y. Than*, J. Tuozzolo, M. Van Essendelft, J. Wright

Presenter: R. Than

Others Present: I. Ben-Zvi, D. Weiss

This subcommittee meeting was called by the ASSRC Chair to review the ODH hazards and controls in the ERL pump house during the 4.5K and 2K cool down testing of the 5-cell cavity. The reason for this review is that helium gas will be passing through this building during the 5-cell cavity cool down before the pump house ODH exhaust fan system is operable.

The Chair noted that this review only covers the current first cool down testing, that is scheduled for this week. Future testing done before the ODH system is operable requires the ASSRC to revisit the hazards before further testing.

R. Than noted the following:

1. The SAD ODH analysis is based on a failure of a line on the higher throughput of the Sullair Compressor in the pump house which has yet to be installed, and hence is not to be used at all for this initial cool down testing.
2. The venting rates inside the vent piping in the pump house are estimated to be:
   a) From 300K to 4.5K, 10 -12 g/s of GHe set by the pressure in the low pressure Dewar and the cool down valve. A GHe leak into the pump house of 12 g/s would be ~150 SCFM.
   b) With the 2K vacuum skid running the flow rate is set by the pump motor loading, up to 6 g/s. This would be a GHe leak of ~75 SCFM.

Assuming that this GHe flow is vented directly into the pump house and comparing these flows to the ERL SAD He spill rate of 1150 SCFM shows that it would take ~10 minutes for the pump house oxygen concentration to fall to 18% with a 12 g/s spill rate. The pump house is a small building with two exits and the building exit time would be <30 seconds. The vent

pipe containing the GHe flow is only slightly above atmospheric pressure and the failure rate of the pressure boundary is $<<10^{-4}$/h.

The subcommittee members agreed that this information leads to the conclusion that the building did not have to be posted as an ODH area. However, for this single case, it is prudent to post the area as ODH 0 with an added posting requirement to wear a portable alarming oxygen monitor (POM - alarms at 19.5% oxygen concentration) when entering the pump house until the ODH system is operable. This is because there is no operating experience with this equipment. It was made clear that this hazard control exceeds the SBMS ODH requirements and is not to be the standard for future ODH conditions at C-AD.

The Cryogenic Group will have control of the activities in the pump house and will make sure that entrants are told to contact them immediately if their POM alarms. Also, when the vacuum pump is on in the pump house, the Cryogenics Group shall minimize work that is unrelated to the 2K cool down test.

Dist: ASSRC
Guests
D Lowenstein
I. Ben-Zvi
T. Roser
D Passarello

Building 911
P.O. Box 5000
Upton, NY 11973-5000

BROOKHAVEN
NATIONAL LABORATORY

managed by Brookhaven Science Associates
for the U.S. Department of Energy

C-A Accelerator Systems Safety Review Committee

Memo

date: *June 7, 2012*

to: *ASSRC Members and Guests*

from: *D. Raparia, P. Cirnigliaro*

subject: **Preliminary Review of ERL Cold Test, Snyder Hall 6/4/12**

Members: D. Raparia*, J. Alessi, P. Bergh, P. Cirnigliaro*, F. Craner, A. Etkin*, P. K. Feng*, J. W. Glenn, P. Ingrassia*, S. Jao, R. Karol, E. Lessard*, M. Kretschmann*, G. McIntyre*, D. Phillips, J. Sandberg*, J. Scott*, M. Sivertz, Y. Than*, J. Tuozzolo, M. Van Essendelft*, J. Wright

Presenters: G. McIntyre, B. Sheehy, M. Mapes, A. Zaltsman, Y. Than, D. Gassner, T. Rao, J. Reich, W. Xu, D. Kayran

Others Present: L. Snydstrup, D. Donaldson, G. Mahler, J. Maraviglia, R. Lambiase, V. Litvinenko

Presentations of the ERL cold test and first beam were made to the committee (see attached schedule). Systems required for first beam into a faraday cup were reviewed. Special attention was paid to the laser, cathode, and gun systems. Talks included a brief system description, identifying system hazards (utilization of the CAD Hazard Tool) and discussion of the means to mediate each hazard. The cryogenics, RF and laser systems have been through previous LESHC reviews. Presenters noted in their talks what reviews, if any, have been completed on their systems, by which committees, when the reviews occurred and where the review results are archived.

A discussion was held among committee members concerning the proposed Machine Protection System and its effectiveness in preventing significant programmatic damage to components of ERL. The committee was satisfied that the MPS would provide adequate protection.

The Committee would like the Project to address the following items:

1. Parameters need to be established for Documenting the Radiation Generation Device (RGD). The paperwork will submitted to RCD by A. Etkin. Approval by the BNL RGD Custodian will be on the ASSRC Checklist.
2. A low powered RF amplifier (300Watt) will be used for this test. A ASSRC sub-committee will review it's implementation.
3. Access Control to the ERL blockhouse will be reviewed by an ASSRC subcommittee when the 300 Watt RF Power supply is used.
4. Information concerning use of the low powered RF amplifier (300Watt) used for this test will be forwarded to the Radiation Safety Committee for review.

5. A Work Plan shall be generated for this test.
6. Please schedule an ASSRC walk though of the test setup before the system is energized

Dist: ASSRC
Guests
T. Roser
W. Fischer
D. Passarello
I. Ben-Zvi
V. Litvinenko

Accelerator System Safety Review Committee (ASSRC) Review of ERL Scheduled for June 4, 2012

An ASSRC review has been requested in preparation for the cold testing and first beam in the ERL. A walkthrough of the ERL by the ASSRC will be scheduled about a week after the review. The ASSRC review will help in preparation for the Accelerator Readiness Review needed before beam can be produced.

Systems required for first beam into a faraday cup will be reviewed. Special attention will be paid to the laser, cathode, and gun systems. Talks should include a brief system description, identify system hazards (utilization of the CAD Hazard Tool will be useful) and discussion of the means to mediate each hazard. The cryogenics, RF and laser are examples of systems that have been through previous LESHC reviews. Presenters should note in their talks what reviews, if any, have been completed on their systems, by which committees, when the reviews occurred and where the review results are archived. The remainder of the ERL is to be reviewed in detail at a separate meeting.

Agenda: Starting at 9:30 in the Snyder Seminar room of Building 911A

ERL Overview	Ilan Ben-Zvi	(10 minutes)	930
e-Gun with cathode	G. McIntyre	(15 minutes)	940
Detailed review of gun system and cathode			
Laser System	Brian Sheehy	(15 minutes)	955
Overview of complete ERL Laser system			
ERL Vacuum System	Michael Mapes	(10 minutes)	1010
Detailed discussion of e-Gun & first beam vacuum system			
RF Overview	Alexander Zaltsman / Robert Lambiase	(15 minutes)	1020
Overview of 5-cell and e-Gun RF systems			
Cryogenics Overview	Roberto Than	(15 minutes)	1035
Overview of complete ERL cryogenics system			
Beam Instrumentation	David Gassner	(15 minutes)	1050
Detail discussion of instrumentation for first beam			
Photocathode	Triveni Rao	(15 minutes)	1105
Detailed review of cathode deposition and cathode function			
PASS & ODH Systems	Jonathan Reich	(15 minutes)	1120

e- Gun Testing

Cold Emission Tests	Wencan Xu	(10 minutes)	1130
Without and with a cathode			
First Beam – Laser to Cathode	Dmitry Kayran	(15 minutes)	1145

Close

Building 911
P.O. Box 5000
Upton, NY 11973-5000

BROOKHAVEN NATIONAL LABORATORY

managed by Brookhaven Science Associates
for the U.S. Department of Energy

C-A Accelerator Systems Safety Review Committee

Memo

date: *May 27, 2014*

to: *ASSRC Members and Guests*

from: *D. Raparia and P. Cirnigliaro*

subject: ***Walkthrough of Cathode Cart for ERL Test Setup for Stage 1 Low Power Gun Testing on May 27, 2014***

Members: D. Raparia*, J. Alessi, P. Bergh, P. Cirnigliaro*, F. Craner, A. Drees, A. Etkin*, P. K. Feng*, P. Ingrassia, S. Jao, R. Karol, M. Kretschmann, K. Kusche, E. Lessard, G. McIntyre, W. Needrith, D. Phillips*, J. Sandberg, M. Sivertz, J. Tuozzolo, R. Than*, M. Van Essendelft, J. Wright
**members present*

Guests: T. Seda, W. Xu,
Presenters: D. Phillips, D. Weiss, R. Anderson

This walkthrough was conducted in preparation for Stage 1 low power testing of the ERL gun. This test involves inserting a cathode into the superconducting (SC) ERL gun, RF supplied to the gun from the Klystron and beam generated by a laser beam focused on the cathode.
This walkthrough by the ASSRC completes checklist item 16 (**CK-16**) generated from the ASSRC walkthrough of *ERL Test Setup for Stage 1 Low Power Gun Testing performed on April 24, 2014*.

The walkthrough took place in the ERL block house with, D. Phillips, D. Weiss, R. Anderson, making presentations. The cathode cart was located in place and ready for operations. The Committee focused only on this area involved in the low power gun test, Stage 1. The committee discussed the use of low flow (0.25 gpm) of LN2 in the clean room, and determined that is was not a significant hazard. Operation Procedures have been written and implemented for the operation of the cathode cart. Bonding of the cart stand and the vacuum racks were found to be adequate.

Based upon the inspection during the walk through, the Committee found no items to be corrected.

Dist: ASSRC T. Roser
W. Fischer
D. Passarello
I. Ben-Zvi
Guests

Building 911
P.O. Box 5000
Upton, NY 11973-5000

BROOKHAVEN NATIONAL LABORATORY

managed by Brookhaven Science Associates
for the U.S. Department of Energy

C-A Accelerator Systems Safety Review Committee

Memo

date: *April 24, 2014*

to: *ASSRC Members and Guests*

from: *D. Raparia and R. Karol*

subject: ***Walkthrough of ERL Test Setup for Stage 1 Low Power Gun Testing on April 24, 2014***

Members: D. Raparia*, J. Alessi, P. Bergh, P. Cirnigliaro*, F. Craner, A. Drees, A. Etkin*, P. K. Feng*, P. Ingrassia, S. Jao*, R. Karol*, M. Kretschmann, K. Kusche*, E. Lessard*, G. McIntyre, W. Needrith, D. Phillips*, J. Sandberg, M. Sivertz, J. Tuozzolo, R. Than*, M. Van Essendelft, J. Wright
**members present*

Guests: T. Miller, L. Hammons, T. Seda, G. Mahler, J. Fite, M. Wilinski, P. Sullivan (BHSO)

Presenters: D. Phillips, D. Kayran, W. Xu, B. Sheehy

This walkthrough was conducted in preparation for Stage 1 low power testing of the ERL gun. BHSO has approved an exemption from the requirement to have an Accelerator Readiness Review (ARR) before this test begins[1] based on a C-AD USI Form written for the low power testing[2]. The beam power is limited to 70 W but the project expects that 7 W to 10 W will be sufficient to achieve the desired test results. Machine Protection System (MPS) will limit the beam power to desired level by monitoring beam current at the Integrating Current Transformer (ICT) and Faraday Cup. Stage 1 of the test involves inserting a cathode into the superconducting (SC) ERL gun, RF supplied to the gun from the Klystron and beam generated by a laser beam focused on the cathode. For this phase, the electron beam will be transported from the gun through beam pipe, a ICT, through an open gate valve whose position can only be changed manually in the current configuration, past a LOTO'd off dipole magnet (to prevent the beam from being transported to the 5-cell cavity), then to a Faraday Cup which acts as the beam stop. The start of this Stage 1 test is expected to be the week of May 8th and will continue for a few months. Stage 2 is another portion of the low power testing but all the components are not yet installed for this test so another ASSRC walkthrough will be scheduled for that test.

Following the low power testing, an ARR is scheduled for the end of July to allow high current gun testing to prove that the cathode can supply the required current for the future eRHIC upgrade. From that point on the exemption for low power testing will be withdrawn and the ARR process for all phases of ERL commissioning and operations will be in place up to the final configuration of the ERL as described in the C-AD SAD.

The walk through began in the ERL block house with Dmitry Kayran and Wencan Xu making the presentations. The Laser Room was reviewed by Brian Sheehy. The 2nd floor of the pump room

[1] Letter from F. Crescenzo (BHSO) to G. Goode (BNL) dated September 10, 2013, APPROVAL OF THE EXEMPTION REQUEST FOR THE PROTOTYPE ENERGY RECOVERY LINAC (ERL) LOW POWER TESTING
[2] C-AD Unreviewed Safety Issue Form for ERL Low Power testing dated 12/4/12.

trailer was reviewed by D. Phillips showing where the magnet power supplies and instrument powers supplies were located. The ERL Instrument Room and the ERL Control Room in the trailer adjacent to B912 NEBA was reviewed by Dmitry Kayran and Wencan Xu. The cathode cart which is currently being repaired was in place for the walk though. The Committee focused only on the areas involved in the low power gun test, Stage 1.

Based upon the inspection during the walk through, the Committee requires that the following items, 1 through 16, be completed before the low power testing begins:

1. The Committee understands that there is a large amount of work in progress at ERL in preparation for the upcoming low power testing, however, all areas of the ERL facility require a significant cleanup of unneeded materials and combustibles, including a thorough inspection for trip hazards. These problems need to be fixed (**CK-01, D. Phillips**)
2. Inspect the ERL facility and remove any daisy chaining of extension cords (**CK-02, D. Phillips**)
3. No extension cords can be in cable tray including Chipmunk cords (**CK-03, D. Phillips**)
4. Ensure that only Chipmunks that are expected to be moved to different locations over the ERL testing program are powered by extension cords (**CK-04, T. Curcio**)
5. Chipmunk NMO-182 has its cord enter the ERL enclosure through a shield block seam in the ERL roof. The RSC Chair requests that this be modified to an appropriate method for cave entry (**CK-05, T. Curcio**)
6. All beam line stands that will have powered equipment must be inspected and proper stand grounds installed (**CK-06, D. Phillips**)
7. The floor grating over water hoses and the Laser transport pipe to the gun needs to have yellow and black striped tape on each edge to make this step more visible to reduce a trip hazard (**CK-07, D. Phillips**)
8. Remove any temporary fire extinguishers in the ERL enclosure and ensure that permanent extinguishers are properly mount and labeled so they can be quickly located (**CK-08, D. Phillips**)
9. It is recognized that ERL construction began before the BNL Electrical Equipment Inspection Program was in place. All equipment that will be energized for the Stage 1 low power test must have a completed Equipment Electrical Inspection (**CK-09, P. K. Feng**)
10. There were a few loose disconnected cable tags found on the floor of the ERL enclosure. Inspect all loose cables at the ERL facility and hang properly filled out green Disconnected Cable tags out where required (**CK-10, D. Phillips**)
11. Electrical Panel PNL SCH-ERL-RP1 (912-P-204) on the west outside wall of the ERL enclosure need the load schedule checked and filled out as per NEC requirements (**CK-11, D. Phillips**)
12. Place Laser warning postings on the black laser mirror enclosure as required by SBMS (**CK-12, B. Sheehy**)
13. Update the Noise Posting on the entry door to the pump room trailer (**CK-13, P. Cirnigliaro**)
14. It appears that the heat tape cord that is on the outside ERL west enclosure wall by the helium manifold is daisy chained. Check this configuration and correct as necessary (**CK-14, D. Phillips**)
15. Although not directly related to the low power test, Stage 1, the ERL LE needs to contact ESSHQ Division to inspect the instrumentation on the water cooled beam dump before the “butter dish’ shield is installed over the beam dump (**CK-15, D. Phillips**)
16. Contact the ESSHQ Division to inspect the cathode cart when it is returned to its final position at the ERL gun (**CK-16, W. Xu**)
17. Contact the ASSRC when ready to begin Stage 2 of the ERL low power testing for another ASSRC walk through (**CK-17, D. Kayran**)

Dist: ASSRC T. Roser
W. Fischer D. Passarello
I. Ben-Zvi Guests
D. Passarello

C-A ACCELERATOR SYSTEMS SAFETY REVIEW COMMITTEE CHECK-OFF LIST

Prepared by: ___D. Raparia_____ Date: April 25, 2014
Approved by: _____ Date: _____

ASSRC Check-Off List for: ***Walkthrough of ERL Test Setup for Stage 1 Low Power Gun Testing on April 24, 2014***

Checklist items 1 through 16 must be completed before low power gun tests are started

Checklist Item #	Initials	Title	Description of check-off list item
CK-01		LE	All areas of the ERL facility require a significant cleanup of unneeded materials and combustibles, including a thorough inspection for trip hazards. These problems need to be fixed
CK-02		LE	Inspect the ERL facility and remove any daisy chaining of extension cords
CK-03		LE	No extension cords can be in cable tray including Chipmunk cords
CK-04		ISTS	Ensure that only Chipmunks that are expected to be moved to different locations over the ERL testing program are powered by extension cords
CK-05		ISTS	Chipmunk NMO-182 has its cord enter the ERL enclosure through a shield block seam in the ERL roof. The RSC Chair requests that this be modified to an appropriate method for cave entry
CK-06		LE	All beam line stands that will have powered equipment must be inspected and proper stand grounds installed
CK-07		LE	The floor grating over water hoses and the Laser transport pipe to the gun needs to have yellow and black striped tape on each edge to make this step more visible to reduce a trip hazard
CK-08		LE	Remove any temporary fire extinguishers in the ERL enclosure and ensure that permanent extinguishers are properly mount and labeled so they can be quickly located
CK-09		PDGL	All equipment that will be energized for the Stage 1 low power test must have a completed Equipment Electrical Inspection
CK-10		LE	There were a few loose disconnected cable tags found on the floor of the ERL enclosure. Inspect all loose cables at the ERL facility and hang properly filled out green Disconnected Cable tags out where required
CK-11		LE	Electrical Panel PNL SCH-ERL-RP1 (912-P-204) on the west outside wall of the ERL enclosure need the load schedule checked and filled out as per NEC requirements
CK-12		LS	Place Laser warning postings on the black laser mirror enclosure as required by SBMS
CK-13		SE	Update the Noise Posting on the entry door to the pump room trailer
CK-14		LE	It appears that the heat tape cord that is on the outside ERL west enclosure wall by the helium manifold is daisy chained. Check this configuration and correct as necessary
CK-15		LE	Although not directly related to the low power test, Stage 1, the ERL LE needs to contact ESSHQ Division to inspect the instrumentation on the water cooled beam dump before the “butter dish’ shield is installed over the beam dump
CK-16		ERLS	Contact the ESSHQ Division to inspect the cathode cart when it is returned

Checklist Item #	Initials	Title	Description of check-off list item
			to its final position at the ERL gun
CK-17		ERLPL	Contact the ASSRC when ready to begin Stage 2 of the ERL low power testing for another ASSRC walk through

LE – Liaison Engineer, D. Phillips
PDGL – Power Distr. GL, P.K. Feng
SE – Safety Engineer, P. Cirnigliaro
ISTS - Instrument Systems Technical Supervisor, T. Curcio
LS – Laser Scientist, B. Sheehy
ERLS – ERL Scientist, W. Xu
ERLPL- ERL Project Leader, D. Kayran

I allow Stage 1 ERL Low Power Gun Testing to begin:

_____

Signature: Associate Chair for Accelerator R&D

C-AD

Radiation

Safety Minutes of Radiation Safety Committee of August 10, 2006

Committee

Issued: August 21, 2006

Subject: ERL Critical Devices, Klystron Room, and Fault Protection

Present: D. Beavis, A. Etkin, P. Bergh, I. Ben-Zvi, K. Yip, I.-H. Chiang, R. Karol, L. Ahrens, N. Kling, D. Phillips, B. Oerter, P. Cameron, B. van Kuik, A. Zaltsman, and V.Litvinenko

Klystron Room Access Protection and Shielding

The Klystron room shielding was based on the operation of a similar Klystron at Los Alamos, which had a 1/8 inch lead "garage" over it. For the energy range of the x-rays the 1/8 inch of lead is equivalent to 2 inches of steel or less. The Klystron room is a steel box with a wall thickness of 2 inches of steel. There are penetrations in the back wall for utilities and the wave guide. These penetrations will be shadowed by steel of lead to prevent x-rays from directly shining out of the penetrations.

(CK-ERL-2006-485) Before operation of the Klystron the shielding prints need to be reviewed and signed. The review should examine the actual design for cracks and penetrations along with the any shadowing plates.

TLDs were attached to the Klystron during testing at the vendor (see attachment 1). Based on these results the committee recommends that the room does not require interlocks, but should have no access with the Klystron operating.

(CK-ERL-fy2006-486) A Kirk-key system will be used to control access to the room. The power to the klystron will be required to be off via the Kirk key for personnel to enter. The Kirk-key system is also an electrical safety requirement.

(CK-ERL-FY2006-487) The room will be posted as a high radiation area with beam on.

(CK-ERL-FY2006-488) Surveys will be conducted around the Klystron room before personnel are allowed near the steel enclosure. Attention should be given to any penetrations and cracks.

It is recommended that measurements inside and around the steel room be conducted to gain operational history on the radiation doses (probably will TLDs).

Critical Devices

The committee discussed the critical devices for ERL. A proposed list provided by J. Reich was considered (see attachment 2).

The potential radiation sources are the electron gun, the five-cell cavity, beam losses from the 3.5 MeV beam, and beam losses from the 25 MeV beam. The x-rays from the gun and five-cell cavity are expected to be more that 50 rads/hr at a meter. Therefore, dual interlocks and shutoff devices are required for all radiation sources.

(CK-ERL-FY2006-489) The Klystron will be turned off with two 4160V contactors. The internal contactor can be used as one of the critical devices provided that it is reviewed as suitable and the soft start does not defeat the protection provided by it. The low level RF (LLRF) was not considered as an option as a shutoff device due to the potential for oscillation in the system. The LLRF is will be used to shut the Klystron down quickly. The x-rays from the electron gun and the 3.5 MeV beam (and the 25 MeV beam) will be stopped by these critical devices.

(CK-ERL-FY2006-490) The existing 13.8 kV contactor will be used as a reachback for the 4160V contactors. The committee will reconsider this device as a reachback if an engineering review determines it is not suitable. Normally we do not reachback to 13.8 kV, but since this contactor was available from MPS operations in the past it was decided to utilize it.

(CK-ERL-FY2006-491) The critical devices for the five-cell cavity will be two 480V contactors. This will terminate the x-rays from the five-cell cavity (it will also prevent acceleration of the 3.5 MeV beam).

(CK-ERL-FY2006-492) The will be no reachback device for the two 480V contactors. The access control system will generate the local radiation emanate alarms if it detects a reachback condition and send alarms to the CAS and MCR.

The present approved scheme does not require the laser in the interlock system for radiation protection. It is not clear if the laser will have interlocks for access into the ERL area. The configuration has not been determined.

Interlock Testing

(CK-ERL-FY2006-493) It needs to be determined if the interlocks for ERL will require semi-annual or annual testing.

Beam Fault Protection

The committee was asked to provide guidelines on the acceptable fault levels that chipmunks could provide protection. The committee would like the design to have one

chipmunk detect faults up to 1 rem/hr. Two chipmunks must interlock for faults between 1 to 10 rem/hr.

The committee was asked to consider if other devices could be used to supplement the chipmunks for high fault levels. Attachment 3 provides a brief discussion of several schemes under consideration. Attachments 4 and 5 discuss the potential fault levels outside the shielding under various conditions. Shielding changes and shielding near the beam pipe are under consideration. If additional devices can be used to supplement the chipmunks the shielding design will be impacted.

P. Cameron made a presentation (see attachment 6) on detecting losses using beam current transformers in differential mode. The beam current transformers would have a null circuit and keep alive circuits. To compensate for thermal drifts, spurious magnetic fields, and gain/linearity the beam may need to be turned off every 1-5 minutes to renull. With this scheme beam losses approaching 0.1 microAmp could be detected. For a 50 mA 25 MeV beam a loss of 50 microAmps represents a factor of 50 below the 50 kW maximum beam loss limit. It was considered quite easy to detect this level of loss with the current transformers. Several members were uneasy with the idea of using the current transformers. Since time was up the meeting was adjourned. Discussion will continue in a meeting in 1-2 weeks on the current transformers and other options to limit beam losses.

Attachments (File copy Only):

1. E-mail, D. Beavis to RSC and attachments, August 8, 2006
2. E-mail, D. Beavis to RSC, August 8, 2006.
3. D. Beavis, “Comments for the RSC Meeting of August 10, 2006 on ERL”, August 8,2006
4. K. Yip, “ Radiation Estimates Related to the Energy Recovery Linac Facility (ERL)”, March 22, 2006
5. D. Beavis, “Simple Estimates for ERL Radiation”, August 1, 2006 and updated August 9, 2006.
6. P. Cameron, “Differential Current Measurement for Personnel Protection”, PowerPoint presentation, August 10, 2006.

CC:

RSC minutes file
RSC ERL file
RSC
Attendees

C-AD

Issued: January 23, 2007

Radiation

Safety Minutes of Radiation Safety Committee of January 18, 2007

Committee

Subject: Water Pipe over TtB and ERL Items

Present: D. Beavis, E.T. Lessard, C. Carlson, J. Mills, S. Guthrie, A. Raphael, R. Karol, A. Etkin, I.-H. Chiang, W. MacKay, P. Bergh, N. Kling, B. Van Kuik, J.W. Glenn, V. Litvinenko , and L. Ahrens

The committee reviewed two separate issues. The plan to install a domestic water pipe over the top of the TtB tunnel was reviewed. Two issues related to the ERL area design were discussed.

Water Pipe Over TtB

A domestic water pipe is planned to be routed over the top of the TtB tunnel. There is concern for the potential to activate the water in the pipe. Calculations on the expected activity concentrations were provided in two notes (see attachments 1 and 2).

The committee recommended that the pipe be allowed to go over the top of the TtB tunnel. It was recommended, based on ALARA principles, that a minimum of 3 feet of soil remain between the pipe and the tunnel instead of the initially planned 1-foot.

The committee reviewed the methods used to calculate the expected activity concentrations that could be expected in the water pipe for deuteron running. Deuterons beams produce the highest radiation levels of any of the beams that are transported in the Tandem to Booster (TtB) tunnel and therefore represent a worst case. The calculations appear to be conservative. With unrealistic water flow conditions the activity levels are typically 10^{-4} that of the drinking water standard (DWS). With realistic flow conditions most of the activity concentrations are 10^{-5} or lower relative to the DWS.

There was concern expressed about the possible perception of allowing any activity to be created in the water pipe no mater how small. It was noted that the addition of more soil between the pipe and the tunnel would not have a large impact of the cost of the project. Based on this the committee recommended that the design have 3 feet of dirt between the tunnel and the water pipe. Three feet of soil is the required minimum shielding thickness

of the TtB berm for deuterons. This would reduce the activity concentrations by a factor of 25 based on Figure 1. of attachment 1.

These numbers can be placed in perspective to other radiation doses. The average dose on Long Island due to cosmic rays is 24 mrem/yr (Radiological Worker 1 Training Study guide). The drinking water standard is based on 4 mrem/yr if all the water a person consumes comes from the activated water supply. Based on the activity concentrations it would be expected that a person drinking the water could receive 700,000,000 times smaller yearly dose than that from cosmic rays. Put another way, the dose from drinking the water for an entire year would be equivalent to the dose from cosmic rays for $1/10^{th}$ of a second. The committee decided that the potential activity was sufficiently small.

The pipe is a ductile iron pipe with a concrete liner. The question was raised if there was any issue about activity from the water pipe. The concentration of elements in the water includes any elements that were leached from the walls of the water pipe. The concrete has about a 10% fraction of Si. A 10^{-4} concentration of Si in the water could introduce about 10^{-3} pCi of Al-27 into the water with a 2 ft/s flow rate. Any leaching from the wall of the pipe is not expected to be an issue.

The nearest building where water could be extracted from the pipe is about 400 feet away. At a flow rate of 2 ft/s this requires 200 seconds for the water to travel to the nearest extraction point. Short-lived isotopes would have a large reduction in the concentration due to this transit time. The isotope with the highest concentration, N-16, has a half-life of 7.13 seconds. The concentration would be reduced by $4*10^{-9}$ for the transit time.

DOE does not list a drinking water limit for N-16. N-16 does have an air immersion limit of 3.*10**-9 micro-Ci/ml . A crude estimate of the a drinking water limit can be obtained by comparing the air immersion limit of N-16 to an element which has both an air immersion limit and drinking water limit. The air immersion limit for C-11 is 2.*10**-8 micro-Ci/ml and the DWS for C-11 is 400,000 pCi/L. Scaling by the air immersion limit a crude estimate of the drinking water limit for N-16 would be 60,000 pCi/L. The activity concentration was estimated to be 36 pCi/L of more than 1000 times lower. If the decay of the N-16 is taken into account due to the transit time to the nearest extraction point than the activity concentration of N-16 would be 10**-7 pCi/L. The committee did not consider the N-16 to be a concern.

The committee did not see a need to use configuration control on the potential locations of the loss points. It is noted that the calculations were conducted assuming the water pipe is at the peak of the neutron flux distribution relative to a local loss point. In reality the closest point is presently 12 meters away and a reduction of 100 is expected.

ERL Inner Shield Wall

The ERL facility has a four-foot thick light concrete wall. This wall does not provide sufficient shielding for the forward radiation from 25 MeV electron beam losses. Various

schemes have been tried in the past to supplement the outer wall. Attachment 3 discusses a scheme to shadow most of the outer wall by an inner wall of 2 feet of heavy concrete or steel. For a 50 kW beam loss the maximum dose rate outside the shielding is expected to be 15 rem/hr. Normal operations are expected to have values 1000 to 100,000 times lower.

The committee was asked to approve the general approach and not the specific details, which will be reviewed at a later meeting. The committee found the approach was reasonable and although the worst-case levels are higher than desired, the committee expects they are conservative and in reality will be lower. The area will have multiple chipmunks distributed around the facility, which should be able to detect beam faults and prevent exposure above the committee's or BNL's limits.

The machine protection devices are expected to typically turn off the beam when the beam losses are above 5-10 W. It is expected that losses of the scale 50 kW are not practical and the machine would be damaged at much smaller loss rates. The project is encouraged to provide a method and calculations that would support a smaller maximum sustainable beam loss rate.

The shield blocks are planned to be large blocks that require a crane to move. There is one location where space limitations may require lead to be used. It is requested that the inner shadow wall be constructed such that all components are captured in the present shielding removal procedure. Small shielding blocks such as pack blocks should be avoided so that configuration control is not an issue. **(Ck-ERL-FY2007-500).**

ERL 50 kW Wave Guide and Nearby Penetrations

The committee also discussed the penetrations planned for the 50 kW wave-guide, water pipes and cables that are adjacent to the support building. Attachment 4 discusses that assumptions and calculations that were done for these penetrations. The committee found the methods acceptable. A 50 kW beam loss is again assumed and the committee encourages the project to spend the effort to justify a smaller more realistic number.

The support building has predicted maximum levels of 500 mrem/hr from the penetrations. A chipmunk should be sufficient to prevent such faults. The highest estimate dose rate is 28 rem/hr outside the shielding directly outside of the wave-guide penetration. This location is 12 feet above the floor level and is in area that can be fenced off if needed. The 50 kW beam loss is very conservative. Fault studies will need to be conducted to determine the final configuration of this area outside of the penetrations. **(CK-ERL-Fy2007-501)**

The committee requests that the project provides an updated scenario for operations and personnel occupancies by area so that integrated exposure to personnel can be estimated. **(CK-erl-Fy2007-502)**

Attachments (file copy only)

1) D. Beavis, " Estimate of Radioactive Concentrations in a Water Pipe over TtB", Jan. 9, 2007.
2) D. Beavis, " Water Flow and Activity Concentrations in the Water Pipe Over TtB", Jan. 17, 2007.
3) D. Beavis, " The Effectiveness of a Two-Foot Thick Inner Concrete Wall", Dec. 11, 2007.
4) D. Beavis," Estimate of the Radiation Exiting Penetrations for the ERL 50 kW Wave Guide, Cable Buss Block, and Water Pipes", Dec. 6, 2007.

CC:

Present
RSC
RSC Minutes file
RSC tandem file
RSC ERL file

Collider-Accelerator Department

BROOKHAVEN NATIONAL LABORATORY

Building 911B – P.O. Box 5000
Upton, NY 11973-5000
Phone 631 344 7124
Fax 631 344 5568
beavis@bnl.gov
www.bnl.gov

managed by Brookhaven Science Associates
for the U.S. Department of Energy

Memo

date: *April 11, 2012*

to: *RSC*

from: *D. Beavis*

subject: *ERL Beam Dump Review*

The review of the design of the ERL beam dump and shield has been an open RSC checklist item[1] for ERL. The shield has been submitted for review. Several people have examined aspects of the electron beam dump. The beam dump is designed for 1MW of electrons at 3.5 MeV. This is the maximum beam energy for the electron gun. The ASE for ERL is written for 3.5 MeV and 1.5 MW although the beam dump is not expected to have more than 1 MW of beam.

External Dose Rates from the Beam Dump

The dose rates in areas adjacent to the ERL shielding have been estimated. Kin Yip[2] used MCNPX to estimate the dose rate at the east entrance gate and near 90 degrees at the closest location a person can stand. The dose rate near the power supply house was estimated to be $7.5*10^{-2}$ mrem/hr for 1 MW. The dose rate at the gate is 100 times lower. Analytic approximations were used[3] to estimate the dose rate near the concrete wall inside the power supply room at 1 mrem/hr. The dose rates in the isle way near the power supply building were estimated[4] to be 0.7 mrem/hr for 1MW.

The steel shield on the side of the beam dump is 6.1 inches thick, 3 inches on top, 4 inches at the back, and 6.1 inches on the bottom. In the forward direction a two-foot free standing block of steel is used to shadow the entrance door from the beam line and the beam dump. The beam dump in the ERL layout is shown below. In addition, various views of the beam dump and the removable shield are shown in a series of views.

The four-foot thick concrete roof is an area that is not allowed to be occupied during ERL operations. The dose rates on the roof over the beam dump will be about a factor of 20 higher than out the side wall due to the thinner steel shield and the smaller distance. This should not create any issues. The beam dump is downstream of the ODH vent, which is a weak portion of the roof shielding[5]. The photons must penetrate two feet of concrete to enter the port and require at least two scatters to exit the port. Scaling the G5 beam dump results, using the TVL for light concrete, and two scatters for the photons an estimate of less than 1 mrem/hr is expected out the ODH port.

The 50 kW waveguide is another close large penetration in the shielding. The expected dose exiting the port is estimated to be 6mrem/hr. There is a shadow block after the port[6] to further reduce the radiation exiting the port. The dose to occupied areas is expected to be satisfactory.

Most other penetrations are smaller and farther away and not expected to be an issue to the beam dump shield design. The beam dump will be a substantial source of x-rays inside the shielding for routine operations. This is a departure from the initial design philosophy[5] to make the dump no larger than expected routine losses. However, this design change does not create a dose issue for personnel outside the shielding and makes the dump shield design more economical. Initial surveys of the ERL facility will verify the design of the shielding and the penetrations.

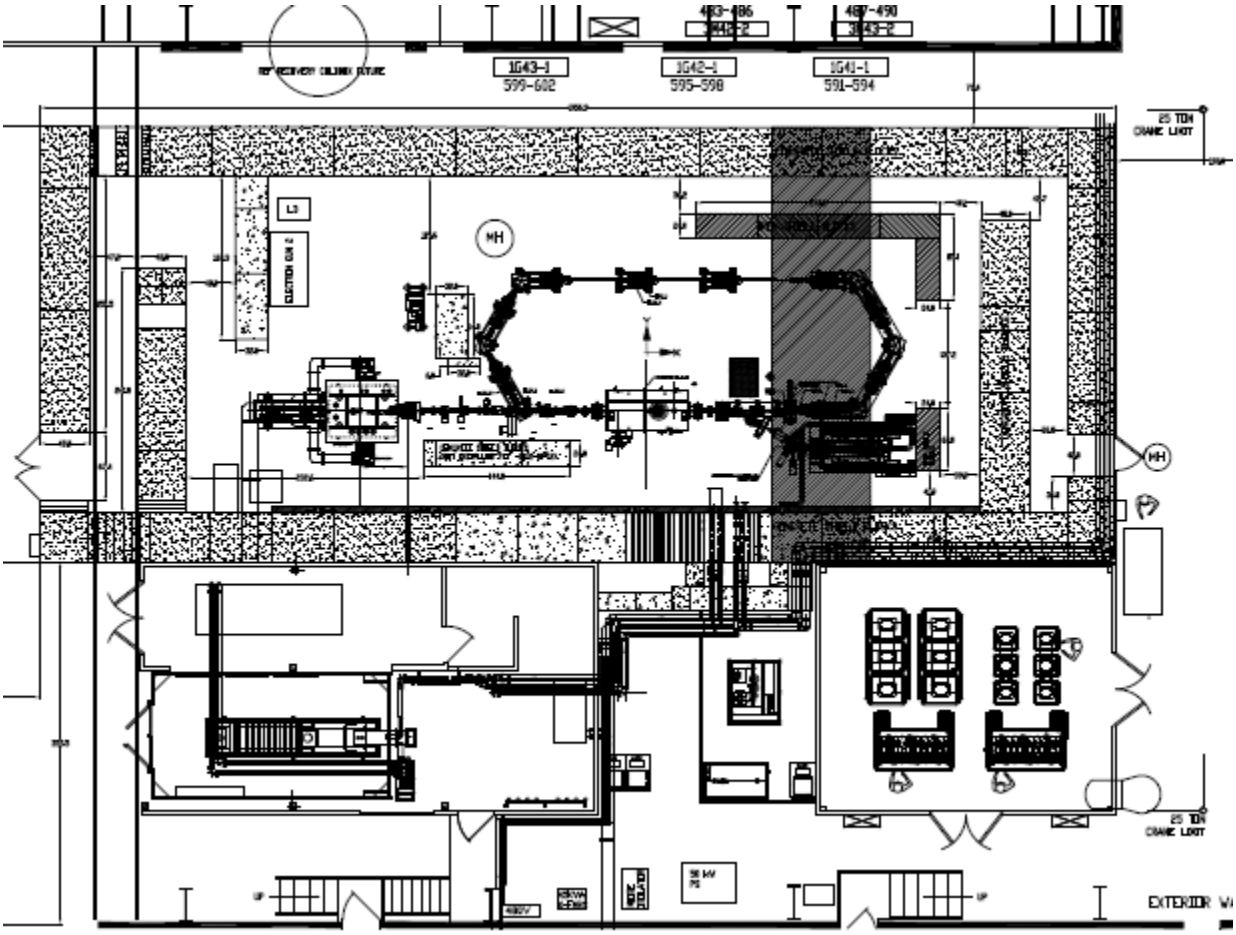

Layout showing the beam dump and surrounding facilities.

Ozone Production in Air near the Beam Dump

The production of ozone in the air surrounding the beam dump was estimated[2] to be 1.6 PPM per hour with no shielding. At that time the beam dump shield was estimated to be 0.25 meter thick and the ozone production would have been reduced by about 10^{-4}. The shield has been designed

to be about 6 inches thick on the sides and 3 inches on top. A distance of 10 meters was used for the estimation of the concentration, which may be too large a value. The concentration will depend of air circulation, incidental venting, etc. The air quality will be sampled for the first few operations to provide an empirical measure of the ozone production and concentration. **(Ck-FY2012-ERL-804)**

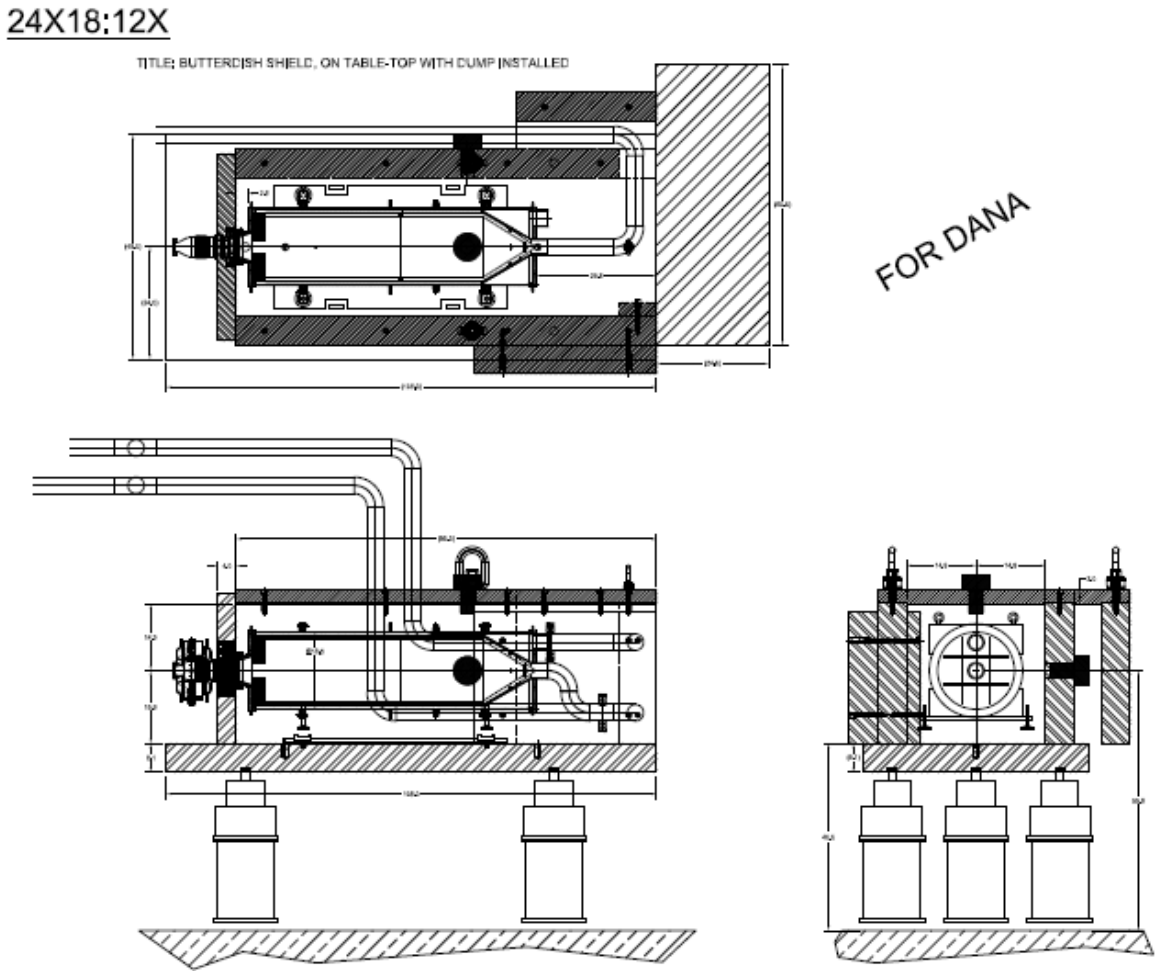

Various views of the beam dump and shield. The shield has counter weights for rigging.

Hydrogen Generation in the Cooling Water

The electron beam will deposit energy in the cooling water. Hydrogen can be generated in the water and has been examined by K. Yip[7] using MCNPX and I. Ben-Zvi[2] using analytic techniques. Their results were 4.8 liters/hr (K. Yip) and 5.6 liters/hr (I. Ben-Zvi). There are no expected radioactive products in the cooling water since the beam energy is below most thresholds. Therefore, the plan is to vent the gases from the cooling water to a safe location outside. At higher beam energies the radioactive products can make venting the gases an issue. The venting method and area must be reviewed by the safety section before beam is put into the dump. **(Ck-FY2012-ERL-805)**

References

1. RSC Minutes of May 27, 2004; http://www.c-ad.bnl.gov/esfd/RSC/Minutes/05-27-04%20minutes.pdf
2. Kin Yip memorandum of Feb. 27, 2012; http://www.c-ad.bnl.gov/esfd/RSC/Memos/kin_dump.pdf
3. I. Ben-Zvi, C-AD AP note, March 2012.
4. D. Beavis memorandum of Jan. 12, 2012; http://www.c-ad.bnl.gov/esfd/RSC/Memos/rsc%20memos/main%20pages/rsc_memos.htm
5. D. Beavis Memorandum of March 28, 2008; http://www.c-ad.bnl.gov/esfd/RSC/Memos/ERL-Penetrations3.pdf
6. D. Beavis Memorandum of Dec. 6, 2006; http://www.c-ad.bnl.gov/esfd/RSC/Memos/holes_1_040912.pdf
7. Kin Yip memorandum of Feb. 15, 2012; http://www.c-ad.bnl.gov/esfd/RSC/Memos/kin_dump_water.pdf

CC

D. Phillips
S. Belomestnykh
J. Tuozzolo
I. Ben-Zvi

Collider-Accelerator Department

BROOKHAVEN NATIONAL LABORATORY

Building 911B – P.O. Box 5000
Upton, NY 11973-5000
Phone 631 344 7124
Fax 631 344 5568
beavis@bnl.gov
www.bnl.gov

managed by Brookhaven Science Associates
for the U.S. Department of Energy

Memo

date: *April 11, 2012, (UPDATED-April 25, 2012)*

to: *RSC*

from: *D. Beavis*

subject: *ERL Beam Dump Review*

The review of the design of the ERL beam dump and shield has been an open RSC checklist item[1] for ERL. The shield has been submitted for review. Several people have examined aspects of the electron beam dump. The beam dump is designed for 1MW of electrons at 3.5 MeV. This is the maximum beam energy for the electron gun. The ASE for ERL is written for 3.5 MeV and 1.5 MW although the beam dump is not expected to have more than 1 MW of beam.

Although the text of this review is written for 1 MW the results can be scaled to 1.5 MW, which is the ASE limit. The conclusions are that there will be no radiological issues related to the beam dump at the ASE limit. This conclusion will be confirmed by radiological surveys and air sampling.

External Dose Rates from the Beam Dump

The dose rates in areas adjacent to the ERL shielding have been estimated. Kin Yip[2] used MCNPX to estimate the dose rate at the east entrance gate and near 90 degrees at the closest location a person can stand. The dose rate near the power supply house was estimated to be $7.5*10^{-2}$ mrem/hr for 1 MW. The dose rate at the gate is 100 times lower. Analytic approximations were used[3] to estimate the dose rate near the concrete wall inside the power supply room at 1 mrem/hr. The dose rates in the isle way near the power supply building were estimated[4] to be 0.7 mrem/hr for 1MW.

The steel shield on the side of the beam dump is 6.1 inches thick, 3 inches on top, 4 inches at the back, and 6.1 inches on the bottom. In the forward direction a two-foot free standing block of steel is used to shadow the entrance door from the beam line and the beam dump. The beam dump in the ERL layout is shown below. In addition, various views of the beam dump and the removable shield are shown in a series of views.

The four-foot thick concrete roof is an area that is not allowed to be occupied during ERL operations. The dose rates on the roof over the beam dump will be about a factor of 20 higher than out the side wall due to the thinner steel shield and the smaller distance. This should not create any issues. The beam dump is downstream of the ODH vent, which is a weak portion of the roof shielding[5]. The photons must penetrate two feet of concrete to enter the port and require at least two scatters to exit the port. Scaling the G5 beam dump results, using the TVL for light

concrete, and two scatters for the photons an estimate of less than 1 mrem/hr is expected out the ODH port.

The 50 kW waveguide is another close large penetration in the shielding. The expected dose exiting the port is estimated to be 6mrem/hr. There is a shadow block after the port[6] to further reduce the radiation exiting the port. The dose to occupied areas is expected to be satisfactory.

Most other penetrations are smaller and farther away and not expected to be an issue to the beam dump shield design. The beam dump will be a substantial source of x-rays inside the shielding for routine operations. This is a departure from the initial design philosophy[5] to make the dump no larger than expected routine losses. However, this design change does not create a dose issue for personnel outside the shielding and makes the dump shield design more economical. Initial surveys of the ERL facility will verify the design of the shielding and the penetrations.

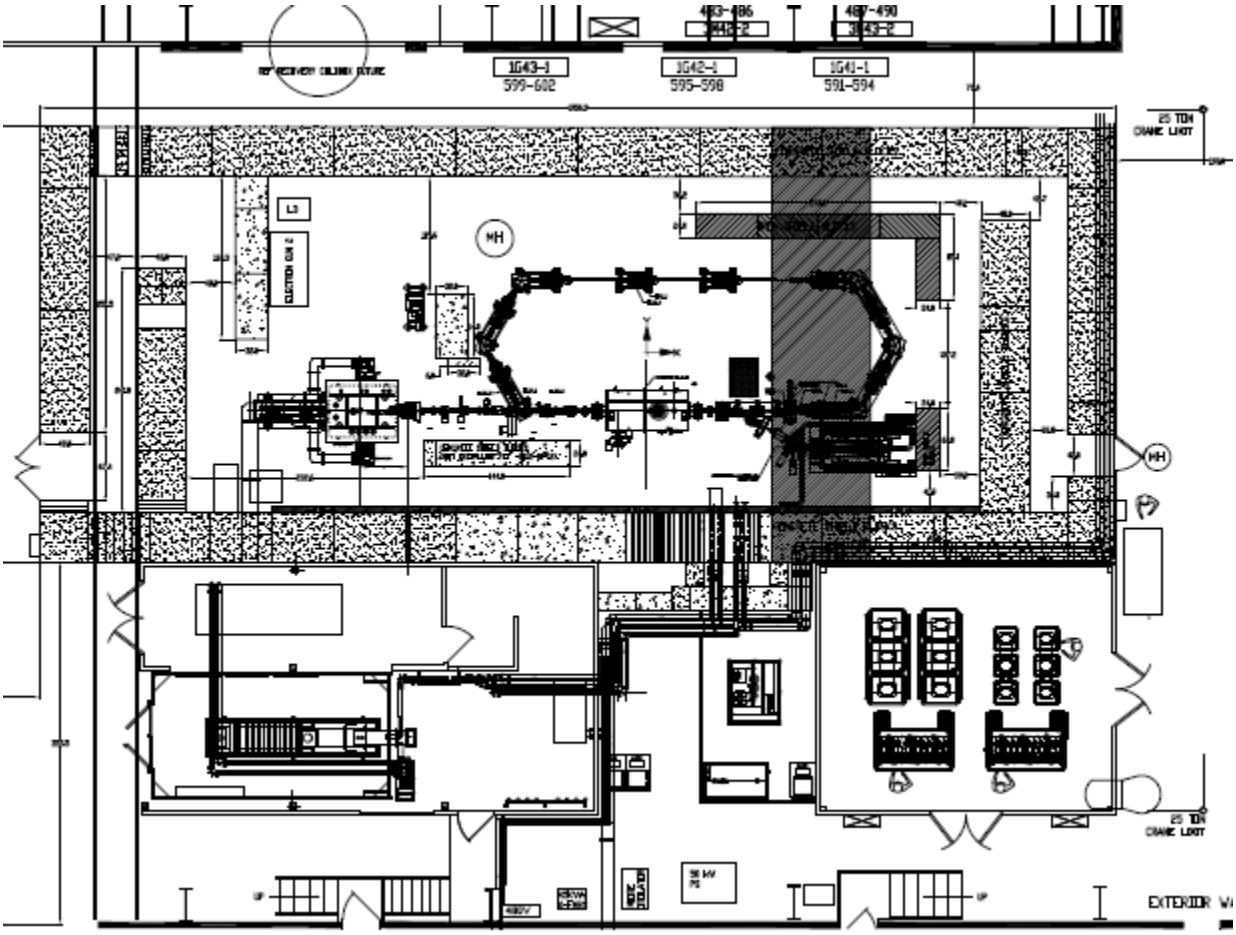

Layout showing the beam dump and surrounding facilities.

Ozone Production in Air near the Beam Dump

The production of ozone in the air surrounding the beam dump was estimated[2] to be 1.6 PPM per hour with no shielding. At that time the beam dump shield was estimated to be 0.25 meter thick and the ozone production would have been reduced by about 10^{-4}. The shield has been designed to be about 6 inches thick on the sides and 3 inches on top. A distance of 10 meters was used for the estimation of the concentration, which may be too large a value. The concentration will depend of air circulation, incidental venting, etc. The air quality will be sampled for the first few operations to provide an empirical measure of the ozone production and concentration. **(Ck-FY2012-ERL-804)**

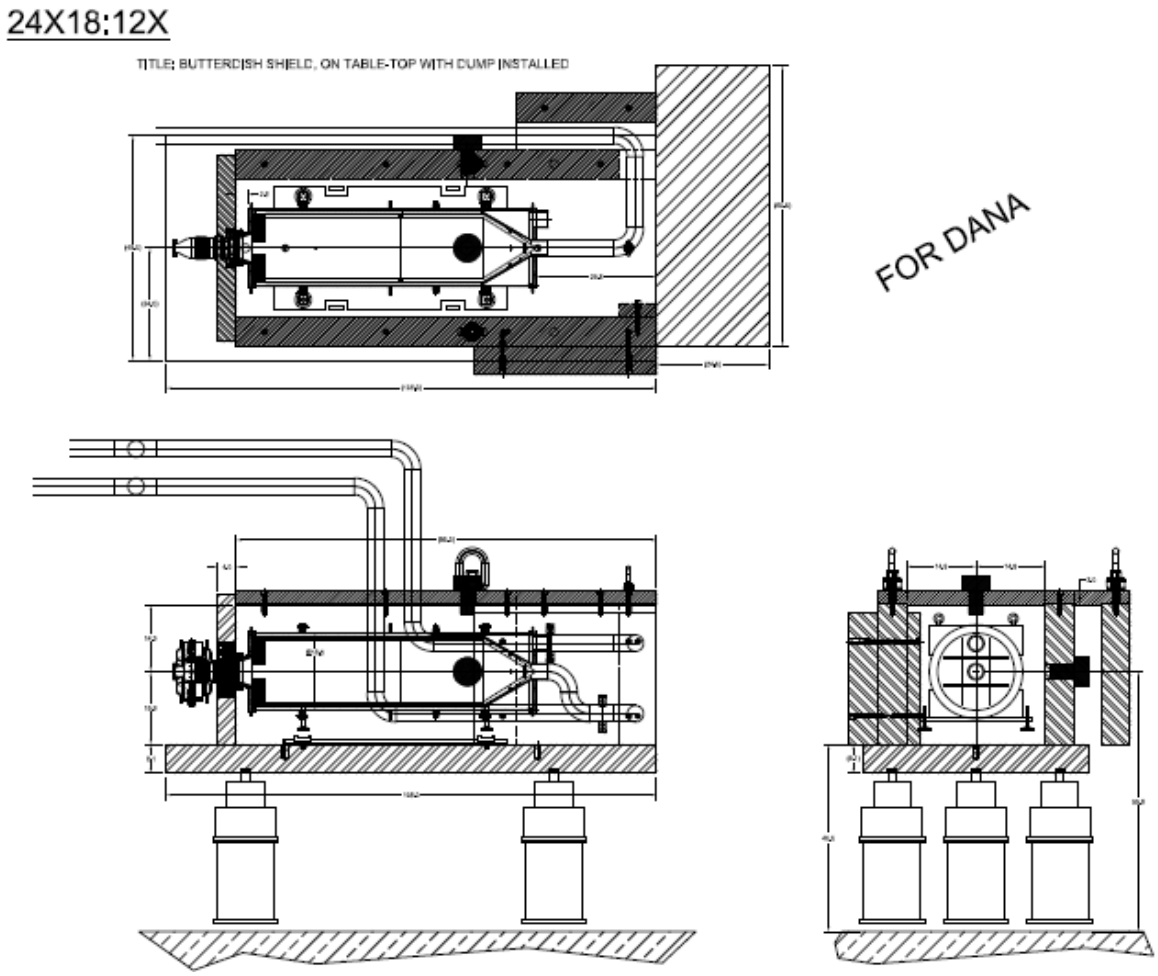

Various views of the beam dump and shield. The shield has counter weights for rigging.

Hydrogen Generation in the Cooling Water

The electron beam will deposit energy in the cooling water. Hydrogen can be generated in the water and has been examined by K. Yip[7] using MCNPX and I. Ben-Zvi[2] using analytic techniques. Their results were 4.8 liters/hr (K. Yip) and 5.6 liters/hr (I. Ben-Zvi). There are no expected radioactive products in the cooling water since the beam energy is below most thresholds. Therefore, the plan is to vent the gases from the cooling water to a safe location outside. At higher beam energies the radioactive products can make venting the gases an issue.

The venting method and area must be reviewed by the safety section before beam is put into the dump. **(Ck-FY2012-ERL-805)**

References

1. RSC Minutes of May 27, 2004; http://www.c-ad.bnl.gov/esfd/RSC/Minutes/05-27-04%20minutes.pdf
2. Kin Yip memorandum of Feb. 27, 2012; http://www.c-ad.bnl.gov/esfd/RSC/Memos/kin_dump.pdf
3. I. Ben-Zvi, C-AD AP note, March 2012.
4. D. Beavis memorandum of Jan. 12, 2012; http://www.c-ad.bnl.gov/esfd/RSC/Memos/rsc%20memos/main%20pages/rsc_memos.htm
5. D. Beavis Memorandum of March 28, 2008; http://www.c-ad.bnl.gov/esfd/RSC/Memos/ERL-Penetrations3.pdf
6. D. Beavis Memorandum of Dec. 6, 2006; http://www.c-ad.bnl.gov/esfd/RSC/Memos/holes_1_040912.pdf
7. Kin Yip memorandum of Feb. 15, 2012; http://www.c-ad.bnl.gov/esfd/RSC/Memos/kin_dump_water.pdf

CC

D. Phillips
S. Belomestnykh
J. Tuozzolo
I. Ben-Zvi

TITLE: BUTTERDISH SHIELD, BOLTED ASSEMBLY, W/ LIFTING RINGS

24X18: 8X

FOR DANA

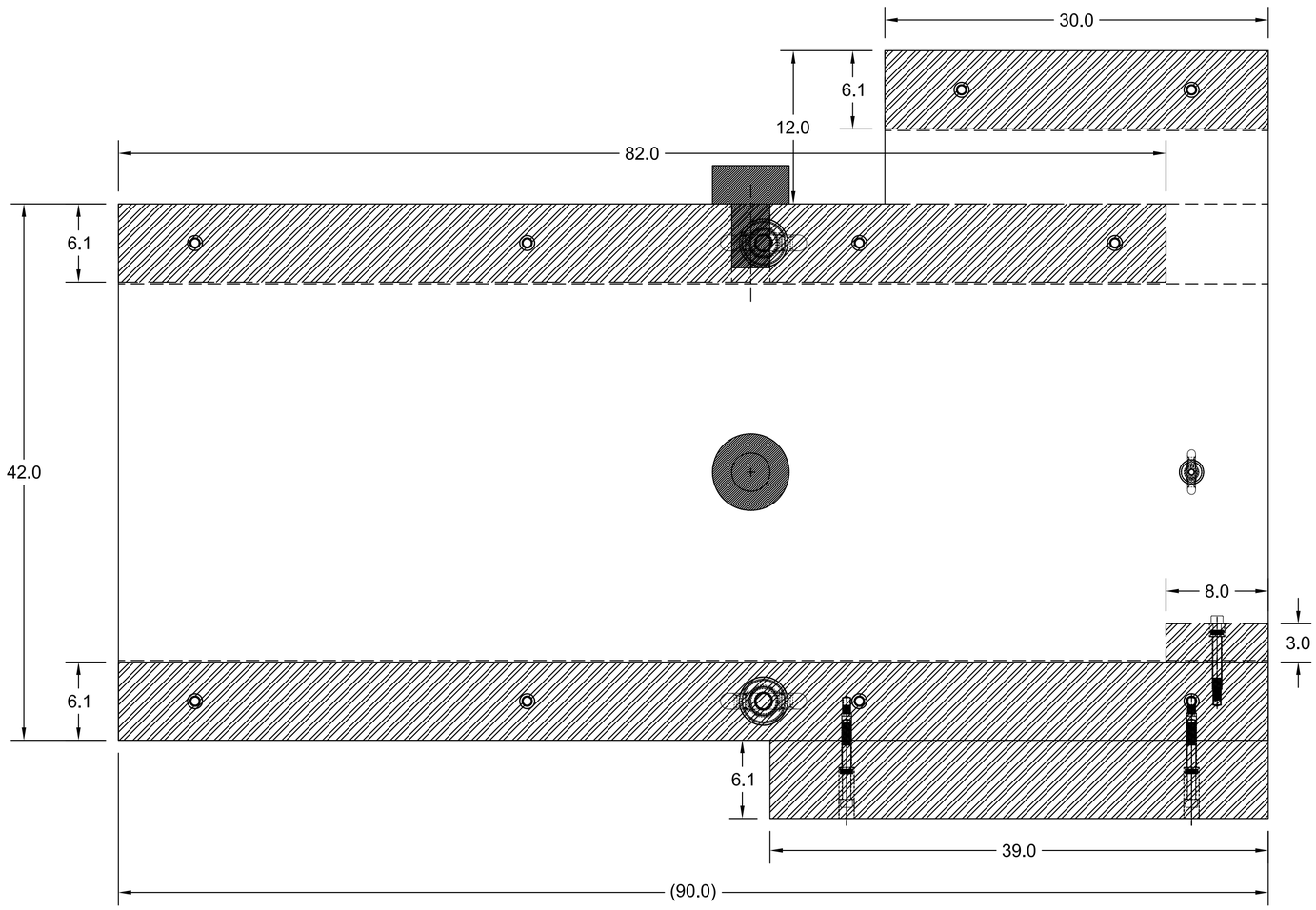

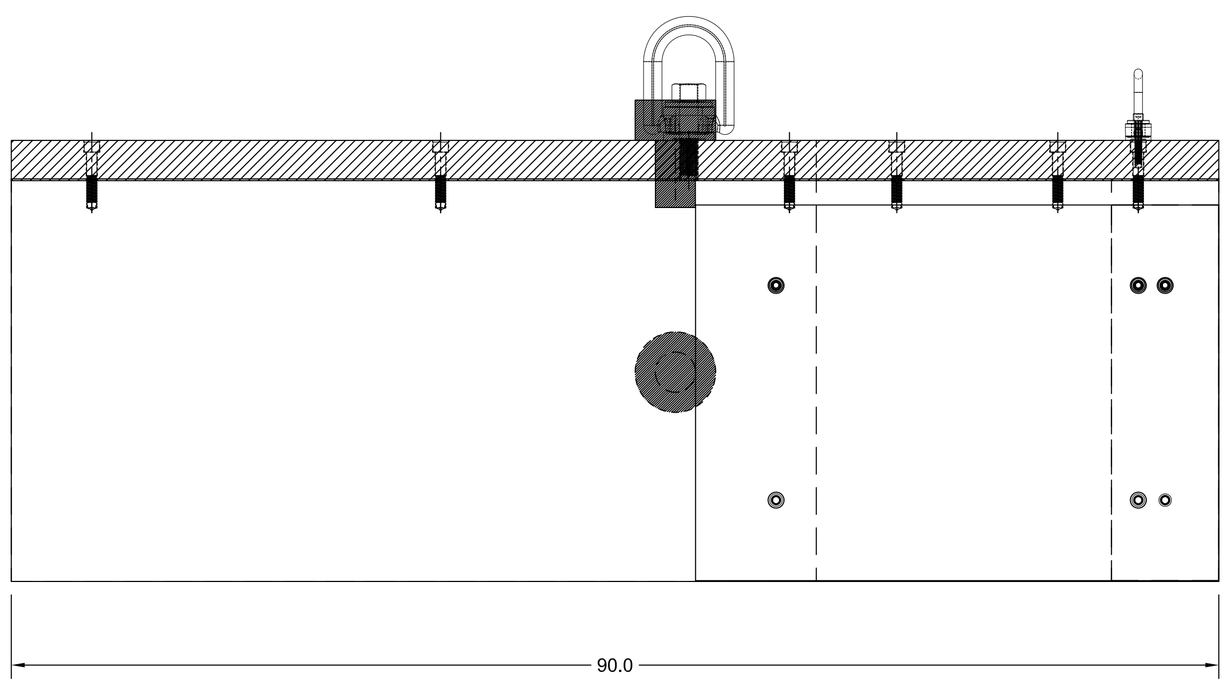

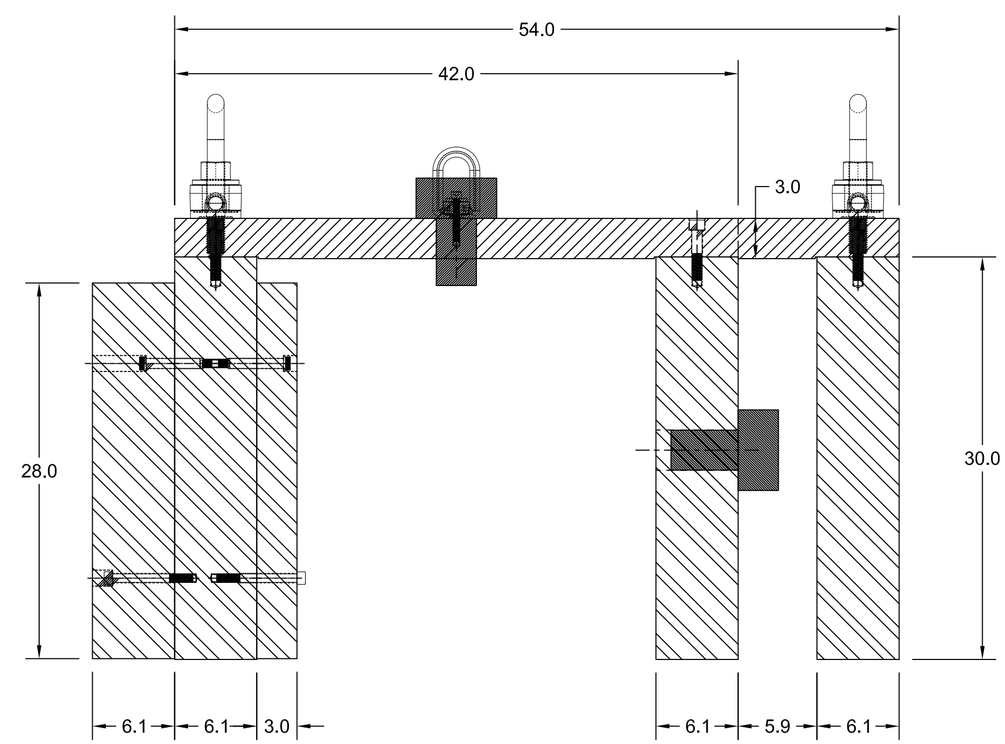

TITLE: BUTTERDISH SHIELD, ON TABLE-TOP

24X18: 8X

FOR DANA

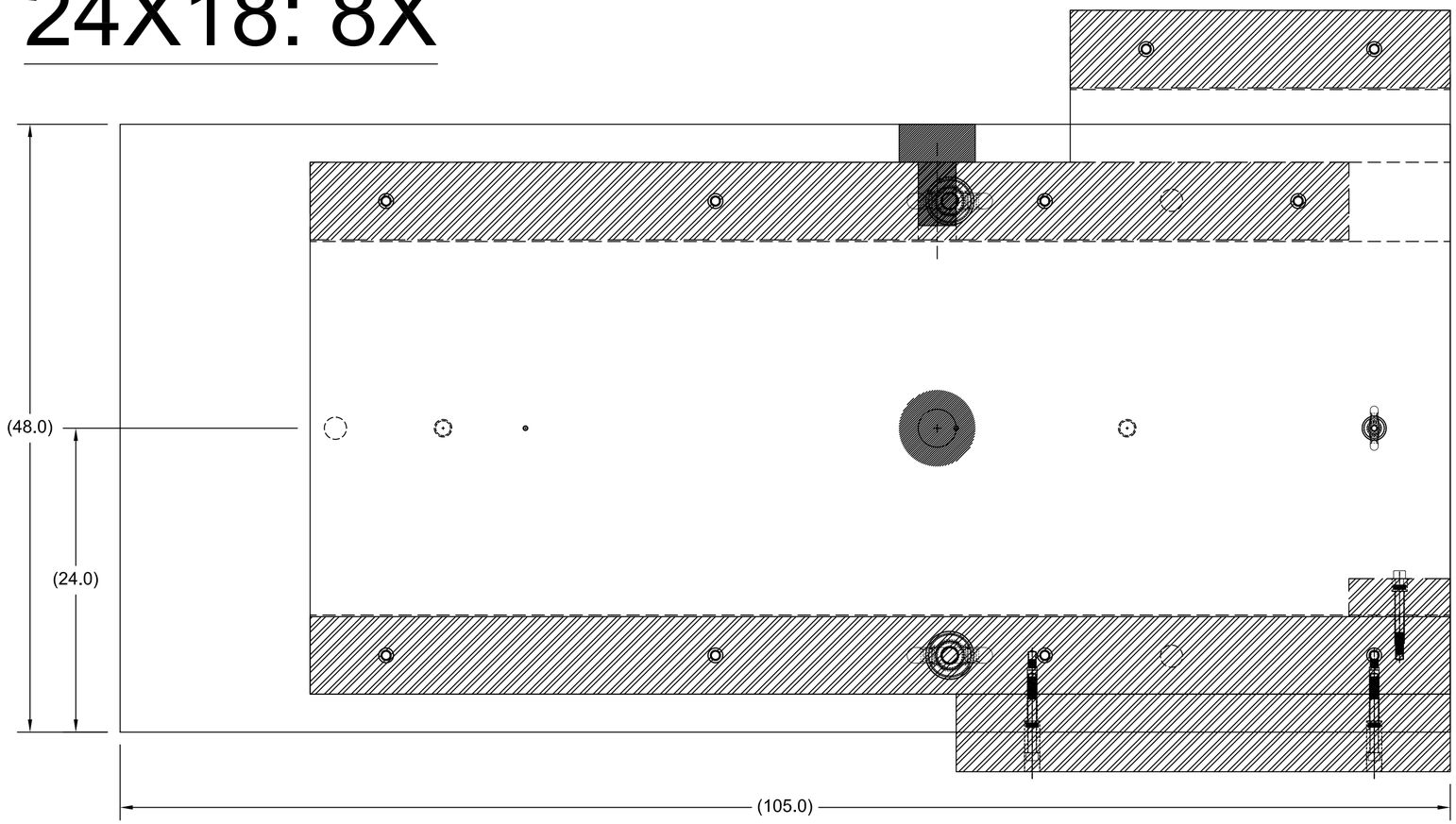

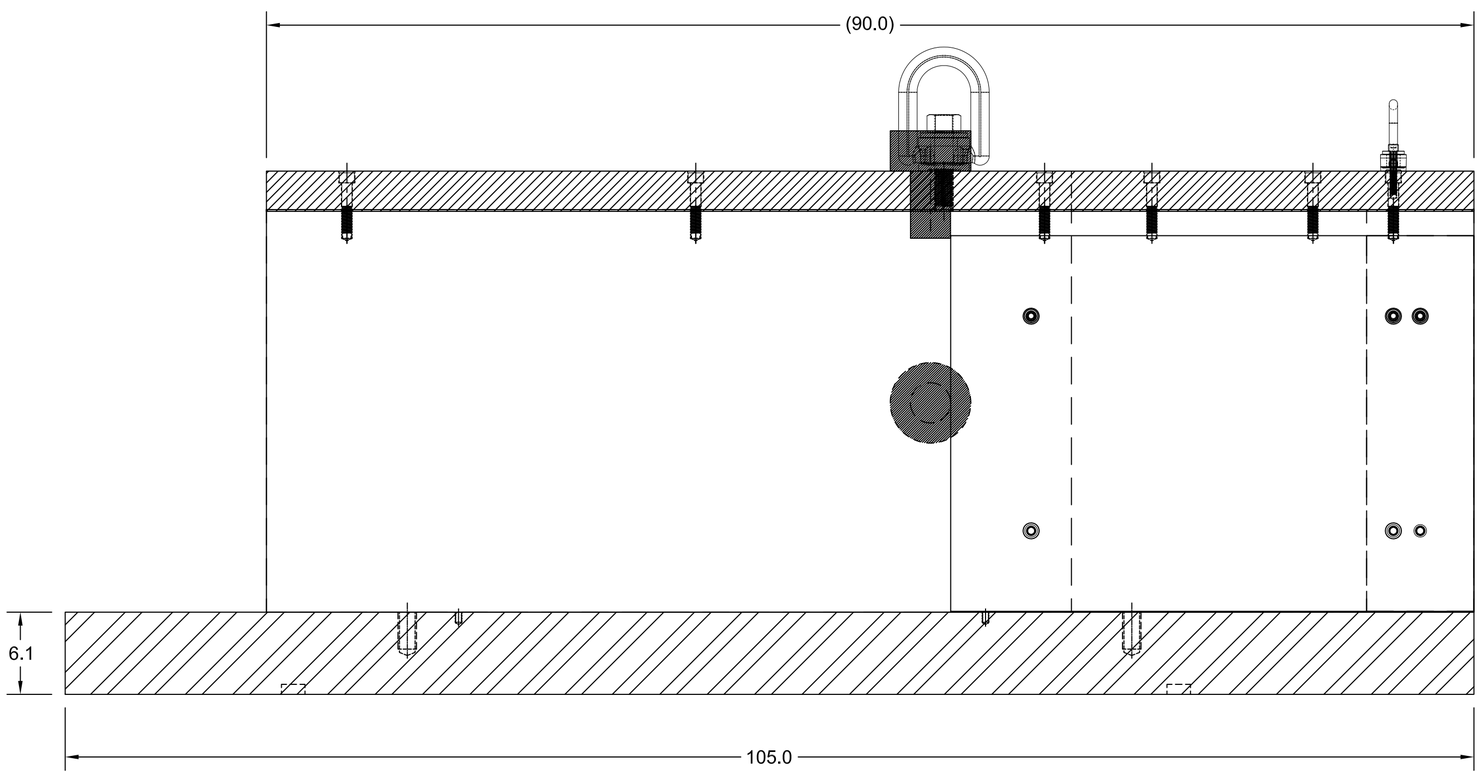

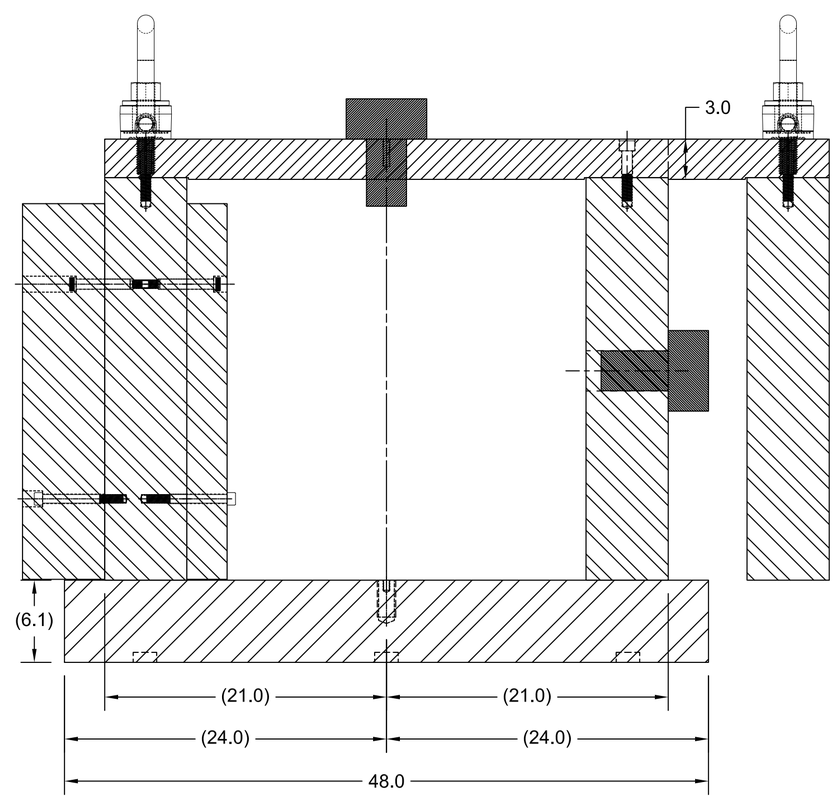

24X18:12X

TITLE: BUTTERDISH SHIELD, ON TABLE-TOP WITH DUMP INSTALLED

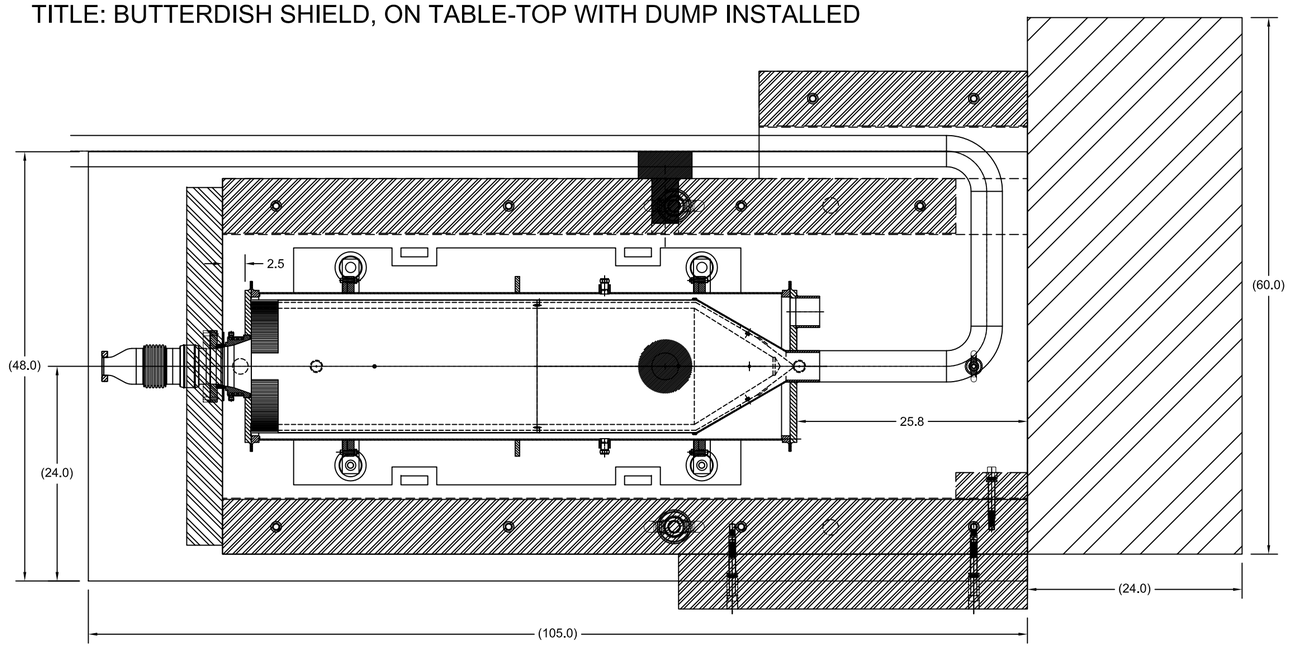

FOR DANA

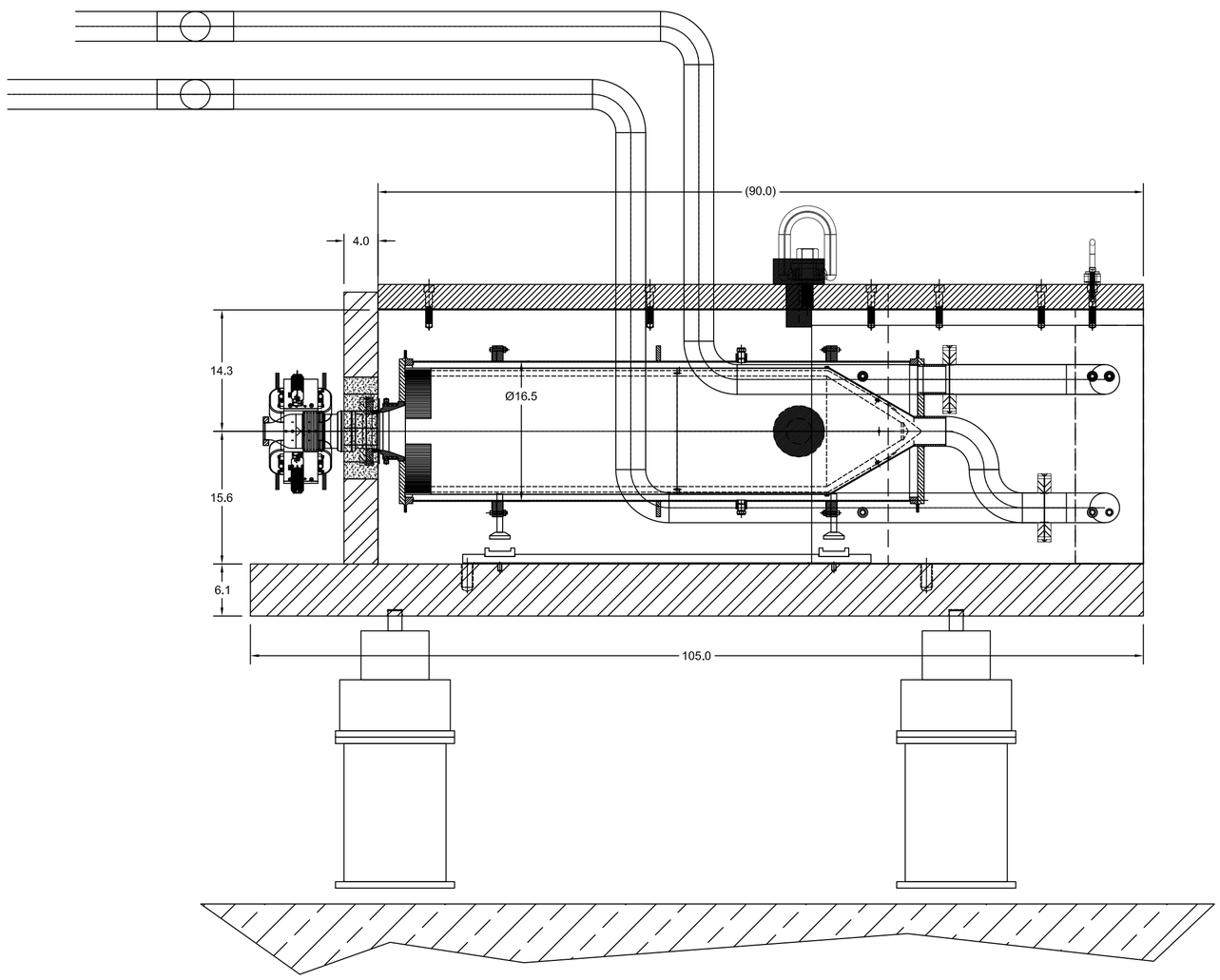

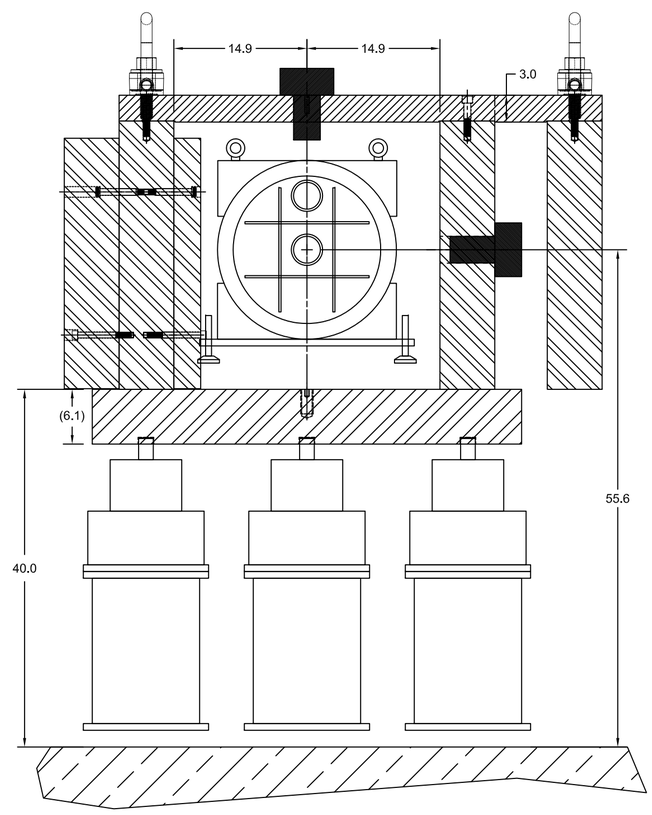

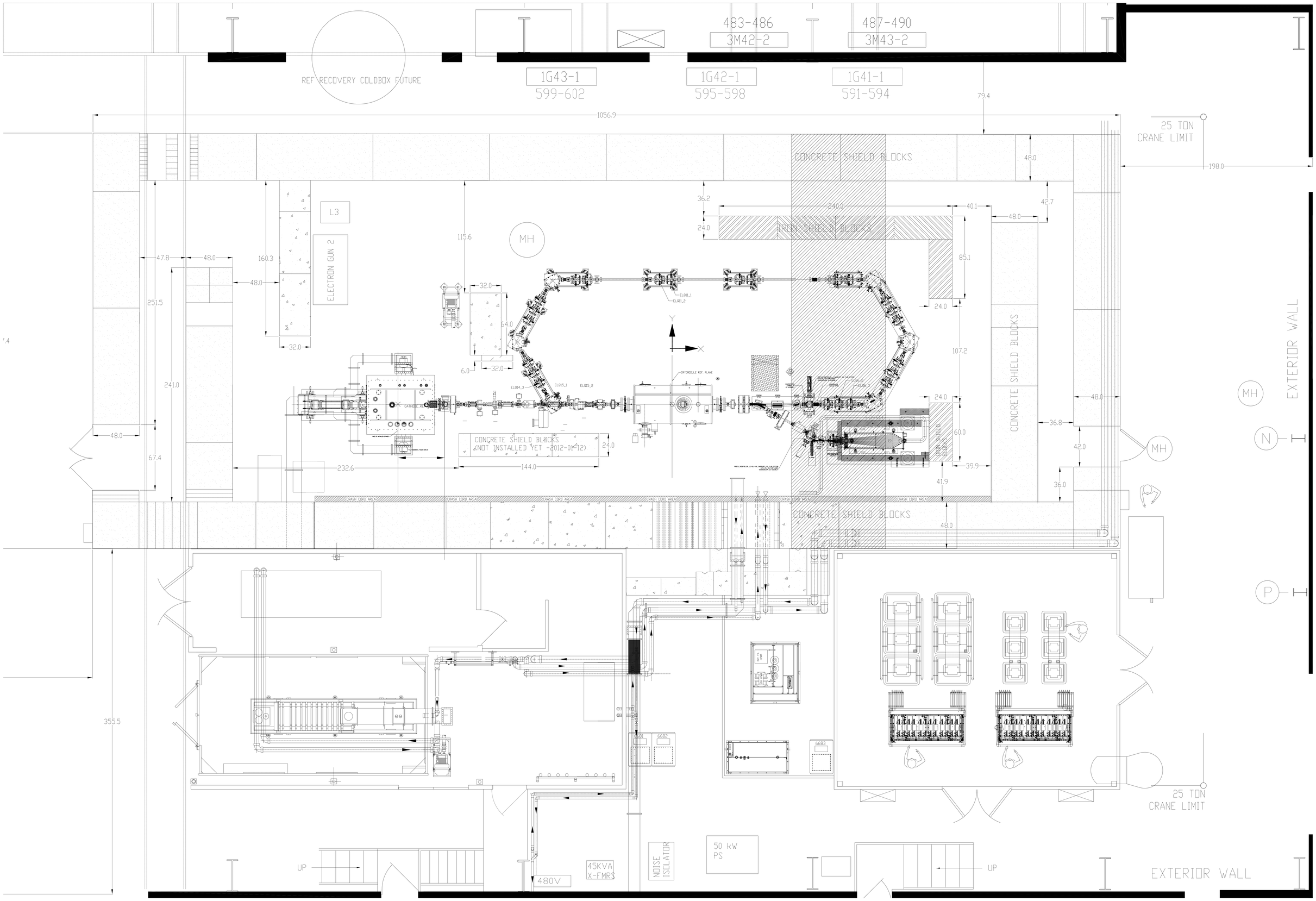
483-486
3M42-2
487-490
3M43-2
REF RECOVERY COLDBOX FUTURE
1G43-1
599-602
1G42-1
595-598
1G41-1
591-594
79.4
1056.9
25 TON
CRANE LIMIT
198.0
CONCRETE SHIELD BLOCKS
48.0
36.2
240.0
40.1
42.7
24.0
IRON SHIELD BLOCKS
85.1
L3
ELECTRON GUN 2
160.3
115.6
MH
47.8
251.5
241.0
67.4
32.0
64.0
6.0
107.2
60.0
36.8
42.0
36.0
39.9
41.9
232.6
144.0
CONCRETE SHIELD BLOCKS
(NOT INSTALLED YET -2012-01-12)
CRYOMODULE REF. PLANE
CATHODE REF
EXTERIOR WALL
N
P
CRASH CORD AREA
355.5
6681
6682
6683
UP
480V
45KVA
X-FMRS
NOISE
ISOLATOR
50 kW
PS

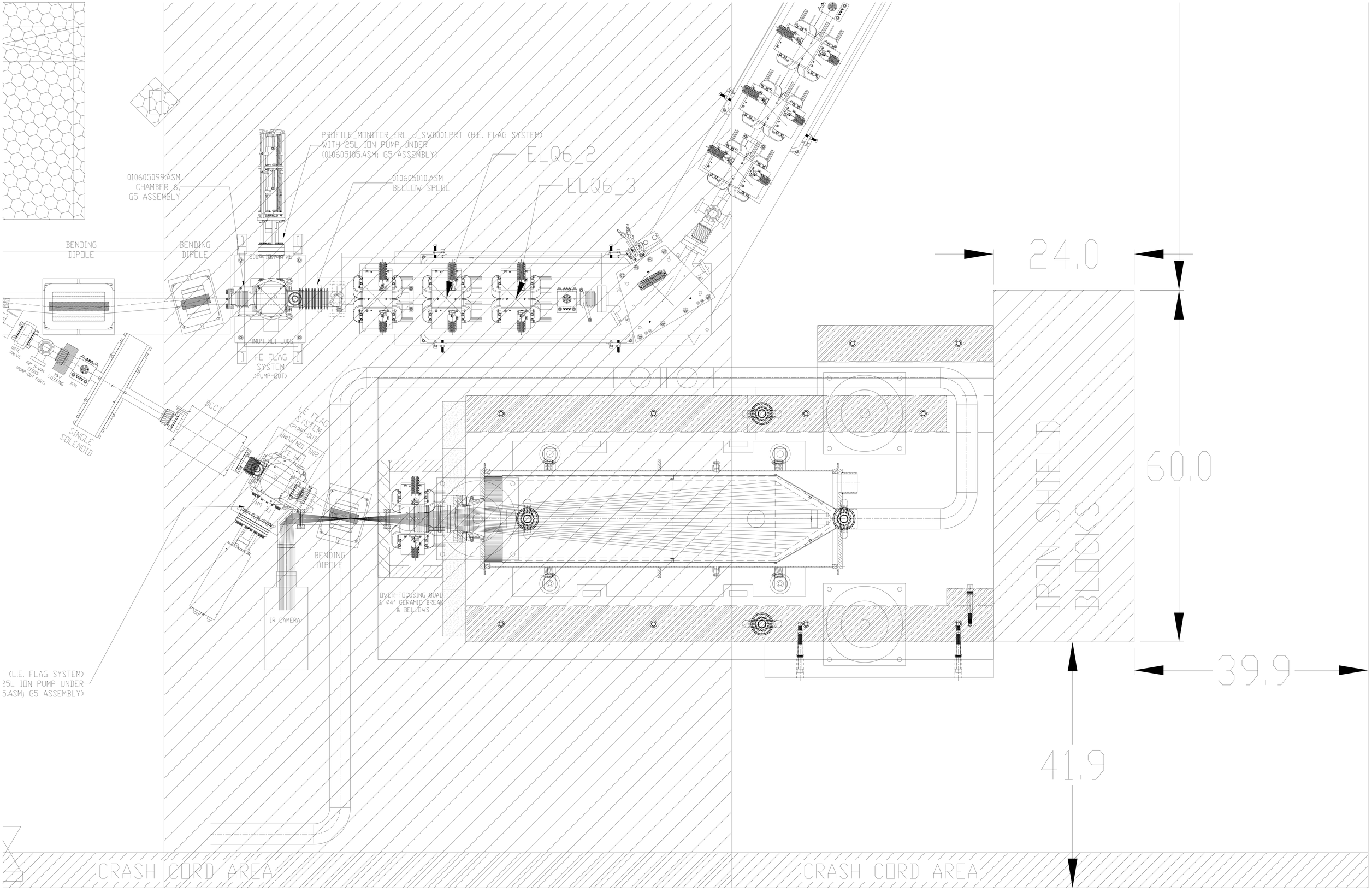
PROFILE_MONITOR_ERL_J_SW0001.PRT (H.E. FLAG SYSTEM)
WITH 25L ION PUMP UNDER
(010605105.ASM; G5 ASSEMBLY)
ELQ6_2
ELQ6_3
010605099.ASM
CHAMBER 8,
G5 ASSEMBLY
010605010.ASM
BELLOW SPOOL
BENDING
DIPOLE
BENDING
DIPOLE
GATE
VALVE
90° 5-WAY
CROSS
(PUMP-OUT PORT)
HR
STEERING
BPM
SINGLE
SOLENOID
ØCCT
H.E. FLAG
SYSTEM
(PUMP-OUT)
200L ION PUMP
H.E. FLAG
SYSTEM
(PUMP-OUT)
200L ION PUMP
BENDING
DIPOLE
IR CAMERA
OVER-FOCUSING QUAD
& Ø4" CERAMIC BREAK
& BELLOWS
IRON SHIELD
BLOCKS
24.0
60.0
39.9
41.9
(L.E. FLAG SYSTEM)
25L ION PUMP UNDER
5.ASM; G5 ASSEMBLY)
CRASH CORD AREA
CRASH CORD AREA

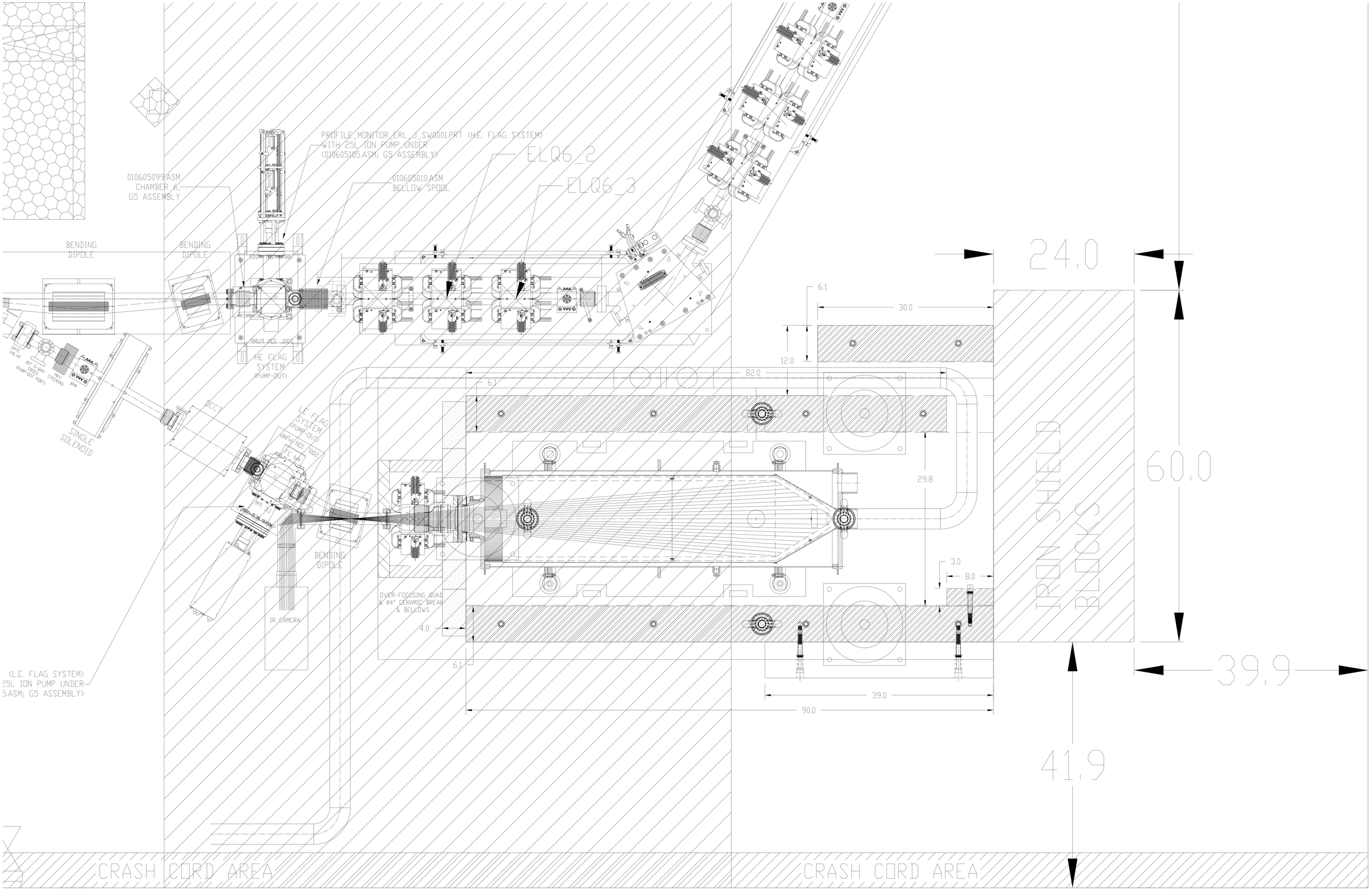
PROFILE_MONITOR_ERL_J_SW0001.PRT (H.E. FLAG SYSTEM)
WITH 25L ION PUMP UNDER
(010605105.ASM; G5 ASSEMBLY)
ELQ6_2
ELQ6_3
010605099.ASM
CHAMBER 8,
G5 ASSEMBLY
010605010.ASM
BELLOW SPOOL
BENDING
DIPOLE
BENDING
DIPOLE
GATE
VALVE
90° 5-WAY
CROSS
(PUMP-OUT PORT)
HE
STEERING
BPM
SINGLE
SOLENOID
ØCCT
H.E. FLAG
SYSTEM
(PUMP-OUT)
200L ION PUMP
H.E. FLAG
SYSTEM
(PUMP-OUT)
200L ION PUMP
BENDING
DIPOLE
IR CAMERA
OVER-FOCUSING QUAD
& Ø4" CERAMIC BREAK
& BELLOWS
(L.E. FLAG SYSTEM)
25L ION PUMP UNDER
5.ASM; G5 ASSEMBLY)
24.0
6.1
30.0
12.0
82.0
6.1
29.8
3.0
8.0
4.0
6.1
39.0
90.0
60.0
39.9
41.9
IRON SHIELD
BLOCKS
CRASH CORD AREA
CRASH CORD AREA

Prepared by: S. Belomestnykh

Date: August 17, 2012

Reviewed by: _____

Date: 10/8/12

Approved by: _____

T. Roser

Date: 10/8/12

ERL RSC Check-Off List for Cold Emission Testing of the ERL SRF electron gun

Completion of this ERL RSC Check-Off List is a prerequisite for cold emission testing.

Upon completion of this check-off list in the MCR, the ERL cold emission testing (CET) of the SRF electron gun may commence.

1. _____ **(LP)** **RSC LOTO has been applied to prevent the 1 MW klystron from being energized. This or equivalent must remain in place until the check-off list is complete.**

2. _____ (IG) Chipmunk operation verified.

3. _____ (RSCC) The shielding has been examined and found acceptable for SRF cavity tests.

4. _____ (LE) ERL block house shielding and barriers inspected and acceptable for CET.

5. _____ (LE) The barriers are in place at both ends of the trench and posted.

6. _____ (LE) The ladder at the power supply house has a locked barrier and is posted.

7. _____ (RCD) Post area between West wall of the ERL and building wall as access prohibited without a RCT.

8. _____ (ACG) Chipmunks required for CET have interlock function checked. (See attached list).

9. _____ (ACG) PASS test is complete for ERL.

10. _____ (LE) Waveguide is in place for 1 MW klystron and is connected to the SRF gun.

11. _____ (RCD) Entrance gates to the ERL block house posted.

12. _____ (RCD) Areas around the entrance gates roped off and posted not to enter without HP for the cavity tests.

13. _____ (RCD) The support building against ERL shielding is posted as no entry without a RCT during the cavity tests.

14. _____ (LE) Area surrounding ERL is posted as no ladders/no climbing.

15. _____ (ACG) All bypasses or temporary jumpers in place have been discussed with RSCC.

16. _____(ACG) ODH interlocks certified.

17. _____(RGDC) Gun registered as an RGD.

18. _____ (LP) The items listed above have been completed.

19. _____ (OC) List completion verified by on-duty operations coordinator.

When the list above is complete then cold emission testing of the ERL SRF electron gun may begin.

When the SRF gun is ready to potentially generate X-rays, the on-duty RCT needs to be in the area to conduct surveys of the shielding and penetration. After the surveys have been reviewed, the configuration of the area posting near the ERL block house will be determined.

RCD	Radiological Control Division: P. Bergh or designee
LE	Liaison Engineer: D. Phillips or designee
LP	Liaison Physicist: S. Belomestnykh or designee
MCRGL	MCR Group Leader: P. Ingrassia or designee
RSCC	Radiation Safety Committee Chairperson: D. Beavis or designee
OC	Operations Coordinator
ACG	Access Control Group: J. Reich or designee
RCT	Radiation Control Technician
IG	Instrumentation Group: M. Minty or designee
CEE	Chief Electrical Engineer: J. Sandberg or designee
RGDC	C-AD RGD Custodian: A. Etkin or designee

CHIPMUNKS			
Name	Location	Interlock [mrem/hr]	Alarm [mrem/hr]
NMO170	North Labyrinth	50	40
NMO171	North Gate	50	40
NMO172	1 MW Waveguide port	50	40
NMO173	50 kW Waveguide area	50	40
NMO174	West cryo pipe exit	50	40
NMO175	South Gate	50	40
NMO176	South Labyrinth	50	40
NMO177	Internal to ERL 1	-	-
NMO177	Internal to ERL 2	-	-

Collider-Accelerator Department

BROOKHAVEN NATIONAL LABORATORY

Building 911B – P.O. Box 5000
Upton, NY 11973-5000
Phone 631 344 4116
Fax 631 344 5954
kinyip@bnl.gov
www.bnl.gov

managed by Brookhaven Science Associates
for the U.S. Department of Energy

Memo

date: *October 1, 2012*

to: *RSC, D. Beavis*

from: *K. Yip*

subject: *Radiation due to 3.5 MeV electron beam*

This document is written to report on the radiation dose due to the possibility of electron beam in the Energy Recovery LINAC (ERL) facility hitting concrete wall. The tool used here is the simulation software "MCNPX" with the newest available version 2.7.0 at the time of this work.

1. Simulation Setup

The maximum kinetic energy of the electron beam considered here is 3.5 MeV (even though it may be higher than what can be achieved realistically). The shielding setup is just simply a block of 4 foot normal/light concrete (with a density of 2.35 g/cm3), which is the case for the roof of ERL. In the simulation, electrons hit straight (90o) into the concrete wall. We examine the radiation dose at 1 foot and 20 foot (as if it is the ceiling) above (or behind, as the gravitational force is ignored anyway) the concrete. The initial input file for the simulation is attached in the Section 3 at the end of this document.

2. Results

Initial attempt was to use 2-D mesh tally (a tabulation in MCNPX) to find the doses. But very quickly, it has become obvious that this method would not yield enough statistics. Therefore, F5 point/ring detectors (a variational method for tabulation) have been employed to find the doses behind the 4 ft concrete. The results of dose are shown in rem per incident-electron.

Figure 1 and Figure 2 show the doses in the unit of rem per incident-electron versus the radial distances from the original transverse beam center (x=0, y=0) at 1 ft and 20 ft above/behind the concrete respectively.

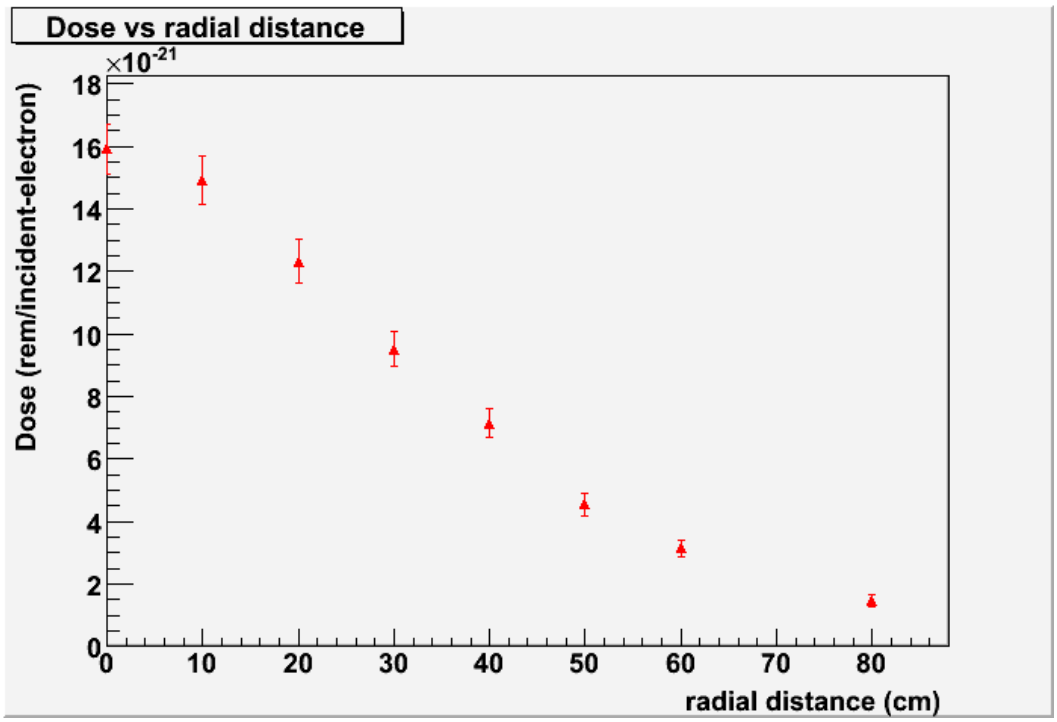

Figure 1: The doses (rem per electron) at one foot above/behind the concrete versus the radial distance from the original transverse center (x=0,y=0) of the beam.

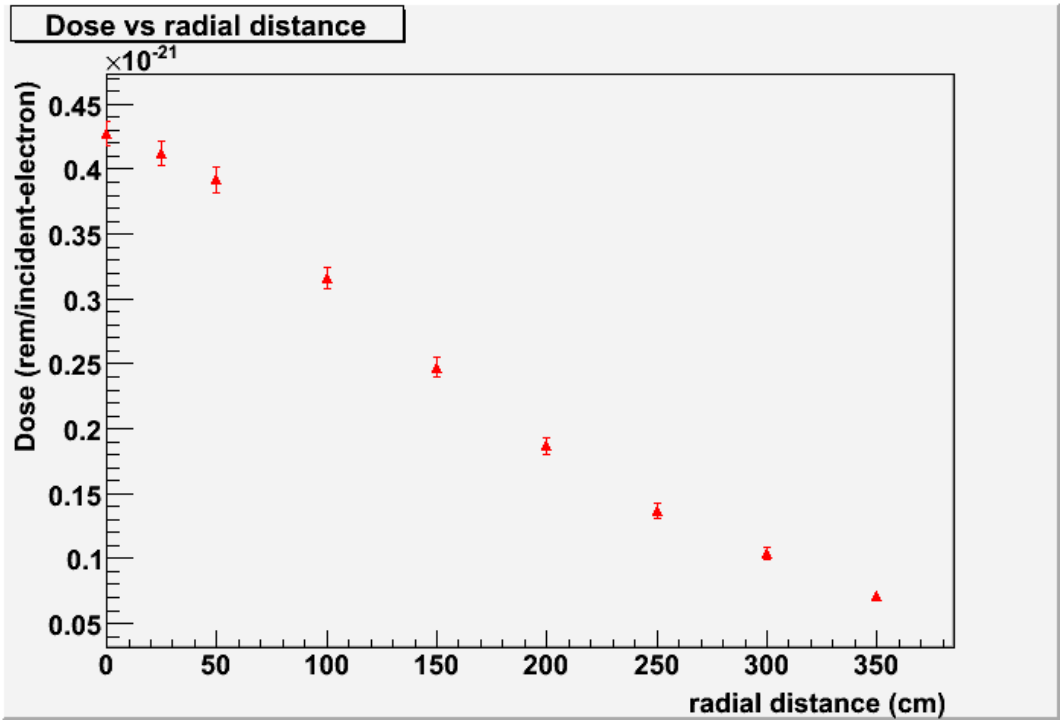

Figure 2: The doses (rem per electron) at 20 feet above/behind the concrete versus the radial distance from the original transverse center (x=0,y=0) of the electron beam.

For illustration, at 1 ft and 20 ft above the concrete, the highest doses are 1.591×10-20 and 4.272×10-22 per electron; and if the peak current is 2 μA, the doses would be 0.715 mrem/hour and 0.0192 mrem/hour.

All the doses here are due to photons as the energy is too low (ie. below the photonuclear for the materials in question) to produce neutrons. The plots shown above are the results of repeated runs with an accumulated statistics of 500 million events.

3. Appendix: MCNPX input code

```
ERL radiation behind 4 ft concrete --- Sept. 24, 2012
c
c Concrete walls
c
1 1 -2.35 -1 imp:n,p,e,h=1
c
c vacuum
c
2 0 -2 imp:n,p,e,h=1
3 0 -3 imp:n,p,e,h=1
c
c
c -- don't care region
c
999 0 1 2 3 imp:n,p,e,h=0
c ====================================
c ====================================
c
c z=0 is where the concrete starts
c x=y=0 is the center of the beam
c
c 4' concrete
c
1 rcc 0. 0. 0. 0. 0. 121.92 100
c
2 rcc 0. 0. 0. 0. 0. -0.2 100
c
c
c this is exactly 20'
c
c 3 rcc 0. 0. 121.92 0. 0. 609.6 400.
c
c Give it a bit more space
3 rcc 0. 0. 121.92 0. 0. 616.0 400.
c
c
c -------------------------------------------------------
```

```
c -------------------------------------------------------
c
c
c Materials
c
c Concrete
m1 1001 .1686 8016 .5762 13027 .0219 14028 .19350 14029 .00980 14030 .00650 &
20000 .0191 26056 .0044
mx1:h j j j j j j 20040 j
mx1:p j j j j j j 20040 j
c
SDEF erg = 3.5 par=3 dir=1.0 vec = 0. 0. 1.0 x=0. y=0. z=-0.1 wgt=1
c
c
DBCN 52734873
c
phys:n 3.6
phys:h 3.6
c
c biased (hoping for better statistics)
c
phys:p 3.6 2j 1
phys:e 3.6
c
mode n e p h
c
c
c
nps 50000000
prdmp 5000000 5000000 1 10 5000000
c prdmp 2j 1
c
print
c
c Energy Bins (upper limits)
e0 1.0e-7 1.e-5 1.e-3 0.01 0.1 1. 2. 3.5 10.
c
c
F5:p 0. 0. 152.4 0
F15z:p 152.4 10. 0
F25z:p 152.4 20. 0

F35z:p 152.4 30. 0
F45z:p 152.4 40. 0
F55z:p 152.4 50. 0
F65z:p 152.4 60. 0
```

```
F75z:p 152.4 80. 0
c
F95:p 0. 0. 731.52 0
F105z:p 731.52 25. 0
F115z:p 731.52 50. 0
F125z:p 731.52 100. 0
F135z:p 731.52 150. 0
F145z:p 731.52 200. 0
F155z:p 731.52 250. 0
F165z:p 731.52 300. 0
F175z:p 731.52 350. 0
c
df0 iu=1 fac=2.77777777778E-4 log ic=10
c
c
c tmesh
c rmesh1:p dose 10 1 1 2.77777777778E-4
c CORA1 -60. 99i 60.
c CORB1 -60. 99i 60.
c CORC1 116.92 126.92
c rmesh11:p dose 10 1 1 2.77777777778E-4
c CORA11 -400. 99i 400.
c CORB11 -400. 99i 400.
c CORC11 726.52 736.52
c cmesh21:p dose 10 1 1 2.77777777778E-4
c CORA21 0. 99i 60.
c CORB21 116.92 126.92
c CORC21 360.
c cmesh31:p dose 10 1 1 2.77777777778E-4
c CORA31 0. 99i 400.
c CORB31 726.52 736.52
c CORC31 360.
c endmd
```

C-AD

Radiation

Safety Minutes of the Subcommittee Meeting of Sept. 5 & 20, 2012

Committee

Issued: Oct. 17, 2012

Subject: ERL Low Power Test

Present 9/5/12: D. Beavis, A. Etkin, R. Karol, N. Kling, D. Phillips, B. van Kuik, I. Ben-Zvi, M. Minty, P Sampson, A. Zaltsman, B. Sheehy. P. Sullivan, C. Theisen, T. Seda. L. Hammons, C. Montag, J. Dai, W. Xu, A. Zaltsman, and D. Kayran

Present 9/20/12: D. Beavis, A. Etkin, R. Karol, B. van Kuik, H. Kahnhauser, C. Theisen, C. Montag, and J. Sandberg

The ERL would like to conduct a series of simple low power tests before the ARR has been conducted to verify that accelerator is ready to operate. To conduct the limited low power tests the Department has requested that the RSC review the plans for the test and make recommendations that would provide for safe low power operation. The Department would need to request an exemption of the Accelerator Order. The exemption requires review by the Laboratory Environmental Safety and Health Committee (LESHC), which will make a recommendation to the ALD for ES&H and the DOE Area Office.

The exemption request is using Paragraph 3.c.(2) of the Accelerator Order, DOE Order 420.2C. This is implemented in the Accelerator Safety Subject Area[1] of the SBMS. An initial draft of the request[2] was provided. The exemption request was not reviewed at this meeting but will be at the next. The materials were not distributed well enough in advance to provide members with sufficient time to review. A meeting will be scheduled next week to make final recommendations. This meeting will provide for an overall introduction.

The low power test is considered critical for this import R&D work at ERL. It is also important in the advancement of projects such as electron ions colliders including eRHIC. However, the committee must ensure that the Department has had proper internal reviews so that it does not take on too much risk.

Description

I. Ben-Zvi made a presentation[3] of the plans for the low power test. The test will be conducted in two phases. The first phase will have the electron beam from the gun be

transported into a Faraday Cup located close to the gun. The beam will not be bent into the vertical chicane. The second phase will have the electron beam transported to a G5 dump which will be located in a straight section downstream of the five-cell cavity. The cavity can be used to accelerate the beam to energies up to about 23 MeV.

The gun is expected to be commissioned in December. The initial goal for the gun is to achieve an energy of a least 1 MeV and increase to a desired energy of 2.5 MeV. The initial power for the gun is expected to be 25 micro-Watts. The power of the beam from the gun is expected to eventually reach approximately 1 W during the two phases. The facility design was based on a continuous loss of the gun beam of 1000 W, although the as built configuration has not been compared to the initial configuration[4] used in the analysis.

Preceding the low power beam tests will be a Cold Emission Test (CET) of the gun. This should provide some initial radiation surveys external to the shielding for x-rays emanating from the gun area (with no beam). The CET will be conducted as an RGD, and under all the C-AD RSC requirements.

Gun Beam to faraday Cup.

It is suggested that the first dipole be RS LOTOed during the first phase of the testing. This will prevent any possible deflection of the beam. **The external dose from a fixed source along the beam line or at the Faraday cup for 70 Watts at 2.5 MeV is less than 0.3 mrem/hr if the shadow shield does not protect the exterior area.**
The calculation uses broad beam TVLs and is expected to be conservative.

Recommendations:

1. RS LOTO first dipole. **(CK-ERL-fy2103-821)**
2. Place alarm level for chipmunks at 5 mrem/hr. **(CK-ERL-fy2103-822)**
3. Escalate alarm levels as surveys demonstrate the adjacent areas are properly protected. **(CK-ERL-fy2103-823)**
4. Post area around the shielding as a Controlled Area- TLD required. **(CK-ERL-fy2103-824)**
5. Provide temporary posting to keep unauthorized people away until area surveys are complete. **(CK-ERL-fy2103-825)**

Gun to G5 dump

The second phase of the test has the low energy beam transported to the G5 dump. The beam will be transported through the five-cell cavity and at some point will be accelerated to 20-23 MeV. Any dipole along the transport must be evaluated for being all potential energies.

The vertical chicane has four vertical bends. The first bend is 15 degrees down followed by 30° up, the 30° down, and then 15° up. Each dipole has a power supply that can deliver 10 amps. A clear statement of the bending power of each will need to be provided

to the committee. It was noted that they are intended to run at 80-90 percent of the maximum current. The committee recommended that C. Montag and D. Kayran report back to the RSC on the optics elements.

The horizontal bending dipoles will be RS LOTOed to prevent beam from being directed towards the side walls, except for possible beam fault studies. The vertical bends in the chicane could direct the beam to the roof. The committee requested that Kin Y. examine the issue of beam directly striking the roof shielding for an estimate of the dose on the shielding roof and the building roof. The calculation has been completed[5] and will be reviewed at the next meeting.

The experiment will limit the beam current with a series of software and hardware controls including the duty factor. There was substantial discussion on the methods the experiment employ for the administrative controls. They should provide a document clearly stating how this is conducted, controlled, and authorized. A limited number of personnel will be authorized to change the administrative controls and its software. The work will be performed under the ERL conduct of operations. Operations procedures will have the operator monitor the beam power and take appropriate action if the beam power exceeds the limits for the test. The controls are not of the rigor that the committee typically uses to prevent several factors of ten intensity excursion. The ACS will utilize either the present interlocking chipmunks or the interior non-interlocking chipmunk to provide the appropriate level of assurance that radiation levels outside the shielding do not become a concern. This may include changing the two monitor chipmunks to become interlocking. A specific proposal will be presented by R. Karol and D. Beavis at the next meeting.

The committee requested that J. Sandberg and C. Theisen examine the effort to upgrade the two non-interlocking chipmunks to interlocking. After the meeting A. Etkin suggested that these two chipmunks be tied into adjacent interlocking chipmunks. They already have separate readout and this technique would require a small effort, although not usually considered acceptable for a permanent installation. It is expected that the full committee will approve this short term method for implementing the chipmunk interlocks on these two chipmunks.

The transport to the dump should be divided into two sub-phases. After delivery of 1-3.5 MeV beam to the dump a survey shall be conducted with controlled and stable conditions. In addition, at least one fault study shall be conducted at the chicane. RCTs are expected to be at the area for the initial tuning.

The low power tests are expected to operate for up to one week per month for several months. After initial surveys the expected occupancy of adjacent areas should be considered in conjunction with the “routine” low power testing. The low power gun test may require from 100 to 1000 hours of operation to provide the necessary understanding of the gun operation.

The dose rate outside the shielding has been estimated[6] for 25 MeV beam on the G5 beam dump. **For 70 watts at 25 MeV the dose rate in the isleway by the power supply building will be 0.004 mrads/hr.**

Recommendations:

1. Consideration of the effectiveness of the configuration for all phase must be considered. For example, an operator may decide to not transport the beam to the G5 dump but to take it to the Faraday cup. If this is to be allowed then the ACS must protect against the faults. **(CK-ERL-FY13-826)**
2. RS LOTO the dipole after the five-cell cavity. **(CK-ERL-FY13-827)**
3. The beam will go through the vertical chicane between the gun and the five-cell cavity. Review the analysis of dose on the shielding roof and the building roof submitted by Kin Y. **(CK-ERL-FY13-828)**
4. There is no access allowed for the shielding top. **(CK-ERL-FY13-829)**
5. The Project should provide a table of maximum bends at a set energy. This should be accurate to 5%. If necessary consider upper current limits on the dipole power supplies. **(CK-ERL-FY13-830)**
6. The Project should provide the maximum expected quad steering from a single quadrupole or a set of quadrupoles. **(CK-ERL-FY13-831)**
7. Provide the administrative means to limit beam power (current) and control changes. **(CK-ERL-FY13-832)**
8. A detailed plan for limiting the dose outside the shielding using the chipmunks must be documented. **(CK-ERL-FY13-833)**
9. Documentation on optical element performance. **(CK-ERL-FY13-834)**
10. Establish a maximum amount of time for low power testing before an ARR is performed. A ninety-day duration for low power testing has been proposed. **(CK-ERL-FY13-835)**
11. Crane cab must be prevented from being over the roof shielding. **(CK-ERL-FY13-836)**
12. Fault study at the chicane and others as appropriate. **(CK-ERL-FY13-837)**

References

1. https://sbms.bnl.gov/sbmsearch/subjarea/40/40_SA.cfm?parentID=40
2. E.T. Lessard ,"Exemption request for Low power Testing of ERL SC Gun and 5-Cell Cavity", August 30, 2012
3. I. Ben-Zvi PowerPoint presentation, Sept. 5, 2012;
4. D. Beavis memorandum, " Dose rate Estimates for ERL Penetrations ", March 28, 2008, http://www.c-ad.bnl.gov/esfd/RSC/Memos/ERL-Penetrations3.pdf
5. Kin Yip, "Radiation due to 3.5 MeV Electron Beam", Oct. 1, 2012, http://www.c-ad.bnl.gov/esfd/RSC/Memos/Kin_Radiation_MeV_10_1_12.pdf
6. D. Beavis memorandum, "G5 Beam Dump Simulation", Jan. 12, 2012; http://www.c-ad.bnl.gov/esfd/RSC/Memos/G5%20Beam%20Dump%20Simulation.pdf

CC:

RSC minutes file
RSC ERL file
RSC
Attendees

Collider-Accelerator Department

BROOKHAVEN NATIONAL LABORATORY

Building 911B – P.O. Box 5000
Upton, NY 11973-5000
Phone 631 344 7124
Fax 631 344 5568
beavis@bnl.gov
www.bnl.gov

managed by Brookhaven Science Associates
for the U.S. Department of Energy

Memo

date: *January 13, 2014*

to: *RSC*

from: *D. Beavis*

subject: *ERL Roof Transition*

The initial design of the ERL roof was at a fixed height of 13 feet above the floor. To aid in rigging operations the central section of the roof was raised to 14 feet forming a transition at both end of the area. To examine the impact of this change on radiation dose through the roof a simple model was used in MCNPX[1].

A target of cooper was placed at z=0 with the roof transition at z=200 cm. The roof over the target is at y=300cm and after the transition the roof is at 270cm. In both areas the roof is 120cm thick and composed of light concrete. The copper target is 10cm long and 1.5 cm in radius. The model has rotation symmetry about the z-axis to simplify the calculations. Figure 1 show the zx view of the geometry.

[1] MCNPX version 2.7C was used for the analysis. D. PELOWITZ (ed.), "MCNPX User's Manual", Version 2.7.0, Los Alamos National Laboratory, LA-CP-11-00438 (2011).

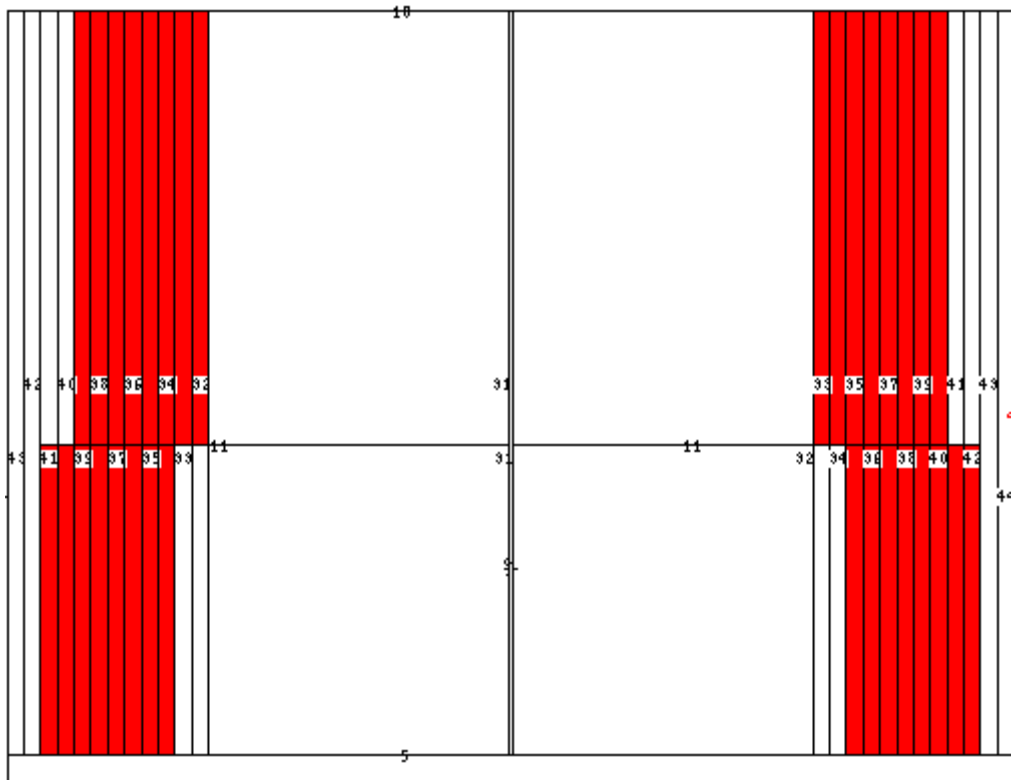

Figure 1: Model used to simulate ERL roof transition.

A pencil beam of electrons was transported into the target and the electrons and photons tracked. The production of neutrons was ignored in this treatment. The side wall was divided into 15cm layers to allow for changing the importance factors as a function of depth in the concrete. Fluence to dose conversions factors were used to tally the dose per electron at different depths in the concrete and as a function of z. The results for two radii are displayed in Figure 2. The radius of 390 cm corresponds to the top of the roof section before z=200 cm. The dose per electron (blue squares) is consistent with a distribution for three feet of light concrete except for a minor change related to the geometry change at z=200. The dose per electron (green circles) at a radius of 390 cm is consistent with the distribution for four feet of light concrete with a sharp rise near the transition, where it sees effectively one foot less of concrete.

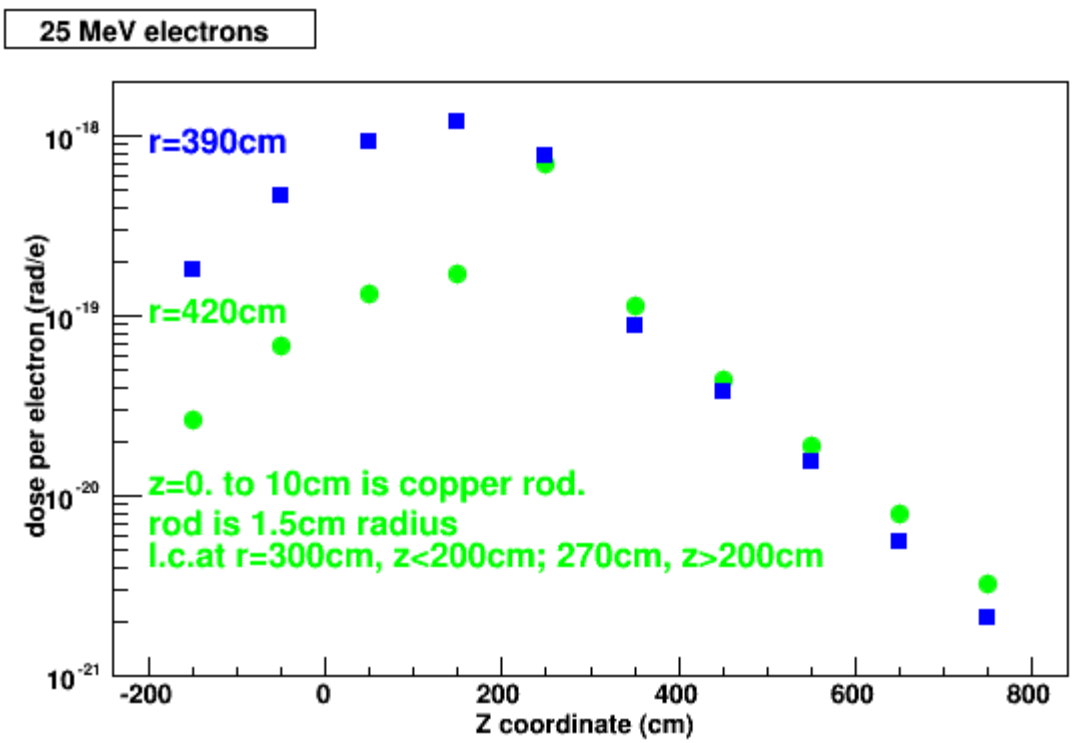

Figure 2: Dose per electron at radii of 290 cm and 320 cm. The roof transition occurs at z=200.

The dose rate through the roof and at the transition is dependent on the beam power on the target. Ten Watts of beam power corresponds to $9*10^{16}$ and $9*10*^{15}$ e/hr for energies 2.5 MeV and 25 MeV, respectively. Point detectors were also used in the analysis and were used to get a slightly higher dose than the flux average over a distance of a meter. The dose rates near the transition for 10 Watts of electron beam are 0.006 mrem/hr and 7.1 mrem/hr for energies of 2.5 MeV and 25 MeV respectively. Access to the roof is not allowed when the Gun or Five-Cell Cavity are being operated. There are some large cracks between the roof beams that form the roof. The dose rates out these cracks could be as high as 1.1 rem/hr (2.5 MeV) and 5.8 rem/hr (25 MeV) if the entire source can shine directly through the crack. Although the actual dose rates are expected to be smaller and not represent whole body exposure they are still a serious concern if personnel access the roof.

The dose rate as a function of depth was tallied and can be used to examine the effective attenuation of the shielding. The results for 2.5 and 25 MeV electrons are shown in Figure 3 for the bin 100cm<z<200cm, where the peak of the dose distribution occurs. The lines in the plot are eyeball fits ignoring the first point. The corresponding TVLs are 36 cm and 20 cm for 25 MeV and 2.5 MeV respectively. These results can be used to extrapolate to thicker shields if required.

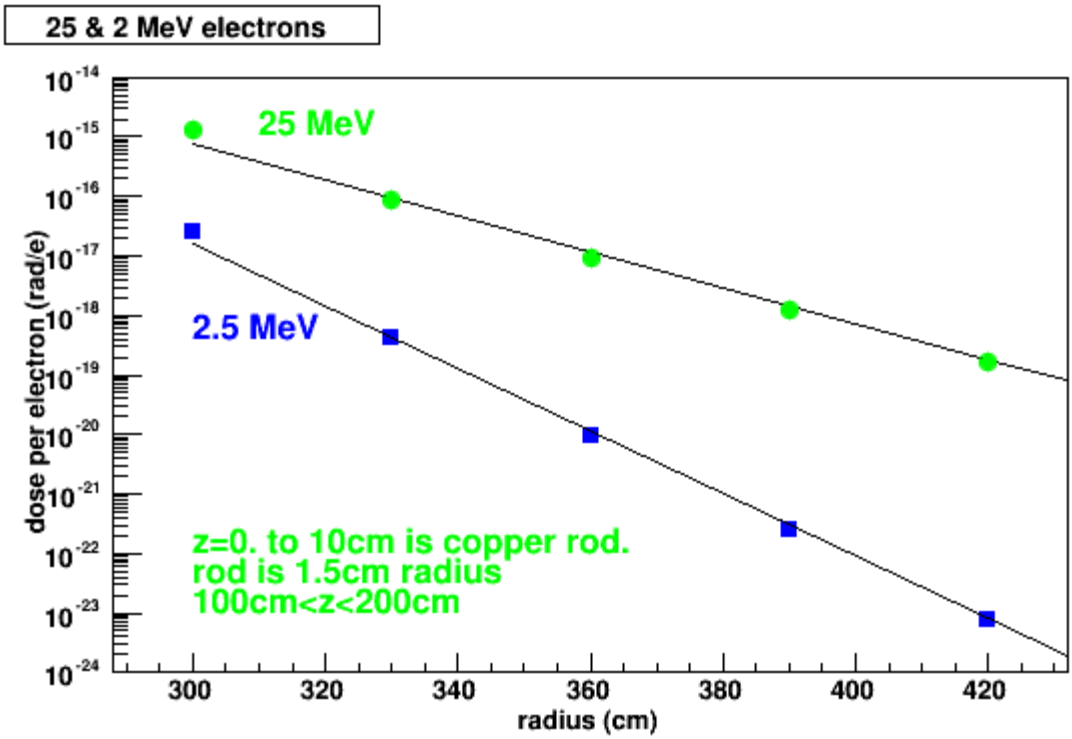

Figure 3: The photon dose through the roof light concrete for 2.5 MeV (blue squares) and 25 MeV (green circles) striking a copper rod. The concrete begins at a radius of 300 cm.

The roof transition appears to produce a localized elevated dose rate consistent with three feet of effective shielding. The dose rates for the 10W test are not an issue for the transition. The radiation hazards from other weaknesses such as the cracks or the roof ODH vent are probably more relevant concerns if someone accesses the roof. For higher power tests in the future it will be important to correlate the dose rates at the chipmunks to the dose rate on the roof including the weak locations.

CC: RSC
D. Kayran
D. Phillips
W. Xu
I. Ben-zvi

C-AD

Radiation

Safety Minutes of RSC Subgroup Meeting of March 13, 2014

Committee

Issued: March 13, 2014

Subject: Review of ERL Dump Prints

Present: D. Beavis, D. Phillips, G. Mc Intyre, and J. Fite

The shielding prints for the ERL beam dump were reviewed. Most of the prints have been signed earlier in the year as QA-3. The steel shielding around the beam dump is being used as area shielding so all the prints relevant to the shielding need to be changed to QA-1. Assembly prints that show the integration of the beam dump and the shielding can remain QA-3.

Extraction line assembly views are given at the bottom of these minutes to aid in understanding of the discussion. A full set of large prints was used for the review.

There is a steel shield between the dipole and the beam dump. The original purpose of this shield was to provide for equipment protection from the back-shine from the beam dump. However, portions of the beam dump are struck by electrons that are at the same elevation as the horizontal seams in the concrete wall. The x-ray transmission through the seams is very sensitivity to the source elevation. In addition, the analysis of interlocks and faults has not been completed for the transport at and beyond the first dipole. An incorrect set-point of the last dipole or if the magnet turns off will cause the beam will strike the Pb shield. It was decided that the Pb shield should be considered as area shielding and the prints for the Pb shield be upgraded to QA-1.

The RSC Chair noted that he is not a fan of stacking small Pb bricks to make shields and would encourage projects in the future to make such shields out of larger blocks that cannot be moved by hand. Naturally, there are economic and schedule issues associated with such construction biases. The bricks are overlapped in one dimension but not the other. This was not considered to be a problem. However, the Pb assembly will need to be banded and posted.

Guidance to the project was provided by K. Yip on the Pb shield design to protect the equipment. The details of the calculation or at least the results need to be archived.

There are two three-inch diameter holes with associated plugs. The plug on the six-inch thick plate was recommended to be changed so that it completely fills the hole rather than the last three inches. The plugs can be made flush with the outside of the steel surface rather than a large protrusion. Tack welding the plugs in place was considered acceptable in case the ports are needed for future use.

The project would like to change the design of the end steel. A cast-iron B block will be centered about the beam dump in both vertical and horizontal directions. This will eliminate in the shield materials near beam height. The final design needs to consider whether the cast-iron B block needs shielding on top. It was noted that the block serves to shadow the labyrinth wall from both losses in the beam lines and from the radiation generated in the beam dump.

Finally, it was noted that the 22 MeV beam transport downstream of the first dump bending magnet may not be in place. The configuration for beam operations must be determined and analyzed before beam is taken to the beam dump.

ATS-ERL-May 1, 2104-(Beavis & Mc Intyre)

Complete beam dump items:

1. Update appropriate prints to QA-1 including the Pb shielding
2. Band and post the Pb shield.
3. Archive the results of the Pb analysis
4. Modify plug and attach both
5. Finalize end shielding design
6. Determine configuration past first dump dipole and analyze.

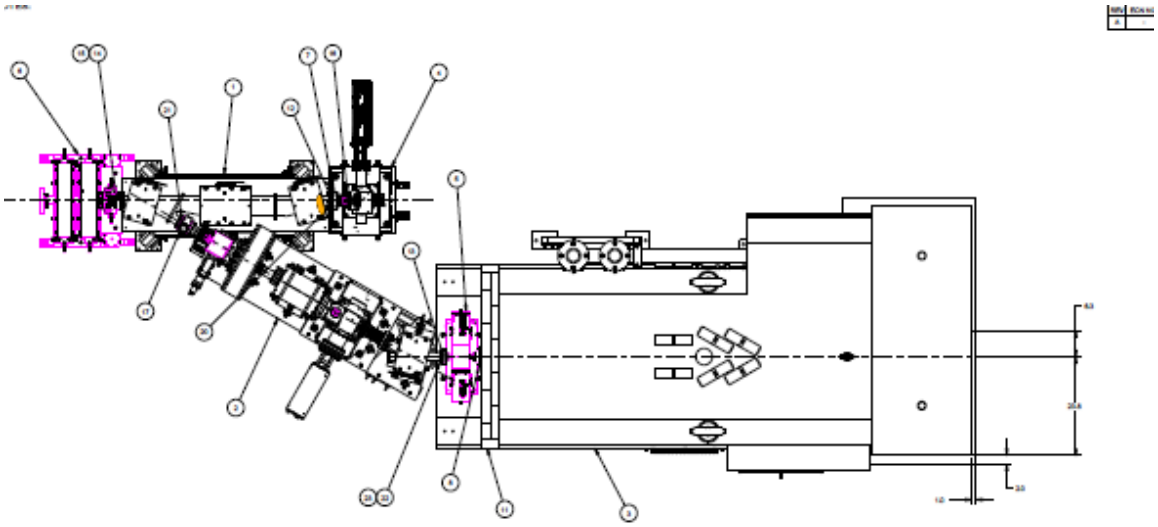

Figure: Plan view of shield and dump area, drawing 010606213.

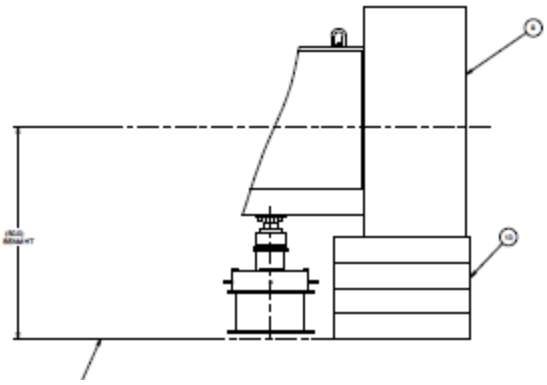

Figure: Side view of beam dump end and cast ion B block, drawing 010606213.

CC:

RSC minutes file
RSC
Attendees
W. Xu
I. Ben-Zvi
D. Passarello
T. Blydenburgh
D. Kayran

C-AD

Issued: August 9, 2013

Radiation

Safety Minutes of RSC Subcommittee of August 1, 2013

Committee

Subject: Beam Current Monitoring and Limit for ERL Low Power Test

Present: D. Beavis, A. Etkin, R. Karol, M. Minty, P. Sullivan, C. Schaefer, C. Theisen, J. Reich, B. Sheehy, L. Hammons, M. Wilinski, J. Jamilkowski, and D. Kayran

'The low power testing has been discussed[1,2] in previous RSC meetings. The Department has requested a low power test under an exemption so that design issues can be understood and the final design determined before an ARR is conducted. The purpose of this meeting is to examine the devices being used to limit the beam current.

Status of the Gun, Laser, and Five Cell Cavity

The gun and the five cell cavity have undergone cold emission testing. The gun has achieve a maximum voltage of 2 MV and will not exceed this voltage during the low power testing. The five cell cavity has achieved 10 MV in CW and 18 MW in pulsed mode. The cavity will quench when operated in CW mode for periods of time exceeding about 10 minutes due to a thermal issue. It is expected that it will be operated in pulsed mode or for brief periods in CW mode followed by being off for a sufficient period of time to maintain thermal stability.

The laser presently installed is not the final laser system and cannot support the final design value of 500mA but can support operation of a 50 mA beam current. This provides nearly a factor of 10 reduction in potential escalation in beam current when compared to the final design goals.

Current Limiting Controls

A draft of the operating procedure, OPM 2.5.6 Rev. 2, for monitoring the beam current for the low power test is being finalized. The RSC was asked to examine the devices used to monitor and limit the beam current that are listed in section 5.1.1. Section 5.1 lists the following controls:

5.1 ERL Beam Energy and Beam Power Controls

The following limits are the maximum beam energy and beam power allowed for low-power testing. The ERL Operations Coordinator is responsible to comply with paragraphs 5.1.1 and 5.1.5.

5.1.1 The ERL Cathode Laser beam must have a locked, passive attenuator in the laser beam path and a laser duty factor control system to set the laser pulse energy and repetition rate, and an interlocking current measuring device.

5.1.2 Electron kinetic energy must be limited to 3.5 MeV for the superconducting RF gun (reference CASE section 2.1).

5.1.3 The electron beam power leaving the ERL superconducting gun or the 5-cell cavity must be limited to 70w averaged over 1-hour (reference CASE section 2.2).

5.1.4 Electron kinetic energy must be limited to 25MeV to the dump (reference CASE section 2.3).

5.1.5 The electron kinetic energy, the one-hour average beam power or beam current, and the kinetic energy to the dump must be monitored and logged in the ERL logbook at least daily during low power testing to ensure that the limits in 5.1.2, 5.1.3 and 5.1.4 are satisfied.

Requirement 5.1.2 and 5.1.4 are satisfied by the device design. Pickup sensors will measure the achieved voltages and they will be recorded to a computer database.

Requirement 5.1.5 will be monitored by the controls system and recored to the computer database. The operators will also record the average beam power into the ERL logbook.

Requirement 5.1.3 is achieved with the devices listed in section 5.1.1 and the potential response of the operator.

The three means listed in section 5.1.1 to limit the average beam power to less than 70 Watts are:

1. Passive laser attenuator
2. Laser power to the cathode via duty factor
3. Interlocking current devices

B. Sheehy provided a brief overview[3] of each of the system system that controls the power limit. A brief note was also provided[4] before the meeting.

Members were most comfortable with the passive attenuator in the laser optics, which is essentially a hardware failsafe device. The laser has an adjustable attenuator referred to as an internal attenuator. External to the laser is a manual external attenuator (half wave plate and a polarizer) that can be locked in position when the desired attenuation is achieved. The controls will then allow the internal attenuator to adjust the intensity up to

the 100% level established by the external attenuator. There are only two keys that have been released for the laser room. The ESH coordinator has one and B. Sheehy has the other. No other keys will be released for use during these tests. These two personnel will control access to the laser room and access to the passive attenuator. This was evaluated as sufficient controls to prevent inadvertent changes to the external attenuator.

The laser may not illuminate the cathode until after the attenuation has been measured by the power meter. The external attenuator will provide a minimum of a factor of ten in reduction of the laser light intensity. The beam current is limited to at most 5 milli-Amperes by the existing maximum laser power and the minimum attenuation of the external attenuator.

The following must be checked before beam operation **(ATS-ERL-Aug. 31, 2013-B. Sheehy & A. Etkin):**

1. **HWP and POL rated for the full laser energy density.**
2. **Procedure to measure the laser power with the power meter anytime the external attenuator is changed and before it excites the photocathode.**

The laser operates at 9.4 MHz. There is a laser pulse nearly every 100 ns. Each pulse would generate electrons from the cathode if allowed to be transmitted to the cathode. The number of electrons released is a product of the light intensity which is limited by the external attenuator and the Quantum Efficiency (QE) of the photocathode. An optical switch will be used to limit the number of contagious pulses that can be transmitted to the photocathode. In addition the optical switch can be opened many times a second. The number of openings (gate frequency) and the number of laser pulses allowed in each gate (width of the gate) will determine the number of pulses allowed to the cathode. The control system will determine the gate width and gate frequency based on a maximum of 70 Watts, or less to provide a safety margin.

The QE is measured before the photocathode is placed inside the gun. It will again be measured after it become operational. The controls program parameter will be adjusted for the possible change. Most effects cause a decrease in QE with time and contamination usually is the principal culprit.

Configuration management of the laser controls must be documented in a procedure and include the requirement that and change in parameters or software requires both authorization and verification that the setup is correct using the pickoff system prior to transmission to the photocathode. A scaler will be available in the control room to monitor the number of laser pulses allowed by the system. This will enable the operator to monitor the number of pulses. The controls software is a two-layered system. The upper level is a user interface allowing the operator to put inputs into the system. The software then checks that the input values are in the allowed ranges. The lower system provides the machine protection using a National Instruments RIO platform (a field programmable gate array- FPGA). The sections of code programmed specificly for checking the input parameters and for the download of the RIO platform must be checked by a second programmer to ensure the correct actions are provided by the system. **A**

procedure must be in place for the configuration management of the control system for the laser. (ATS-C Theisen&J. Jaminkowski-Aug. 31, 2013-ERL)

Two devices will be used to measure the electron beam current. The first is a Faraday Cup (FC) just after the first vertical bend. The initial setup requires that the vertical chicane be RS LOTOed off and the beam transmitted to the FC for measurement and radiation surveys. The electronics for the FC have been built in house. The second device to measure current is an Integrating Current Transformer (ICT) that is located just after the gun. This device will measure the beam current whether the chicane is on or off. The ICT and Faraday cup will be compared to the laser power and the QE for consistency. A factor of two of better is required. The Faraday cup and the ICT will be cross-checked for agreement.

The ICT can be fired to a maximum frequency of 10 kHz. The width of the integration time can range from 100ns to 9 micro-seconds. The transit times in the laser system and the gun are know and can be used to provide a good initial time offset for the ICT window. This also means that if the ICT is used for the current measuring then the gate width of the optical switch cannot be greater than 9 microseconds. The pickup between the laser and the external attenuator will be used to determine that the setup is correct. A procedure will establish that the ICT is properly setup for each running condition. **(ATS-ERL-Etkin& B. Sheehy-August 31, 2013)**

The ICT and the FC are not considered failsafe. The FC does have a bias voltage that eliminates some failure modes.

The ICT and the FC will provide an interlock through the Machine Protection System (MPS). The electronics provide an analogue signal that is used by the MPS to provide an interlock. The interlock will occur in less than a second. **A response procedure is required to provide the operators with the correct response to current interlocks and any required authorizations and limitations. (ATS-ERL-L. Hammons&D. Kayran-August 31, 2013)**

An engineering review must be conducted for the ICT and the FC. It should ensure that the device is monotonic for the possible beam currents and device settings. The review should include the procedures used to setup the cross check the devices. **(ATS-ERL-M. Wilinski& J. Sandberg-August 31, 2013)**

The layout of the existing chipmunks was discussed. Each chipmunk has cables about 30 feet long so they can be moved to optimum positions. It was suggested that the chipmunk at the east end of each labyrinth be moved closer to the beam to provide more sensitivity for potential beam faults. In addition, the two chipmunks that are not interlocking will be converted to interlocking (via daisy-chaining to existing interlocking chipmunks) and positioned to interlock if the beam strikes an object with the maximum allowed beam power. One will be positioned to be sensitive to beam faults near the vertical chicane at the gun energy. The other will be located between the five-cell cavity and the beam

dump. It will be sensitive to beam faults downstream of the cavity and potentially the amount of beam on the beam dump. This will provide a means of using the chipmunks to indirectly limit the current. Some adjustments in positions and potential shielding will be needed to make this scheme work. **The committee thought this extra protection was worthwhile for the low energy tests and recommends that the two chipmunks be moved and the other two be daisy-chained for interlocks and mover to appropriate locations to provide protection. (ATS-ERL-D. Beavis& R. Karol-August 31, 2013)**

Maximum External Dose Rate
(note added after the meeting)

It is worthwhile to examine the potential risk for external radiation if only the attenuator provides a minimum reduction in power of a factor of ten, which could result in a possible maximum beam current of 5 mA at 2MV. The dose estimates provided for the G5 test[5] can be used to obtain the dose rate estimates beam striking the beam stop outside four feet of light concrete. For 10 kW of 2 MeV electrons the dose rate is estimated to be .09 mrem/hr. If the shielding of the steel is removed then this would be approximately 20 mrem/hr. This would be the dose rate on the roof. In the isle-way on the side of the power supply house the dose rate would be 0.9 mrem/hr. Therefore, a failure of the system to control the laser pulses and to interlock on beam current from the gun will not result in occupied areas outside the shielding becoming a radiological area. The operators will have a scaler to monitor the laser pulse rate and stop any such fault in a short time. Coupled with the chipmunks located around the facility there is a very small risk that radiological levels could occur outside the facility enclosure for the gun operation.

Acceleration of the electron beam with the five-cell cavity greatly escalates the potential radiation outside the shielding. The increase in potential exposure rates is due to the higher beam power of up to 50 kW provided by the five cell cavity and the reduced effectiveness of the concrete shielding. The estimated external dose rate outside the roof for 50kW of 25 MeV electrons is 30 mrads/hr. In the isle-way on the floor the dose rate is 3 mrads/hr. If the shielding for the side of the dump is ignored to simulate an upstream fault these levels would increase by a factor of 25.

It was noted that if the exemption was approved that the RSC is expected to provide the verification process that was normally provided by an ARR.

References

1. http://www.c-ad.bnl.gov/esfd/RSC/Minutes/9_5.20_12_Minutes.pdf
2. http://www.c-ad.bnl.gov/esfd/RSC/Minutes/10_24_12Minutes.pdf
3. B. Sheehy, "Overview of Power Limitation Controls"
4. Laser Power Limitation to assure electron beam power limitation
5. D. Beavis,"G5 Beam Dump Simulation", Jan. 12, 2012; http://www.c-ad.bnl.gov/esfd/RSC/Memos/G5%20Beam%20Dump%20Simulation.pdf

CC:

RSC minutes file
RSC
D. Phillips
Attendees
H. Kahnhauser
T. Blydenburgh
D. Passarello

Prepared by: Wencan Xu

Date: April 13, 2014

Reviewed by: Dana Beavis

Date: 5/9/14

Approved by: Thomas Roser

T. Roser

Date: 5/12/14

ERL RSC Check-Off List for Low Power Beam Testing of the ERL SRF electron gun

Completion of this ERL RSC Check-Off List is a prerequisite for beam testing.

Upon completion of this check-off list in the MCR, the ERL cold emission testing (CET) of the SRF electron gun may commence.

1. _____ **(LP)** **RSC LOTO has been applied to prevent the 1 MW klystron from being energized. This or equivalent must remain in place until the check-off list is complete.**

2. _____ (LP) RSC LOTO has been applied to prevent excitation of five-cell cavity.

3. _____ (LP) C-AD OPM 2.5.6 must be followed for the low power test.

4. _____ (LP) Sweep procedure in place for the blockhouse and west area.

5. _____ (IG) Chipmunk operation verified.

6. _____ (IG) Chipmunk alarm and interlock levels checked against table below.

7. _____ (LE) ERL block house shielding and barriers inspected and acceptable low power beam operations

8. _____ (LE) ERL block house shielding prints approved.

9. _____ (LE) Barriers are in place at both ends of the trench and posted.

10. _____ (LE) The ladder at the power supply house has a locked barrier and is posted.

11. _____ (LE) Access panel on side of electronic room is locked closed.

12. _____ (RCD) Second floor access panel posted with "HP escort required when ERL is operating. Contact ERL control room at ext 3135 for operating status"

13. _____ (RCD) Post area between West wall of the ERL and building wall as "HP escort required when ERL is operating. Contact ERL control room at ext 3135 for operating status"

14.

15. _____ (ACG) Chipmunks required for CET have interlock function checked. (See attached list).

16. _____ (ACG) PASS test is complete for ERL.

17. _____ (ACG) State Tables approved for ERL beam operations.

18. _____ (ACG) PASS wiring prints approved.

19. _____ (ACG) PASS software under configuration management.

20. _____ (RCD) Entrance gates to Building 912 NEEBA as "Controlled Area, TLD required for entry.

21. _____ (RCD) East side support building, first and second floors posted "HP escort required when ERL is operating. Contact ERL control room at ext 3135 for operating status"

22. _____ (LE) Area surrounding ERL is posted as no ladders/no climbing.

23. _____ (LE) First dipole after gun is RS LOTOed off.

24. _____ (ACG) All bypasses or temporary jumpers in place have been discussed with RSCC.

25. _____(ACG) ODH interlocks certified.

26. _____ (RSCC) Chipmunk response reviewed for low power test.

27. _____ (RSCC) ERL shielding has been examined and found acceptable.

28. _____ (RSCC) Building roof requirements given to LE and RCD.

29. _____ (RSCC) Radiation survey precautions discussed with RCD.

30. _____(RSCC) Chipmunk response for low power tests acceptable.

31. _____(RSCC) Seam analysis and penetration updates provided to RSC for low power test.

32. _____(RCD) Building roof over ERL posted " No access to this area of roof when ERL is operating. Contact ERL control room at ext. 3135 for operating status".

33. _____(CEE) Conditions from review of Laser and ICT for beam intensity completed, as per review memo.

34. _____ (LP) Blockhouse and west fenced areas have been verified as swept.

35. _____(LP) Five-cell Cavity RS LOTOed off.

36. _____ (LP) A procedure provides operators instruction for responding to ICT interlocks.

37. _____(LP) Access procedure for locked west area to ensure any accesses do not leave the area unlocked without requiring a sweep of ERL.

38. _____(LP) LP will notify R. Karol or E. Lessard when beam operations begin.

39. _____ (LP) ERL ready for low power test.

40. _____ (OC) List completion verified by on-duty operations coordinator.

When the list above is complete then the ERL SRF electron gun may begin operations with beam.

The on-duty RCT needs to be in the area to conduct surveys of the shielding and penetrations. After the surveys have been reviewed, the configuration of the area posting near the ERL block house will be determined. A detailed survey will be conducted and documented after stable operations of the gun at 1W are achieved.

RCD	Radiological Control Division: P. Bergh or designee
LE	Liaison Engineer: D. Phillips or designee
LP	Liaison Physicist: D. Kayran or designee
MCRGL	MCR Group Leader: P. Ingrassia or designee
RSCC	Radiation Safety Committee Chairperson: D. Beavis or designee
OC	Operations Coordinator
ACG	Access Control Group: J. Reich or designee
RCT	Radiation Control Technician
IG	Instrumentation Group: M. Minty or designee
CEE	Chief Electrical Engineer: J. Sandberg or designee
RGDC	C-AD RGD Custodian: A. Etkin or designee

CHIPMUNKS			
Name	Location	Interlock [mrem/hr]	Alarm [mrem/hr]
NMO170	North Labyrinth	2.5	1
NMO171	North Gate	2.5	1
NMO172	1 MW Waveguide port	2.5	1
NMO173	50 kW Waveguide area	2.5	1
NMO174	West cryo pipe exit	2.5	1
NMO175	South Gate	2.5	1
NMO176	South Labyrinth	2.5	1
NMO177	Internal to ERL1	-	-
NMO178	Internal to ERL 2	-	-
NMO181	Gun power limit	20	10
NMO182	Power limit gun and dump	20	10

Collider-Accelerator Department

BROOKHAVEN NATIONAL LABORATORY

Building 911B – P.O. Box 5000
Upton, NY 11973-5000
Phone 631 344 7124
Fax 631 344 5568
beavis@bnl.gov
www.bnl.gov

managed by Brookhaven Science Associates
for the U.S. Department of Energy

Memo

Date: *May 27, 2014*

To: *RSC, D. Phillips and D. Kayran*

From: *D. Beavis*

Subject: *ERL Shielding Holes, Seams, and Penetrations for 3.5 MeV Beam*

Introduction

There have been several changes to the shielding since the original analysis was conducted. In addition, the analysis did not examine the potential dose that could escape through the shielding seams between the shield blocks. Several of the walls have single layers of shielding. Imperfections in the shielding blocks and the floor cause gaps to exist at many of these seams. In particular, the single layer roof has several gaps between roof beams exceeding 1cm in width. The focus of the presented analysis will be for 3.5 MeV electron beam to examine the shielding changes and imperfections.

The following are examined in this report:

1. Shielding seams transverse to the beam direction.
2. Shielding seams running in the direction of the beam.
3. The end-wall seam between the wall and the roof beam.
4. The change in the laser port.
5. The change in the cryo-piping ports.
6. Sensitivity to the beam loss location for selective examples.

Conclusions

It is concluded that the present shielding configuration is sufficient for low power beam and radiation surveys. Most results present are for 100 Watts of beam loss. The actual power of the beam for the low power is expected to be less than 10 Watts and radiation surveys will more likely be conducted at 1 Watt. The radiation surveys should provide some check on how well the seams are sealed around the side and end walls of the facility. The roof seams are an issue that needs additional consideration. This report will be updated or supplemented to include analysis for 25 MeV electron beam and the shielding surveys that will be conducted at low power tests.

It would be useful to have a better understanding of what limits the maximum sustainable power for beam loss. The lower power test may provide data on the limits that the present chipmunks can provide.

Simulation

The Monte Carlo code MCNPX 2.7c[1] was used to examine the dose from electrons striking material inside the ERL enclosure. In this report copper was used as the target material. The target was a rod of copper 10 cm long and with varying radius, but typically a 0.1 cm radius. In some simulations a 4cm diameter disk of copper was used. The thickness was usually 1cm. The relative location of the target to the seam or penetration can cause large changes in the potential dose that is calculated outside the shield. In most examples a location is chosen that is expected to create a nearly maximal dose outside the shield.

The electron and photon dose per electron is plotted in Figure I for 0.1 cm radius copper rod as a function of distance along the beam direction. For a thin target the electron dose from scattered electrons exceed the photon dose in the backward and sideward direction. If the target thickness is increased the photon dose has a small change but the electron dose decreased substantially. The doses per electron on target can be used to estimate the potential dose rates through shielding using Tenth-Value Layers (TVLs) or as the entrance dose challenging a penetration.

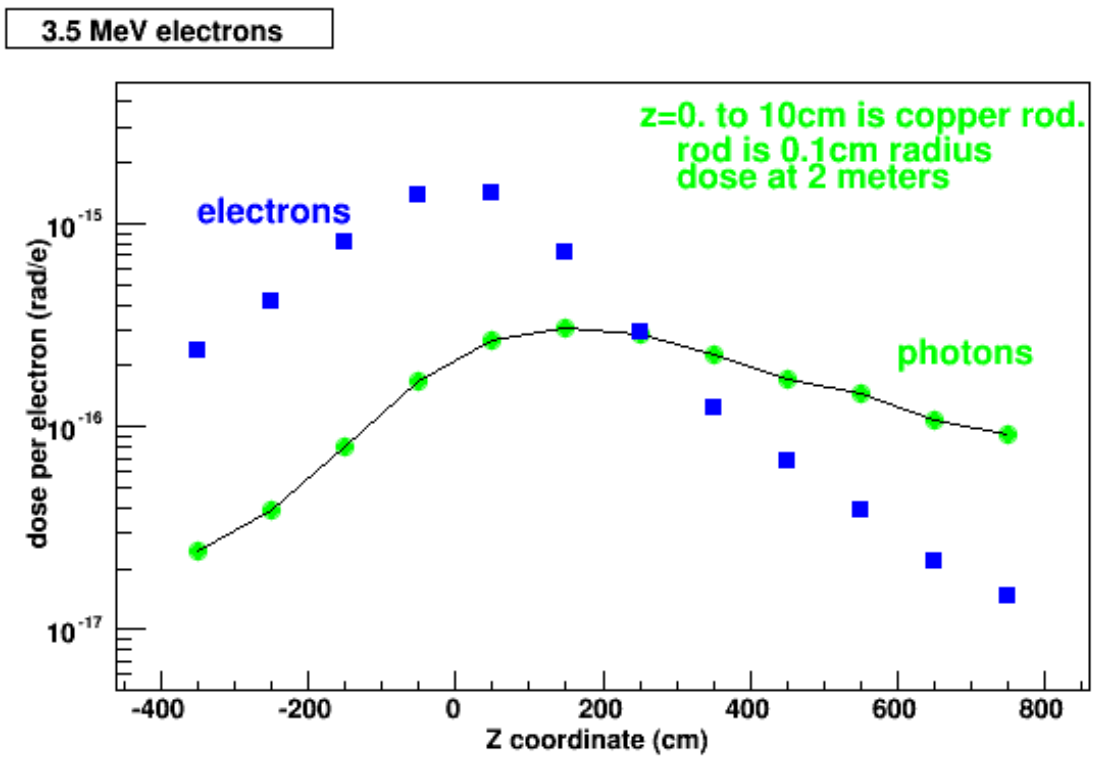

Figure I: The dose per electron 2 meters from a copper rod as a function of z. The dose is given for electrons and photons separately.

North End Wall Seam at 9 foot Elevation

The north end wall is designed with roof beams spanning over the top of the concrete walls forming the labyrinth. Initial inspection the seam over both walls revealed that the roof beam was almost an inch above the concrete sidewall and both seams over the two end walls are at essentially the same elevation.

[1] MCNPX version 2.7C was used for the analysis. D. PELOWITZ (ed.), "MCNPX User's Manual", Version 2.7.0, Los Alamos National Laboratory, LA-CP-11-00438 (2011).

A flange of 1cm thick copper was used to approximate the electron beam striking an object. The flange was located at the end of the five-cell cavity with a distance to the first wall of the labyrinth of 540 cm. The geometry is shown in Figure 2. The concrete roof before the labyrinth is included in the simulation. The concrete roof ends half way over the second end wall forming a ledge. Water pipes are run along this ledge as well as cable tray supports.

A 3.5 MeV electron beam was directed at the center of the flange. At the edge of the concrete end wall the photon dose per electron is $3.2*10^{-20}$ rads/e. 100 Watts of beam corresponds to $6.44*10^{17}$ e/hr. The dose rate for the beam striking the flange is 21 mrads/hr. The dose rate is sensitive to the flange thickness. If the flange is changed to a thickness of 0.1 cm then the dose rate for photons increases to 110 mrads/hr. The dose from electrons can be ten times higher for thin objects if there is no material to absorb the electrons that are scattered. The calculations were repeated for the flange located at a position that simulates the Faraday cup that will be used in the first beam test location. In this case the flange is 1200 cm from the first labyrinth wall. The dose rates are a factor of two smaller than the results for the flange downstream of the five-cell cavity. A layer of Pb has been placed along the outer crack on the ledge to reduce the dose rates.

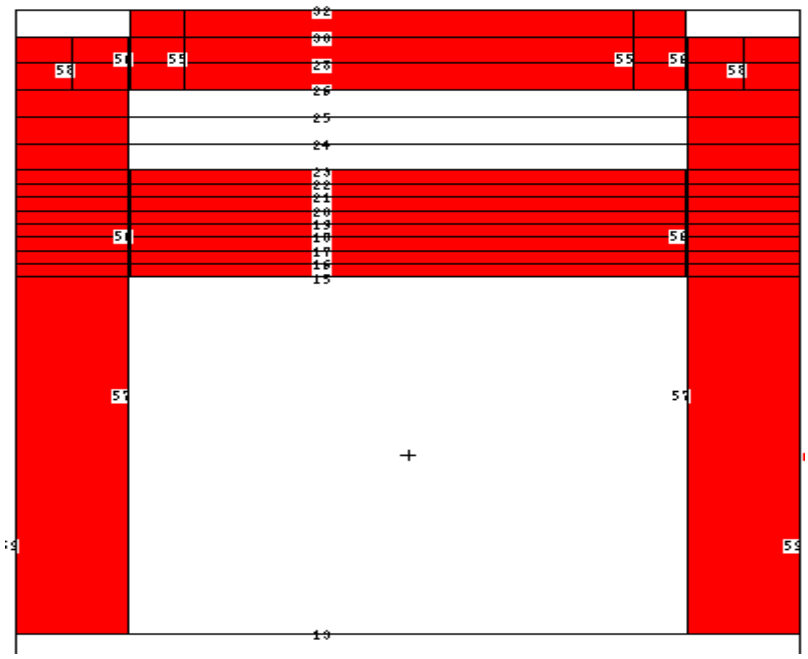

Figure II: The simple model of the two concrete walls and the walkway between them. The 2.54 cm seam is between surfaces 56 and 57. The dose was scored at surfaces and with point detectors.

The effectiveness of the Pb can be estimated using published TVLs. The Pb bricks placed along the seam will be 5 cm high and 10 cm thick. Using a TVL of 3.5 cm provides an attenuation[2] of $1.5*10^{-3}$ for 10cm of Pb. The Pb will completely remove the electrons that are scattered from thin targets. For 100 Watts of 3.5 MeV beam the dose rate at the side wall is reduced to 0.1 mrem/hr. The estimated attenuation is expected to be conservative. A source of uniform photon fluence with fixed-energy was used as a second

[2] See NCRP report No. 144, Figure 4.1.

method to estimate the attenuation of a Pb brick on top of concrete. The results are presented in Table I. The results are in good agreement with the use of TVLs.

Table I: Photon Dose Attenuation for 10 cm of Pb

Photon Energy (MeV)	Attentuation
3.0	$1.7*10^{-3}$
2.0	10^{-3}
1.0	$1.3*10^{-4}$
0.5	$2.2*10^{-5}$
0.2	$4*10^{-6}$

The same geometry was used to estimate the dose rate for 100 Watts of 25 MeV electons striking a 1cm thick disc of copper 540 cm from the labyrinth wall. The photon dose rate was calculated to be 270 mrads/hr after the concrete wall. Including the electron dose rate increases the dose rate to 640 mrads/hr. The scattered electrons do not contribute as much to the total dose at the higher energy. The dose averaged photon energy is approximately 3 MeV so one would expect a dose rate of 0.35 mrads/hr with 10 cm of Pb after the seam. The calculation was repeated for a 1mm thick disc. The dose rate is substantially lower since the electrons to not lose a substantial portion of their energy in the target.

During the recent installation of the beam dump the roof beams over the inner wall were lowered to decrease the height of the seam over the first wall. It is expected that this change will substantially reduce the dose rate for beam losses.

Roof and Wall seams Transverse to the Beam

There are a series of seams that are transverse to the direction of the beam. The side walls have relatively narrow gaps in the vertical seams and are typically spaced about every 10 feet. The roof has seams every two feet and some of the gaps are larger than 1 cm. Since several of the roof gaps are large it is worthwhile to examine them first even though the concrete shielding roof is excluded of personnel. The building roof is estimated to be 6 meters above the shielding and will be roped off and excluded of personnel[3] pending results from the initial radiation surveys.

The simulations are conducted using rotational symmetry about the z-axis[4]. The electron beam strikes a 0.1cm radius copper rod that extends from z=-5cm to z=5cm. The roof seam gap starts at z=0 and extends to z=gap size. The simple model[5] used to estimate the dose is shown in Figure III. The dose for photons and electrons was estimated 30 cm above the seam and then 6 meters above the seam which corresponds to the approximate roof location. This analysis was conducted for the copper rod for seams of several different gap sizes. For 100 Watts of 3.5 MeV electrons the photon and electron dose rates are given in Table II.

[3] RCD personnel will enter the building roof over ERL to conduct radiation surveys to document the risk. The RCTs may enter with C-AD experts that assist them in the surveys.
[4] The use of rotation symmetry reduces the computation time substantially. It will overestimate the dose for a flat surface such as the roof as the measurement point moves away from the beamline.
[5] A photo of a large roof seam is shown in Picture I.

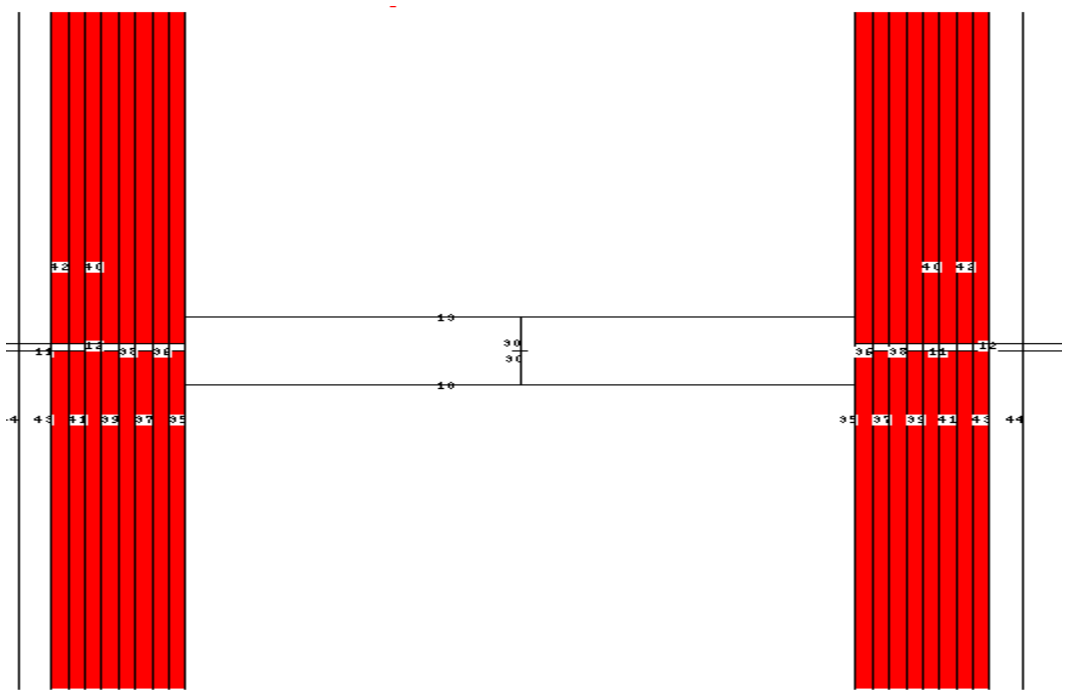

Figure III: Model of the 1cm gap between roof beams. The seam is located at z=0. to 0.5 cm. The target rod is 0.1 cm in diameter and is located from z=-5cm to 5 cm.

Table II: Dose Rate for 100 Watts of 3.5 MeV Electrons Striking a Thin Copper Rod

Seam gap (cm)	location	particle	Dose rate (mrads/hr)
2.0	1 foot above seam	photon	**80**
2.0	1 foot above seam	electron	6600
2.0	At building roof	photon	1.6
2.0	At building roof	electron	230
1.0	1 foot above seam	photon	**36**
1.0	1 foot above seam	electron	1800
1.0	At building roof	photon	1
1.0	At building roof	electron	120
0.5	1 foot above seam	photon	**7**
0.5	1 foot above seam	electron	900
0.5	At building roof	photon	0.4
0.5	At building roof	electron	60
0.2	1 foot above seam	photon	**0.4**
0.2	1 foot above seam	electron	270
0.2	At building roof	photon	0.4[6]
0.2	At building roof	electron	20

[6] This data point most likely is an anomaly, but the cause has not been resolved.

Most of the seams are less than 0.5 cm and even with the scrapping location almost directly underneath the gap should not be an issue (7 mrads/hr). The photon dose rates on the building roof are not much of a concern for 100 Watt beam losses at most locations. Even for a 2 cm seam gap the photon dose rates are less than 2 mrads/hr on the building roof. However, there are circumstances where the dose rate on the building roof could be unacceptable. This will be discussed later in this section.

The dose rate from electrons appears to be a potential concern. However, it only requires about 2 g/cm^2 of material for absorb most of these electrons. The 10 meters of air provides 1.2 g/cm^2 and the building roof material probably provides sufficient material to eliminate most of the electron dose on the building roof. The beam pipe is typically 0.15 cm thick stainless steel or in some locations is constructed of thicker AL vacuum boxes. There are loss locations where the scattered electrons do not transverse much material to escape the beam transport system. For locations outside the shielding that are closer than the building roof the electron dose may be more relevant.

The center of the 10cm copper rod is more than 3 radiation lengths from the initial beginning of the rod. 3.5 MeV electrons have a range of 0.27 cm in copper. Therefore, the highest electron and photon dose rates outside the seam may be caused when the front of the rod is closer to the gap. Figure IV displays the sensitivity of the dose results as a function of where the target front surface is relative to the roof seam. The dose from electrons is not shown but is approximately a factor of ten higher. The dose out a seam has a narrow band in target locations where the photons and electrons stream directly out of the enclosure and the dose is dominated by $1/r^2$. Once the target is shifted and a reflection is required for radiation to propagate through the crack the dose drops several orders of magnitude. The building roof dose is then dramatically different from the dose exiting the shield since the scattering point is near the entrance of the crack.

Figure I can be used to estimate the dose when adjusted for $1/r^2$. The dose rates for 100 Watts of 3.5 MeV electrons are:

Table III: Dose Rate Through A 1cm Roof Seam At 1 Foot Above The Seam

Particle	Dose rate from Figure 1 (rads/hr)	Dose rate from calculations (rads/hr)
Photon	40	11
Electron	180	80

There is reasonable agreement between the simple technique and the more detailed calculations.

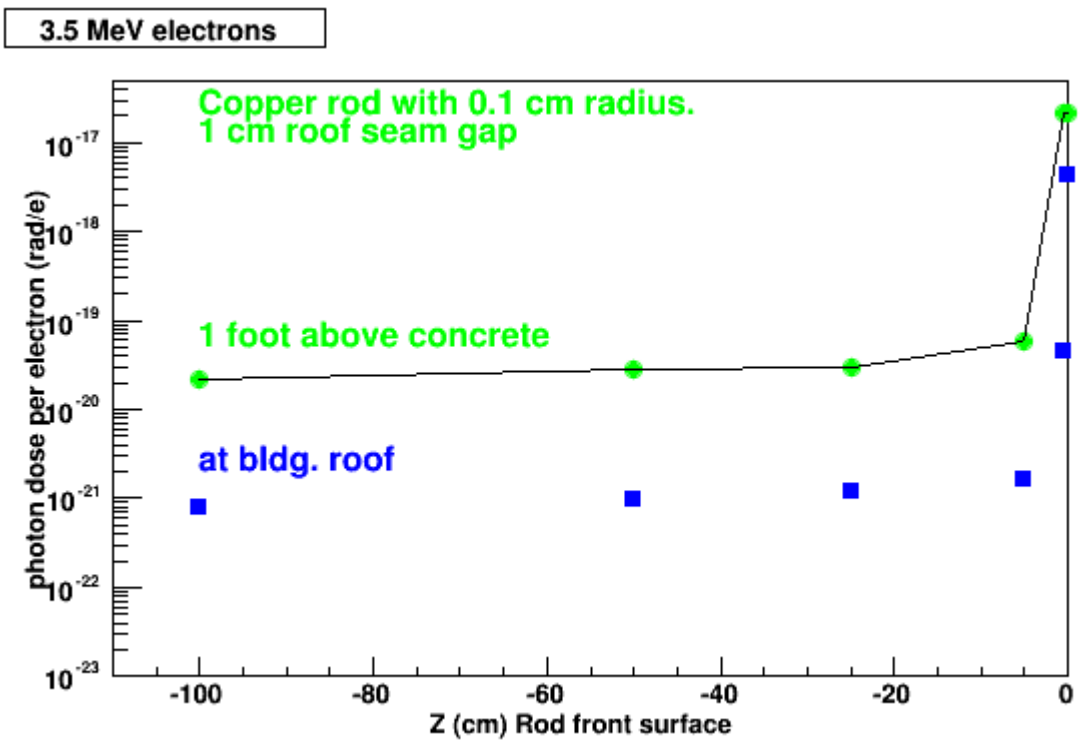

Figure IV: Photon dose from a rod as a function of the location of the rod front surface to the roof crack. The green circles are at 1 foot above the seam. The blue squares are on the building roof.

The distance used for the beam line to the roof is approximately the same as the distance from the gun beam to the east side wall. One can use the numbers without modification for vertical seams on the east-side wall. The east-side wall typically had small vertical seams. Recently an effort was made to reduce all side wall gaps to less than 2mm by placing steel plates into the seam providing 15 cm to 30 cm of steel. The seams were visually inspected and most are now much smaller than 0.2 cm. The photon dose through a 0.2 cm seam the dose rate is expected[7] to be 0.4 mrads/hr or less unless the front surface of the target is directly across from the seam. The front of the target was aligned with the start of the seam to estimate the photon dose outside of a 0.2 cm gap was calculated. The 100 Watts of 3.5 MeV electron beam produced a photon dose rate of 13,000 mrads/hr one foot outside the shielding gap. This could create unacceptable radiation levels if possible.

The west-side wall is more than twice the distance from the low energy beam line. Thus the dose rate challenging the gaps should be 4 times lower. Some of the seams were large and have been filled with steel plates. A barrier keeps personnel away from this wall for a distance of more than six feet. The increase in distance will help to reduce the potential dose for sources that are not directly in line with the vertical seams.

[7] The results from Table II have been used.

The vertical side wall seams have apparent dose rates that can be daunting for sources aligned directly across from a vertical seam. However, there are only five vertical seams along the low energy transport for each of the east and west side walls. Table IV provides comments for the five seams on each of side walls. The numbering starts with one and for the vertical seam at the upstream end of the gun.

Table IV: Comments on Vertical Side Wall Seams

Vertical Seam number	East Wall	West wall
1	Upstream of gun beam	Upstream of gun beam
2	Blocked by 2 foot heavy concrete	Clocked by Large heavy concrete block
3	Has line of sight for low energy but not first beam test	Has line of sight for low energy but not first beam test
4	Covered by second layer of concrete	Covered by steel block but overlap small
5	Adjacent to dump shielding	Blocked by steel

The vertical seams are satisfactory for the first beam test. The seams in which additional analysis or examination are highlighted in red. The third vertical seam is an issue for beam into the transport section upstream of the five-cell cavity.

The issue is to assure that no beam losses will not occur directly across from a transverse seam or to reduce the dose that can propagate through the gap.

Horizontal Seams

The horizontal seams between shielding blocks should have similar behavior as the transverse seams. The main difference is the horizontal seams have been positioned so they are at a different elevation than the beam. Therefore, the direct illumination through the seam by particles produced in the target is avoided. The copper rod was simulated with geometry that approximates to the east wall. The seam is 56 cm above the beam height and the inside surface of the concrete is 260 cm. The statistics were rather poor[8] but consistent with $3*10^{-19}$ rads/e of photon dose for a 0.2 cm gap. The result is in good agreement[9] with Figure IV for the roof gaps. Secondary sources can illuminate the sidewall seams with photons that can go directly through the seams. The requirement for scattering should make these potential sources 100 times lower in illuminating the seam but there is less attenuation. These secondary sources can add to the total dose.

The horizontal side wall gaps have been decreased in size with steel plate and many are much smaller than 0.2 cm.

[8] The results used were after 15 hours of CPU.
[9] A factor of 90 is used based on Table II to adjust for the difference in seam gap sizes used between the side wall calculation and Figure IV.

Laser Port

The laser port was originally a rectangular port with dimensions 3 by 4 inches. The port was shadowed by the shielding[10] for the one megawatt waveguide. It became desirable to have the laser port in another location so a 3 inch diameter hole was bored through the shielding at a location approximately transverse to the first beam halo scrapers. The dose rate out the original laser port was estimated assuming that the port was shadowed by approximately two feet of heavy concrete. The new laser port is not shadowed for beam losses in the upstream transport. The dose rates out the laser port have been estimated using MCNPX in two stages. The first calculation provided the energy distribution and dose for electrons and photons. These distributions were binned in energy and then used as a source input in MCNPX. The source directed photons and electrons onto the area of the port based for the existing geometry. The simple model[11] of the shield wall with the Al spacer and the 1 inch lead shield is shown in Figure IV.

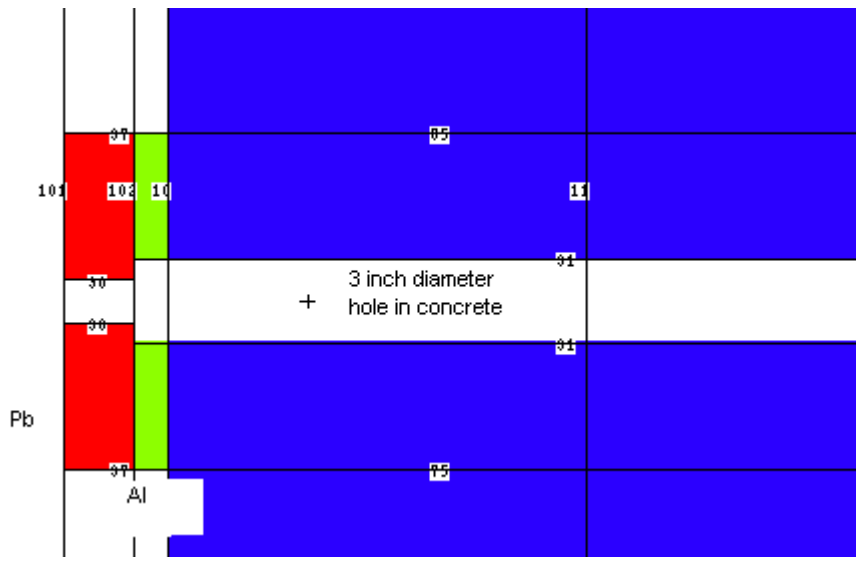

Figure IV: Pb shielding covering the entrance of the laser port inside the ERL shielding. The Al spacer does not shield the bored hole. The one inch diameter laser pipe is not shown.

The calculation used the 0.1 cm diameter rod on the beam line 255 cm away from east side wall and 137 cm above the port. For 100 Watts of 3.5 MeV electrons the dose immediately outside the port is 14 mrads/hr. At a distance of one foot from the wall the dose rate is 10 mrads/hr. Beam faults with beam power of 1000 Watts are not expected to be sustainable although this assertion has not been proven. If necessary additional shielding can be placed inside the ERL enclosure if the laser pipe valve is moved. The old laser port has some critical length cables being routed to equipment and cannot be completely plugged. The Faraday cup for the first beam test has two feet of heavy concrete between it and the new laser port. The first halo scrapper has no shielding between it and the new laser port and will be used for a fault study if possible. The halo scrappers will be locked in the open position until the machine is ready to conduct fault studies on the scrapper.

[10] http://www.c-ad.bnl.gov/esfd/RSC/Memos/ERL-Penetrations3.pdf
[11] A photo of the shield and laser tube is shown in Pic1 at the end of this report.

Cryo-pipe Penetrations

The cryogenics piping penetrates the shielding at an elevation of 13 feet. Square ports with sides 12 inches where placed in the shielding for the piping. There are four such ports on the west wall. The area beneath the ports will be swept and access controlled. Access requirements may change after radiation surveys are conducted for the shielding seams[12] and cryo-piping. An example of the geometry[13] used in the MCNPX analysis is shown in Figure V. The correct pipe wall thickness is used but it is assumed that the pipes are empty.

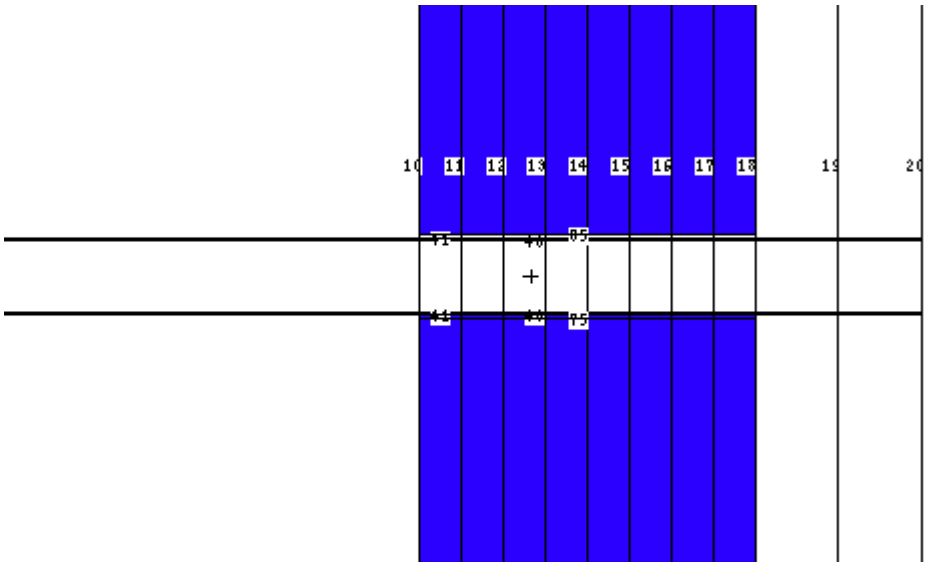

Figure V: Cross-sectional view of the round cryogenics pipe in the square hole for the west shielding. The pipe extends well into the enclosure but in the model is terminated two feet from the exterior of the shield wall.

The geometry was established for beam losses in the gun beam line. The distance from the beam line to the shielding wall is 6.1 meters. The beam line is 2.85 meters below the laser port center. The roof was not placed in most of the model calculations[14]. Electron and photon fluences were tallied on surface through the shield wall and outside. Of particular interest are the doses in the adjacent building which is the closest the personnel can approach with the barrier that has been placed between the west shielding wall the building skin.

---

[12] The access restriction was placed due to the large gaps in some of the shielding seams. Steel has been placed into these gaps to reduce the potential radiation.

[13] A photo of the cryo-ports closest to the gun taken on the outside of the shielding is shown in Picture III. A photo from the inside showing the two cryo-ports near the five-cell cavity on the inside of the shielding is shown in Picture V.

[14] The roof was included in several simulations. Without the cryo-piping it could increase the dose rates for photons by a factor of two. When pipes were added into the same model the dose with a roof was almost identical to the dose without a roof.

The photon dose rates as a function of radius from the pipe axis is shown in Figure VI. The dose rates are given at 930 cm from the beam line, which is the position of the building wall. The two stage technique discussed for the laser port was also used for the cryo pipes. The structure in the electron dose is caused by the cryo pipe absorbing the scattered electrons but some outer areas of the port the electrons are not shielded by the pipe. The dose rate fo a 100 Watt loss in the lower energy beam line is less than 10 mrads/hr. An interlocking chipmunk is located approximately 60 cm from the vent pipe and 90 cm from the vacuum jacketed cryo pipe. The interlock threshold is 2.5 mrads/hr which would like the peak dose out either of these ports to less than 25 mrads/hr. This chipmunk is not effective[15] in limiting the dose out the upstream cryo-pipe ports for beam losses some early sections of the low energy transport.

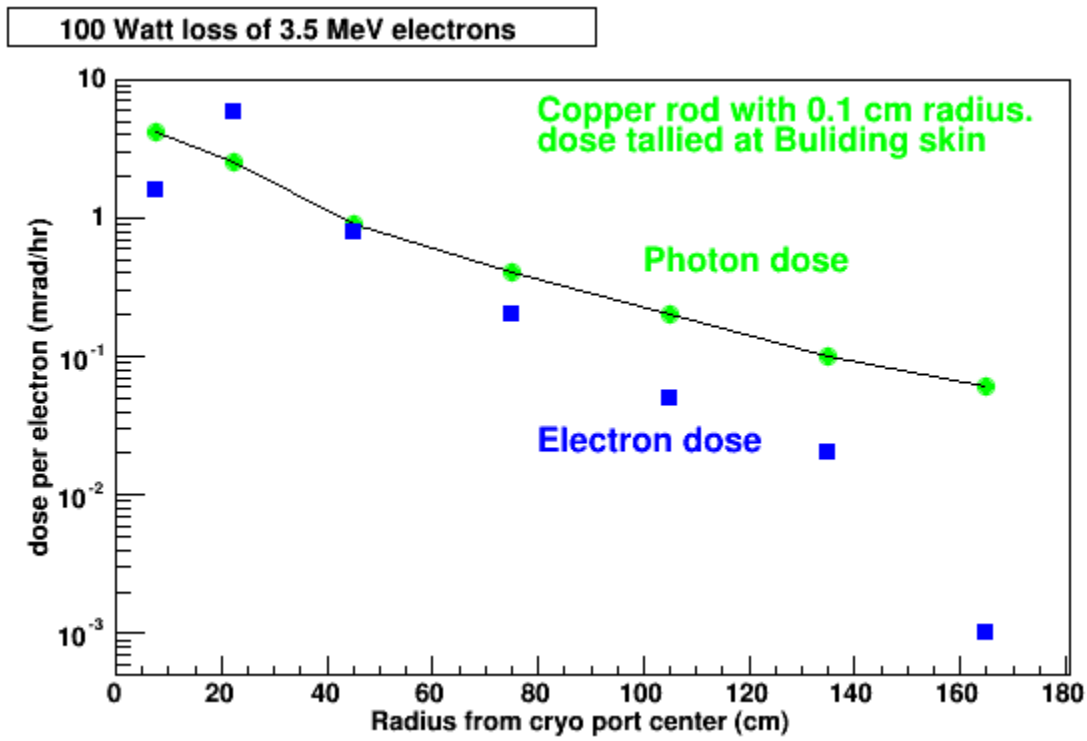

Figure VI: The dose rate as a function of radius from the cryo-port. Dose using surface dose averaged over annulus. The average radial position was used for the position.

Cc:

I. Ben-Zvi
W. Xu

[15] The large shielding block at the south end of the ERL ring shadows the chipmunk from some loss locations in the upstream gun transport.

Photos of Areas of Interest

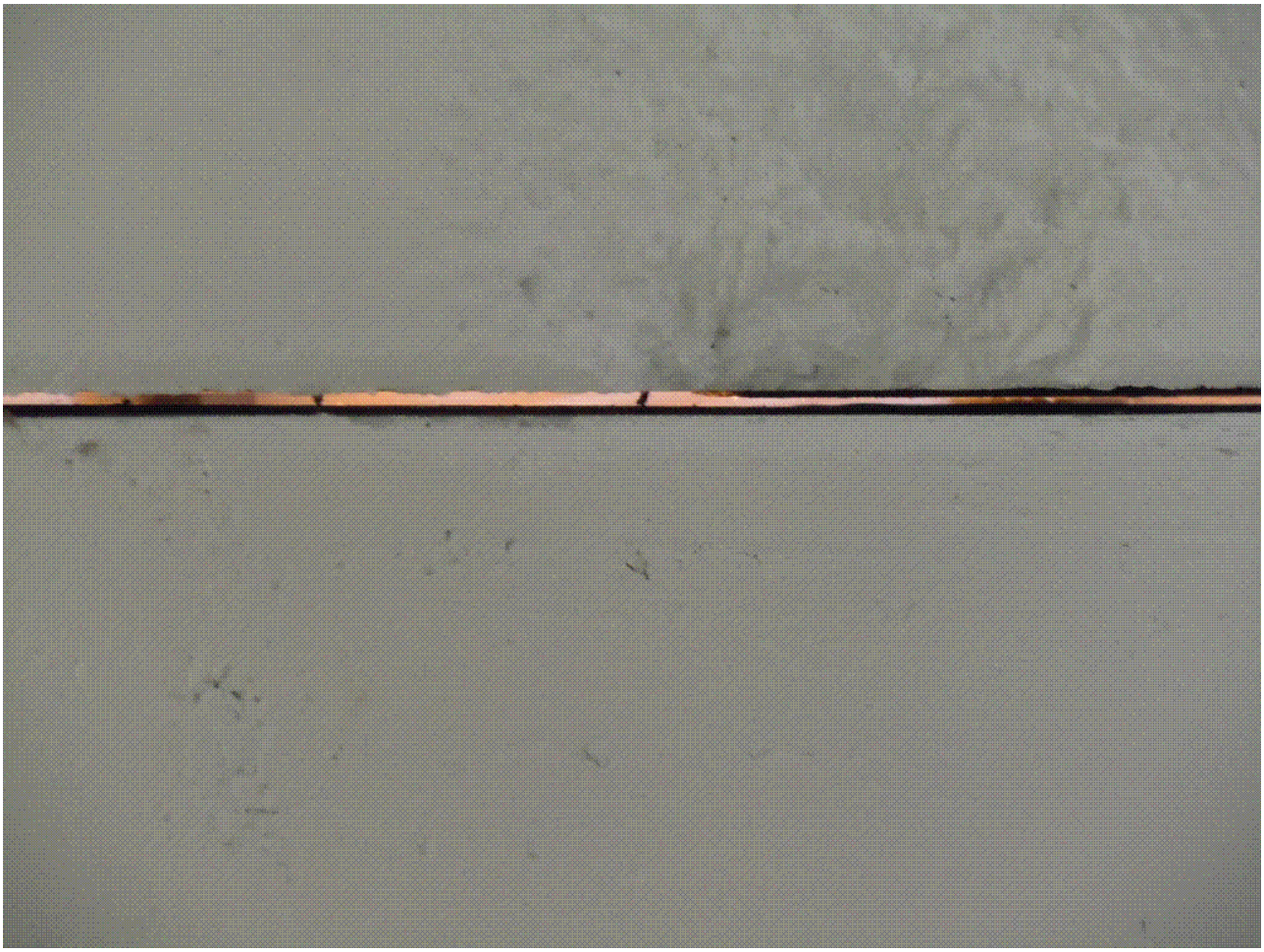

Picture I: Examine of a gap (~1cm) between to roof beams. The photon is taken from inside the enclosure look up through the seam gap.

Picture II: Photon of the new laser port with the Al spacer, Pb shield and the stainless steel pipe for the laser beam.

Picture III: West side barrier with cryo-pipes exiting the shielding at an elevation of 13 feet above the floor.

Picture IV: The inside of the cryogenics pipes near the fiver cell-cavity.

Picture V: Shows one of the joints on the west wall. The steel plate can be seen in both the horizontal and vertical seams.

Prepared By:
Wencan Xu
Date: April 16, 2014
Reviewed by: Raykowl
Date: 14/16/14
Approved by: Thomas Roser
T. Roser
Date: 4/16/14

ERL RSC Check-Off List for Cold Emission Testing of the ERL 5-cell Cavity and SRF gun

Completion of this ERL RSC Check-Off List is a prerequisite for cold emission testing of 5-cell cavity, SRF gun, and Fundamental Power Coupler (FPC) Conditioning.

Upon Completion of this check-off list and the completion of the ASSRC check-off list in the MCR the ERL cold emission testing may commence.

1. _____(LP) **RSC LOTO has been applied to prevent the 50 kW and 1 MW klystron power supply from being energized. This or the equivalent must remain in place till the check-off list is complete.**

2. _____(ACIG) Chipmunk operation verified.

3. _____(RSCC) The shielding has been examined and found acceptable for the cold emission test.

4. _____(LE) ERL Block house shielding and barriers inspected and acceptable for CET and FPC conditioning operations.

5. _____(LE) The barriers are in place at both ends of the trench and posted.

6. _____(LE) The ladder at the power supply house has a locked barrier and is posted.

7. _____(RCD) Post area between West wall of the ERL and building wall as CONTROLLED AREA, TLD required.

8. _____(ACG) Chipmunks required for cold emission testing have interlock function checked. (See attached list).

9. _____(ACG) PASS tests complete for ERL.

10. _____(LE) Waveguide is in place for 1MW system through penetration in second story of "condo"; the short plate on the end of waveguide is still in place, or the waveguide is connected to the SRF gun.

11. _____(LE) Waveguide for 5-cell cavity is terminated with short plate, or connected to the 5-cell cavity.

12. _____(RCD) Entrance gates to the ERL block house posted.

13. _____(RCD) Areas around the entrance gates roped off and posted CONTROLLED AREA, TLD required.

14. _____(RCD) The support building against ERL shielding is posted as no entry without an RCT during the cavity tests.

15. _____(RCD) On the east side of ERL, the alley way between the ERL Control Room and the ERL support building must be posted .

16. _____(RCD) The door to the Klystron posted.

17. _____(LE) Area surrounding ERL posted as no ladders/no climbing.

18. _____(ACG) All bypasses or temporary jumpers in place have been discussed with the RSCC.

19. _____(ACG) ODH interlocks certified.

20. _____(LP) The items listed above have been completed.

21. _____(OC) List completion verified by on-duty operations coordinator.

When the list above is complete then cold emission testing of the ERL 5-cell cavity may begin.

When the cavity is ready to potentially generate x-rays the on-duty RCT needs to be in the area to conduct surveys of the shielding and penetrations. After the surveys have been reviewed the configuration of the area postings near the blockhouse will be determined.

RCD: Radiation Controlled Division: P. Bergh or designee. Ext:5992
LE: Liaison Engineer: D. Phillips or designee. Ext. 4671
LP: Liaison Physicist: Sergey Belomestnykh or designee. Ext: 8448
MCRGL: MCR Group Leader: Peter Ingrassia or designee. Ext. 4272
RSCC: Radiation Safety Committee Chairperson: D. Beavis or designee Ext: 7124
OC: Operations Coordinator Ext. 8061(Wencan Xu)
ACG: Access Control Group: J. Reich or designee. Ext: 5335
RCT: Radiation Control Technician
ACIG: Accelerator Components & Instrumentation Group: Tony Curcio (4659)/Joe Citro or designate.
CEE: Chief Electrical Engineer: J. Sandberg or designee. Ext: 4682
RGDC: CA RGD custodian: A. Etkin or designee. Ext: 4006

ERLGL: ERL Group Leader Ilan (5143) or Dmitry (5136)

CHIPMUNKS

Name	Location	Interlock [mrem/hr]	Alarm (mrem/hr)
NMO170	North Labyrinth	50	40
NMO171	North Gate	50	40
NMO172	1 MW Waveguide port	50	40
NMO173	50 KW waveguide area	50	40
NMO174	West cryo pipe exit	50	40
NMO175	South Gate	50	40
NMO176	South Labyrinth	50	40
NMO177	Internal to ERL 1	-	-
NMO178	Internal for ERL 2	-	-

C-AD

Radiation

Safety Minutes of RSC Subcommittee of October 27, 2014

Committee

Issued: October 29, 2014

Subject: BLIP Penetration Shielding and ERL Shielding Changes

Present: : D. Beavis, D. Raparia, L. Mausner, C. Theisen D. Kayran, E. T. Lessard, C. Taylor, C. Montag, L. Evers, S. Pontieri, M. Fedurin, and D. Phillips

The meeting was called to review the shielding design for penetrations from the BLIP beam transport to the control room and improvements to the shielding for the ERL enclosure.

BLIP Penetrations

The beam transport system is being modified for the installation of the beam raster system. This system will allow for higher beam intensities on the BLIP targets by painting the beam on the target which will create a more uniform exposure. The existing penetrations have been plugged with steel. The plan is to remove the plugs and use the penetrations for cables for magnets and instrumentation.

The design of the shielding[1] that would replace the plugs has six inches of steel and six inches of poly over the 10 inch diameter penetration. The potential dose rate one foot above the shield is expected to be 40 mrem/hr if 100% of the beam was lost near the penetration and the machine was operating at the ASE limit $5.5*10^{18}$ protons per hour. Footnote1notes that the ASE limit is a factor of two higher than the machine can operate and that other active controls and monitoring are expected to keep beam losses substantially lower than the maximum possible beam current and for any substantial duration. The dose in a beam fault is therefore expected to be far lower than 40 mrem.

The shield could have been placed below the floor level but it was decided that to provide for maximum possible use of the penetration area for cables that the shield would be placed above the concrete floor. The poly provides a high density of hydrogen atoms which are effective is reducing the neutron dose. About 80% of the dose above the shield is from neutrons with energies above 20 MeV. This suggests that if the shield is changed that more steel should be added. It was noted that the present calculation uses poly and not borated poly. It borated poly

[1] D. Beavis, "BLIP Penetrations from the BLIP Spur to the Control Room, Oct. 24, 2014; http://www.c-ad.bnl.gov/esfd/RSC/Memos/10_24_14_BLIP.pdf

can be obtained easily and in time for the shield completion than it will help reduce the low energy neutron dose.

The shield design was recommended for approval with the following recommendations:

- **Place a monitor TLD over the shield to monitor the dose. (CK-BLIP-Dec. 1, 2014-925)**
- **The Linac LP will conduct a beam fault study at 0.1% of beam. (CK-BLIP-Dec. 1, 2014-926**
- **The LE will ensure that configuration control of the shield will follow the requirements of OPM 9.1.12. (CK-BLIP-Dec. 1, 2014-927)**

ERL Shielding Improvements

Shielding changes were made to the ERL enclosure to reduce the potential exposure due to beam faults aligned with shield block seams and the chronic dose from the beam dump out the shielding roof. Seven distinct changes to the shielding were made and the potential dose during beam faults was provided in a memorandum[2].

Some steel bars that cover the roof seams are bridged across from adjacent steel bars. This leaves a gap between the roof seam and the steel shielding. This method was chosen in some cases to reduce the labor in preparing the shielding. It is noted that the dose in short events appears to be large. However, it is very unlikely that these vents can last for any fraction of a second at full beam power.

There is no access to the building roof over ERL if ERL is operating. The building roof posting will be reviewed and discussed with RCD to see if it is appropriate.

It was noted that a few of the calculations for ERL will be checked to provide independent analysis.

The only recommendation made was for one or two monitor TLDs be place on the building roof. (CK-ERL-Dec. 1, 2014-927)

CC:

RSC minutes file
RSC
Attendees
S. Smith
I. Ben-Zvi
P. Bergh

[2] D. Beavis, "ERL Shielding Changes",Oct. 24, 2014; http://www.c-ad.bnl.gov/esfd/RSC/Memos/10_24_14_ERL.pdf

Prepared by: Wencan Xu

Date: Oct. 29, 2014

Reviewed by: Dana Beavis

Date: 10/29/14

Approved by: Thomas Roser

T. Roser

Date: 10/30/14

ERL RSC Check-Off List for Low Power Beam Testing of the ERL SRF electron gun

Completion of this ERL RSC Check-Off List is a prerequisite for beam testing.

Upon completion of this check-off list in the MCR, the ERL cold emission testing (CET) of the SRF electron gun may commence.

1. _____ **(LP)** **RSC LOTO has been applied to prevent the 1 MW klystron from being energized. This or equivalent must remain in place until the check-off list is complete.**

2. _____ **(LP)** **RSC LOTO has been applied to prevent excitation of the gun cathode by the laser.**

3. _____ **(LE)** **First dipole after gun is RS LOTOed off. This must remain LOTOed off until fault studies are complete and reviewed for the straight section.**

4. _____ **(IG)** **Slits after gun in first beam transport sections are RS LOTOed fully open.**

5. _____ (LP) C-AD OPM 2.5.6 must be followed for the low power test.

6. _____ (IG) Chipmunk operation verified.

7. _____ (IG) Chipmunk alarm and interlock levels checked against table below.

8. _____ (LE) ERL block house shielding and barriers inspected and acceptable low power beam operations

9. DB (RSCC) ERL shielding improvements reviewed and inspected.

10. _____ (LE) Barriers are in place at both ends of the trench and posted.

11. _____ (LE) The ladder at the power supply house has a locked barrier and is posted.

12. _____ (LE) Access panel on side of electronic room is locked closed.

13. _____ (RCD) Access panel posted.

14. _____ (RCD) Post area between West wall of the ERL and building wall as access prohibited without an RCT.

15. _____ (ACG) Chipmunks have interlock function checked. (See attached list).

16. _____ (RCD) Entrance gates to the ERL block house posted.

17. _____ (RCD) Areas around the entrance gates roped off and posted not to enter without HP for the beam tests.

18. DB (RSCC) The support building against ERL shielding is satisfactory for access without an RCT escort.

19. _____ (LE) Area surrounding ERL is posted as no ladders/no climbing.

20. _____ (ACG) All bypasses or temporary jumpers in place have been discussed with RSCC.

21. _____(ACG) ODH interlocks certified.

22. DB (RSCC) ERL shielding has been examined and found acceptable.

23. DB (RSCC) Building roof requirements given to LE and RCD.

24. DB (RSCC) Radiation survey precautions and details given to RCD.

25. _____(RCD) Building roof posted as needed.

26. _____ (RCD) Post area between West wall of the ERL and building wall as access prohibited without a RCT.

27. _____(CEE) Conditions from review of Laser and ICT for beam intensity completed, as per review memo.

28. _____ (LP) Blockhouse and west fenced areas have been verified as swept.

29. _____ (LP) A procedure provides operators instruction for responding to ICT interlocks.

30. _____(LP) Work Control Coordinator (WCC) will be informed of the operations of the ERL gun with beam so that OPM 4.99 and 4.99a can be followed.

31. _____ (LP) ERL ready for low power test.

32. _____ (OC) List completion verified by on-duty operations coordinator.

When the list above is complete then the RS LOTO of the laser and Klystron can be removed so that low power beam testing can begin to the first Faraday cup.

When the SRF gun is ready to potentially generate beam, the on-duty RCT needs to be in the area to conduct surveys of the shielding and penetrations.

RCD	Radiological Control Division: P. Bergh or designee
LE	Liaison Engineer: D. Phillips or designee
LP	Liaison Physicist: D. Kayran or designee
MCRGL	MCR Group Leader: P. Ingrassia or designee
RSCC	Radiation Safety Committee Chairperson: D. Beavis or designee
OC	Operations Coordinator
ACG	Access Control Group: J. Reich or designee
RCT	Radiation Control Technician
IG	Instrumentation Group: M. Minty or designee
CEE	Chief Electrical Engineer: J. Sandberg or designee
RGDC	C-AD RGD Custodian: A. Etkin or designee
WCC	Work Control Coordinator :F. Kobasiuk or designee

CHIPMUNKS			
Name	Location	Interlock [mrem/hr]	Alarm [mrem/hr]
NMO170	North Labyrinth	2.5	1
NMO171	North Gate	2.5	1
NMO172	1 MW Waveguide port	2.5	1
NMO173	50 kW Waveguide area	2.5	1
NMO174	West cryo pipe exit	2.5	1
NMO175	South Gate	2.5	1
NMO176	South Labyrinth	2.5	1
NMO177	Internal to ERL1	-	-
NMO178	Internal to ERL 2	-	-
NMO181	Gun power limit	20	10
NMO182	Power limit gun and dump	20	10

Laboratory Environment Safety and Health Committee
Cryogenic Safety Subcommittee

MINUTES OF MEETING 06-06

May 18, 2006

Final

Committee Members Present	Committee Members Absent
W. Glenn	R. Alforque
S. Kane	P. Mortazavi
E. Lessard (Chairperson)	
M. Rehak	
A. Sidi Yekhlef	
R. Travis* (Secretary)	
K. C. Wu	
(* non-voting)	

Visitors
D. Holmes
D. Lederle
A. Nicoletti
D. Phillips
T. Tallerico
R. Than
J. Tuozzolo

Agenda:

1. **Energy Recovery Linac Cryo System Review**

Minutes of Meeting: Appended on pages 2 through 5.

ESH COMMITTEE MINUTES APPROVED:

Signature on File	**06/20/06**	**Signature on File**	**06/20/06**
E. Lessard	**Date**	**J. Tarpinian**	**Date**
LESHC Chairperson		**ESH&Q ALD**	

Formatted: Font color: Auto

Chairperson E. Lessard called this meeting of the Laboratory Environmental Safety and Health Committee (LESHC) to order on May 18, 2006 at 2:10 p.m.

1. **Energy Recovery Linac Cryo System Review:** A. Nicoletti presented the proposed Cryogenic System for the Energy Recovery Linac [1].
   1.1. Mr. Nicoletti and other attendees made the following points during the course of the presentation and in response to specific Committee questions:
      1.1.1. The 50 MeV Energy Recovery Linac (ERL) is a stand-alone electron accelerator that is slated for Building 912. Operation is planned for the 2009 timeframe.
         1.1.1.1. In preparation for operations, the ERL will be subject to the reviews as prescribed by the SBMS Accelerator Safety Subject Area.
         1.1.1.2. The LESHC will review the Safety Assessment Document and the Accelerator Safety Envelope.
      1.1.2. Several components will be tested in the immediate future, in support of ERL operations. These are:
         1.1.2.1. The 5 Cell Cavity, which is scheduled for cool down in about 6 months.
         1.1.2.2. The 700 MHz Superconducting Radiofrequency (SCRF) Gun is scheduled to operate in about 18 months.
         1.1.2.3. The 1.3 GHz SCRF Gun, formerly located in Bldg. 939, will be used in parallel with the 5 Cell Cavity at some point in the future.
      1.1.3. Although a refrigerator will eventually be installed, near term operation of these components will require LHe supply dewars.
         1.1.3.1. Until the refrigerator is installed, only one of these three components will be operating cold at any time.
      1.1.4. This review addresses the 5 Cell Cavity. The other components will be the subject of separate LESHC reviews.
      1.1.5. A 500 liter LHe dewar is used to fill the 5 Cell Cavity. It is only connected during filling. The total LHe inventory for the cavity and ballast tank is 750 liters. Another 250 liter LHe dewar supplies the 5k heat shield. Liquid nitrogen (LN2) for the LN2 heat shield is supplied by a buggy located outside the building.
         1.1.5.1. The 250 liter dewar is wheeled into position from the exterior of the building. This dewar lasts ~ 16 hours. For a typical run, the dewar will be replaced once.
      1.1.6. Relief valves are provided to protect components and all trapped volumes from over pressurization.
         1.1.6.1. The relief valves and rupture disks are located on the protected equipment. With the exception of one small volume, discharges are vented outside the block house.
         1.1.6.2. From an over pressurization perspective, the critical components are the convolutions in the 5 Cell Cavity itself.

[1] The presentations, these Minutes and the referenced documents herein are posted at: http://www.rhichome.bnl.gov/AGS/Accel/SND/laboratory_environemnt,_safety_and_health_committee.htm.)

Formatted: Font color: Auto

1.1.6.2.1. Relief devices are sized for losses of insulating vacuum and beam tube vacuum.

1.1.6.2.2. The relief valves will be set (at ~ 13 psi) to protect this component. A back up rupture disk (~15 psi) is also provided. From an operational perspective, C-AD acknowledged that both devices would probably actuate, given the similar relief setpoints.

1.1.6.3. C-AD presented a "Pressure Ratings" Table comparing component Maximum Allowable Working Pressures (MAWP) with relief valve setpoints.

1.1.6.3.1. The Committee noted that the Code requirement is that relief devices limit pressure rise to 110% of MAWP under the worst conditions. C-AD was requested to verify the relief valves meet the Code requirement and enter this information into the project documentation.

1.1.6.3.2. C-AD was also requested to provide the associated volume that each relief valve protects.

1.1.7. One failure mode, "RF Energy dumped into the Cryo System", was discussed at length. Although the 25 Kw RF energy is continuous, the relief capacity is based on only a small energy release, on the order of joules. It could not be determined at the meeting how much energy is actually stored in the cavity. Committee Member W. Glenn agreed to clarify this potential issue.

1.1.7.1. **5/22/06 ADDENDUM:** W. Glenn discussed the RF Cavity stored energy question with I. Ben-Zvi. The large power of the RF drive is mostly wasted in a dump as a method to broaden the frequency response. The stored energy in the RF Cavity is indeed only about 40 joules and thus is not relevant to sizing the relief valves. **This Action is Complete.**

1.1.8. The ballast tank is mounted above the 5 Cell Cavity. It provides extended run times at 2k. The stress analyses for the Support Stand and the Lifting Lugs were discussed.

1.1.8.1. The design Ballast Tank Support Stand has been modified and the finite element analysis (FEA) that was provided to the Committee does not model these changes. C-AD agreed to provide the revised FEA to the Committee.

1.1.8.2. The "Lifting Lugs, Ballast Tank Assembly" ANSYS analysis conservatively assumes the total weight of the tank is borne by one of four lugs and calculates a 17.8 ksi maximum stress in the lug. The Committee noted the ASME Code addresses lifting lugs for pressure vessels and requested a comparison of the ANSYS results to ASME allowables.

1.1.8.3. The vendor stress calculations (e.g., for the lifting lugs) has been independently checked. C-AD agreed to document this review with a memo.

1.1.9. The 5 Cell Cavity FEA was presented. The cavity is evacuated and contained in a pressurized liquid helium vessel. The ANSYS calculation

Formatted: Font color: Auto

assumed 44.1 psid acting externally on the cavity and resulted in a predicted stress greater than yield.

1.1.9.1. Based on the FEA and a project-established allowable niobium yield stress of 2/3 of yield, the LHe pressure will be limited to ~ 26 psid across the Cavity, or ~ 11.3 psig. (Note: The relief valve setpoints are preliminary, nominal values.)

1.1.9.2. The Cavity geometry resembles a bellows. The Committee Members noted that "squirm" is relevant for internally pressurized bellows, as opposed to the externally pressurized configuration of this cavity. With regard to buckling, the cavity is well supported with three radial straps and is extremely stiff as pressure induced changes in Cavity geometry will impact RF operation.

1.1.9.3. The applicability of the ASME B&PV Code to the 5 Cell Cavity was discussed. The Committee requested C-AD to determine if the Cavity material is addressed in the Code.

1.1.9.4. There was some concern about the number of 5 Cell Cavity cool down cycles and the potential for fatigue failure. The Committee noted that the Cavity will be kept continuously cold when the helium refrigerator is added to the system. C-AD was requested to determine the maximum number of cool down cycles that is allowable.

1.1.10. The Oxygen Deficiency Analyses for the Block House and the Pump Room was presented.

1.1.10.1. Until the refrigerator is installed, only one of the three components (5 Cell Cavity, 700 MHz SCRF Gun or the 1.3 GHz Gun) will be cold at any one time.

1.1.10.2. The ODH information presented was essentially a summary of results. Detailed information was not available at the meeting.

1.1.10.3. C-AD was requested to provide the underlying ODH calculations. Committee Members Woody Glenn and K.C. Wu agreed to review the calculations.

1.1.11. The 700 MHz and the 1.3 GHz Superconducting Radiofrequency (SCRF) Guns were briefly discussed during the course of the presentation. These components will be presented for LESHC review prior to component cooldown.

1.1.11.1. The 700 MHz Gun is still in the early phases of the design process.

1.1.11.2. The 1.3 GHz Gun was formerly located in Building 939. The Gun is unmodified, but the associated RF cryostat has been changed to a top loading design.

1.1.11.3. The RF cryostat has been designed to the ASME Code. There was considerable discussion among Committee Members about the need to ASME stamp this vessel, and whether the industry has the credentials/capability to do this.

1.1.11.4. In support of a future LESHC review of the 1.3 GHz SCRF Gun, C-AD was requested to determine if the RF Cryostat is required to meet the ASME Code, i.e., minimum dimensions and/or volume are exceeded. See also 1.3 (below) for related discussion.

Formatted: Font color: Auto

1.2. The following motion was crafted by the Committee:

1.2.1. The Committee approves the cryogenic testing of the 5 Cell Cavity in the Building 912 Blockhouse subject to the following conditions:

1.2.1.1. Develop and maintain a Documentation File for this project.

1.2.1.2. Verify the relief valves meet the Code requirement and enter this information into the project documentation. (See 1.1.6.3 above.)

1.2.1.3. Provide (for Committee information) the associated volume that each relief valve protects. (See 1.1.6.3.)

1.2.1.4. Provide the Finite Elements Analysis for the revised ERL Ballast Tank Support Structure to the Committee. (See 1.1.8.)

1.2.1.5. Provide a comparison of the ANSYS results to ASME allowables for the Ballast Tank Lifting Lugs. (See 1.1.8.)

1.2.1.6. Provide a memo certifying that the vendor calculations were checked by C-AD. (See 1.1.8.)

1.2.1.7. Determine if the 5 Cell Cavity material is addressed in the ASME B&PV Code. (See 1.1.9.)

1.2.1.8. Determine the maximum number of cool down cycles for the 5 Cell Cavity that is allowable. (See 1.1.9.)

1.2.1.9. Provide the detailed ODH calculations for Committee review. (See 1.1.10.)

1.2.1.10. Provide 5 Cell Cavity Cryogenic operating procedures (e.g., system cool down, pump operations, dewar swapping, etc.) for Committee review.

1.2.2. W. Glenn made a recommendation for approval of the Motion.

1.2.3. Seconded by S. Kane.

1.2.4. The motions were approved by vote of 6 in favor and none opposed.

1.3. The impending regulation of DOE contractors under 10CFR851, which incorporates American Society of Mechanical Engineers (ASME) Boiler and Pressure Vessel Code (2004), sections I through section XII including applicable Code Cases, prompted much Committee discussion throughout this meeting. The Committee debated the applicability of the ASME Boiler and Pressure Vessel Code requirements to the Five Cell Cavity and the Ballast Tank. This is a significant concern, as it potentially affects most of the cryogenic equipment on site. The Committee Secretary will schedule a separate meeting to: examine the requirements of 10CFR851, determine applicability to cryogenic equipment and advise Laboratory Management of potential areas of non compliance.

2. The Meeting was adjourned at 4:08 p.m.

ODH Analysis

Summary of Release Rates into Block House	Operating Pressure-atm	Release rate g/sec	Release rate scfh
Failure of Cooldown Line Bayonet - 5 cell cavity	1.7	60	46000
Failuire of High pressure dewar bayonet	3	80	61500
Failure of cooldown line to 939 Gun	1.7	105	81000
Rupture of N2 line	1.70	160	20000

Helium volume associated with ERL(liters)

	5 cell	SCRF Gun	919 Gun
Cryomodule	*750**	*170**	*61**
HP dewar	*250**	*250**	**0**
LP dewar	**500**	**500**	*500**
	1500	**920**	**561**

* *Volume Located in Block House*

Liquid Nitrogen		Liters	
5 Cell Cavity (incl ballast Tank)		12.4	
	1.3 GHX Gun	<10	Est
	700MHZ Gun	<10	Est

Maximum Cryogen In Block House At any given time

1000 Liters of Liquid Helium

<40 liters of LN2

ERL Block House Fatality Rate and ODH Class Determination

- Φ Total without Fan (F = 1) = 1.43E-3
- Φ Total for Fan (F = 1) = 1.20E-5
- Φ Total for System Fault x Fan Fault (F = 1) = 1.72E-8
- 1.72E-8 < 1E-7 therefore ODH Class 0

Block House Release with Exhaust Fan On

- From SBMS “Oxygen Concentration in Ventilated Spaces” Case B: Ventilation fan drawing from the confined volume with the ventilation rate greater than the spill rate.
- Q (ventilation Rate) = 12,000 CFM
- R (Spill Rate) = 1,344 CFM
- V (Volume) = 24,000 cubic ft

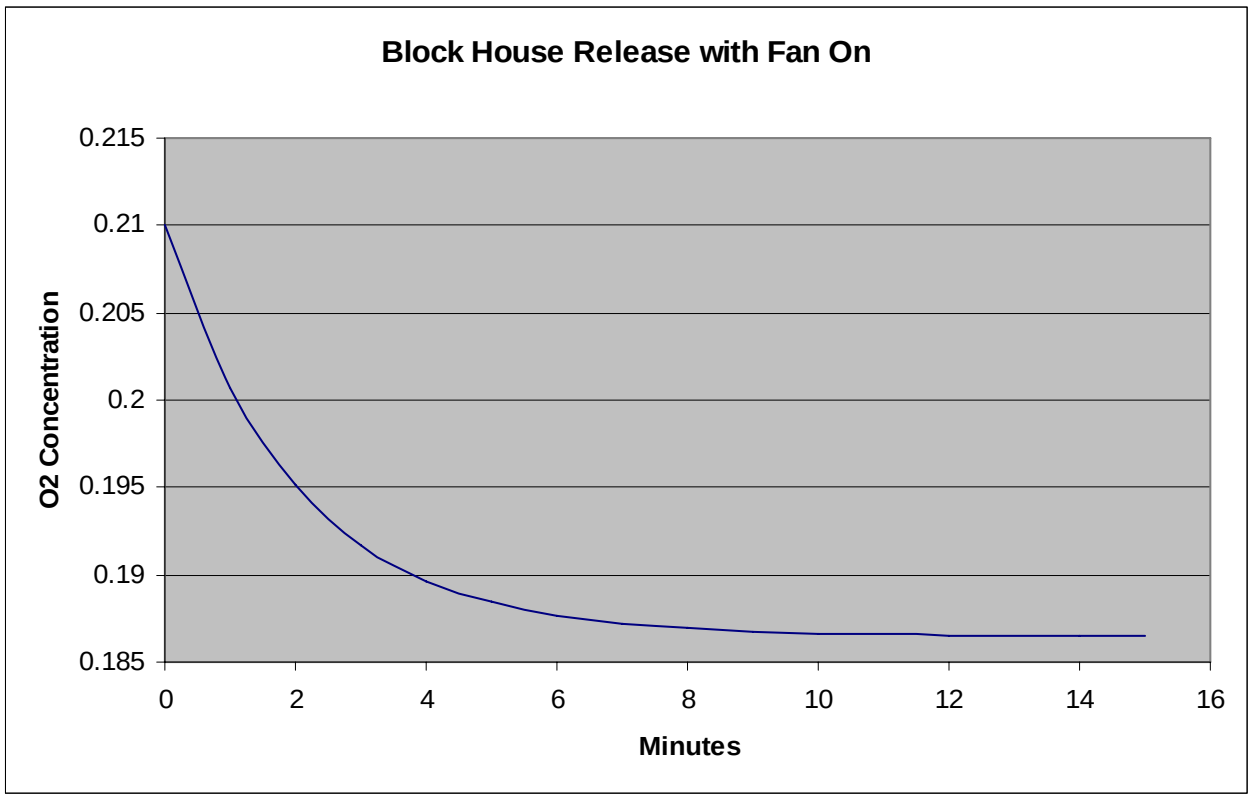

Block House % O2 For ODH Class 0 without Exhaust Fan

- Calculate PO2 for Φ = 1E-7 without exhaust fan
- Φ(ODH 0) = P(w/o fan)*F(ODH O)
- P(w/o fan) = 1.43E-3
- F(ODH 0) = 1E-7/1.43E-3 = 6.99E-5
- From SBMS: F = 10**(6.5-(PO2/10))
- PO2 = 107 mm Hg = 14.0% O2

Block House Release with Exhaust Fan Off

- From SBMS "Oxygen Concentration in Ventilated Spaces" Case C: Ventilation fan drawing from the confined volume with the ventilation rate less than or equal to the spill rate.
- Q (ventilation Rate) = 0 CFM
- R (Spill Rate) = 1,344 CFM
- V (Volume) = 24,000 cubic ft

Time	% O2
0m 00s	21.0%
1m 20s	19.5%
2m 45s	18.0%
7m 15s	14.0%

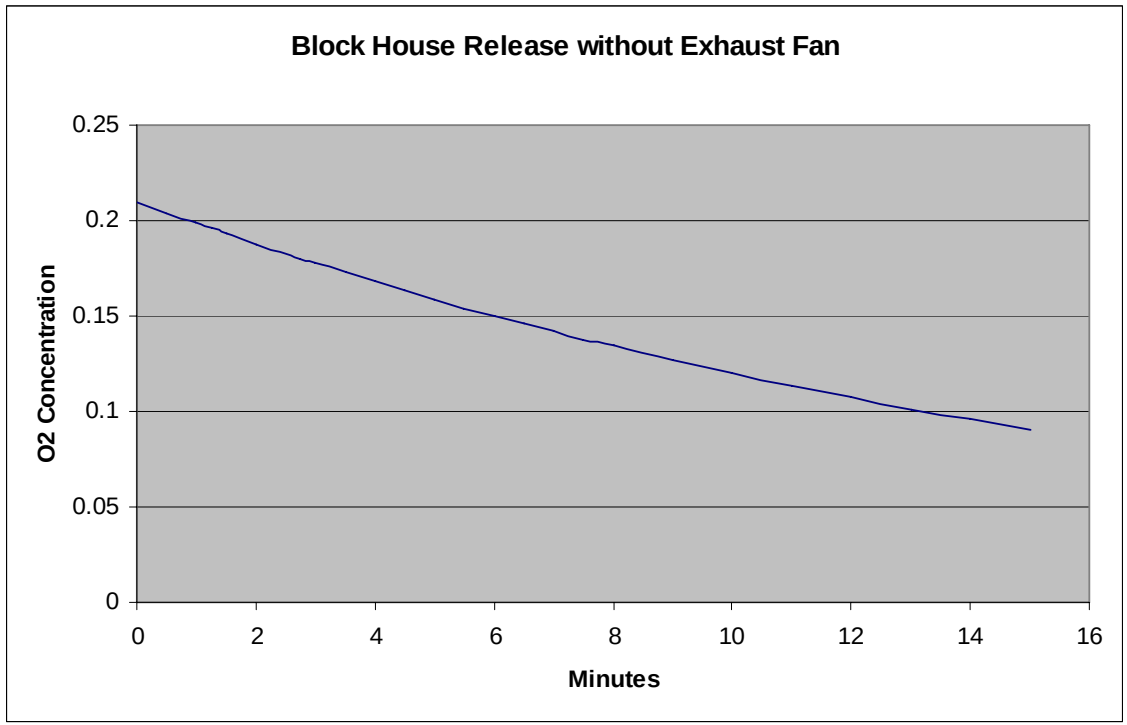

Pump Room ODH

- From SBMS “Oxygen Concentration in Ventilated Spaces” Case C: Ventilation fan drawing from the confined volume with the ventilation rate less than or equal to the spill rate.
- Q (ventilation Rate) = 0 CFM
- R (Spill Rate) = 90 CFM
- V (Volume) = 11980 cubic ft

Time	% O2
0m	21.0%
10m	19.5%
20m	18.0%
180m	5.4%

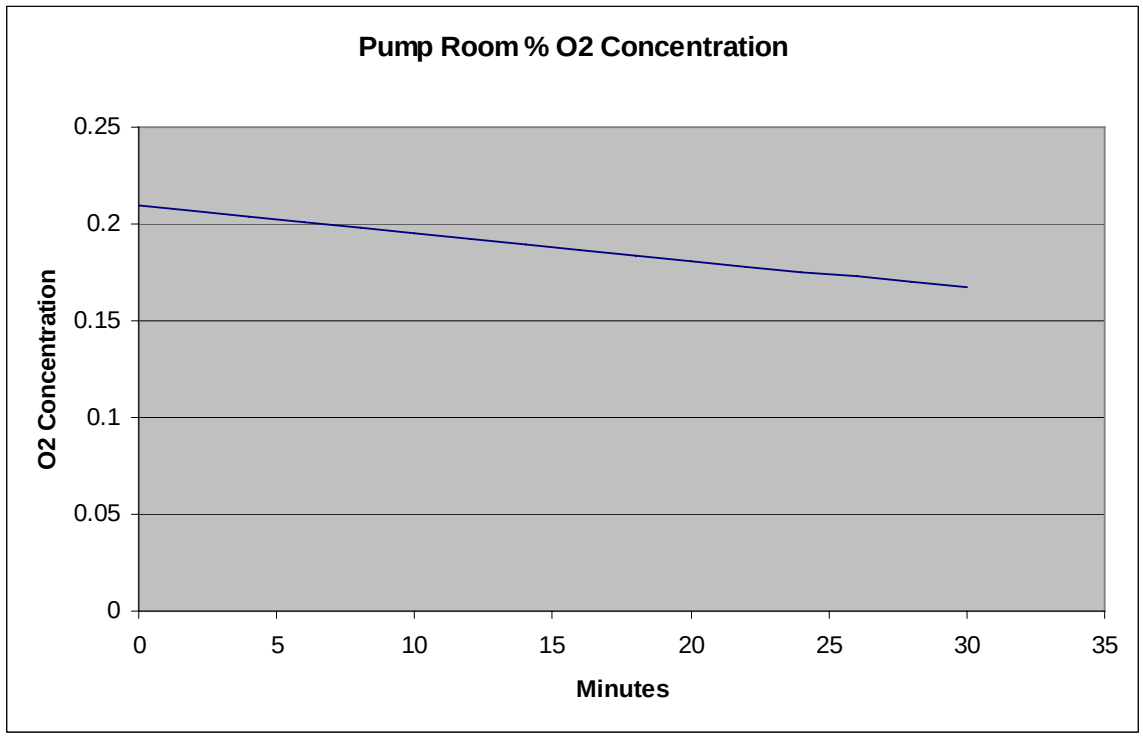

Project

Author
Kevin Rogstad

Subject
Mounting Support Assembly

Prepared For
BrookHaven National Laboratory

Project Created
Wednesday, January 11, 2006 at 2:25:16 PM

Project Last Modified
Wednesday, January 11, 2006 at 2:25:16 PM

Report Created
Wednesday, January 11, 2006 at 3:26:11 PM

Software Used
ANSYS 10.0

Database
Document1.dsdb

---

1. Summary

This report documents design and analysis information created and maintained using the ANSYS® engineering software program. Each scenario listed below represents one complete engineering simulation.

Scenario 1

- Based on the Inventor assembly *"\\Phpk009\Company\Engineering\Inventor Work Directory\Work Orders\05-1312\ANSYS TESTING FILE.iam"*.
- Considered the effect of body-to-body contact, structural loads and structural supports.
- Calculated safety factors and margins based on maximum equivalent stress and maximum shear stress along with structural results.
- No convergence criteria defined.
- No alert criteria defined.
- See Scenario 1 below for supporting details and Appendix A1 for corresponding figures.

---

2. Introduction

The ANSYS CAE (Computer-Aided Engineering) software program was used in conjunction with 3D CAD (Computer-Aided Design) solid geometry to simulate the behavior of mechanical bodies under thermal/structural loading conditions. ANSYS automated FEA (Finite Element Analysis) technologies from ANSYS, Inc. to generate the results listed in this report.

Each scenario presented below represents one complete engineering simulation. The definition of a simulation includes known factors about a design such as material properties per body, contact behavior between bodies (in an assembly), and types and magnitudes of loading conditions. The results of a simulation provide insight into how the bodies may perform and how the design might be improved. Multiple scenarios allow comparison of results given different loading conditions, materials or geometric configurations.

Convergence and alert criteria may be defined for any of the results and can serve as guides for evaluating the quality of calculated results and the acceptability of values in the context of known design requirements.

- *Solution history* provides a means of assessing the quality of results by examining how values change during successive iterations of solution refinement. *Convergence criteria* sets a specific limit on the allowable change in a result between iterations. A result meeting this criteria is said to be "converged".
- *Alert criteria* define "allowable" ranges for result values. Alert ranges typically represent known aspects of the design specification.

All values are presented in the *"U.S. Customary (in, lbm, lbf, °F, s, V, A)"* unit system.

Notice

Do not accept or reject a design based solely on the data presented in this report. Evaluate designs by considering this information in conjunction with experimental test data and the practical experience of design engineers and analysts. A quality approach to engineering design usually mandates physical testing as the final means of validating structural integrity to a measured precision.

---

3. Scenario 1

3.1. "Model"

"Model" obtains geometry from the Inventor assembly *"\\Phpk009\Company\Engineering\Inventor Work Directory\Work Orders\05-1312\ANSYS TESTING FILE.iam"*.

- The bounding box for all positioned bodies in the model measures 44.63 by 44.63 by 98.02 in along the global x, y and z axes, respectively.
- The model has a total mass of 595.9 lbm.
- The model has a total volume of 2,126.59 in³.

Table 3.1.1. Bodies

Name	Material	Nonlinear Material Effects	Bounding Box(in)	Mass (lbm)	Volume (in³)	Nodes	Elements
"05-1312-2000-1:1"	*"Stainless Steel"*	Yes	32.0, 32.0, 84.0	421.37	1,503.76	46427	23979
"05-1312-2008:2"	*"Stainless Steel"*	Yes	0.25, 2.81, 3.75	0.42	1.5	264	27
"05-1312-2008:1"	*"Stainless Steel"*	Yes	0.25, 2.81, 3.75	0.42	1.5	264	27
"05-1312-2008:3"	*"Stainless Steel"*	Yes	0.25, 2.81, 3.75	0.42	1.5	266	28
"05-1312-2008:4"	*"Stainless Steel"*	Yes	0.25, 2.81, 3.75	0.42	1.5	292	31
"05-1312-2005:1"	*"Stainless Steel"*	Yes	26.0, 6.51, 0.5	8.52	30.4	321	119
"05-1312-2004:1"	*"Stainless Steel"*	Yes	28.0, 0.5, 4.0	15.52	55.39	734	89
"05-1312-2005:1 (2)"	*"Stainless Steel"*	Yes	26.0, 6.51, 0.5	8.52	30.4	321	119
"05-1312-2004:1 (2)"	*"Stainless Steel"*	Yes	28.0, 0.5, 4.0	15.52	55.39	734	89
"BACK-UP RING 32OD:1"	*"Stainless Steel"*	Yes	31.62, 31.62, 1.0	5.19	18.52	11664	1424
"BACK-UP RING 32OD:2"	*"Stainless Steel"*	Yes	31.62, 31.62, 1.0	5.19	18.52	11664	1424
"DISH FLANGED HEAD 32 OD:1"	*"Stainless Steel"*	Yes	44.63, 44.63, 7.01	57.2	204.12	7630	3590
"DISH FLANGED HEAD 32 OD:2"	*"Stainless Steel"*	Yes	44.57, 44.57, 7.01	57.2	204.12	7748	3668

3.1.1. Contact

- *"Contact"* uses a tolerance of 0.0 for automatic detection.

Table 3.1.1.1. Contact Conditions

Name	Type	Associated Bodies	Scope	Normal Stiffness	Scope Mode	Behavior	Update Stiffness	Formulation	Therma Conduct
"Contact Region"	Bonded	*"05-1312-2000-1:1"* and *"05-1312-2008:2"*	Face, Face	Program Controlled	Automatic	Symmetric	Never	Pure Penalty	Program Controlle
"Contact Region 2"	Bonded	*"05-1312-2000-1:1"* and *"05-1312-2008:1"*	Face, Face	Program Controlled	Automatic	Symmetric	Never	Pure Penalty	Program Controlle
"Contact Region 3"	Bonded	*"05-1312-2000-1:1"* and *"05-1312-2008:3"*	Face, Face	Program Controlled	Automatic	Symmetric	Never	Pure Penalty	Program Controlle
"Contact Region 4"	Bonded	*"05-1312-2000-1:1"* and *"05-1312-2008:4"*	Face, Face	Program Controlled	Automatic	Symmetric	Never	Pure Penalty	Program Controlle
"Contact Region 5"	Bonded	*"05-1312-2000-1:1"* and *"05-1312-2005:1"*	Face, Face	Program Controlled	Automatic	Symmetric	Never	Pure Penalty	Program Controlle
"Contact Region 6"	Bonded	*"05-1312-2000-1:1"* and *"05-1312-2005:1 (2)"*	Face, Face	Program Controlled	Automatic	Symmetric	Never	Pure Penalty	Program Controlle
"Contact Region 7"	Bonded	*"05-1312-2000-1:1"* and *"BACK-UP RING 32OD:1"*	Face, Face	Program Controlled	Automatic	Symmetric	Never	Pure Penalty	Program Controlle
"Contact Region 8"	Bonded	*"05-1312-2000-1:1"* and *"BACK-UP RING 32OD:2"*	Face, Face	Program Controlled	Automatic	Symmetric	Never	Pure Penalty	Program Controlle
"Contact Region 9"	Bonded	*"05-1312-2005:1"* and *"05-1312-2004:1"*	Face, Face	Program Controlled	Automatic	Symmetric	Never	Pure Penalty	Program Controlle
"Contact Region 10"	Bonded	*"05-1312-2005:1 (2)"* and *"05-1312-2004:1 (2)"*	Face, Face	Program Controlled	Automatic	Symmetric	Never	Pure Penalty	Program Controlle
"Contact		*"BACK-UP RING 32OD:1"*							

Region 11"	Bonded	and *"DISH FLANGED HEAD 32 OD:1"*	Face, Face	Program Controlled	Automatic	Symmetric	Never	Pure Penalty	Program Controlle
"Contact Region 12"	Bonded	*"BACK-UP RING 32OD:2"* and *"DISH FLANGED HEAD 32 OD:2"*	Face, Face	Program Controlled	Automatic	Symmetric	Never	Pure Penalty	Program Controlle

3.1.2. Mesh

- *"Mesh"*, associated with *"Model"* has an overall relevance of 0.
- *"Mesh"* contains 88329 nodes and 34614 elements.

No mesh controls specified.

3.2. "Environment"

Simulation Type is set to Static

Analysis Type is set to Static Structural

"Environment" contains all loading conditions defined for *"Model"* in this scenario.

3.2.1. Structural Loading

Table 3.2.1.1. Structural Loads

Name	Type	Magnitude	Vector	Reaction Force	Reaction Force Vector	Reaction Moment	Reaction Moment Vector	Associated Bodies
"Force"	Surface Force	3,000.0 lbf	[0.0 lbf x, -3,000.0 lbf y,0.0 lbf z]	N/A	N/A	N/A	N/A	*"05-1312-2000-1:1"*

3.2.2. Structural Supports

Table 3.2.2.1. Structural Supports

Name	Type	Reaction Force	Reaction Force Vector	Reaction Moment	Reaction Moment Vector	Associated Bodies
"Fixed Support"	Fixed Surface	3,000.0 lbf	[-8.42×10^{-6} lbf x, 3,000.0 lbf y, -1.17×10^{-5} lbf z]	1,146.17 lbf·in	[1,146.12 lbf·in x, 0.99 lbf·in y, -10.78 lbf·in z]	*"05-1312-2004:1"* and *"05-1312-2004:1 (2)"*

3.3. "Solution"

Solver Type is set to Program Controlled

Weak Springs is set to Program Controlled

Large Deflection is set to Off

"Solution" contains the calculated response for *"Model"* given loading conditions defined in *"Environment"*.

- Thermal expansion calculations use a constant reference temperature of 71.6 °F for all bodies in *"Model"*. Theoretically, at a uniform temperature of 71.6 °F no strain results from thermal expansion or contraction.

3.3.1. Structural Results

Table 3.3.1.1. Values

Name	Scope	Minimum	Maximum	Minimum Occurs On	Maximum Occurs On	Alert Criteria
"Equivalent Stress"	All Bodies In *"Model"*	1.66 psi	10,986.41 psi	05-1312-2008:1	05-1312-2000-1:1	None
"Maximum Shear Stress"	All Bodies In *"Model"*	0.9 psi	6,342.75 psi	05-1312-2008:1	05-1312-2000-1:1	None
"Total Deformation"	All Bodies In *"Model"*	0.0 in	4.7×10^{-3} in	05-1312-2004:1	05-1312-2000-1:1	None

- Convergence tracking not enabled.

3.3.2. Equivalent Stress Safety

Table 3.3.2.1. Definition

Name	Stress Limit
"Stress Tool"	Yield strength per material.

Table 3.3.2.2. Results

Name	Scope	Type	Minimum	Alert Criteria
"Stress Tool"	All Bodies In *"Model"*	Safety Factor	2.73	None
"Stress Tool"	All Bodies In *"Model"*	Safety Margin	1.73	None

- Convergence tracking not enabled.

3.3.3. Shear Stress Safety

Table 3.3.3.1. Definition

Name	Shear Limit	Shear Factor
"Stress Tool 2"	Yield strength per material.	0.5

Table 3.3.3.2. Results

Name	Scope	Type	Minimum	Alert Criteria
"Stress Tool 2"	All Bodies In *"Model"*	Safety Factor	2.37	None
"Stress Tool 2"	All Bodies In *"Model"*	Safety Margin	1.37	None

- Convergence tracking not enabled.

Appendices

A1. Scenario 1 Figures

No figures to display.

A2. Definition of "Stainless Steel"

Table A2.1. *"Stainless Steel"* Constant Properties

Name	Value
Compressive Ultimate Strength	0.0 psi
Compressive Yield Strength	30,022.82 psi
Density	0.28 lbm/in^3
Poisson's Ratio	0.31
Tensile Yield Strength	30,022.82 psi
Tensile Ultimate Strength	84,992.14 psi
Young's Modulus	2.8×10^{7} psi
Thermal Expansion	9.44×10^{-6} 1/°F
Specific Heat	0.11 BTU/lbm·°F
Thermal Conductivity	2.02×10^{-4} BTU/s·in·°F
Relative Permeability	10,000.0
Resistivity	38.62 Ohm·Cir-mil/in

A3. Distributing This Report

The following table lists the files that you need to include for posting this report to an Internet or Intranet web server or for moving this report to a different location. Store all files in the same folder as the HTML page.

This report was originally generated in the folder *"C:\Documents and Settings\krogstad\Application Data\Ansys\v100\"*.

Table A3.1. Files Included In This Report

File Name	Description
"DSReport.htm"	This HTML page.
"StyleSheet.css"	The Cascading Style Sheet used to format the HTML page.
"AnsCompanyLogo.gif"	The ANSYS image displayed at the top of the title page.

Equivalent Stress

Subject: Mounting Support Assembly
Author: Kevin Rogstad
Prepared For: BrookHaven National Laboratory
Date Wednesday, January 11, 2006
Comments:

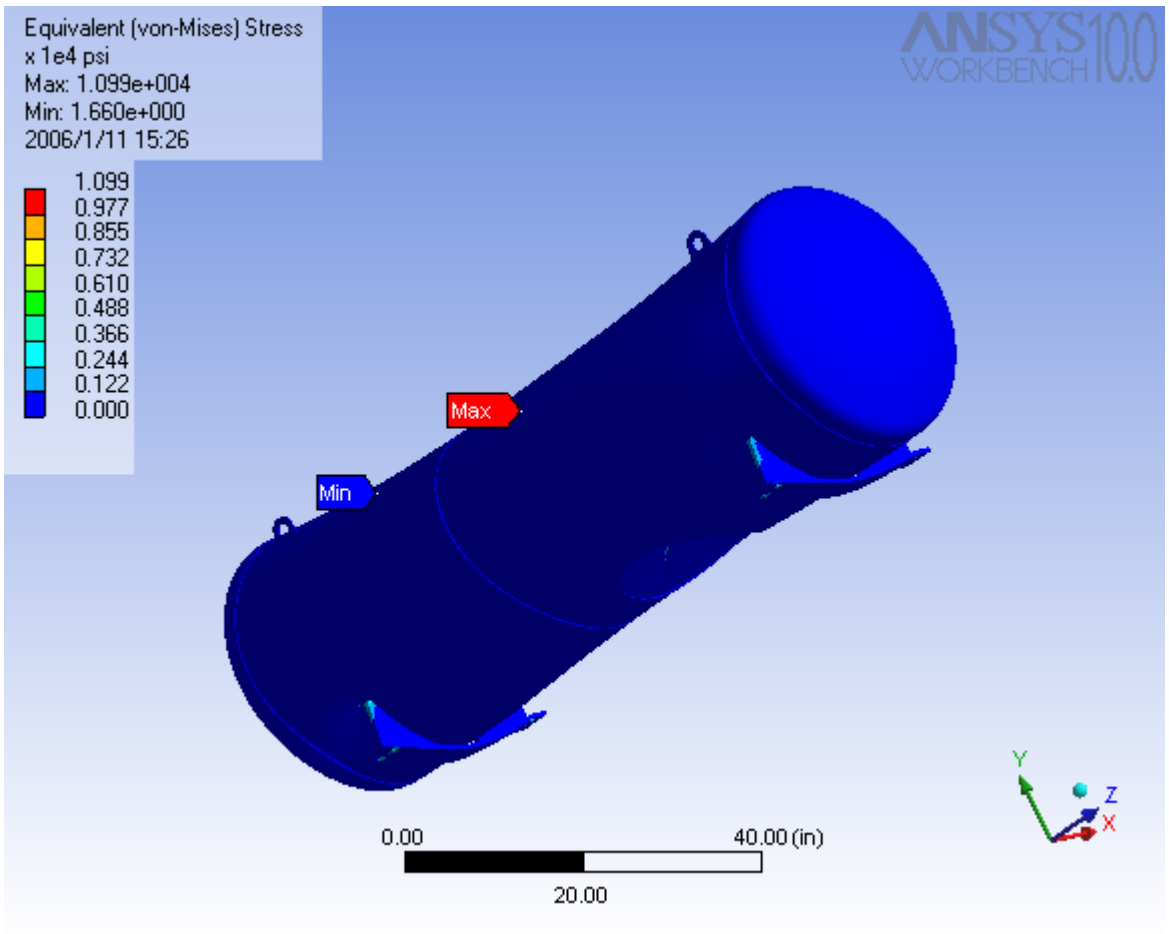

Maximum Shear Stress

Subject: Mounting Support Assembly
Author: Kevin Rogstad
Prepared For: BrookHaven National Laboratory
Date Wednesday, January 11, 2006
Comments:

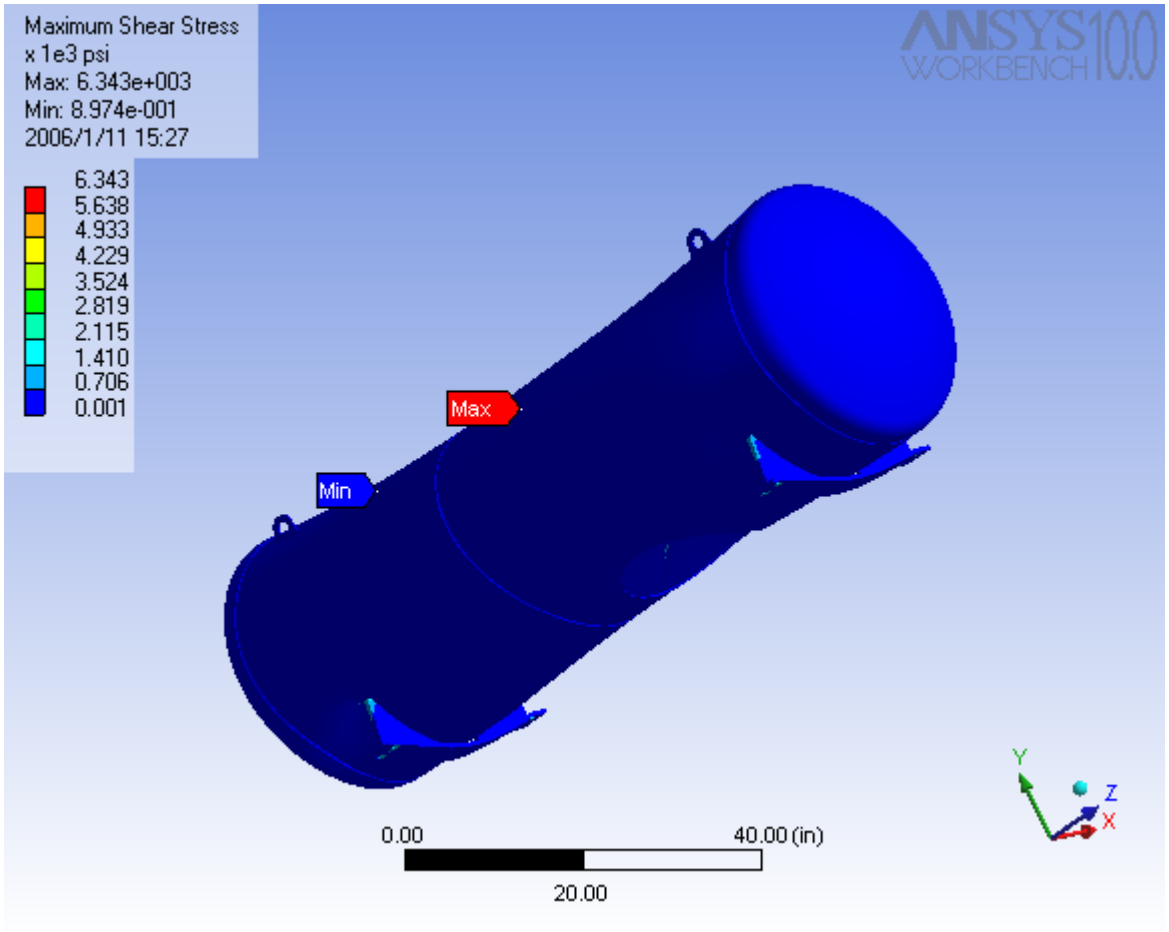

Total Deformation

Subject: Mounting Support Assembly
Author: Kevin Rogstad
Prepared For: BrookHaven National Laboratory
Date Wednesday, January 11, 2006
Comments:

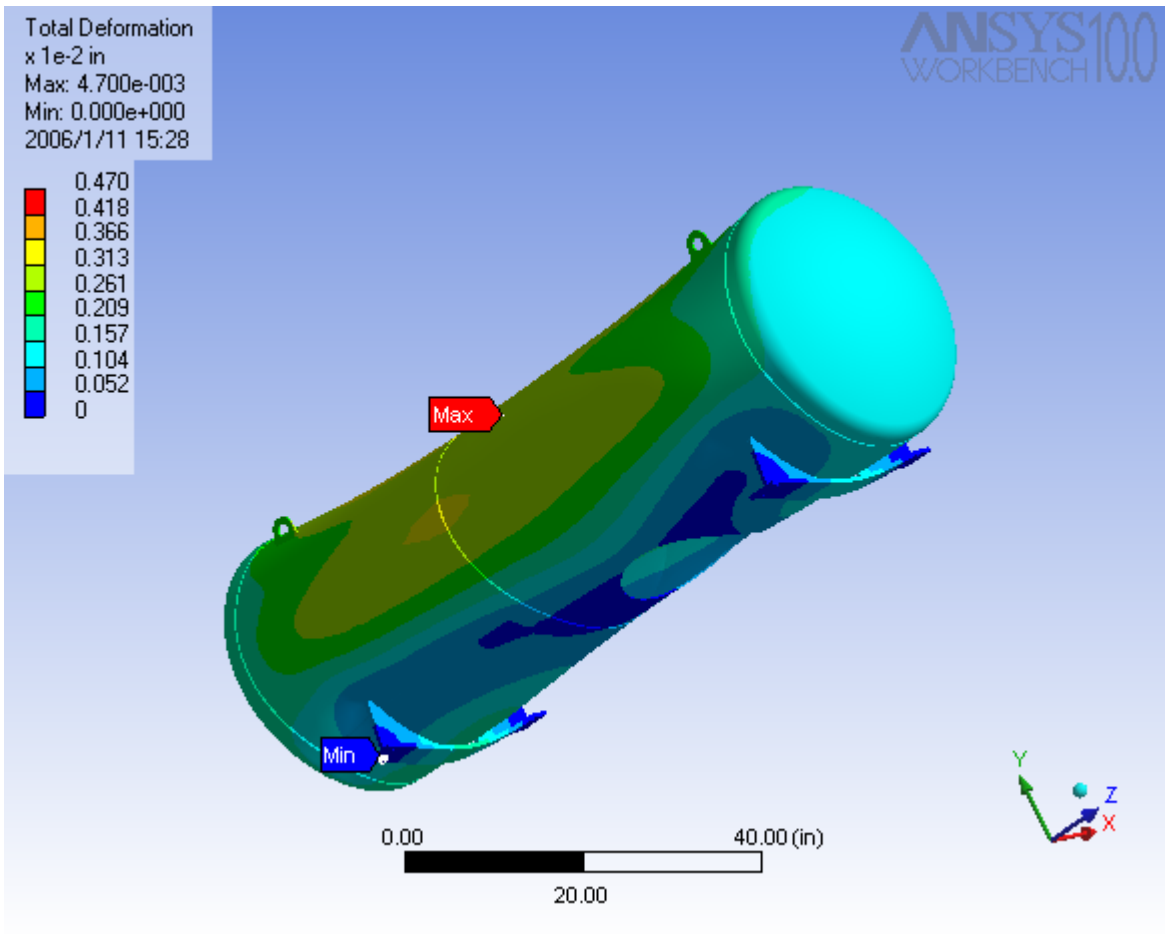

Project

Author
Kevin Rogstad

Subject
Lifting Lugs, Ballast Tank Assembly

Prepared For
BrookHaven Nation Laboratory

Project Created
Wednesday, January 11, 2006 at 10:24:19 AM

Project Last Modified
Wednesday, January 11, 2006 at 10:24:19 AM

Report Created
Wednesday, January 11, 2006 at 10:42:39 AM

Software Used
ANSYS 10.0

Database
Document1.dsdb

---

1. Summary

This report documents design and analysis information created and maintained using the ANSYS® engineering software program. Each scenario listed below represents one complete engineering simulation.

Scenario 1

- Based on the Inventor part *"\\Phpk009\Company\Engineering\Inventor Work Directory\Work Orders\05-1312\05-1312-2008.ipt"*.
- Considered the effect of structural loads and structural supports.
- Calculated safety factors and margins based on maximum equivalent stress and maximum shear stress along with structural results.
- No convergence criteria defined.
- No alert criteria defined.
- See Scenario 1 below for supporting details and Appendix A1 for corresponding figures.

---

2. Introduction

The ANSYS CAE (Computer-Aided Engineering) software program was used in conjunction with 3D CAD (Computer-Aided Design) solid geometry to simulate the behavior of mechanical bodies under thermal/structural loading conditions. ANSYS automated FEA (Finite Element Analysis) technologies from ANSYS, Inc. to generate the results listed in this report.

Each scenario presented below represents one complete engineering simulation. The definition of a simulation includes known factors about a design such as material properties per body, contact behavior between bodies (in an assembly), and types and magnitudes of loading conditions. The results of a simulation provide insight into how the bodies may perform and how the design might be improved. Multiple scenarios allow comparison of results given different loading conditions, materials or geometric configurations.

Convergence and alert criteria may be defined for any of the results and can serve as guides for evaluating the quality of calculated results and the acceptability of values in the context of known design requirements.

- *Solution history* provides a means of assessing the quality of results by examining how values change during successive iterations of solution refinement. *Convergence criteria* sets a specific limit on the allowable change in a result between iterations. A result meeting this criteria is said to be "converged".
- *Alert criteria* define "allowable" ranges for result values. Alert ranges typically represent known aspects of the design specification.

All values are presented in the *"U.S. Customary (in, lbm, lbf, °F, s, V, A)"* unit system.

Notice

Do not accept or reject a design based solely on the data presented in this report. Evaluate designs by considering this information in conjunction with experimental test data and the practical experience of design engineers and analysts. A quality approach to engineering design usually mandates physical testing as the final means of validating structural integrity to a measured precision.

---

3. Scenario 1

3.1. "Model"

"Model" obtains geometry from the Inventor part *"\\Phpk009\Company\Engineering\Inventor Work Directory\Work Orders\05-1312\05-1312-2008.ipt"*.

- The bounding box for the model measures 3.75 by 2.81 by 0.25 in along the global x, y and z axes, respectively.
- The model has a total mass of 0.42 lbm.
- The model has a total volume of 1.5 in³.

Table 3.1.1. Bodies

Name	Material	Nonlinear Material Effects	Bounding Box(in)	Mass (lbm)	Volume (in³)	Nodes	Elements
"05-1312-2008.ipt"	*"Stainless Steel"*	Yes	3.75, 2.81, 0.25	0.42	1.5	1839	282

3.1.1. Mesh

- *"Mesh"*, associated with *"Model"* has an overall relevance of 0.
- *"Mesh"* contains 1839 nodes and 282 elements.

No mesh controls specified.

3.2. "Environment"

Simulation Type is set to Static

Analysis Type is set to Static Structural

"Environment" contains all loading conditions defined for *"Model"* in this scenario.

3.2.1. Structural Loading

Table 3.2.1.1. Structural Loads

Name	Type	Magnitude	Vector	Reaction Force	Reaction Force Vector	Reaction Moment	Reaction Moment Vector
"Force SIDE"	Surface Force	500.0 lbf	[0.0 lbf x, 0.0 lbf y,-500.0 lbf z]	N/A	N/A	N/A	N/A
"Force LIFT"	Surface Force	1,500.0 lbf	[0.0 lbf x, 1,500.0 lbf y,0.0 lbf z]	N/A	N/A	N/A	N/A

3.2.2. Structural Supports

Table 3.2.2.1. Structural Supports

Name	Type	Reaction Force	Reaction Force Vector	Reaction Moment	Reaction Moment Vector
"Fixed Support"	Fixed Surface	1,581.14 lbf	[-3.06×10^{-6} lbf x, -1,500.0 lbf y, 500.0 lbf z]	556.11 lbf·in	[556.11 lbf·in x, 5.52×10^{-6} lbf·in y, -1.32×10^{-5} lbf·in z]

3.3. "Solution"

Solver Type is set to Program Controlled

Weak Springs is set to Program Controlled

Large Deflection is set to Off

"Solution" contains the calculated response for *"Model"* given loading conditions defined in *"Environment"*.

- Thermal expansion calculations use a constant reference temperature of 71.6 °F for *"05-1312-2008.ipt"*. Theoretically, at a uniform temperature of 71.6 °F no strain results from thermal expansion or contraction.

3.3.1. Structural Results

Table 3.3.1.1. Values

Name	Scope	Minimum	Maximum	Minimum Occurs On	Maximum Occurs On	Alert Criteria
"Equivalent Stress"	*"Model"*	104.52 psi	17,794.11 psi	05-1312-2008.ipt	05-1312-2008.ipt	None
"Maximum Shear Stress"	*"Model"*	59.29 psi	9,258.27 psi	05-1312-2008.ipt	05-1312-2008.ipt	None
"Total Deformation"	*"Model"*	0.0 in	1.15×10^{-2} in	05-1312-2008.ipt	05-1312-2008.ipt	None

- Convergence tracking not enabled.

3.3.2. Equivalent Stress Safety

Table 3.3.2.1. Definition

Name	Stress Limit
"Stress Tool SIDE"	Yield strength per material.

Table 3.3.2.2. Results

Name	Scope	Type	Minimum	Alert Criteria

"Stress Tool SIDE"	*"Model"*	Safety Factor	1.69	None
"Stress Tool SIDE"	*"Model"*	Safety Margin	0.69	None

- Convergence tracking not enabled.

3.3.3. Shear Stress Safety

Table 3.3.3.1. Definition

Name	Shear Limit	Shear Factor
"Stress Tool LIFT"	Yield strength per material.	0.5

Table 3.3.3.2. Results

Name	Scope	Type	Minimum	Alert Criteria
"Stress Tool LIFT"	*"Model"*	Safety Factor	1.62	None
"Stress Tool LIFT"	*"Model"*	Safety Margin	0.62	None

- Convergence tracking not enabled.

Appendices

A1. Scenario 1 Figures

No figures to display.

A2. Definition of "Stainless Steel"

Table A2.1. *"Stainless Steel"* Constant Properties

Name	Value
Compressive Ultimate Strength	0.0 psi
Compressive Yield Strength	30,022.82 psi
Density	0.28 lbm/in^3
Poisson's Ratio	0.31
Tensile Yield Strength	30,022.82 psi
Tensile Ultimate Strength	84,992.14 psi
Young's Modulus	2.8×10^{7} psi
Thermal Expansion	9.44×10^{-6} 1/°F
Specific Heat	0.11 BTU/lbm·°F
Thermal Conductivity	2.02×10^{-4} BTU/s·in·°F
Relative Permeability	10,000.0
Resistivity	38.62 Ohm·Cir-mil/in

A3. Distributing This Report

The following table lists the files that you need to include for posting this report to an Internet or Intranet web server or for moving this report to a different location. Store all files in the same folder as the HTML page.

This report was originally generated in the folder *"C:\Documents and Settings\krogstad\Application Data\Ansys\v100\"*.

Table A3.1. Files Included In This Report

File Name	Description
"DSReport.htm"	This HTML page.
"StyleSheet.css"	The Cascading Style Sheet used to format the HTML page.
"AnsCompanyLogo.gif"	The ANSYS image displayed at the top of the title page.

Equivalent Stress

Subject: Lifting Lugs, Ballast Tank Assembly
Author: Kevin Rogstad
Prepared For: BrookHaven Nation Laboratory
Date Wednesday, January 11, 2006
Comments:

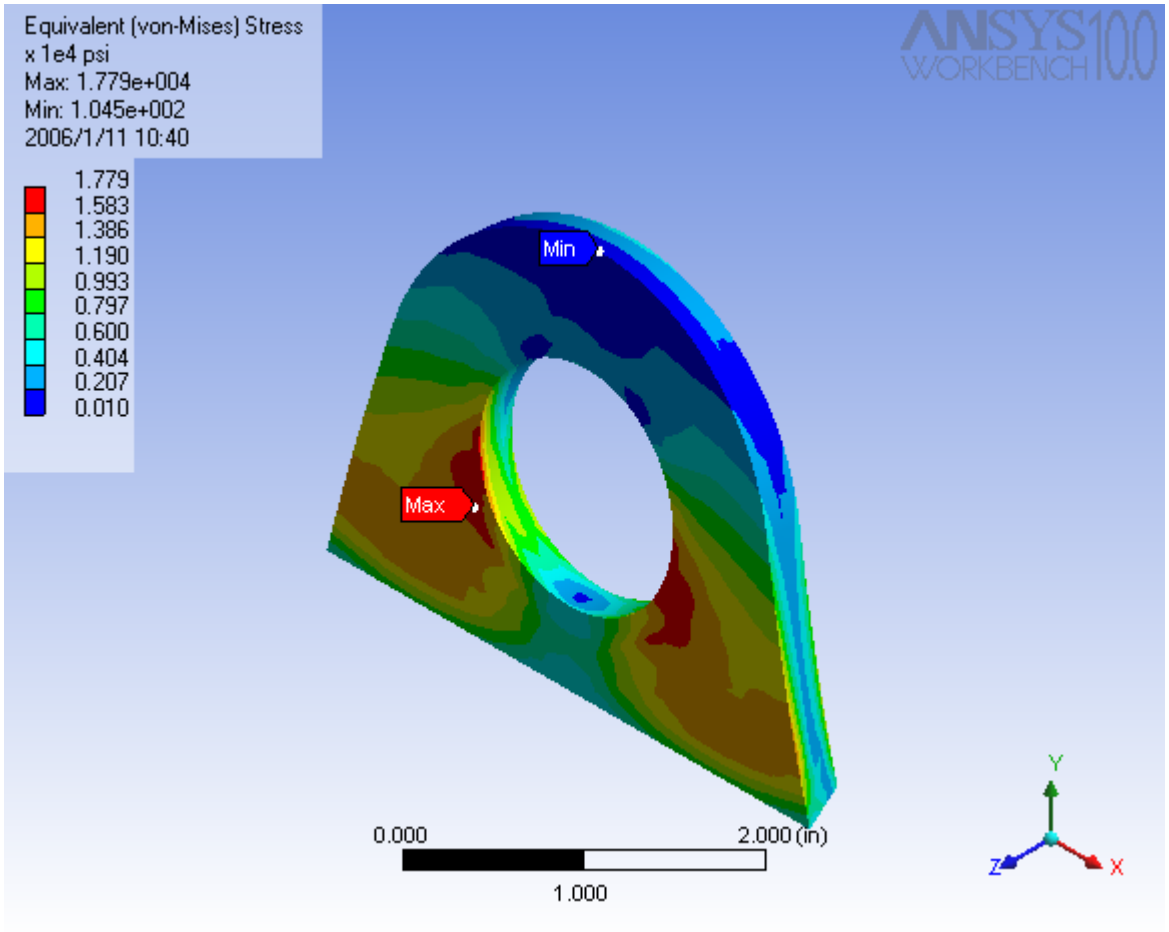

Maximum Shear Stress

Subject: Lifting Lugs, Ballast Tank Assembly
Author: Kevin Rogstad
Prepared For: BrookHaven Nation Laboratory
Date Wednesday, January 11, 2006
Comments:

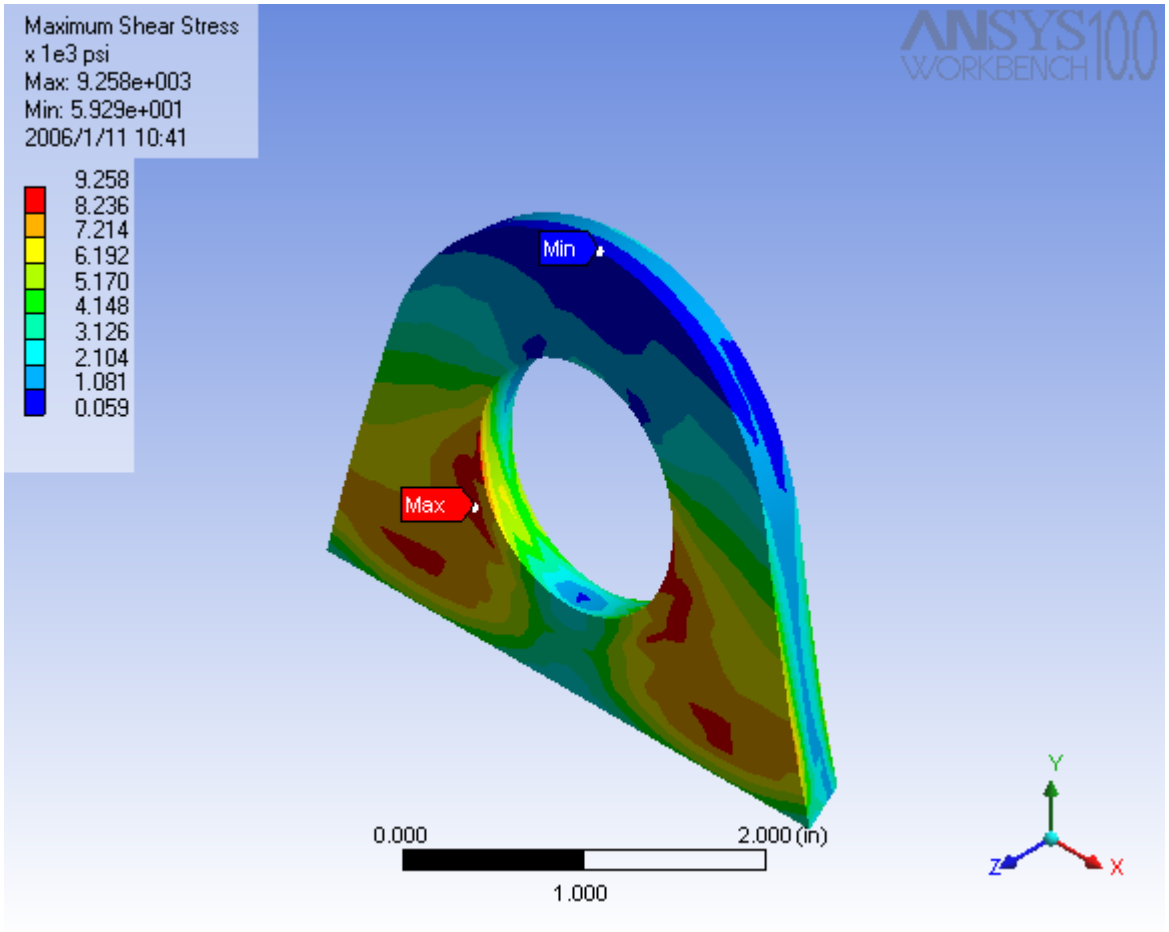

Total Deformation

Subject: Lifting Lugs, Ballast Tank Assembly
Author: Kevin Rogstad
Prepared For: BrookHaven Nation Laboratory
Date Wednesday, January 11, 2006
Comments:

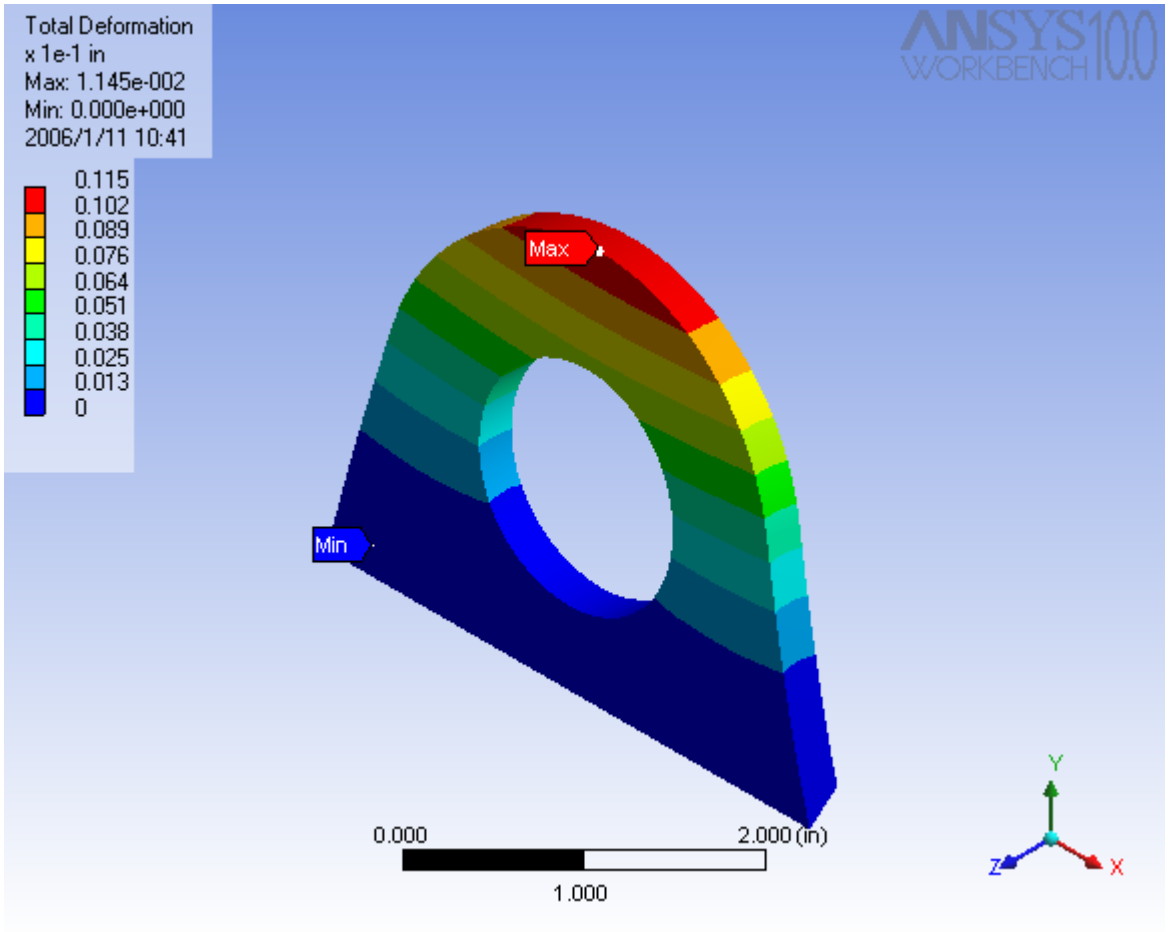

Cryogenic System for the Energy Recovery Linac

A. Nicoletti

D. Lederle

ERL 2K OPERATIONS

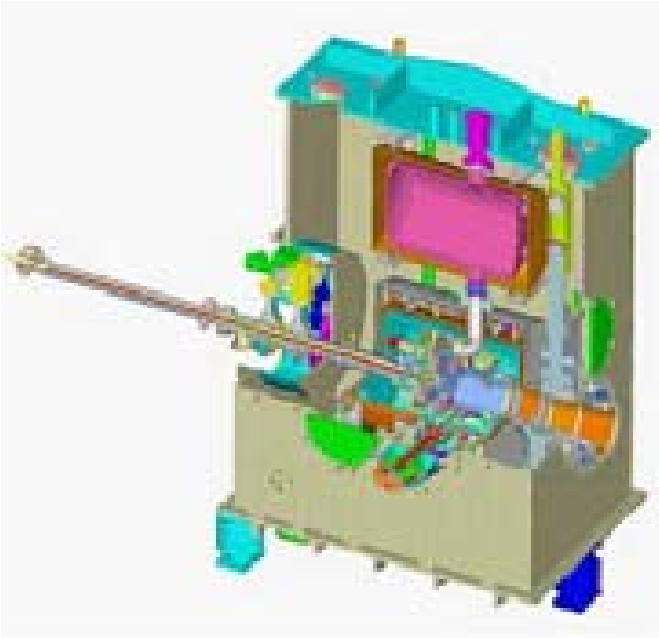

700 MHZ Super conducting RF Gun

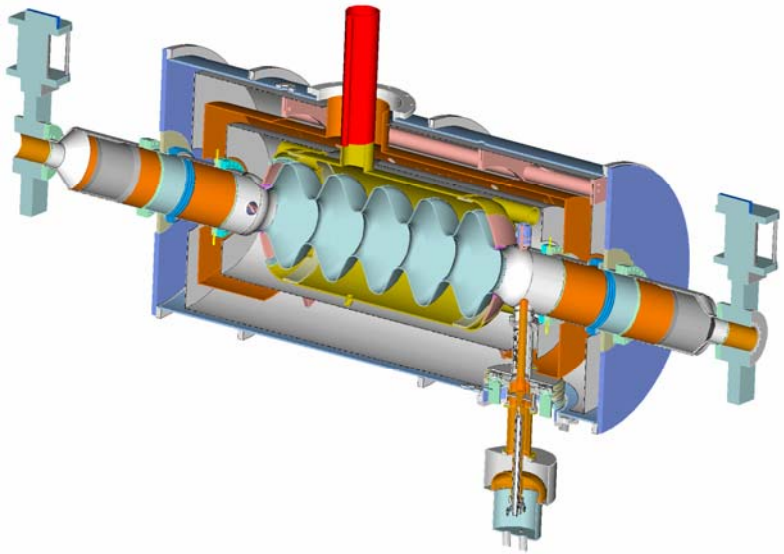

5 Cell Cavity

1.3 GHz SCRF Gun (formerly in Building 939)

2K Operations

- <u>5 Cell Cavity and 700 MHz SRF Gun</u>
  - Cooled down and filled from a local helium dewar
    - 500 Liter Supply dewar located outside of Block house
    - When cavity and/or gun are filled, close supply valve, pump down to 2K via vacuum pump
    - 2 K Operations while Helium remaining after pump down boils off
    - Est. 2.5-3 hrs of 2 K operations with built in Helium reservoir on top of cavity and gun
    - Pressurized 250 Liter dewar located adjacent to cavity or gun to provide 5K cooling to power coupler, end flanges
    - Cold gas routed through vaporizer before reaching vacuum pump
    - LN2 heat shield fed from buggy adjacent to the block house

- <u>1.3 GHz RF Gun</u>
  - Same operating concept except 500 liter fill dewar will be local to RF gun inside block house
  - Does not have associated pressurized Helium dewar
  - Does not have LN2 heat shield

- Refrigerator will eventually be installed – not covered in this review

Until the refrigerator is in place only one component will be operating cold at any given time

Layout in Building 912

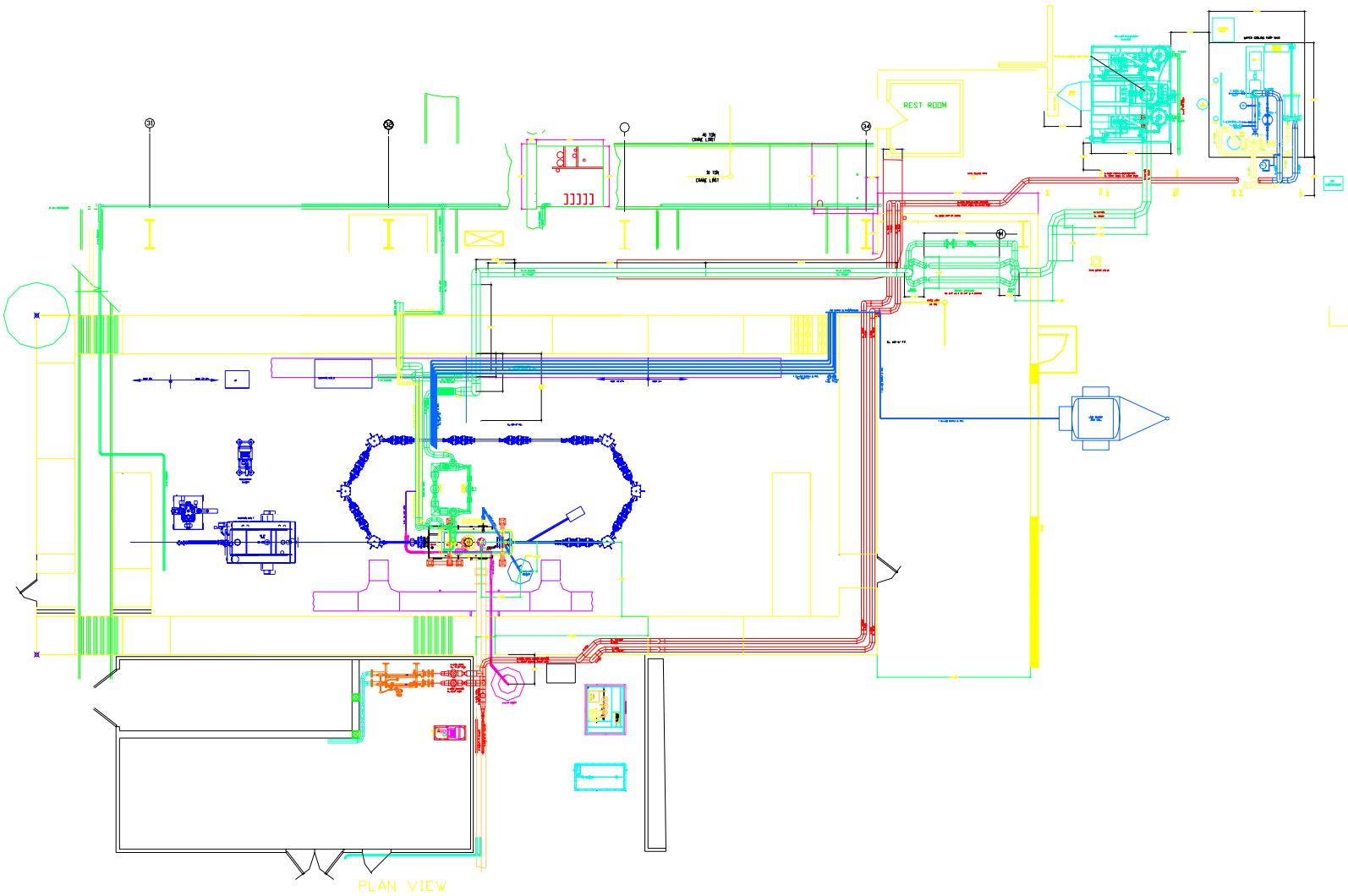

Process and Instrumentation – 5 cell only

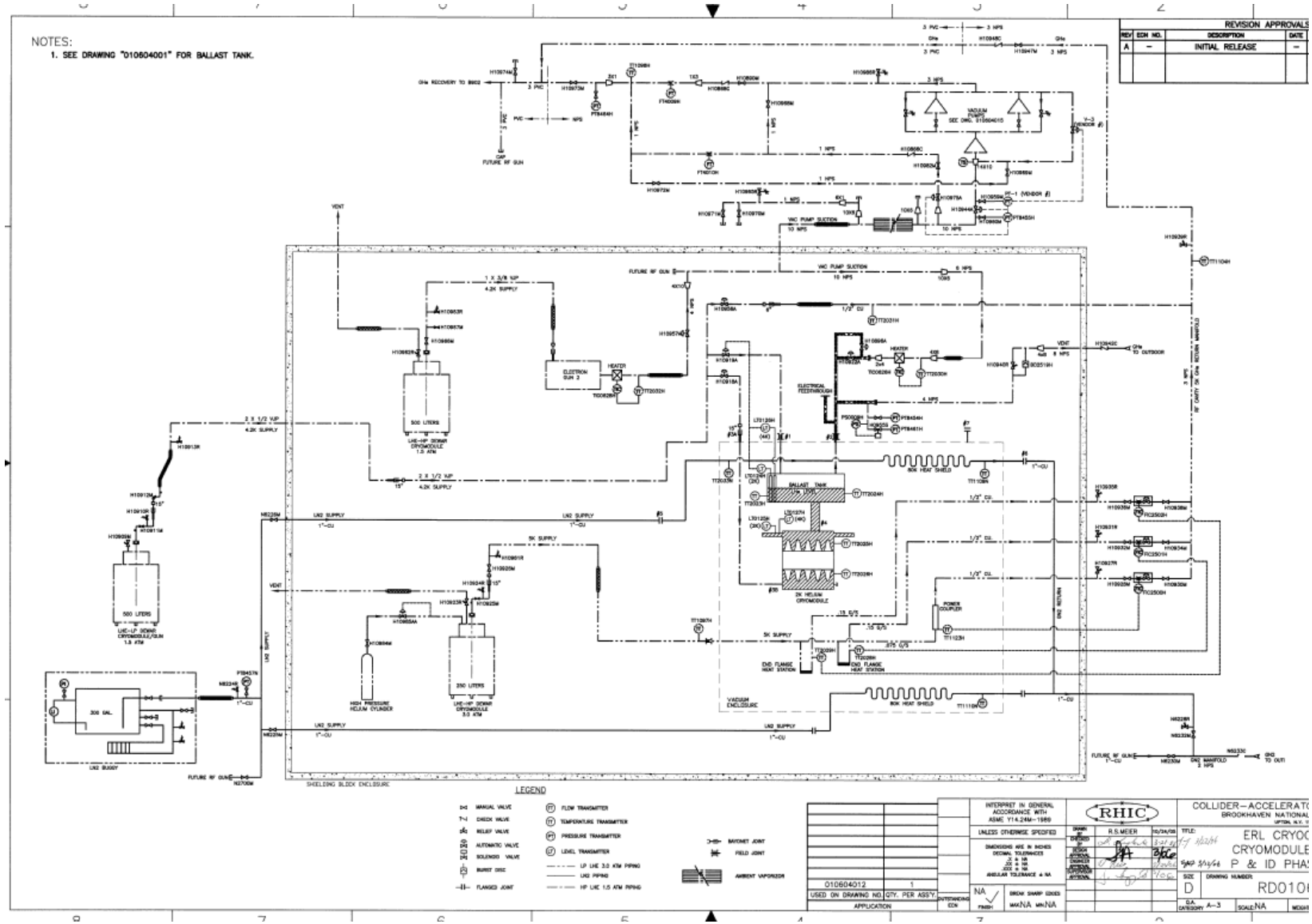

General Safety Features

- All Trapped Volumes protected by relief valves
- Relief valves vent out of the block house
  - Except for small relief on transfer line
    - <15 scf in trapped volumes
- N2 heat shield outlet vent out of the building
- Heaters to prevent Liquid O2 buildup
- Gutters under cold lines protecting equipment from condensation
- Sensors alarm if cold gas reaches PVC piping
- Process valves fail to safe position on loss of power and pneumatics
- Vacuum pump protected from cold gas by vaporizer

Ballast Tank Safety Features

- Mounted on top of 5 cell cavity
  - Provides operating time at 2k
- Safety Features
  - Designed to ASME BPVC and Stamped
  - Lifting lug calculations/stress report provided by vendor and checked by BNL
  - Pressure check certification from vendor
  - FEA done on Support structure

5 cell Cavity- Safety Features

- Relief Valve/burst disk set to protect cavity
- Helium vessel rated for 50 psig
- Relief valves
  - Sized for catastrophic loss of insulating vacuum
    - .5 W/cm^2
  - Sized for catastrophic loss of beam tube vacuum
    - 3 W/cm^2
- Relief valves vent out of Block house
- Vacuum vessel relief valve vents out of blockhouse

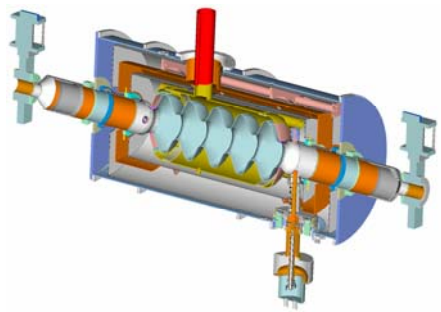

700 MHZ SCRF Gun

- Same design philosophy As 5 cell cavity
- Will submit package for review prior to operations.

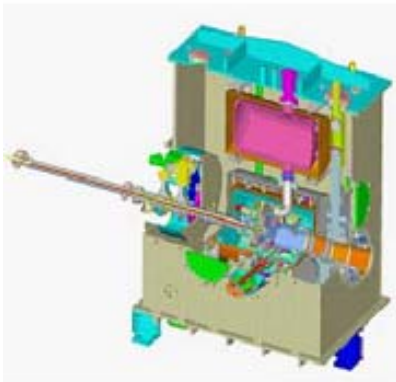

1.3 GHz SCRF Gun

Same RF Gun as building 939 - New Top Loading Cryostat

Cryostat Currently in the design Process

- Designed to ASME boiler Code
- Pressure check certification will be provided to BNL
- Relief Valve Calculations provided to BNL
- Package provided to safety committee for review

Safety Features -Other Components

- High Pressure Dewar
  - DOT-4L certification
    - Pressure test certification provided by vendor
    - Weld Radiograph certification provided by vendor
- Transfer Lines
    - Constructed to B31.3
    - Pressure check certification provided by vendor
    - All field welds pressure checked to 110% of design pressure
- Ambient Vaporizer
    - ASME stamped

Other Components- Continued

- Vacuum Pump
  - Securely fastened to floor
  - Base grouted for secondary oil containment
    - 60 gallons of oil during operations
  - Protected by relief valve
  - NEMA motors
  - ASME Heat exchangers
  - Pump room will be surveyed for noise and posted if necessary
- Warm Piping
  - Full penetration butt weld on all stainless lines
  - Pressure check to 110% of design pressure
  - Misc fittings welded to code

Failure Modes

- Vacuum failure
  - Insulating vacuum failure on RF gun/cavity
    - Components protected by relief valves sized for vacuum failure
  - Beam line vacuum failure on RF gun/Cavity
    - System protected by relief valves
  - Insulating vacuum failure on Dewar
    - Dewar protected by relief valves
  - Transfer line vacuum failure
    - Transfer line protected by relief valve
- Pump failure
  - Slow pressure rise in Helium volume
  - Bypass around pump opens to pvc line
- Cold He Leak into beam line vacuum
  - Rf gun/5 cell cavity protected by relief valve/burst disk
- RF energy dumped into Cryo system – 25 kW
  - Protected by relief valves
  - Worst case is still vacuum failure
- Loss of power/pneumatics
  - Valves fail to safe position

Pressure Ratings

		ERL Component Pressure Ratings			
	Relief Valve ID#	**Description**	**Components**	**MAWP psig**	**Relief Spt psi**
	H10935R	end flange heat station piping and components	FIC 2500	500	60
			H10936M	3000	
			3/4"copper pipe	**291**	
	H10931R	end flange heat station piping and components	FIC 2501	500	60
			H10932M	3000	
			3/4"copper pipe	**291**	
	H10927R	power coupler piping and components	FIC 2500	500	60
			H10928M	3000	
			3/4"copper pipe	**291**	
	H10965R	Vacuum pump suction line	2" sch 10s pipe	1178	15
			4" sch 10s pipe	675	
			6" sch 10s pipe	509	
			10" sch 10s pipe	385	
			H10944A, 10" suct. Valve	285	
			H10975A, 1" cooldown valve	1000	
			H10957A, 4" elect gun suct viv	285	
			PT8455H	120	
			6" braided flex hose	210	
			10" braided flex hose	175	
			vaporizor	**50**	
	N6228R	Ballast tk,cavity, and RF gun heat shields	N6225M	300	60
			N6226M	300	
			N6232M	300	
			N6230M	300	
			N2700M	300	
			3/4" copper L pipe	**291**	
	H10939R	flow controller manifold	3" sch10s pipe	872	60
			H10930M 1/2"	3000	
			H10934M 1/2"	3000	
			H10938M 1/2"	3000	
			H10947M 3"	800	
			stainless flex line 1/2"	1160	
			3/4" L pipe, cooldown line	**291**	
	H10986R	Vacuum Pump skid		**25**	12

All relief valves set well below minimum component pressure rating

Procedures

- Procedures in place prior to operation
  - Pump operations
  - Cold gas reaching PVC pipe
  - Cooldown/Warmup
  - Swapping Dewars

C-A D Engineering Design Support Documentation Cover Page

Document number: 010604026 QAR-01	
Title: Certification Memo ERL Ballast Tank Support Frame and lifting lugs	**Author**: Y. R. Than
Subject:	
C-A Department Group: Cryogenic Systems Group	**Approval**: D. Lederle
Documentation Type **[ ] Written Technical Paper** **[ ] Design Calculations** **[ ] Design Review Presentation** **[x] Design Certification** **[ ] Specification** **[ ] Procurement Documentation** **[ ] Safety/ALARA Review Presentation** Other	**Equipment Type** **[ ] Magnets and Power Supplies** **[ ] Vacuum Systems** **[ ] RF Systems** **[x] Cryogenic Systems** **[ ] Experimental Equipment** **[ ] Beam Instrumentation** **[ ] Water Systems** **[ ] Buildings, Structures, and Shielding** Other
Equipment Location:	**Associated information for cataloging**
[ ] Tandem Van DeGraff	[ ] CA-D Design Room Job No.
[ ] Linac	
[ ] Booster	[ ] CA-D Design Room Drawing No 010604026
[ ] AGS	
[ ] RHIC	[ ] CA-D Specification No
[ ] 912 Experimental Area	
[ ] 919 Experimental Area	[ ] CA-D Experiment No.
[ ] RHIC Experimental Area	
	[ ] Other
[ ] Buildings Structures, and Shielding	
Other ERL	

MEMO

SUPPORT FRAME
This certifies that the ERL Ballast tank support frame has been analyzed for strength and is safe to take the weight of the tank.

LIFTING LUGS
This certifies that the ERL Ballast tank's lifting lugs have been analyzed for strength and that the factor of safety is less than 3, and therefore will not be used for lifting of the tank.
The tank will be lifted using lifting straps with a spreader beam.

C-A D Engineering Design Support Documentation Cover Page

Document number: 010604026 CAL-01	
Title: ERL Ballast Tank Frame and Lifting lugs	**Author**: C.J. Liaw
Subject:	
C-A Department Group: Cryogenic Systems Group	**Approval**: Y. R.. Than
Documentation Type **[ ] Written Technical Paper** **[x] Design Calculations** **[ ] Design Review Presentation** **[ ] Design Certification** **[ ] Specification** **[ ] Procurement Documentation** **[ ] Safety/ALARA Review Presentation** Other	**Equipment Type** **[ ] Magnets and Power Supplies** **[ ] Vacuum Systems** **[ ] RF Systems** **[x] Cryogenic Systems** **[ ] Experimental Equipment** **[ ] Beam Instrumentation** **[ ] Water Systems** **[ ] Buildings, Structures, and Shielding** Other
Equipment Location:	**Associated information for cataloging**
[ ] Tandem Van DeGraff	**[ ]** CA-D Design Room Job No.
[ ] Linac	
[ ] Booster	**[ ]** CA-D Design Room Drawing No 010604026 and 0010604001
[ ] AGS	
[ ] RHIC	**[ ]** CA-D Specification No
[x] 912 Experimental Area	
[ ] 919 Experimental Area	**[ ]** CA-D Experiment No.
[ ] RHIC Experimental Area	
	[ ] Other
[ ] Buildings Structures, and Shielding	
Other	

ERL Ballast Tank Support Stand and Lifting Lug Stress Analysis

(1) The Ballast tank support stand:

Weight of the tank: 1415 lbf
Young's modulus: 30 x 10^6 psi
Yielding stress of steel: 30000 psi (at room temperature)
Density of steel: 0.3 lb/in^3
Fillet weld at joints: .25" x .25"
Sectional properties of the square tubing and the I-beam are shown in Table 1.

The ballast tank will be installed on the support stand as shown in Fig. 1. The support stand was first modeled with Beam elements (using ANSYS) to determine the maximum stress (and the location) and the maximum deformation in the structure due to the structure and the tank weight. A more detailed model, with 3D solid elements, was then used to model the local geometry at the location where the maximum stress occurred to determine the stress in the weldment as well as in the structure member. .

With the structure modeled with the beam elements, the analysis results show that the maximum stress in the structure is 1527 psi (see Fig. 2) and the maximum deformation in the structure is ~.006" (see Fig 3). From the detailed model, the analysis results show that the maximum stress in the weldment at the location, where the maximum stress occurs, is 1718 psi (with a safety factor of 17.5 to yield). This stress is reasonable compared with that by the engineering calculation shown in Appendix 1. The maximum stress estimated by hand calculation is 1794 psi (1718 psi by ANSYS).

The maximum reaction forces in each of the ½" bolts on the foot pad are Fx = 5.2 lbf, Fy = 145.1 lbf, and Fz = 14.5 lbf. The combined stress inside the bolt is 1028 psi (with a safety factor of 29 to the yielding stress).

The critical load to cause structure instability in the 75" long column is around 108400 lbf (the total weight of the tank is only 1415 lbf). Therefore buckling is not an issue for this case.

In conclusion, the support structure is safe to take the weight of the ballast tank.

(2) The lifting lugs:

Weight of the tank: 1415 lbf
Young's modulus: 30 x 10^6 psi (A36) and 28 x 10^6 psi (SST)
Yielding stress of A36 steel (Lug material): 36000 psi
Yielding stress of 304 SST (Tank material): 35000 psi
Density of steel: 0.3 lb/in^3
Fillet weld between the lug and the tank: .25" x .25"

The ballast tank is currently lying on the ground facing on its side. To install the tank onto the stand, one needs to lift the tank off the ground and to carry the tank onto the support stand. There are four lugs pre-welded on the outer shell of the tank (see Fig. 6). The following analysis is to evaluate the stress in the lug and in the weldment when lifting the tank.

Assuming that all the lugs were used to lift the tank (see Fig. 7) and the center of gravity(CG) was located close to the middle of the tank, one eighth of the ballast tank with one lug on it was modeled in ANSYS for the analysis (see Fig. 8). The lifting force on the lug was F = 1415 / (4*cos(35°)) = 432 lbs. The force direction with respect to the lug is shown in Fig. 7. Symmetric boundary conditions were applied to the cutting edges of the model. By limiting the maximum contact stress between the shank and the lug eye hole to 12 kips (a safety factor of 3 to yield), the shank diameter should be 1.496" OD (for the 1.5" eye hole) and the contact length will be .845" along the eye hole of the lug (per Roark and Young's formula). This information was also applied to the ANSYS model for the analysis.

Fig. 9 shows that the maximum stress on the lug is 15875 psi (SF of 2.27 to yield). Fig. 10 shows the stress distribution around the maximum stress area. Fig. 11 shows that the maximum stress on the weldment is 7740 psi (SF of 4.65 to yield). The maximum stress on the lug was also estimated by engineering calculation in Appendix 2. The maximum stress estimated by hand calculation is 15350 psi (15875 psi by ANSYS).

In conclusion, it is safe to lift the weight of the ballast tank by using the four lugs on the tank together.

Table 1: Sectional properties of Support components

Item	A (in^2)	Ix (in^4)	Iy (in^4)
4 x 4 x .25 Square Tubing	3.75	8.83	8.83
W4 x 13 I-Beam	3.83	11.3	3.86

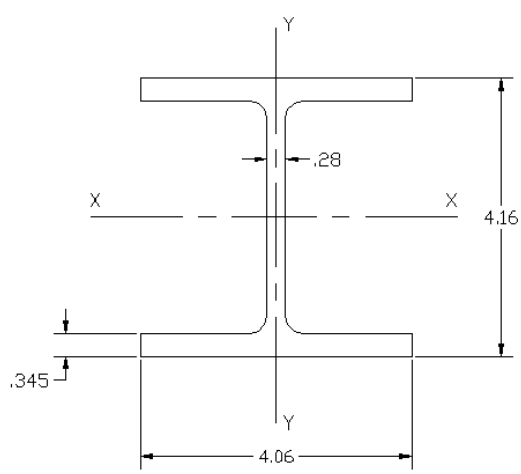

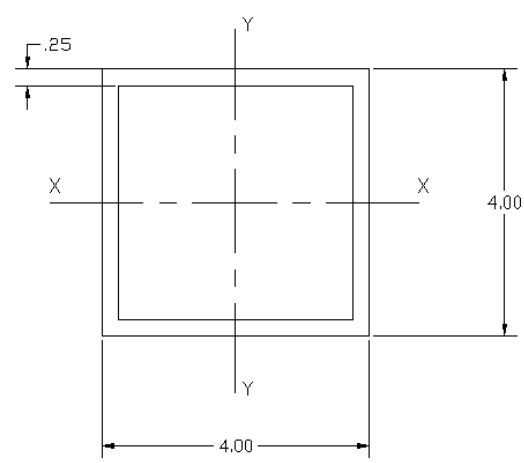

Fig. 1: The Ballast Tank Support Structure

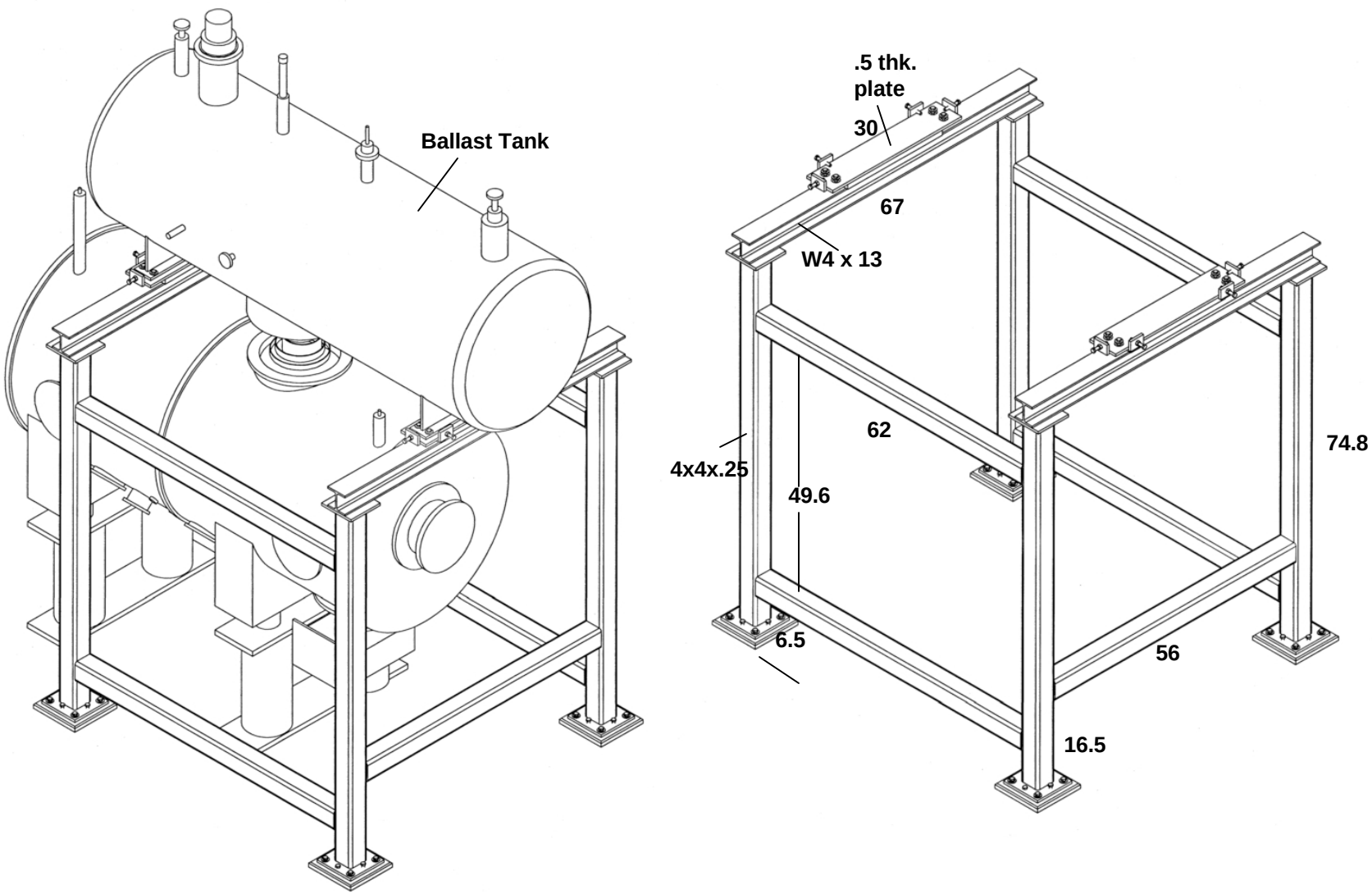

Fig. 2: Maximum stress in the support structure

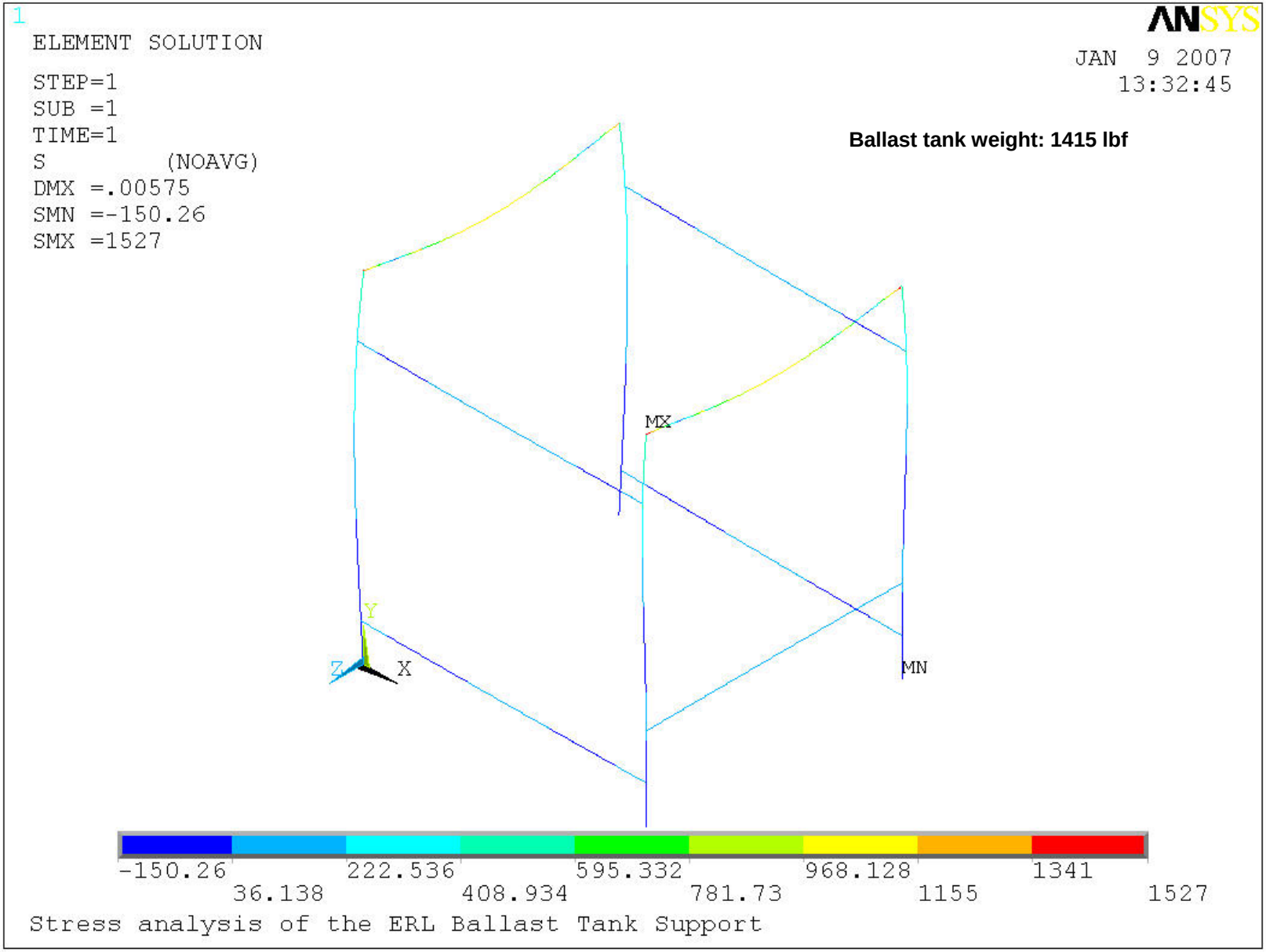

Fig. 3: Deformation of the support structure

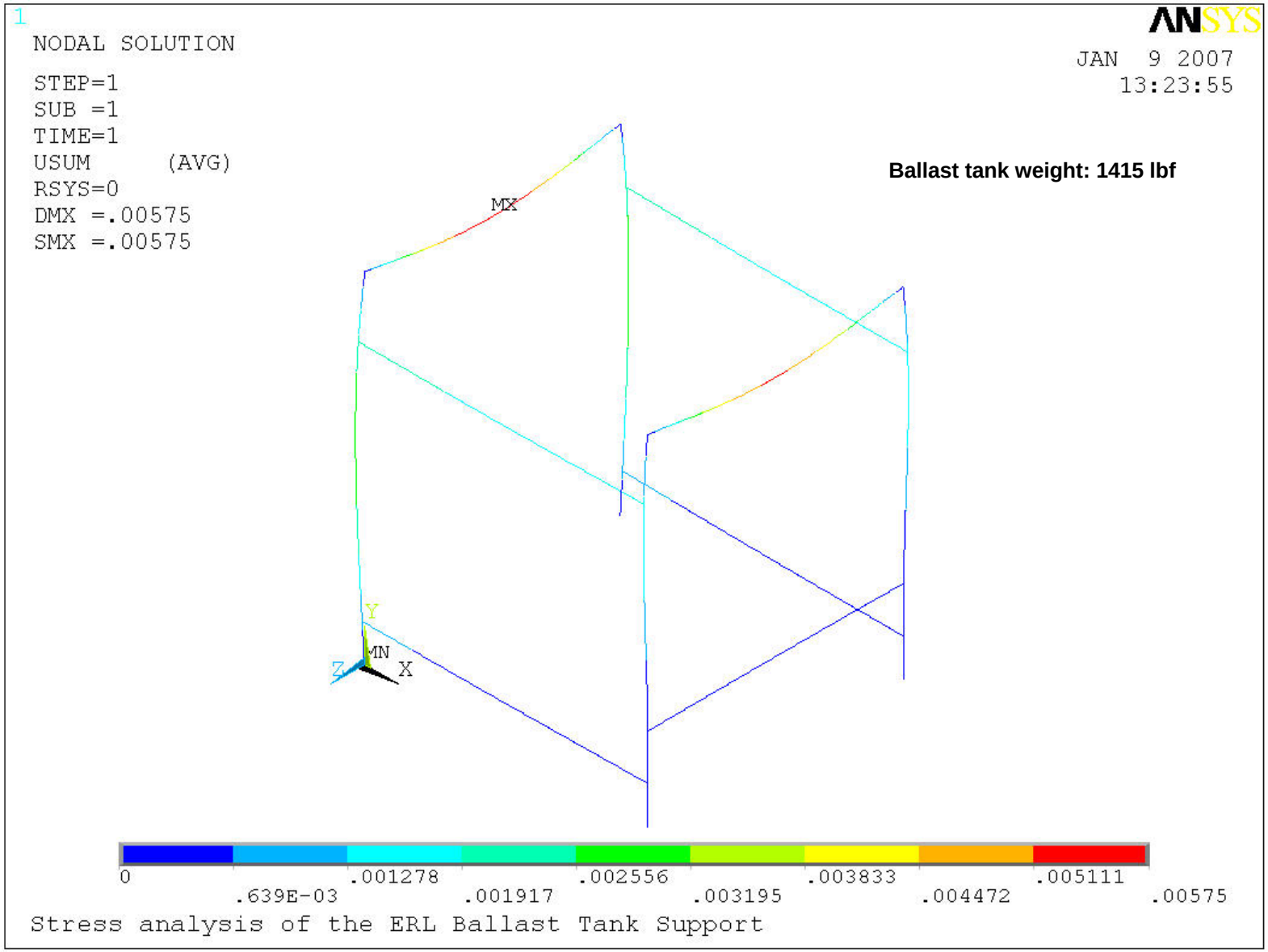

Fig. 4: Stress at the corner where maximum stress occurs (Top view)

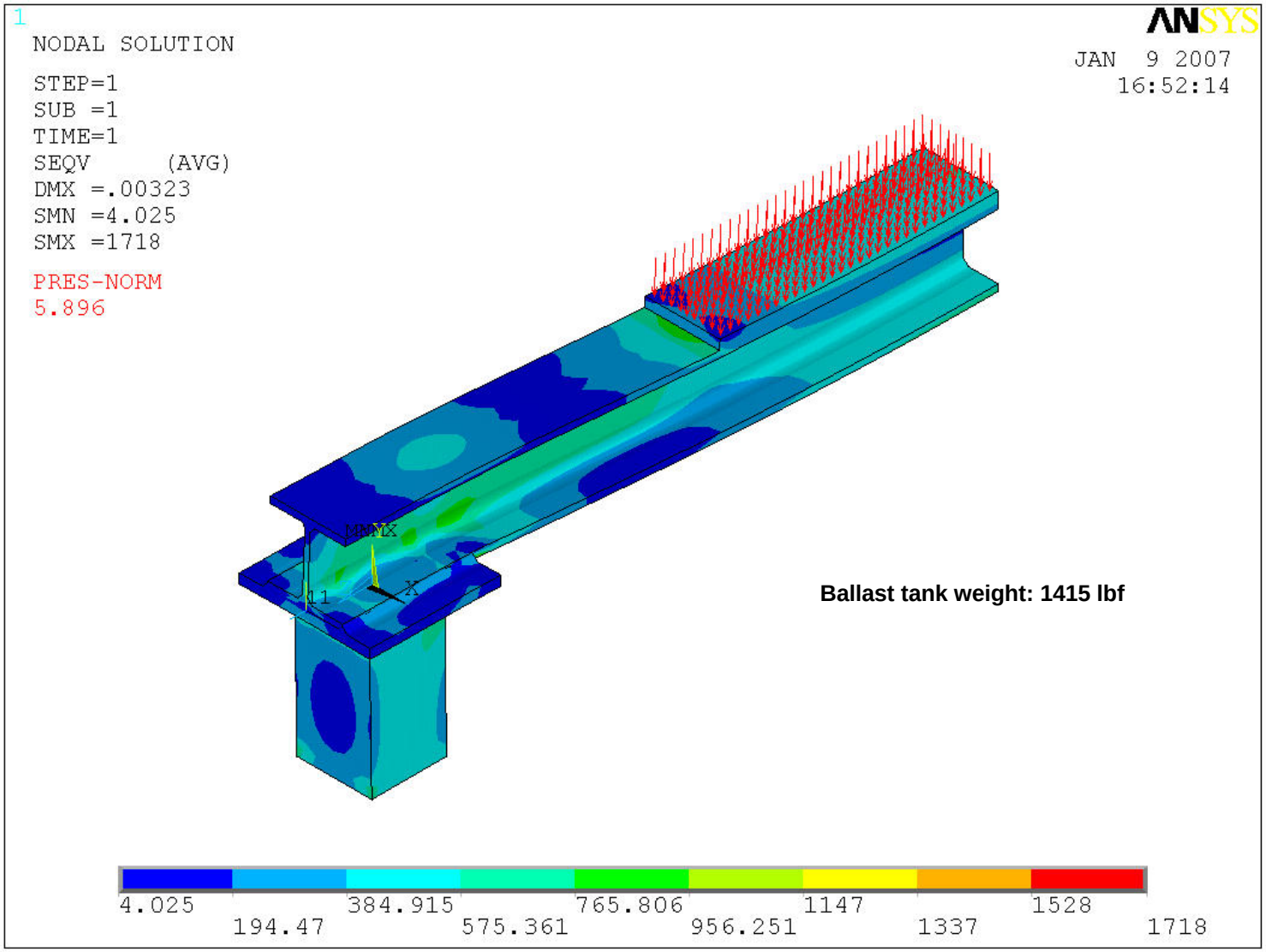

Fig. 5: Stress at the corner where maximum stress occurs (Bottom view)

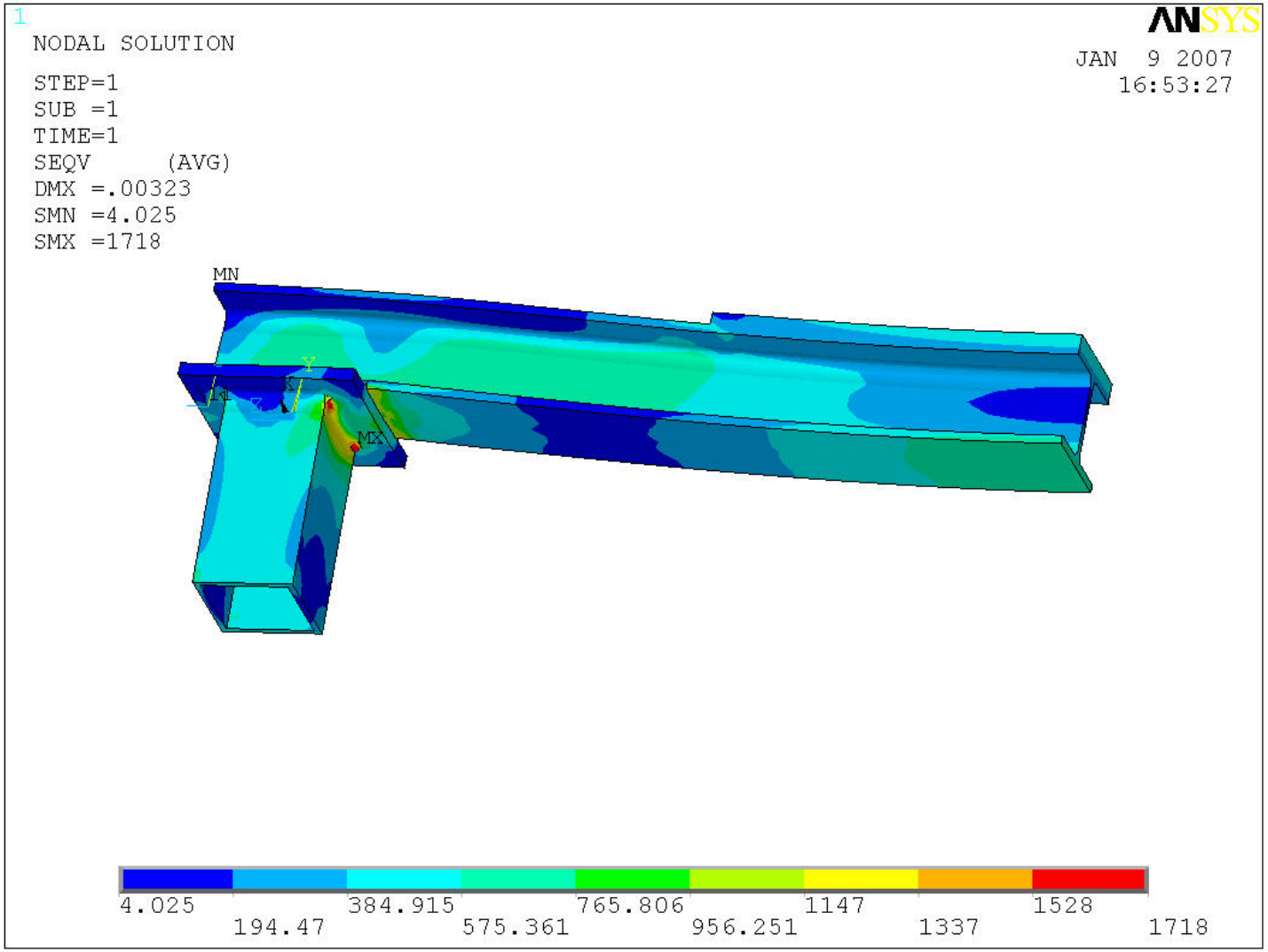

Fig. 6: Dimensions of the ballast tank and the lifting lug

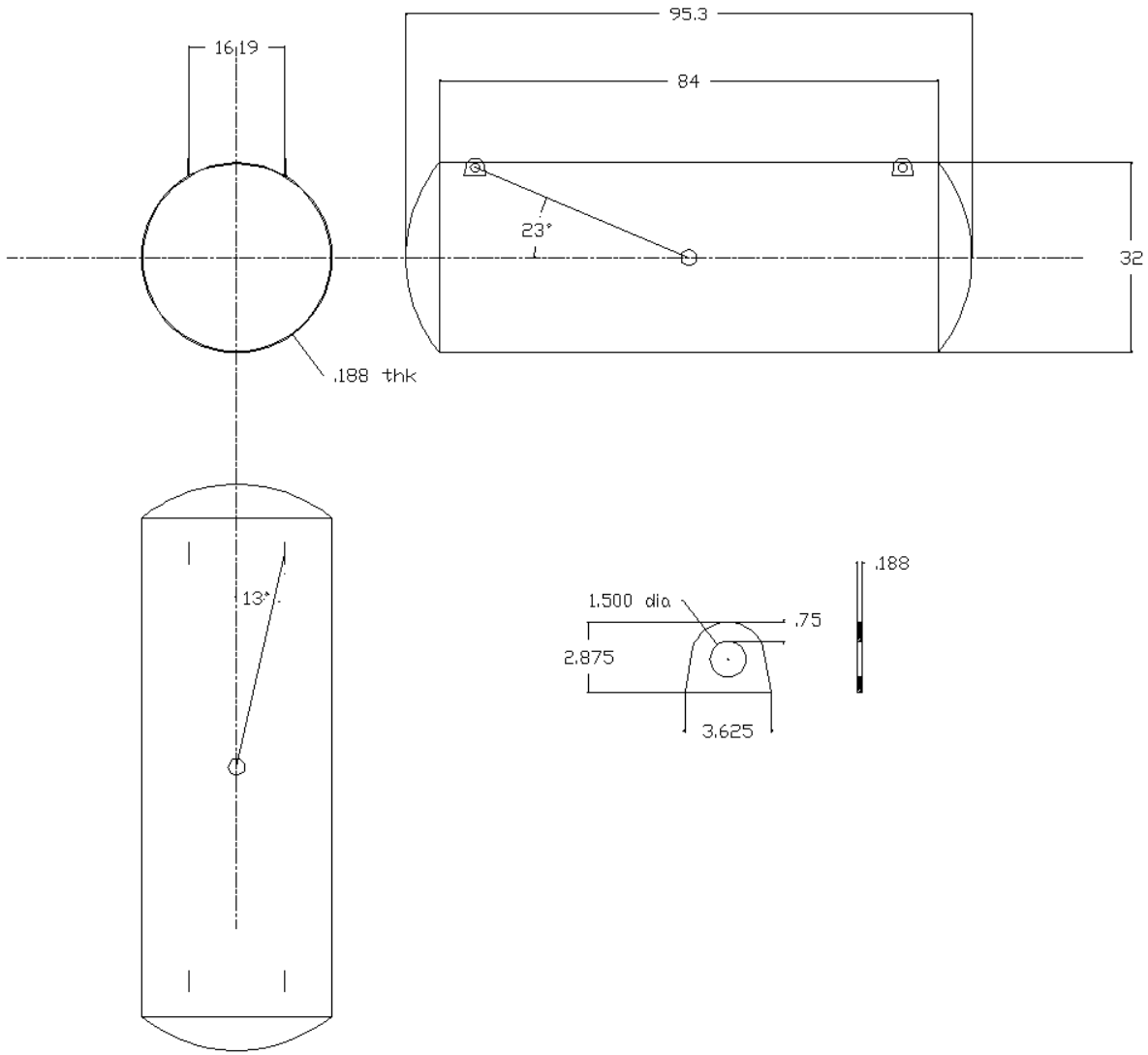

Fig. 7: Lifting the tank using 4 Lugs

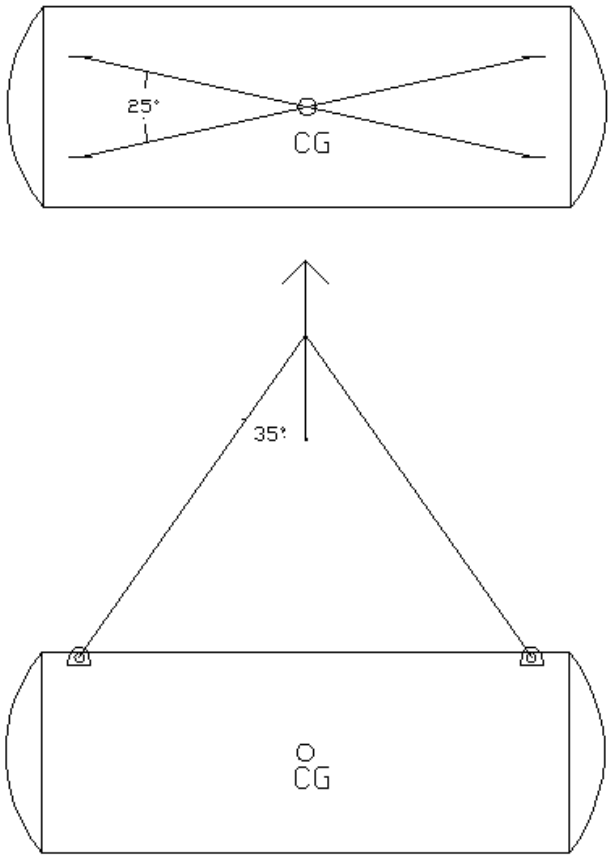

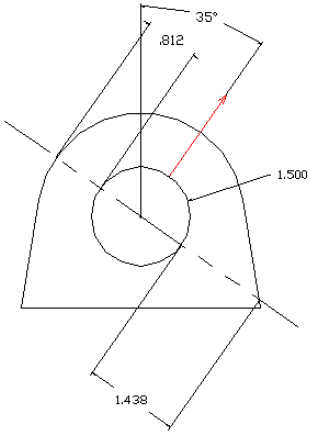

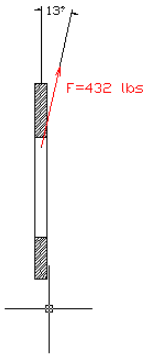

Fig. 8: ANSYS Model of a Lifting Lug On the Ballast Tank

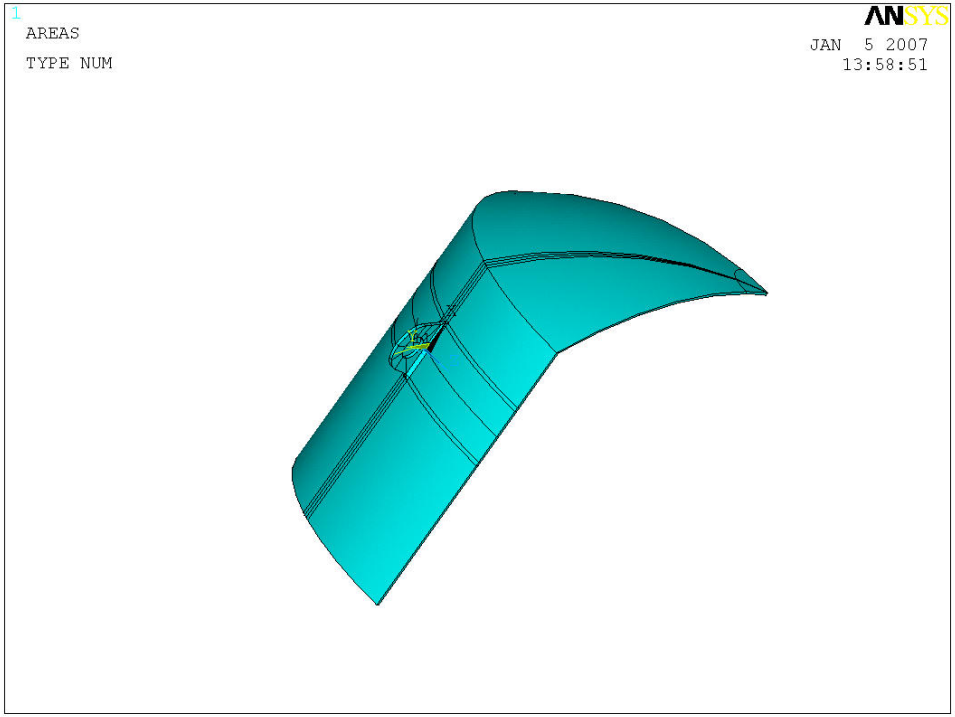

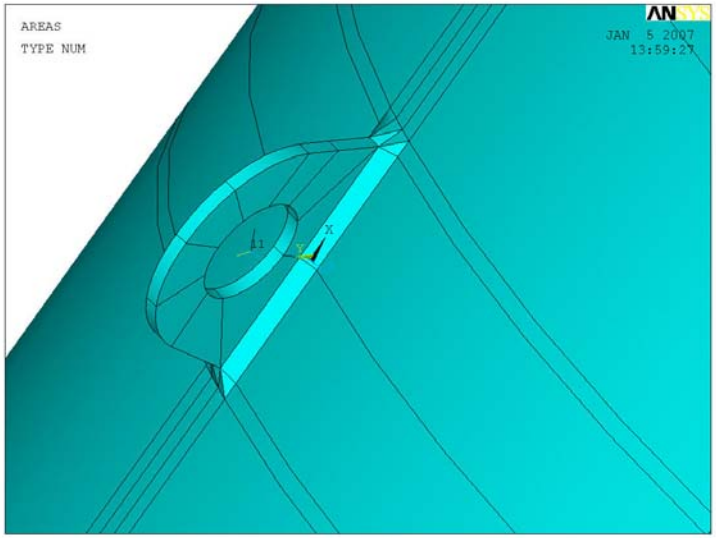

Fig. 9: Stress on the Lug and the Tank (Lifting using four Lugs)

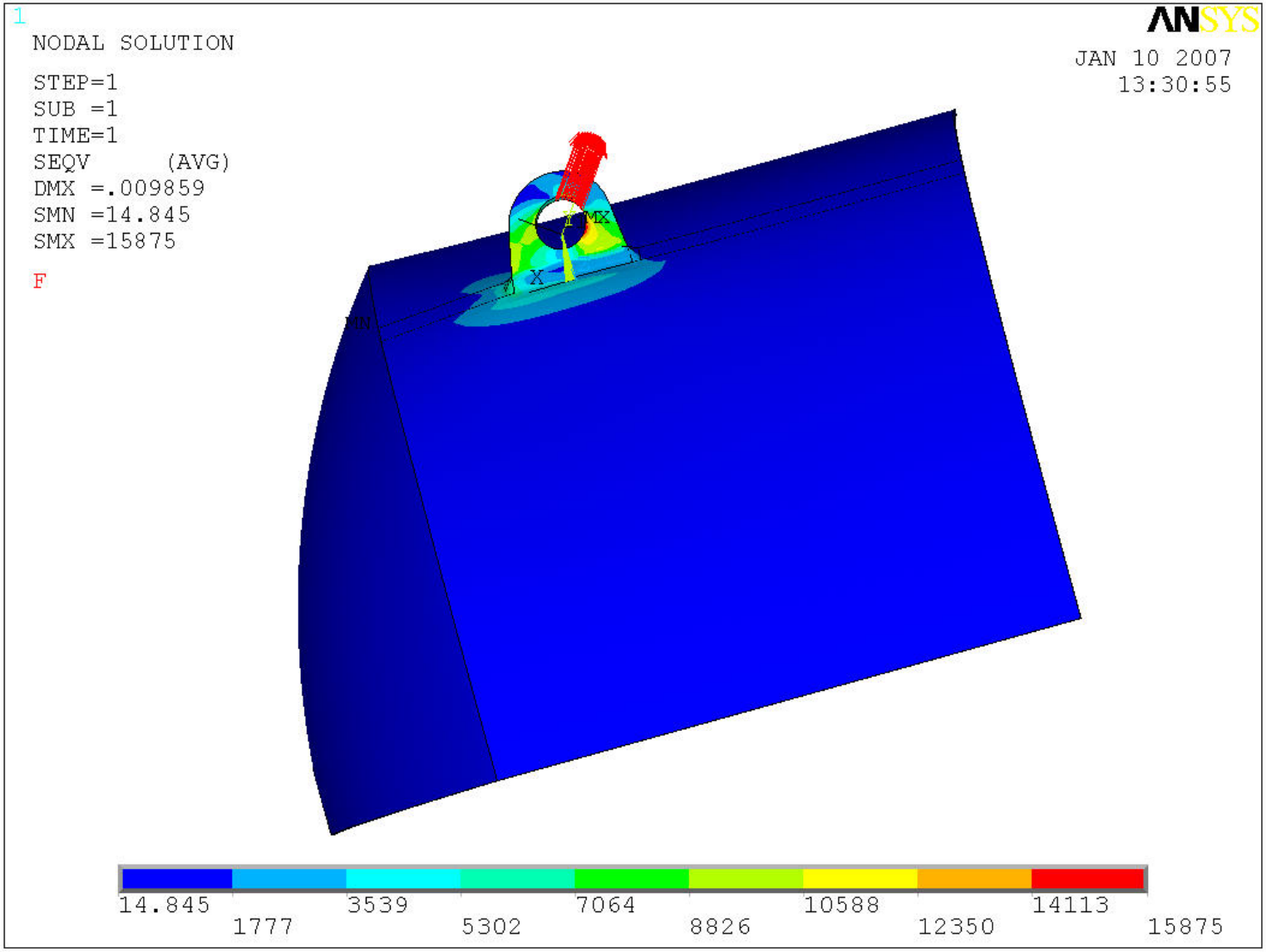

Fig. 10: Stress around the maximum stress area

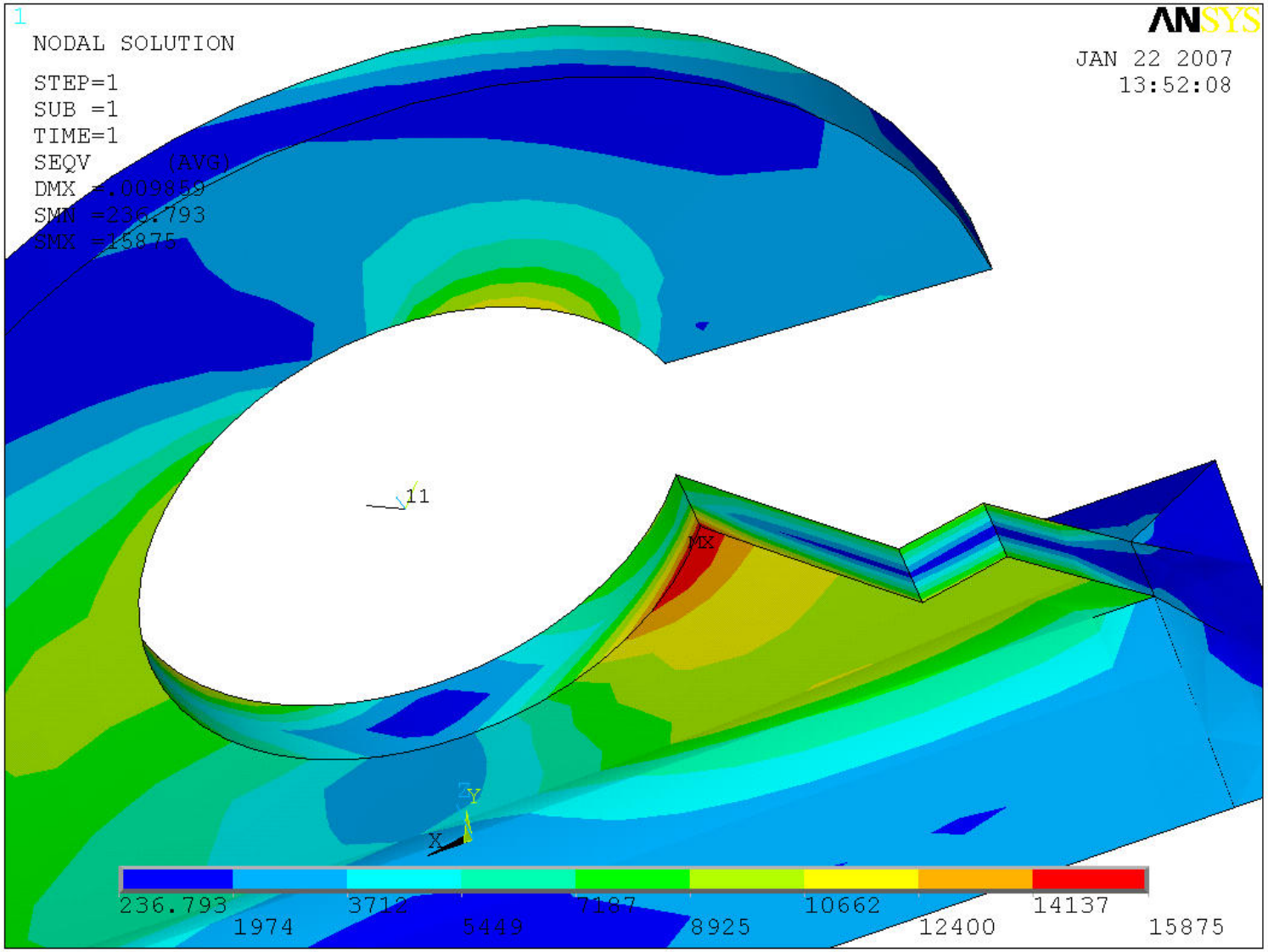

Fig. 11: Stress on the weldment (Lifting using four Lugs)

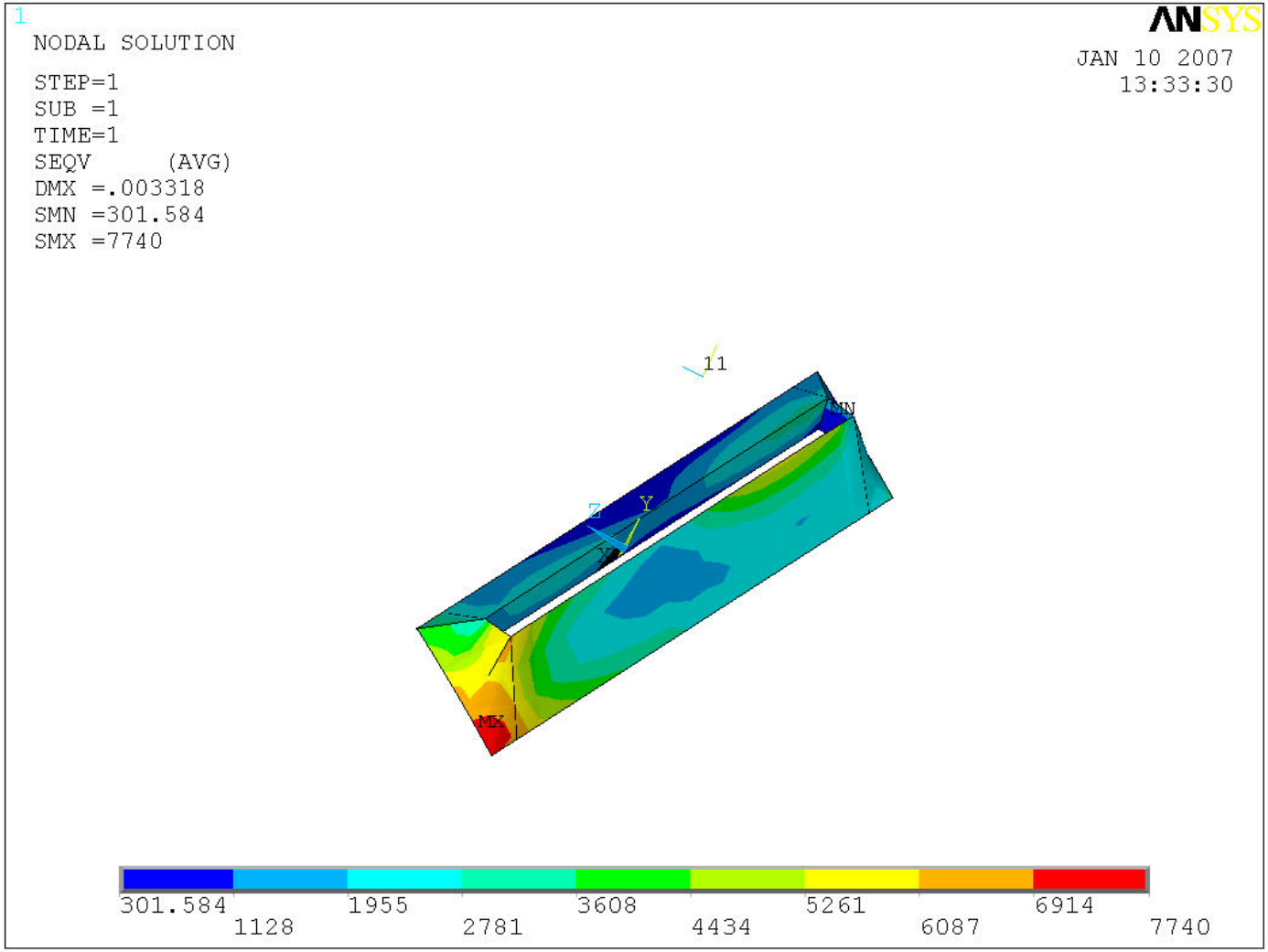

Appendix 1: Stress Analysis of a Beam with Uniform Loading at the Middle Portion

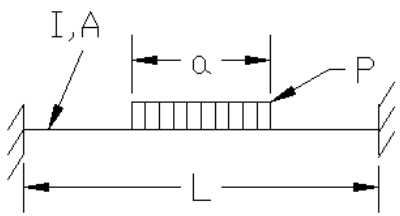

$E := 30 \cdot 10^6$ psi

$I := 11.3$ in^4

$a := 25$ in

$Length := 56$ in $\quad Load := \frac{1415}{2}$ lbs

$p := \frac{Load}{a} \quad p = 28.3 \quad \frac{lbs}{in}$

$y := \frac{4.16}{2}$ in $\quad A := 4 \cdot 25 \cdot 4 \quad y = 2.08$

Case1: Uniform load along the whole length:

$$Ma1 := -p \cdot \frac{Length^2}{12} \qquad Ma1 = -7.396 \cdot 10^3 \quad lbs - in$$

$$Ra1 := p \cdot \frac{Length}{2} \qquad Ra1 = 792.4 \quad lbs$$

Case 2:Uniform load , (L-a)/2 long; right hand side

$$LL1 := \frac{Length + a}{2}$$

$$Ma2 := -p \cdot (Length - LL1)^3 \cdot \frac{(Length + 3 \cdot LL1)}{12 \cdot Length^2} \quad lbs - in$$

$$Ra2 := p \cdot (Length - LL1)^3 \cdot \frac{(Length + LL1)}{2 \cdot Length^3} \quad lbs$$

Case3: Uniform load, (L-a)/2 long, left hand side

$$LL := \frac{Length - a}{2} \qquad LL = 15.5$$

$$Ma3 := -p \cdot LL^2 \cdot \frac{\left(6 \cdot Length^2 - 8 \cdot LL \cdot Length + 3 \cdot LL^2\right)}{12 \cdot Length^2} \quad lbs - in$$

$$Ra3 := p \cdot LL \cdot \frac{\left(2 \cdot Length^3 - 2 \cdot LL^2 \cdot Length + LL^3\right)}{2 \cdot Length^3} \quad lbs$$

Case 1-Case 2-Case3:

$Ma := Ma1 - Ma2 - Ma3$ $\quad Ma = -4.623 \cdot 10^{3}$ $\quad lbs - in$

$Ra := Ra1 - Ra2 - Ra3$ $\quad Ra = 353.75$ $\quad lbs$

Max

$Sig1 := \frac{Ma}{(y + .5) \cdot (.25 \cdot 4)}$ $\quad Sig1 = -1.792 \cdot 10^{3}$ $\quad psi$

$Sig2 := \frac{Ra}{A}$ $\quad Sig2 = 88.437$ $\quad psi$

$Sig := \left(Sig1^{2} + Sig2^{2}\right)^{.5}$ $\quad Sig = 1.794 \cdot 10^{3}$ $\quad psi$

Appendix 2: Estimation of Maximum Stress on the Lug (at Pt. A)

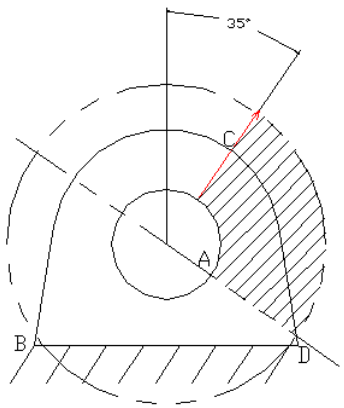

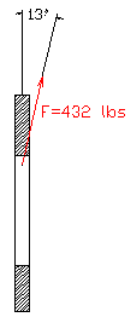

Fig. A1

Considering the shaded portion in Fig. A1 and assuming line AD being fixed, the model can be simpified to Fig. A2.

$F := 432$ lbs

$BC := 4.816$ in (Length of BC)

$CD := 2.881$ in (Length of CD)

The estimated laod on the shaded portion in Fig. A1:

$$P := 432 \cdot \frac{4.816}{(4.816 + 2.881)} \qquad P = 270.302 \quad \text{lbs}$$

$r1 := .75$ in

$r2 := .75 + 1.438 \qquad r2 = 2.188$ in

$h := 1.438$ in

$$r := \frac{(r1 + r2)}{2} \qquad r = 1.469 \quad \text{in}$$

$t := .188$ in

$$h1 := \frac{h}{2} \qquad h1 = 0.719 \quad \text{in}$$

$$A := h \cdot t \qquad A = 0.27 \quad \text{in}^2$$

$$m := \frac{r}{h} \cdot \ln\left(\frac{r2}{r1}\right) - 1 \qquad m = 0.094$$

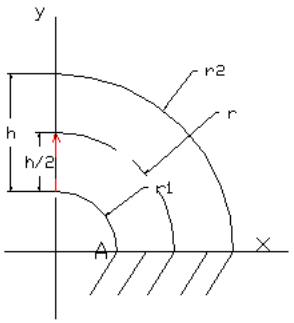

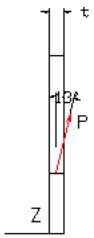

Fig. A2

E:The distance between the neutral bedning axis and the cenetr line of the cross section

$E := m \cdot \frac{r}{(m+1)}$ $\quad E = 0.126$ $\quad$ (Per Timoshenko, "Strength of Materials)")

1. Maximum stress at Pt. A due to in-plane bending:

$Sig1 := P \cdot r \cdot \cos\left(13 \cdot \frac{3.1416}{180}\right) \cdot \frac{(h1 - E)}{A \cdot E \cdot r1}$ $\quad Sig1 = 8.988 \cdot 10^3$ $\quad$ psi

(Per Timoshenko, "Strength of Materials)")

2. Maximum stress at Pt. A due to out of plane bending:

$$Sig2 := P \cdot \frac{r1 \cdot \sin\left(13 \cdot \frac{3.1416}{180}\right) \cdot \left(\frac{t}{2}\right)}{h \cdot \frac{t^3}{12}}$$

$Sig2 = 5.384 \cdot 10^3$ $\quad$ psi

---

3 Normal stress at Pt.A:

$$Sig3 := \frac{P \cdot \cos\left(13 \cdot \frac{3.1416}{180}\right)}{A}$$

$Sig3 = 974.217$ $\quad$ psi

4. Shearing stress at Pt. A:

$$Sig4 := \frac{P \cdot \sin\left(13 \cdot \frac{3.1416}{180}\right)}{A}$$

$Sig4 = 224.916$ $\quad$ psi

The overall maximum stress at Pt A:

$Sig := \left[(Sig1 + Sig2 + Sig3)^2 + Sig4^2\right]^{.5}$ $\quad Sig = 1.535 \cdot 10^4$ $\quad$ psi

C-A D Engineering Design Support Documentation Cover Page

Document number: A03G00001-QAR-01	
Title: MEMO on Cavity Material	**Author**: Y. R. Than
Subject:	
C-A Department Group: Cryogenic Systems Group	**Approval**:
Documentation Type **[ ] Written Technical Paper** **[ ] Design Calculations** **[ ] Design Review Presentation** **[ ] Design Certification** **[ ] Specification** **[ ] Procurement Documentation** **[ ] Safety/ALARA Review Presentation** Other Memo	**Equipment Type** **[ ] Magnets and Power Supplies** **[ ] Vacuum Systems** **[ ] RF Systems** **[ ] Cryogenic Systems** **[ ] Experimental Equipment** **[ ] Beam Instrumentation** **[ ] Water Systems** **[ ] Buildings, Structures, and Shielding** Other
Equipment Location:	**Associated information for cataloging**
[ ] Tandem Van DeGraff	**[ ]** CA-D Design Room Job No.
[ ] Linac	
[ ] Booster	**[ ]** CA-D Design Room Drawing No
[ ] AGS	
[ ] RHIC	**[ ]** CA-D Specification No
[ ] 912 Experimental Area	
[ ] 919 Experimental Area	**[ ]** CA-D Experiment No.
[ ] RHIC Experimental Area	
	[ ] Other
[ ] Buildings Structures, and Shielding	
Other ERL	

ERL CAVITY MATERIAL

In general the cavity and helium vessel shall be designed and manufactured in accordance with ASME BPVC VIII Div.1. Niobium would fall under part UNF: *Requirements for pressure vessels constructed of nonferrous materials, however* Niobium is not listed as an ASME BPVC VIII material.

A design basis for an exception from this requirement is based on experience with this material used for superconducting cavities built and in use throughout facilities all over the world combined with careful design of containment systems should allow niobium to be an acceptable material choice.

Containment
The Niobium cavity forms the boundary between the accelerator beam tube vacuum space and the liquid helium bath side. On the beam vacuum side the cavity is contained by the beam tube, on the helium side the cavity is contained by the Titanium vessel, which in turn is contained by the insulating vacuum vessel.

Maximum Allowable Working Pressure MAWP
The MAWP will be set at 20 psia, which will give a peak stress of 3500 psi or ½ of Yield at room temperature with a factor of safety greater than 5 (Code is 3.5).

Material certification

The Niobium material used for the cavity has been chemically analyzed.

Material Strength Tests

Mechanical strength tests have been carried out to determine yield and tensile properties.

Table 1.1 Mechanical Properties Niobium (RRR Grade)

	Room Temperature	Cryogenic Temperature 4K
Modulus	1.49 E+07 psi	1.79E+07 psi
Poisson Ratio	0.38	0.38
Yield	7.0 ksi	83 ksi
Ultimate	20 ksi	

Pressure Test
The Cavity will be pressure tested at room temperature at 110% of MAWP.

ACTION ITEM STATUS - 5/9/07

Laboratory Environment Safety and Health Committee
Cryogenic Safety Subcommittee

MINUTES OF MEETING 06-06

May 18, 2006

Final

Committee Members Present	Committee Members Absent
W. Glenn	R. Alforque
S. Kane	P. Mortazavi
E. Lessard (Chairperson)	
M. Rehak	
A. Sidi Yekhlef	
R. Travis* (Secretary)	
K. C. Wu	
(* non-voting)	

Visitors
D. Holmes
D. Lederle
A. Nicoletti
D. Phillips
T. Tallerico
R. Than
J. Tuozzolo

Agenda:

1. **Energy Recovery Linac Cryo System Review**

Minutes of Meeting: Appended on pages 2 through 6.

ESH COMMITTEE MINUTES APPROVED:

Signature on File	**06/20/06**	**Signature on File**	**06/20/06**
E. Lessard	**Date**	**J. Tarpinian**	**Date**
LESHC Chairperson		**ESH&Q ALD**	

Chairperson E. Lessard called this meeting of the Laboratory Environmental Safety and Health Committee (LESHC) to order on May 18, 2006 at 2:10 p.m.

1. **Energy Recovery Linac Cryo System Review:** A. Nicoletti presented the proposed Cryogenic System for the Energy Recovery Linac [1].
   1.1. Mr. Nicoletti and other attendees made the following points during the course of the presentation and in response to specific Committee questions:
      1.1.1. The 50 MeV Energy Recovery Linac (ERL) is a stand-alone electron accelerator that is slated for Building 912. Operation is planned for the 2009 timeframe.
         1.1.1.1. In preparation for operations, the ERL will be subject to the reviews as prescribed by the SBMS Accelerator Safety Subject Area.
         1.1.1.2. The LESHC will review the Safety Assessment Document and the Accelerator Safety Envelope.
      1.1.2. Several components will be tested in the immediate future, in support of ERL operations. These are:
         1.1.2.1. The 5 Cell Cavity, which is scheduled for cool down in about 6 months.
         1.1.2.2. The 700 MHz Superconducting Radiofrequency (SCRF) Gun is scheduled to operate in about 18 months.
         1.1.2.3. The 1.3 GHz SCRF Gun, formerly located in Bldg. 939, will be used in parallel with the 5 Cell Cavity at some point in the future.
      1.1.3. Although a refrigerator will eventually be installed, near term operation of these components will require LHe supply dewars.
         1.1.3.1. Until the refrigerator is installed, only one of these three components will be operating cold at any time.
      1.1.4. This review addresses the 5 Cell Cavity. The other components will be the subject of separate LESHC reviews.
      1.1.5. A 500 liter LHe dewar is used to fill the 5 Cell Cavity. It is only connected during filling. The total LHe inventory for the cavity and ballast tank is 750 liters. Another 250 liter LHe dewar supplies the 5k heat shield. Liquid nitrogen (LN2) for the LN2 heat shield is supplied by a buggy located outside the building.
         1.1.5.1. The 250 liter dewar is wheeled into position from the exterior of the building. This dewar lasts ~ 16 hours. For a typical run, the dewar will be replaced once.
      1.1.6. Relief valves are provided to protect components and all trapped volumes from over pressurization.
         1.1.6.1. The relief valves and rupture disks are located on the protected equipment. With the exception of one small volume, discharges are vented outside the block house.
         1.1.6.2. From an over pressurization perspective, the critical components are the convolutions in the 5 Cell Cavity itself.

[1] The presentations, these Minutes and the referenced documents herein are posted at: http://www.rhichome.bnl.gov/AGS/Accel/SND/laboratory_environment,_safety_and_health_committee.htm.)

1.1.6.2.1. Relief devices are sized for losses of insulating vacuum and beam tube vacuum.

1.1.6.2.2. The relief valves will be set (at ~ 13 psi) to protect this component. A back up rupture disk (~15 psi) is also provided. From an operational perspective, C-AD acknowledged that both devices would probably actuate, given the similar relief setpoints.

1.1.6.3. C-AD presented a "Pressure Ratings" Table comparing component Maximum Allowable Working Pressures (MAWP) with relief valve setpoints.

1.1.6.3.1. The Committee noted that the Code requirement is that relief devices limit pressure rise to 110% of MAWP under the worst conditions. C-AD was requested to verify the relief valves meet the Code requirement and enter this information into the project documentation.

1.1.6.3.2. C-AD was also requested to provide the associated volume that each relief valve protects.

1.1.7. One failure mode, "RF Energy dumped into the Cryo System", was discussed at length. Although the 25 Kw RF energy is continuous, the relief capacity is based on only a small energy release, on the order of joules. It could not be determined at the meeting how much energy is actually stored in the cavity. Committee Member W. Glenn agreed to clarify this potential issue.

1.1.7.1. **5/22/06 ADDENDUM:** W. Glenn discussed the RF Cavity stored energy question with I. Ben-Zvi. The large power of the RF drive is mostly wasted in a dump as a method to broaden the frequency response. The stored energy in the RF Cavity is indeed only about 40 joules and thus is not relevant to sizing the relief valves. **This Action is Complete.**

1.1.8. The ballast tank is mounted above the 5 Cell Cavity. It provides extended run times at 2k. The stress analyses for the Support Stand and the Lifting Lugs were discussed.

1.1.8.1. The design Ballast Tank Support Stand has been modified and the finite element analysis (FEA) that was provided to the Committee does not model these changes. C-AD agreed to provide the revised FEA to the Committee.

1.1.8.2. The "Lifting Lugs, Ballast Tank Assembly" ANSYS analysis conservatively assumes the total weight of the tank is borne by one of four lugs and calculates a 17.8 ksi maximum stress in the lug. The Committee noted the ASME Code addresses lifting lugs for pressure vessels and requested a comparison of the ANSYS results to ASME allowables.

1.1.8.3. The vendor stress calculations (e.g., for the lifting lugs) has been independently checked. C-AD agreed to document this review with a memo.

1.1.9. The 5 Cell Cavity FEA was presented. The cavity is evacuated and contained in a pressurized liquid helium vessel. The ANSYS calculation

assumed 44.1 psid acting externally on the cavity and resulted in a predicted stress greater than yield.

1.1.9.1. Based on the FEA and a project-established allowable niobium yield stress of 2/3 of yield, the LHe pressure will be limited to ~ 26 psid across the Cavity, or ~ 11.3 psig. (Note: The relief valve setpoints are preliminary, nominal values.)

1.1.9.2. The Cavity geometry resembles a bellows. The Committee Members noted that "squirm" is relevant for internally pressurized bellows, as opposed to the externally pressurized configuration of this cavity. With regard to buckling, the cavity is well supported with three radial straps and is extremely stiff as pressure induced changes in Cavity geometry will impact RF operation.

1.1.9.3. The applicability of the ASME B&PV Code to the 5 Cell Cavity was discussed. The Committee requested C-AD to determine if the Cavity material is addressed in the Code.

1.1.9.4. There was some concern about the number of 5 Cell Cavity cool down cycles and the potential for fatigue failure. The Committee noted that the Cavity will be kept continuously cold when the helium refrigerator is added to the system. C-AD was requested to determine the maximum number of cool down cycles that is allowable.

1.1.10. The Oxygen Deficiency Analyses for the Block House and the Pump Room was presented.

1.1.10.1. Until the refrigerator is installed, only one of the three components (5 Cell Cavity, 700 MHz SCRF Gun or the 1.3 GHz Gun) will be cold at any one time.

1.1.10.2. The ODH information presented was essentially a summary of results. Detailed information was not available at the meeting.

1.1.10.3. C-AD was requested to provide the underlying ODH calculations. Committee Members Woody Glenn and K.C. Wu agreed to review the calculations.

1.1.11. The 700 MHz and the 1.3 GHz Superconducting Radiofrequency (SCRF) Guns were briefly discussed during the course of the presentation. These components will be presented for LESHC review prior to component cooldown.

1.1.11.1. The 700 MHz Gun is still in the early phases of the design process.

1.1.11.2. The 1.3 GHz Gun was formerly located in Building 939. The Gun is unmodified, but the associated RF cryostat has been changed to a top loading design.

1.1.11.3. The RF cryostat has been designed to the ASME Code. There was considerable discussion among Committee Members about the need to ASME stamp this vessel, and whether the industry has the credentials/capability to do this.

1.1.11.4. In support of a future LESHC review of the 1.3 GHz SCRF Gun, C-AD was requested to determine if the RF Cryostat is required to meet the ASME Code, i.e., minimum dimensions and/or volume are exceeded. See also 1.3 (below) for related discussion.

1.2. The following motion was crafted by the Committee:

1.2.1. The Committee approves the cryogenic testing of the 5 Cell Cavity in the Building 912 Blockhouse subject to the following conditions:

1.2.1.1. Develop and maintain a Documentation File for this project. **OPEN – In progress (7/31/07): C-AD**

1.2.1.2. Verify the relief valves meet the Code requirement and enter this information into the project documentation. (See 1.1.6.3 above.) **OPEN – In Progress (7/15/07) C-AD**

1.2.1.3. Provide (for Committee information) the associated volume that each relief valve protects. (See 1.1.6.3.) **OPEN – In progress (7/15/07): C-AD**

1.2.1.4. Provide the Finite Elements Analysis for the revised ERL Ballast Tank Support Structure to the Committee. (See 1.1.8.) **COMPLETED– analysis provided in Y. Than 4/27/07 email attachment (010604026 CAL-01*.pdf)**

1.2.1.5. Provide a comparison of the ANSYS results to ASME allowables for the Ballast Tank Lifting Lugs. (See 1.1.8.) **COMPLETED – comparison provided in Y. Than 4/27/07 email attachment (010604026 CAL-01*.pdf)**

1.2.1.6. Provide a memo certifying that the vendor calculations were checked by C-AD. (See 1.1.8.) **COMPLETED – memo provided in Y. Than 4/27/07 email attachment (010604026-QAR-01.pdf)**

1.2.1.7. Determine if the 5 Cell Cavity material is addressed in the ASME B&PV Code. (See 1.1.9.) **COMPLETED – Material is not in the Code; documentation provided in Y. Than email 5/2/07 attachment (A03G00001-QAR-01.pdf)**

1.2.1.8. Determine the maximum number of cool down cycles for the 5 Cell Cavity that is allowable. (See 1.1.9.) **OPEN – In progress, 7/31/07: C-AD**

1.2.1.9. Provide the detailed ODH calculations for Committee review. (See 1.1.10.) **OPEN – In progress, 7/31/07: C-AD**

1.2.1.10. Provide 5 Cell Cavity Cryogenic operating procedures (e.g., system cool down, pump operations, dewar swapping, etc.) for Committee review. **OPEN – In progress, 7/31/07: C-AD**

1.2.2. W. Glenn made a recommendation for approval of the Motion.

1.2.3. Seconded by S. Kane.

1.2.4. The motions were approved by vote of 6 in favor and none opposed.

1.3. The impending regulation of DOE contractors under 10CFR851, which incorporates American Society of Mechanical Engineers (ASME) Boiler and Pressure Vessel Code (2004), sections I through section XII including applicable Code Cases, prompted much Committee discussion throughout this meeting. The Committee debated the applicability of the ASME Boiler and Pressure Vessel Code requirements to the Five Cell Cavity and the Ballast Tank. This is a significant concern, as it potentially affects most of the cryogenic equipment on site. The Committee Secretary will schedule a separate meeting to: examine the

requirements of 10CFR851, determine applicability to cryogenic equipment and advise Laboratory Management of potential areas of non compliance. **ACTION COMPLETE**

2. The Meeting was adjourned at 4:08 p.m.

ACTION ITEM STATUS - 5/9/07

Laboratory Environment Safety and Health Committee
Cryogenic Safety Subcommittee

MINUTES OF MEETING 06-06

May 18, 2006

Final

Committee Members Present	Committee Members Absent
W. Glenn	R. Alforque
S. Kane	P. Mortazavi
E. Lessard (Chairperson)	
M. Rehak	
A. Sidi Yekhlef	
R. Travis* (Secretary)	
K. C. Wu	
(* non-voting)	

Visitors
D. Holmes
D. Lederle
A. Nicoletti
D. Phillips
T. Tallerico
R. Than
J. Tuozzolo

Agenda:

1. **Energy Recovery Linac Cryo System Review**

Minutes of Meeting: Appended on pages 2 through 6.

ESH COMMITTEE MINUTES APPROVED:

Signature on File	**06/20/06**	**Signature on File**	**06/20/06**
E. Lessard	**Date**	**J. Tarpinian**	**Date**
LESHC Chairperson		**ESH&Q ALD**	

Chairperson E. Lessard called this meeting of the Laboratory Environmental Safety and Health Committee (LESHC) to order on May 18, 2006 at 2:10 p.m.

1. **Energy Recovery Linac Cryo System Review:** A. Nicoletti presented the proposed Cryogenic System for the Energy Recovery Linac [1].
   1.1. Mr. Nicoletti and other attendees made the following points during the course of the presentation and in response to specific Committee questions:
      1.1.1. The 50 MeV Energy Recovery Linac (ERL) is a stand-alone electron accelerator that is slated for Building 912. Operation is planned for the 2009 timeframe.
         1.1.1.1. In preparation for operations, the ERL will be subject to the reviews as prescribed by the SBMS Accelerator Safety Subject Area.
         1.1.1.2. The LESHC will review the Safety Assessment Document and the Accelerator Safety Envelope.
      1.1.2. Several components will be tested in the immediate future, in support of ERL operations. These are:
         1.1.2.1. The 5 Cell Cavity, which is scheduled for cool down in about 6 months.
         1.1.2.2. The 700 MHz Superconducting Radiofrequency (SCRF) Gun is scheduled to operate in about 18 months.
         1.1.2.3. The 1.3 GHz SCRF Gun, formerly located in Bldg. 939, will be used in parallel with the 5 Cell Cavity at some point in the future.
      1.1.3. Although a refrigerator will eventually be installed, near term operation of these components will require LHe supply dewars.
         1.1.3.1. Until the refrigerator is installed, only one of these three components will be operating cold at any time.
      1.1.4. This review addresses the 5 Cell Cavity. The other components will be the subject of separate LESHC reviews.
      1.1.5. A 500 liter LHe dewar is used to fill the 5 Cell Cavity. It is only connected during filling. The total LHe inventory for the cavity and ballast tank is 750 liters. Another 250 liter LHe dewar supplies the 5k heat shield. Liquid nitrogen (LN2) for the LN2 heat shield is supplied by a buggy located outside the building.
         1.1.5.1. The 250 liter dewar is wheeled into position from the exterior of the building. This dewar lasts ~ 16 hours. For a typical run, the dewar will be replaced once.
      1.1.6. Relief valves are provided to protect components and all trapped volumes from over pressurization.
         1.1.6.1. The relief valves and rupture disks are located on the protected equipment. With the exception of one small volume, discharges are vented outside the block house.
         1.1.6.2. From an over pressurization perspective, the critical components are the convolutions in the 5 Cell Cavity itself.

[1] The presentations, these Minutes and the referenced documents herein are posted at: http://www.rhichome.bnl.gov/AGS/Accel/SND/laboratory_environment,_safety_and_health_committee.htm.)

1.1.6.2.1. Relief devices are sized for losses of insulating vacuum and beam tube vacuum.

1.1.6.2.2. The relief valves will be set (at ~ 13 psi) to protect this component. A back up rupture disk (~15 psi) is also provided. From an operational perspective, C-AD acknowledged that both devices would probably actuate, given the similar relief setpoints.

1.1.6.3. C-AD presented a "Pressure Ratings" Table comparing component Maximum Allowable Working Pressures (MAWP) with relief valve setpoints.

1.1.6.3.1. The Committee noted that the Code requirement is that relief devices limit pressure rise to 110% of MAWP under the worst conditions. C-AD was requested to verify the relief valves meet the Code requirement and enter this information into the project documentation.

1.1.6.3.2. C-AD was also requested to provide the associated volume that each relief valve protects.

1.1.7. One failure mode, "RF Energy dumped into the Cryo System", was discussed at length. Although the 25 Kw RF energy is continuous, the relief capacity is based on only a small energy release, on the order of joules. It could not be determined at the meeting how much energy is actually stored in the cavity. Committee Member W. Glenn agreed to clarify this potential issue.

1.1.7.1. **5/22/06 ADDENDUM:** W. Glenn discussed the RF Cavity stored energy question with I. Ben-Zvi. The large power of the RF drive is mostly wasted in a dump as a method to broaden the frequency response. The stored energy in the RF Cavity is indeed only about 40 joules and thus is not relevant to sizing the relief valves. **This Action is Complete.**

1.1.8. The ballast tank is mounted above the 5 Cell Cavity. It provides extended run times at 2k. The stress analyses for the Support Stand and the Lifting Lugs were discussed.

1.1.8.1. The design Ballast Tank Support Stand has been modified and the finite element analysis (FEA) that was provided to the Committee does not model these changes. C-AD agreed to provide the revised FEA to the Committee.

1.1.8.2. The "Lifting Lugs, Ballast Tank Assembly" ANSYS analysis conservatively assumes the total weight of the tank is borne by one of four lugs and calculates a 17.8 ksi maximum stress in the lug. The Committee noted the ASME Code addresses lifting lugs for pressure vessels and requested a comparison of the ANSYS results to ASME allowables.

1.1.8.3. The vendor stress calculations (e.g., for the lifting lugs) has been independently checked. C-AD agreed to document this review with a memo.

1.1.9. The 5 Cell Cavity FEA was presented. The cavity is evacuated and contained in a pressurized liquid helium vessel. The ANSYS calculation

assumed 44.1 psid acting externally on the cavity and resulted in a predicted stress greater than yield.

1.1.9.1. Based on the FEA and a project-established allowable niobium yield stress of 2/3 of yield, the LHe pressure will be limited to ~ 26 psid across the Cavity, or ~ 11.3 psig. (Note: The relief valve setpoints are preliminary, nominal values.)

1.1.9.2. The Cavity geometry resembles a bellows. The Committee Members noted that "squirm" is relevant for internally pressurized bellows, as opposed to the externally pressurized configuration of this cavity. With regard to buckling, the cavity is well supported with three radial straps and is extremely stiff as pressure induced changes in Cavity geometry will impact RF operation.

1.1.9.3. The applicability of the ASME B&PV Code to the 5 Cell Cavity was discussed. The Committee requested C-AD to determine if the Cavity material is addressed in the Code.

1.1.9.4. There was some concern about the number of 5 Cell Cavity cool down cycles and the potential for fatigue failure. The Committee noted that the Cavity will be kept continuously cold when the helium refrigerator is added to the system. C-AD was requested to determine the maximum number of cool down cycles that is allowable.

1.1.10. The Oxygen Deficiency Analyses for the Block House and the Pump Room was presented.

1.1.10.1. Until the refrigerator is installed, only one of the three components (5 Cell Cavity, 700 MHz SCRF Gun or the 1.3 GHz Gun) will be cold at any one time.

1.1.10.2. The ODH information presented was essentially a summary of results. Detailed information was not available at the meeting.

1.1.10.3. C-AD was requested to provide the underlying ODH calculations. Committee Members Woody Glenn and K.C. Wu agreed to review the calculations.

1.1.11. The 700 MHz and the 1.3 GHz Superconducting Radiofrequency (SCRF) Guns were briefly discussed during the course of the presentation. These components will be presented for LESHC review prior to component cooldown.

1.1.11.1. The 700 MHz Gun is still in the early phases of the design process.

1.1.11.2. The 1.3 GHz Gun was formerly located in Building 939. The Gun is unmodified, but the associated RF cryostat has been changed to a top loading design.

1.1.11.3. The RF cryostat has been designed to the ASME Code. There was considerable discussion among Committee Members about the need to ASME stamp this vessel, and whether the industry has the credentials/capability to do this.

1.1.11.4. In support of a future LESHC review of the 1.3 GHz SCRF Gun, C-AD was requested to determine if the RF Cryostat is required to meet the ASME Code, i.e., minimum dimensions and/or volume are exceeded. See also 1.3 (below) for related discussion.

1.2. The following motion was crafted by the Committee:

1.2.1. The Committee approves the cryogenic testing of the 5 Cell Cavity in the Building 912 Blockhouse subject to the following conditions:

1.2.1.1. Develop and maintain a Documentation File for this project. **OPEN – In progress (7/31/07): C-AD**

1.2.1.2. Verify the relief valves meet the Code requirement and enter this information into the project documentation. (See 1.1.6.3 above.) **OPEN – In Progress (7/15/07) C-AD**

1.2.1.3. Provide (for Committee information) the associated volume that each relief valve protects. (See 1.1.6.3.) **OPEN – In progress (7/15/07): C-AD**

1.2.1.4. Provide the Finite Elements Analysis for the revised ERL Ballast Tank Support Structure to the Committee. (See 1.1.8.) **COMPLETED– analysis provided in Y. Than 4/27/07 email attachment (010604026 CAL-01*.pdf)**

1.2.1.5. Provide a comparison of the ANSYS results to ASME allowables for the Ballast Tank Lifting Lugs. (See 1.1.8.) **COMPLETED – comparison provided in Y. Than 4/27/07 email attachment (010604026 CAL-01*.pdf)**

1.2.1.6. Provide a memo certifying that the vendor calculations were checked by C-AD. (See 1.1.8.) **COMPLETED – memo provided in Y. Than 4/27/07 email attachment (010604026-QAR-01.pdf)**

1.2.1.7. Determine if the 5 Cell Cavity material is addressed in the ASME B&PV Code. (See 1.1.9.) **COMPLETED – Material is not in the Code; documentation provided in Y. Than email 5/2/07 attachment (A03G00001-QAR-01.pdf)**

1.2.1.8. Determine the maximum number of cool down cycles for the 5 Cell Cavity that is allowable. (See 1.1.9.) **OPEN – In progress, 7/31/07: C-AD**

1.2.1.9. Provide the detailed ODH calculations for Committee review. (See 1.1.10.) **OPEN – In progress, 7/31/07: C-AD**

1.2.1.10. Provide 5 Cell Cavity Cryogenic operating procedures (e.g., system cool down, pump operations, dewar swapping, etc.) for Committee review. **OPEN – In progress, 7/31/07: C-AD**

1.2.2. W. Glenn made a recommendation for approval of the Motion.

1.2.3. Seconded by S. Kane.

1.2.4. The motions were approved by vote of 6 in favor and none opposed.

1.3. The impending regulation of DOE contractors under 10CFR851, which incorporates American Society of Mechanical Engineers (ASME) Boiler and Pressure Vessel Code (2004), sections I through section XII including applicable Code Cases, prompted much Committee discussion throughout this meeting. The Committee debated the applicability of the ASME Boiler and Pressure Vessel Code requirements to the Five Cell Cavity and the Ballast Tank. This is a significant concern, as it potentially affects most of the cryogenic equipment on site. The Committee Secretary will schedule a separate meeting to: examine the

requirements of 10CFR851, determine applicability to cryogenic equipment and advise Laboratory Management of potential areas of non compliance. **ACTION COMPLETE**

2. The Meeting was adjourned at 4:08 p.m.

C-A D Engineering Design Support Documentation Cover Page

Document number: 010604026 QAR-01	
Title: Certification Memo ERL Ballast Tank Support Frame and lifting lugs	**Author**: Y. R. Than
Subject:	
C-A Department Group: Cryogenic Systems Group	**Approval**: D. Lederle
Documentation Type **[ ] Written Technical Paper** **[ ] Design Calculations** **[ ] Design Review Presentation** **[x] Design Certification** **[ ] Specification** **[ ] Procurement Documentation** **[ ] Safety/ALARA Review Presentation** Other	**Equipment Type** **[ ] Magnets and Power Supplies** **[ ] Vacuum Systems** **[ ] RF Systems** **[x] Cryogenic Systems** **[ ] Experimental Equipment** **[ ] Beam Instrumentation** **[ ] Water Systems** **[ ] Buildings, Structures, and Shielding** Other
Equipment Location:	**Associated information for cataloging**
[ ] Tandem Van DeGraff	[ ] CA-D Design Room Job No.
[ ] Linac	
[ ] Booster	[ ] CA-D Design Room Drawing No 010604026
[ ] AGS	
[ ] RHIC	[ ] CA-D Specification No
[ ] 912 Experimental Area	
[ ] 919 Experimental Area	[ ] CA-D Experiment No.
[ ] RHIC Experimental Area	
	[ ] Other
[ ] Buildings Structures, and Shielding	
Other ERL	

MEMO

SUPPORT FRAME
This certifies that the ERL Ballast tank support frame has been analyzed for strength and is safe to take the weight of the tank.

LIFTING LUGS
This certifies that the ERL Ballast tank's lifting lugs have been analyzed for strength and that the factor of safety is less than 3, and therefore will not be used for lifting of the tank.
The tank will be lifted using lifting straps with a spreader beam.

C-A D Engineering Design Support Documentation Cover Page

Document number: 010604026 CAL-01	
Title: ERL Ballast Tank Frame and Lifting lugs	**Author**: C.J. Liaw
Subject:	
C-A Department Group: Cryogenic Systems Group	**Approval**: Y. R.. Than
Documentation Type **[ ] Written Technical Paper** **[x] Design Calculations** **[ ] Design Review Presentation** **[ ] Design Certification** **[ ] Specification** **[ ] Procurement Documentation** **[ ] Safety/ALARA Review Presentation** Other	**Equipment Type** **[ ] Magnets and Power Supplies** **[ ] Vacuum Systems** **[ ] RF Systems** **[x] Cryogenic Systems** **[ ] Experimental Equipment** **[ ] Beam Instrumentation** **[ ] Water Systems** **[ ] Buildings, Structures, and Shielding** Other
Equipment Location:	**Associated information for cataloging**
[ ] Tandem Van DeGraff	**[ ]** CA-D Design Room Job No.
[ ] Linac	
[ ] Booster	**[ ]** CA-D Design Room Drawing No 010604026 and 0010604001
[ ] AGS	
[ ] RHIC	**[ ]** CA-D Specification No
[x] 912 Experimental Area	
[ ] 919 Experimental Area	**[ ]** CA-D Experiment No.
[ ] RHIC Experimental Area	
	[ ] Other
[ ] Buildings Structures, and Shielding	
Other	

ERL Ballast Tank Support Stand and Lifting Lug Stress Analysis

(1) The Ballast tank support stand:

Weight of the tank: 1415 lbf
Young's modulus: 30 x 10^6 psi
Yielding stress of steel: 30000 psi (at room temperature)
Density of steel: 0.3 lb/in^3
Fillet weld at joints: .25" x .25"
Sectional properties of the square tubing and the I-beam are shown in Table 1.

The ballast tank will be installed on the support stand as shown in Fig. 1. The support stand was first modeled with Beam elements (using ANSYS) to determine the maximum stress (and the location) and the maximum deformation in the structure due to the structure and the tank weight. A more detailed model, with 3D solid elements, was then used to model the local geometry at the location where the maximum stress occurred to determine the stress in the weldment as well as in the structure member. .

With the structure modeled with the beam elements, the analysis results show that the maximum stress in the structure is 1527 psi (see Fig. 2) and the maximum deformation in the structure is ~.006" (see Fig 3). From the detailed model, the analysis results show that the maximum stress in the weldment at the location, where the maximum stress occurs, is 1718 psi (with a safety factor of 17.5 to yield). This stress is reasonable compared with that by the engineering calculation shown in Appendix 1. The maximum stress estimated by hand calculation is 1794 psi (1718 psi by ANSYS).

The maximum reaction forces in each of the ½" bolts on the foot pad are Fx = 5.2 lbf, Fy = 145.1 lbf, and Fz = 14.5 lbf. The combined stress inside the bolt is 1028 psi (with a safety factor of 29 to the yielding stress).

The critical load to cause structure instability in the 75" long column is around 108400 lbf (the total weight of the tank is only 1415 lbf). Therefore buckling is not an issue for this case.

In conclusion, the support structure is safe to take the weight of the ballast tank.

(2) The lifting lugs:

Weight of the tank: 1415 lbf
Young's modulus: 30 x 10^6 psi (A36) and 28 x 10^6 psi (SST)
Yielding stress of A36 steel (Lug material): 36000 psi
Yielding stress of 304 SST (Tank material): 35000 psi
Density of steel: 0.3 lb/in^3
Fillet weld between the lug and the tank: .25" x .25"

The ballast tank is currently lying on the ground facing on its side. To install the tank onto the stand, one needs to lift the tank off the ground and to carry the tank onto the support stand. There are four lugs pre-welded on the outer shell of the tank (see Fig. 6). The following analysis is to evaluate the stress in the lug and in the weldment when lifting the tank.

Assuming that all the lugs were used to lift the tank (see Fig. 7) and the center of gravity(CG) was located close to the middle of the tank, one eighth of the ballast tank with one lug on it was modeled in ANSYS for the analysis (see Fig. 8). The lifting force on the lug was F = 1415 / (4*cos(35°)) = 432 lbs. The force direction with respect to the lug is shown in Fig. 7. Symmetric boundary conditions were applied to the cutting edges of the model. By limiting the maximum contact stress between the shank and the lug eye hole to 12 kips (a safety factor of 3 to yield), the shank diameter should be 1.496" OD (for the 1.5" eye hole) and the contact length will be .845" along the eye hole of the lug (per Roark and Young's formula). This information was also applied to the ANSYS model for the analysis.

Fig. 9 shows that the maximum stress on the lug is 15875 psi (SF of 2.27 to yield). Fig. 10 shows the stress distribution around the maximum stress area. Fig. 11 shows that the maximum stress on the weldment is 7740 psi (SF of 4.65 to yield). The maximum stress on the lug was also estimated by engineering calculation in Appendix 2. The maximum stress estimated by hand calculation is 15350 psi (15875 psi by ANSYS).

In conclusion, it is safe to lift the weight of the ballast tank by using the four lugs on the tank together.

Table 1: Sectional properties of Support components

Item	A (in^2)	Ix (in^4)	Iy (in^4)
4 x 4 x .25 Square Tubing	3.75	8.83	8.83
W4 x 13 I-Beam	3.83	11.3	3.86

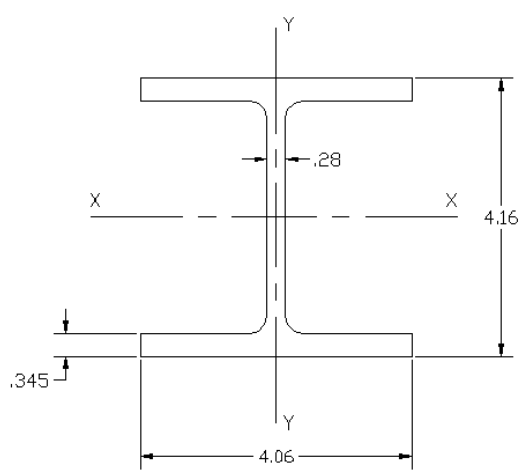

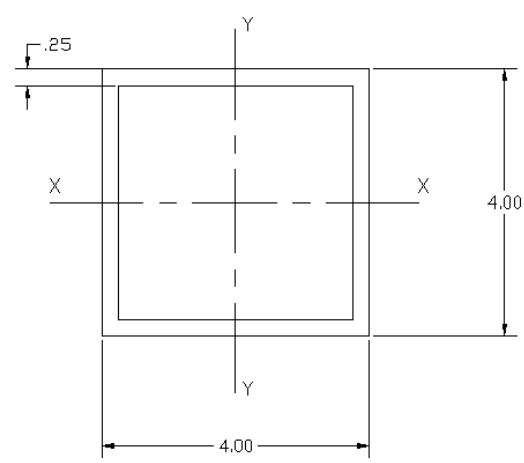

Fig. 1: The Ballast Tank Support Structure

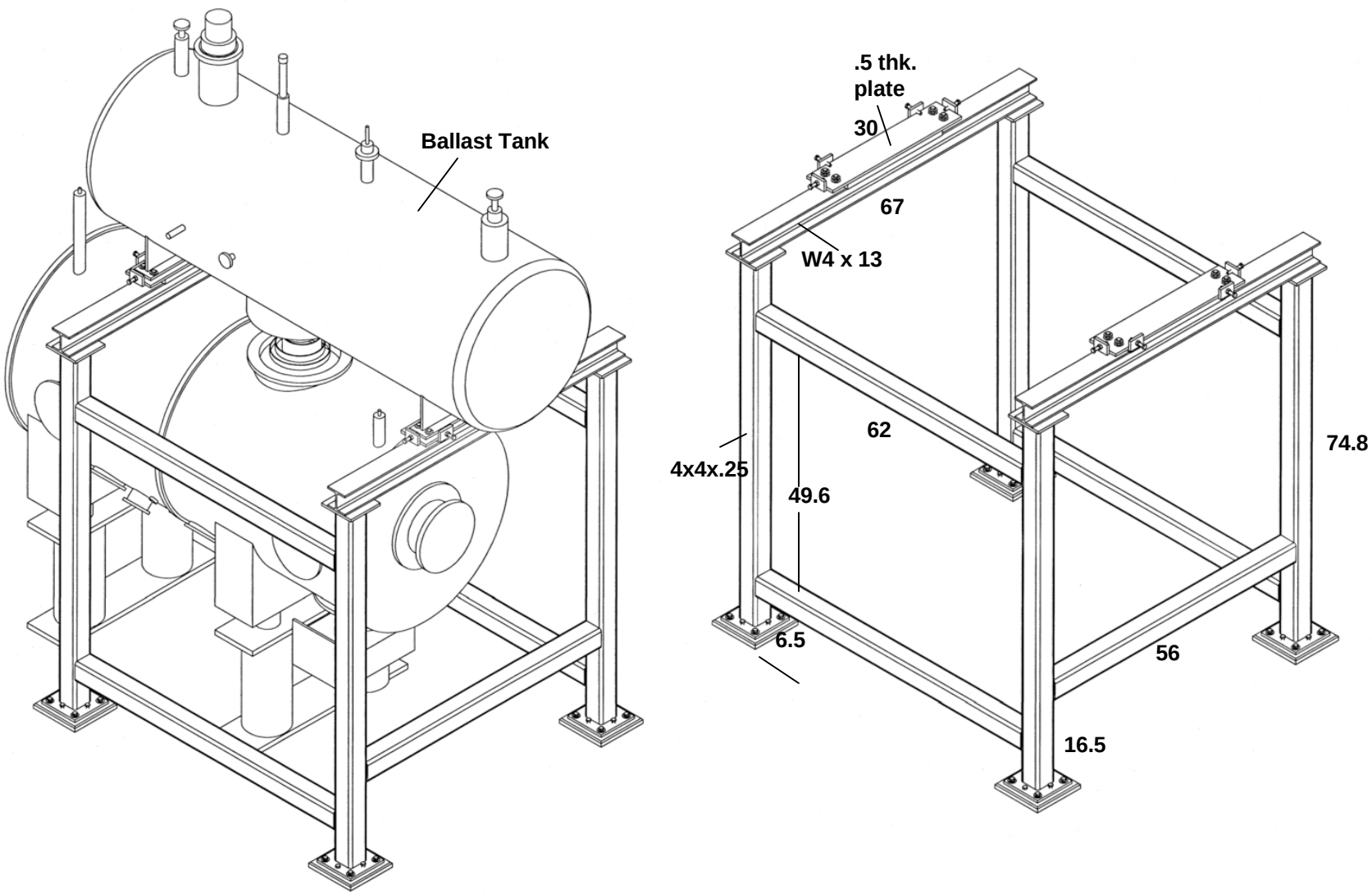

Fig. 2: Maximum stress in the support structure

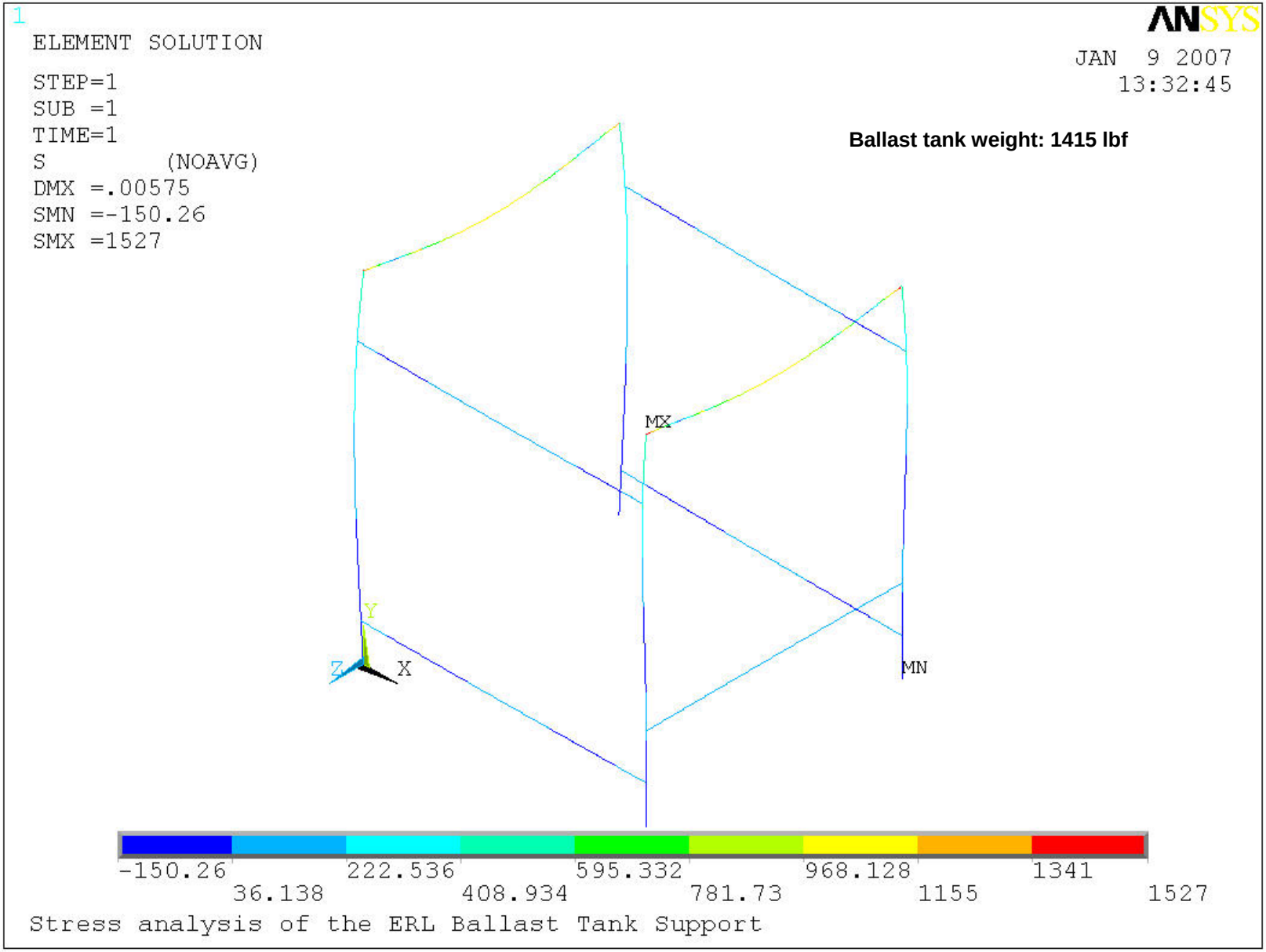

Fig. 3: Deformation of the support structure

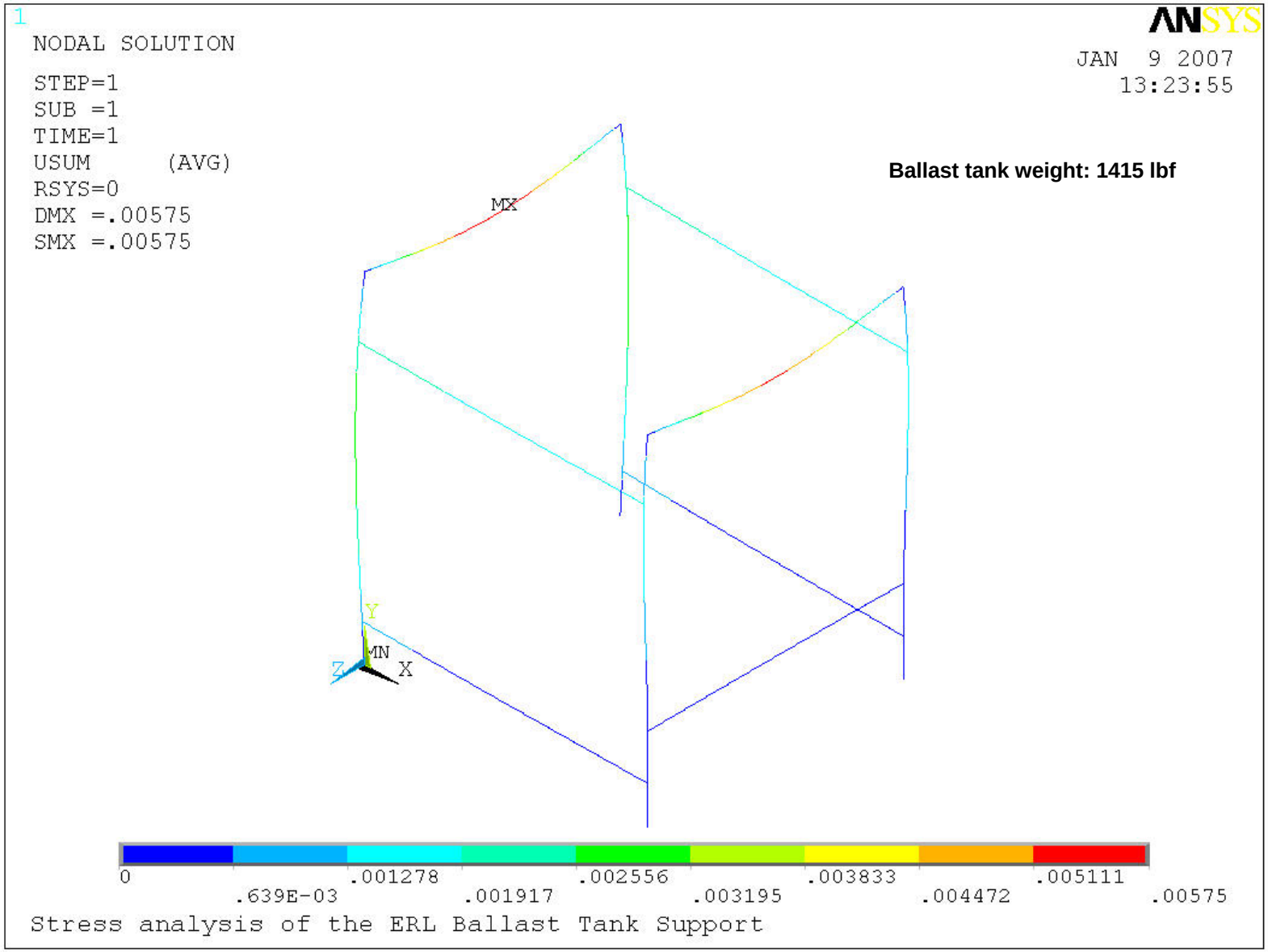

Fig. 4: Stress at the corner where maximum stress occurs (Top view)

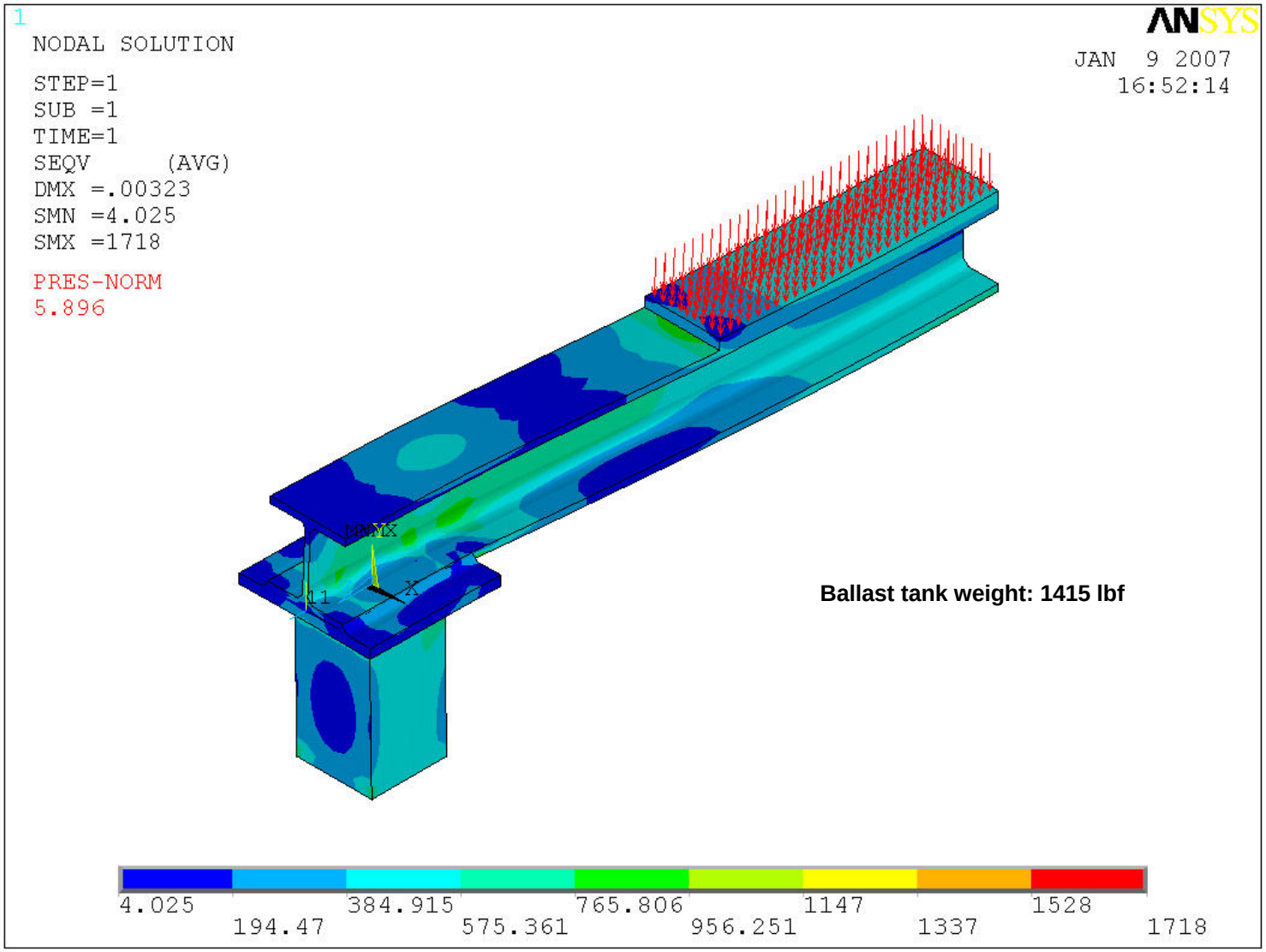

Fig. 5: Stress at the corner where maximum stress occurs (Bottom view)

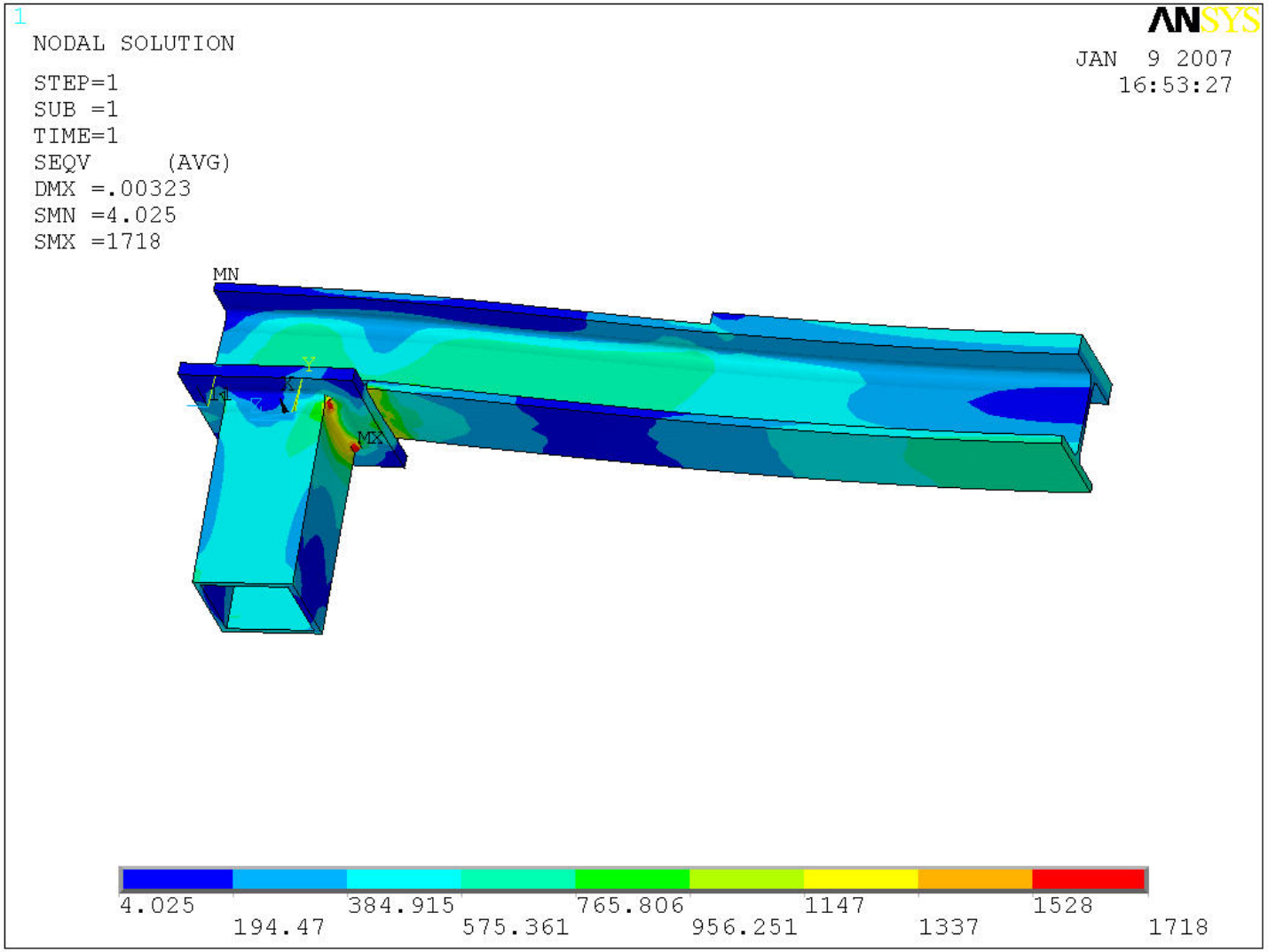

Fig. 6: Dimensions of the ballast tank and the lifting lug

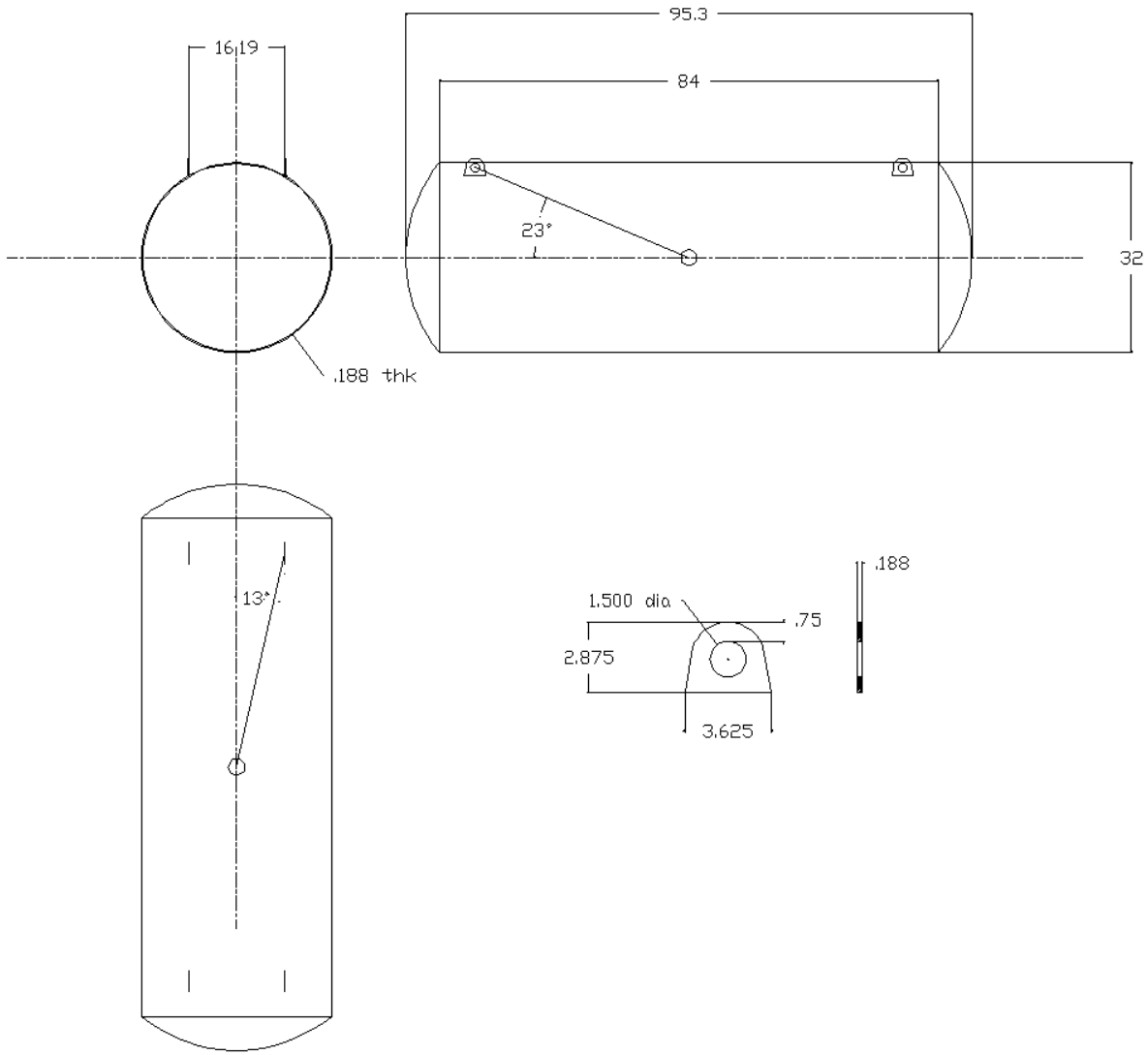

Fig. 7: Lifting the tank using 4 Lugs

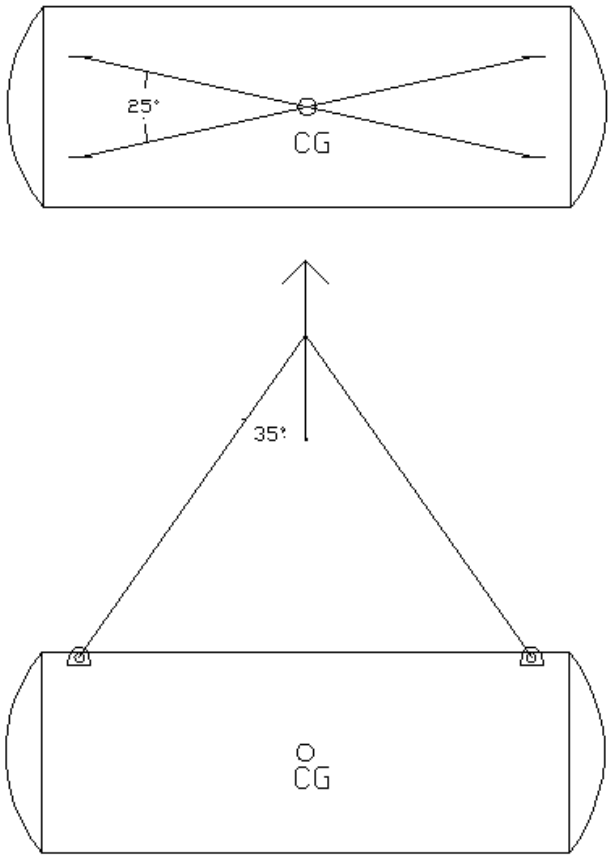

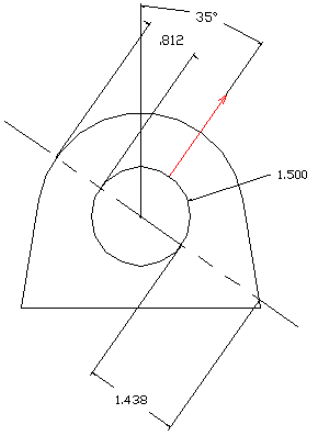

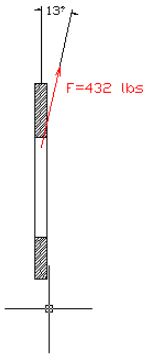

Fig. 8: ANSYS Model of a Lifting Lug On the Ballast Tank

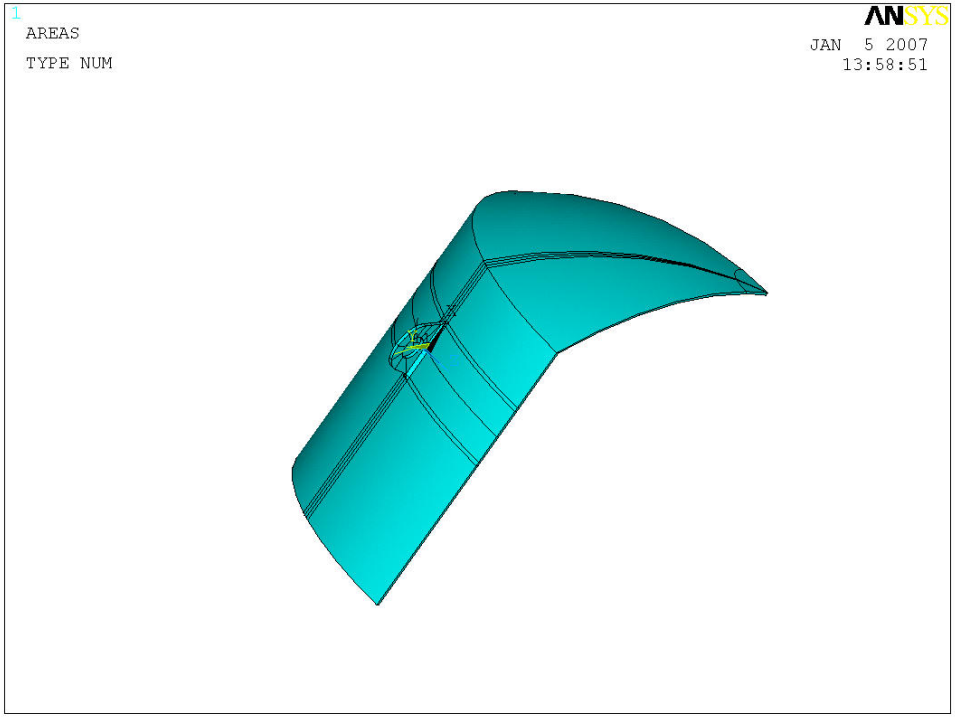

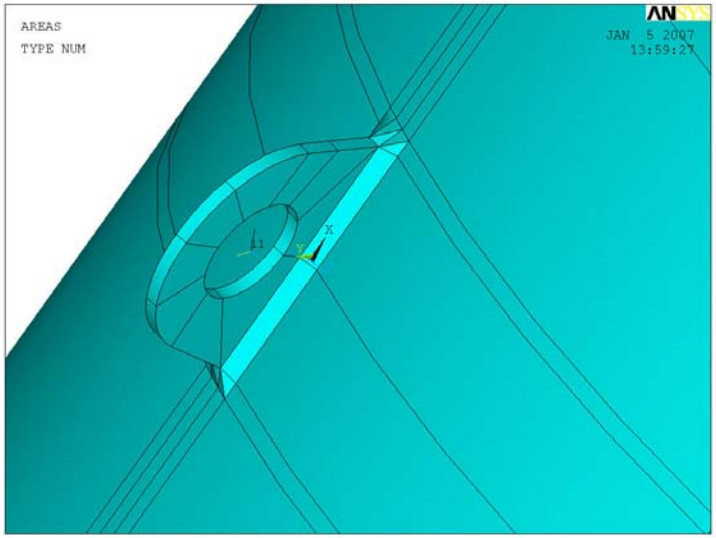

Fig. 9: Stress on the Lug and the Tank (Lifting using four Lugs)

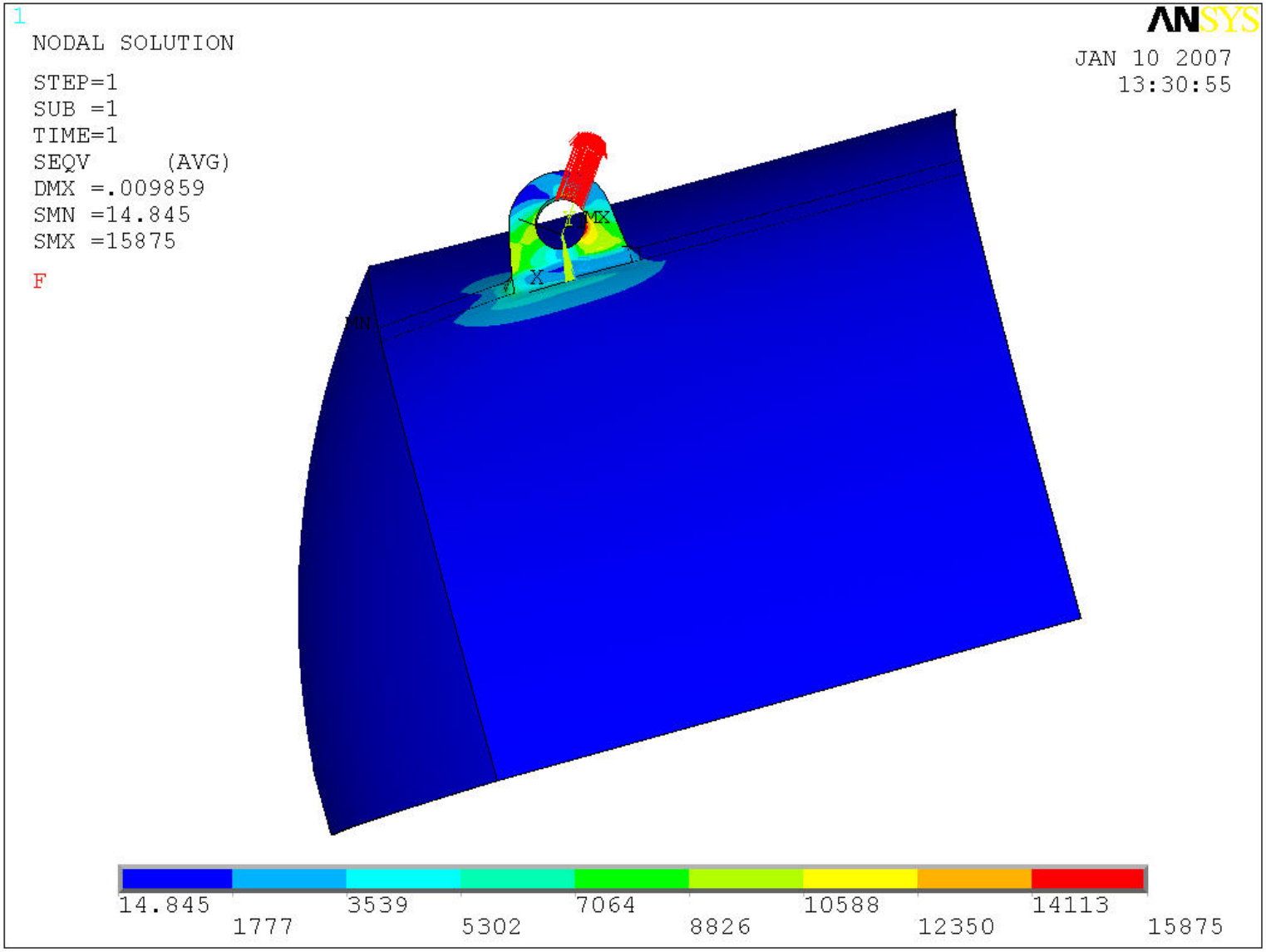

Fig. 10: Stress around the maximum stress area

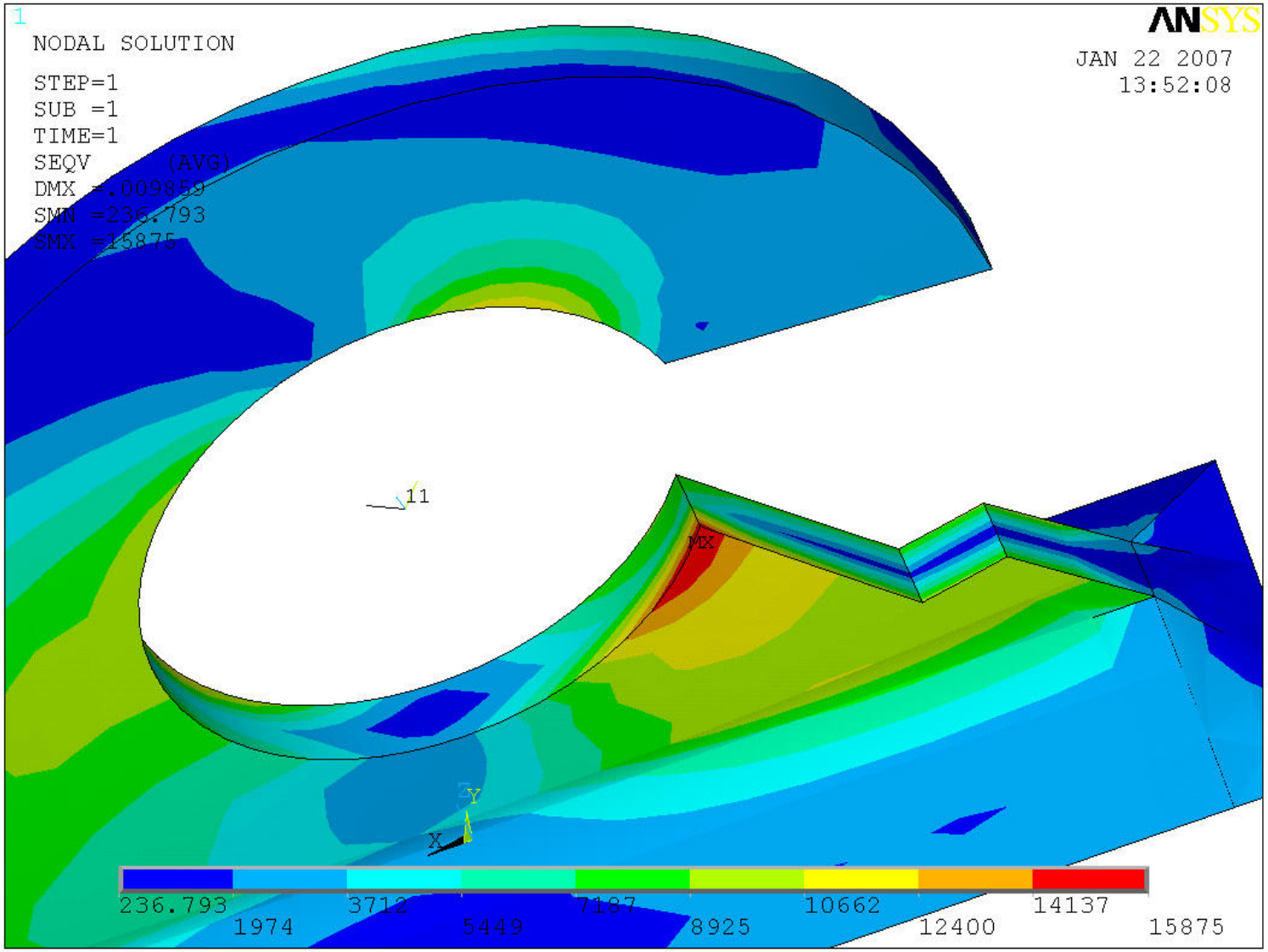

Fig. 11: Stress on the weldment (Lifting using four Lugs)

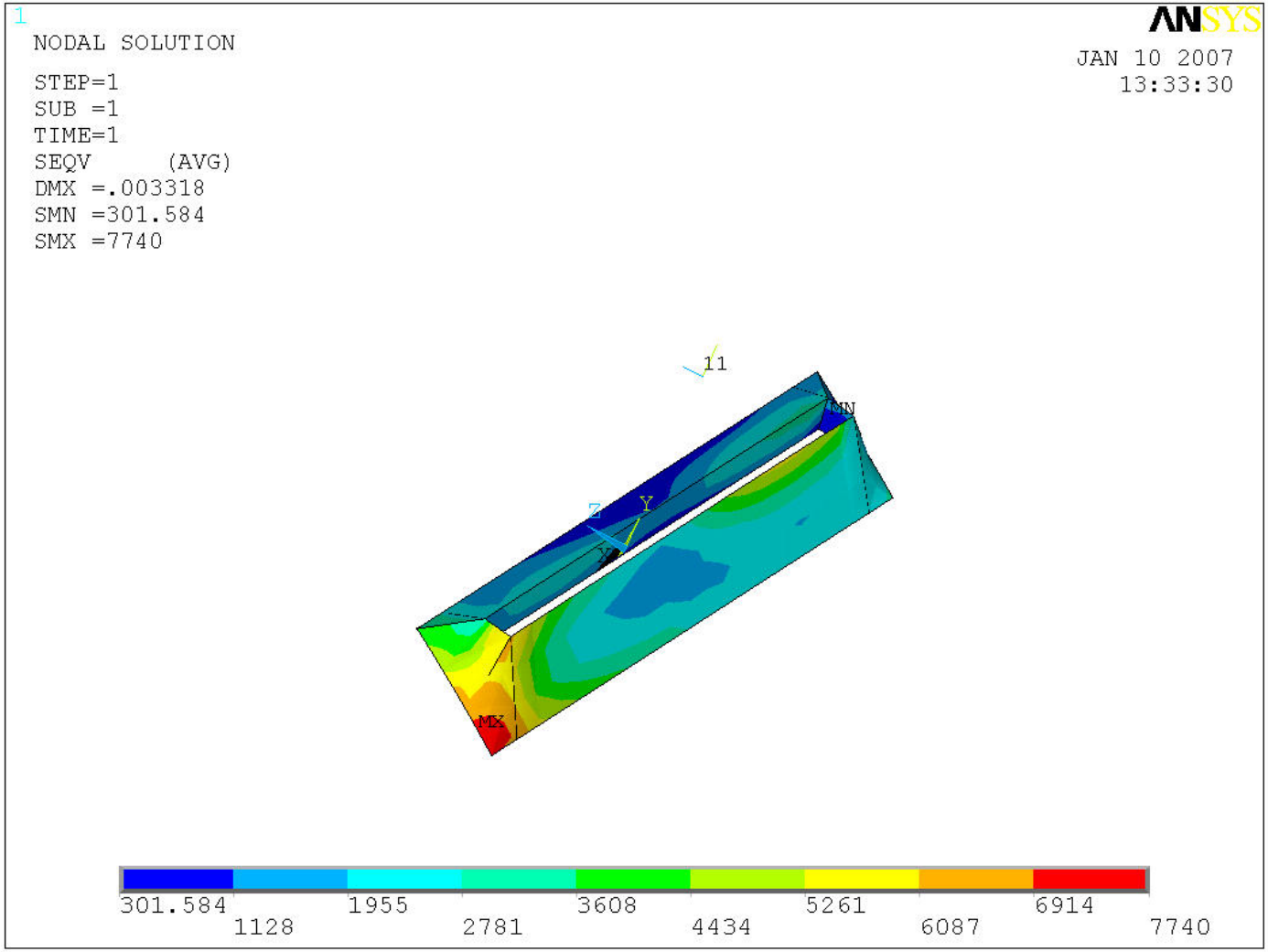

Appendix 1: Stress Analysis of a Beam with Uniform Loading at the Middle Portion

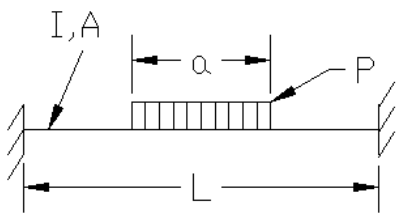

$E := 30 \cdot 10^6$ psi

$I := 11.3$ in^4

$a := 25$ in

$Length := 56$ in $\quad Load := \frac{1415}{2}$ lbs

$p := \frac{Load}{a} \quad p = 28.3 \quad \frac{lbs}{in}$

$y := \frac{4.16}{2}$ in $\quad A := 4 \cdot 25 \cdot 4 \quad y = 2.08$

Case1: Uniform load along the whole length:

$$Ma1 := -p \cdot \frac{Length^2}{12} \qquad Ma1 = -7.396 \cdot 10^3 \quad lbs - in$$

$$Ra1 := p \cdot \frac{Length}{2} \qquad Ra1 = 792.4 \quad lbs$$

Case 2:Uniform load , (L-a)/2 long; right hand side

$$LL1 := \frac{Length + a}{2}$$

$$Ma2 := -p \cdot (Length - LL1)^3 \cdot \frac{(Length + 3 \cdot LL1)}{12 \cdot Length^2} \quad lbs - in$$

$$Ra2 := p \cdot (Length - LL1)^3 \cdot \frac{(Length + LL1)}{2 \cdot Length^3} \quad lbs$$

Case3: Uniform load, (L-a)/2 long, left hand side

$$LL := \frac{Length - a}{2} \qquad LL = 15.5$$

$$Ma3 := -p \cdot LL^2 \cdot \frac{\left(6 \cdot Length^2 - 8 \cdot LL \cdot Length + 3 \cdot LL^2\right)}{12 \cdot Length^2} \quad lbs - in$$

$$Ra3 := p \cdot LL \cdot \frac{\left(2 \cdot Length^3 - 2 \cdot LL^2 \cdot Length + LL^3\right)}{2 \cdot Length^3} \quad lbs$$

Case 1-Case 2-Case3:

$Ma := Ma1 - Ma2 - Ma3$ $\quad Ma = -4.623 \cdot 10^{3}$ $\quad lbs - in$

$Ra := Ra1 - Ra2 - Ra3$ $\quad Ra = 353.75$ $\quad lbs$

Max

$Sig1 := \frac{Ma}{(y + .5) \cdot (.25 \cdot 4)}$ $\quad Sig1 = -1.792 \cdot 10^{3}$ $\quad psi$

$Sig2 := \frac{Ra}{A}$ $\quad Sig2 = 88.437$ $\quad psi$

$Sig := \left(Sig1^{2} + Sig2^{2}\right)^{.5}$ $\quad Sig = 1.794 \cdot 10^{3}$ $\quad psi$

Appendix 2: Estimation of Maximum Stress on the Lug (at Pt. A)

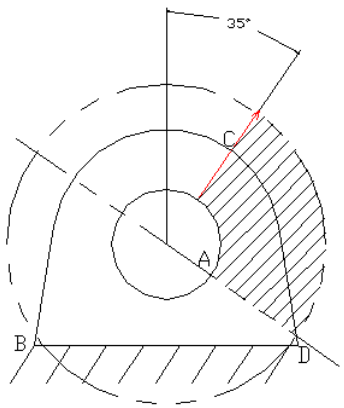

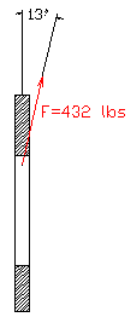

Fig. A1

Considering the shaded portion in Fig. A1 and assuming line AD being fixed, the model can be simpified to Fig. A2.

$F := 432$ lbs

$BC := 4.816$ in (Length of BC)

$CD := 2.881$ in (Length of CD)

The estimated laod on the shaded portion in Fig. A1:

$$P := 432 \cdot \frac{4.816}{(4.816 + 2.881)} \qquad P = 270.302 \quad \text{lbs}$$

$r1 := .75$ in

$r2 := .75 + 1.438 \qquad r2 = 2.188$ in

$h := 1.438$ in

$$r := \frac{(r1 + r2)}{2} \qquad r = 1.469 \quad \text{in}$$

$t := .188$ in

$$h1 := \frac{h}{2} \qquad h1 = 0.719 \quad \text{in}$$

$$A := h \cdot t \qquad A = 0.27 \quad \text{in}^2$$

$$m := \frac{r}{h} \cdot \ln\left(\frac{r2}{r1}\right) - 1 \qquad m = 0.094$$

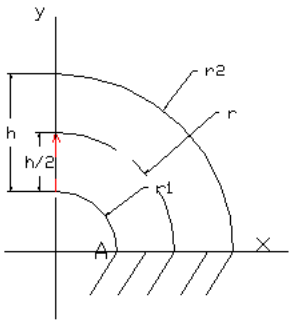

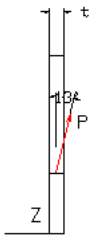

Fig. A2

E:The distance between the neutral bedning axis and the cenetr line of the cross section

$E := m \cdot \frac{r}{(m+1)}$ $\quad E = 0.126$ $\quad$ (Per Timoshenko, "Strength of Materials)")

1. Maximum stress at Pt. A due to in-plane bending:

$Sig1 := P \cdot r \cdot \cos\left(13 \cdot \frac{3.1416}{180}\right) \cdot \frac{(h1 - E)}{A \cdot E \cdot r1}$ $\quad Sig1 = 8.988 \cdot 10^3$ $\quad$ psi

(Per Timoshenko, "Strength of Materials)")

2. Maximum stress at Pt. A due to out of plane bending:

$$Sig2 := P \cdot \frac{r1 \cdot \sin\left(13 \cdot \frac{3.1416}{180}\right) \cdot \left(\frac{t}{2}\right)}{h \cdot \frac{t^3}{12}}$$

$Sig2 = 5.384 \cdot 10^3$ $\quad$ psi

---

3 Normal stress at Pt.A:

$$Sig3 := \frac{P \cdot \cos\left(13 \cdot \frac{3.1416}{180}\right)}{A}$$

$Sig3 = 974.217$ $\quad$ psi

4. Shearing stress at Pt. A:

$$Sig4 := \frac{P \cdot \sin\left(13 \cdot \frac{3.1416}{180}\right)}{A}$$

$Sig4 = 224.916$ $\quad$ psi

The overall maximum stress at Pt A:

$Sig := \left[(Sig1 + Sig2 + Sig3)^2 + Sig4^2\right]^{.5}$ $\quad Sig = 1.535 \cdot 10^4$ $\quad$ psi

C-A D Engineering Design Support Documentation Cover Page

Document number: A03G00001-QAR-01	
Title: MEMO on Cavity Material	**Author**: Y. R. Than
Subject:	
C-A Department Group: Cryogenic Systems Group	**Approval**:
Documentation Type **[ ] Written Technical Paper** **[ ] Design Calculations** **[ ] Design Review Presentation** **[ ] Design Certification** **[ ] Specification** **[ ] Procurement Documentation** **[ ] Safety/ALARA Review Presentation** Other Memo	**Equipment Type** **[ ] Magnets and Power Supplies** **[ ] Vacuum Systems** **[ ] RF Systems** **[ ] Cryogenic Systems** **[ ] Experimental Equipment** **[ ] Beam Instrumentation** **[ ] Water Systems** **[ ] Buildings, Structures, and Shielding** Other
Equipment Location:	**Associated information for cataloging**
[ ] Tandem Van DeGraff	**[ ]** CA-D Design Room Job No.
[ ] Linac	
[ ] Booster	**[ ]** CA-D Design Room Drawing No
[ ] AGS	
[ ] RHIC	**[ ]** CA-D Specification No
[ ] 912 Experimental Area	
[ ] 919 Experimental Area	**[ ]** CA-D Experiment No.
[ ] RHIC Experimental Area	
	[ ] Other
[ ] Buildings Structures, and Shielding	
Other ERL	

ERL CAVITY MATERIAL

In general the cavity and helium vessel shall be designed and manufactured in accordance with ASME BPVC VIII Div.1. Niobium would fall under part UNF: *Requirements for pressure vessels constructed of nonferrous materials, however* Niobium is not listed as an ASME BPVC VIII material.

A design basis for an exception from this requirement is based on experience with this material used for superconducting cavities built and in use throughout facilities all over the world combined with careful design of containment systems should allow niobium to be an acceptable material choice.

Containment
The Niobium cavity forms the boundary between the accelerator beam tube vacuum space and the liquid helium bath side. On the beam vacuum side the cavity is contained by the beam tube, on the helium side the cavity is contained by the Titanium vessel, which in turn is contained by the insulating vacuum vessel.

Maximum Allowable Working Pressure MAWP
The MAWP will be set at 20 psia, which will give a peak stress of 3500 psi or ½ of Yield at room temperature with a factor of safety greater than 5 (Code is 3.5).

Material certification

The Niobium material used for the cavity has been chemically analyzed.

Material Strength Tests

Mechanical strength tests have been carried out to determine yield and tensile properties.

Table 1.1 Mechanical Properties Niobium (RRR Grade)

	Room Temperature	Cryogenic Temperature 4K
Modulus	1.49 E+07 psi	1.79E+07 psi
Poisson Ratio	0.38	0.38
Yield	7.0 ksi	83 ksi
Ultimate	20 ksi	

Pressure Test
The Cavity will be pressure tested at room temperature at 110% of MAWP.

Collider-Accelerator Department

BROOKHAVEN NATIONAL LABORATORY

Building 911-A
P.O. Box 5000
Upton, NY 11973-5000
Phone 631 344-5272
Fax 631 344-5676
rck@bnl.gov

managed by Brookhaven Science Associates
for the U.S. Department of Energy

Memo

Date: January 8, 2008

To: E. Lessard

From: R. C. Karol

Subject: ERL ODH Calculations

Purpose

To compute the appropriate ODH class for the ERL Cave in B912 and the ERL helium recovery building located just north of B912. Oxygen deficiency can be caused by a leak of cold helium or nitrogen fluid present in these buildings.

Summary and Conclusions

The goal of this calculation was to determine the Oxygen Deficiency Hazard (ODH) risk for the ERL Cave in B912 and the ERL helium recovery building located just north of B912 by computing the fatality rate for a major cryogenic fluid release. A spectrum of events may cause an oxygen deficiency. A major cryogenic system failure has been chosen to bound the consequences of all credible failures in the ERL Cave and the ERL helium recovery building as shown below. Spill rates are assumed to remain constant throughout the release. In addition, a catastrophic failure of a 500L cryogenic Dewar in the ERL Cave was examined.

Building	Free Volume	Bounding Cryogenic Leak Location	Spill Rate (SCFM) [Reference 1]	ODH Exhaust Fan Capacity (SCFM)
ERL Cave in B912	20,000 ft^3	Failure of 1-inch copper LN2 transfer line	3275	12,000
ERL Helium Recovery Building	9500 ft^3	Rupture of Kinney vacuum pump helium discharge line	1150	2000

It is concluded that the ERL Cave and the ERL helium recovery building be classified as ODH 0 areas.

Applicable Criteria

The method and criteria in the BNL ODH Subject Area [2] was used to determine the ODH class for each ERL building.

ODH Model Description

The Fermi Model is a prescribed method to determine the necessary level of hazard control for a building having the potential for oxygen deficiency. The fatality rate in the model is the product of two numbers. One quantity is the probability per hour of an event causing an oxygen deficiency. The other quantity is found by estimating the minimum oxygen concentration during the transient, assuming instantaneous mixing of the air and inert gas in the building volume, and is represented by a factor between 0 and 1 (see Figure 1). The computed fatality rate is then used to define the ODH class necessary to protect personnel.

The Oxygen Deficiency Hazard fatality rate is defined as:

$$\Phi = PF$$

where Φ = the ODH fatality rate per hour
P = the expected rate of the event per hour, i.e. initiator frequency
F = the fatality factor for the event (Figure 1)

The value of P, the initiator frequency, is determined by using actual equipment failure rate data taken from the BNL SBMS subject area.

Figure 1. Graph of the Fatality Factor (logarithmic scale) versus the Computed Oxygen Partial Pressure.

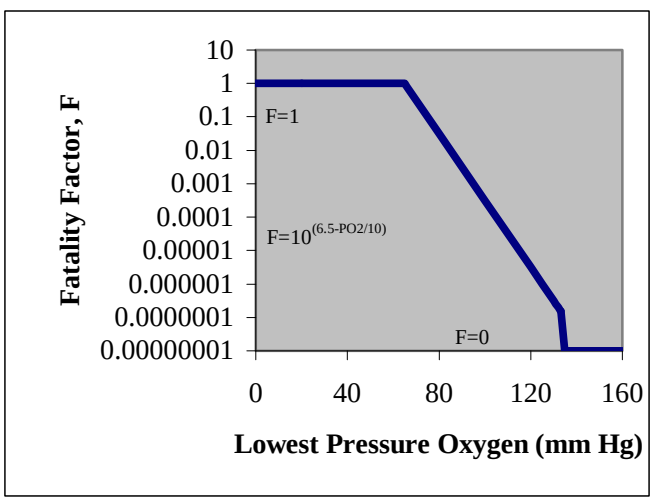

The value of the fatality factor, F, is the probability that a fatality will result if the inert gas release occurs. Figure 1 from the SBMS defines the relationship between the value of F and the computed oxygen partial pressure. The partial pressure is found by multiplying the mole fraction of oxygen in the building atmosphere by 760 mmHg. If the oxygen concentration is greater than 18% (~137 mmHg), then the value of F is defined to be zero. That is, all exposures above 18%

are defined to be safe and do not contribute to fatality. If the oxygen concentration is 18%, then the value of F is defined to be 10^{-7}. At decreasing concentrations the value of F increases until, at some point, the probability of fatality becomes unity. That point is defined to be 8.8% (~67 mmHg) oxygen in the Fermi model, the concentration at which one minute of consciousness is expected.

The value of Φ, the fatality rate, is then used to determine the ODH class of the building as follows:

ODH Class	Fatality Rate (per hour)
NA	$<10^{-9}$
0	$\geq 10^{-9}$ but $<10^{-7}$
1	$\geq 10^{-7}$ but $<10^{-5}$
2	$\geq 10^{-5}$ but $<10^{-3}$
3	$\geq 10^{-3}$ but $<10^{-1}$
4	$\geq 10^{-1}$

The oxygen concentration in the building during a release of a gas is approximated by solving the following differential equations:

(a) If the exhaust fan is on and the spill rate of inert gas (R) is less than the exhaust fan capacity (Q):

$$V\frac{dC}{dt} = 0.21\,(Q - R) - QC$$

Where

V = building volume (ft^3)
C = oxygen concentration (mole fraction)
t = time (minutes)
Q = exhaust fan(s) flow rate (CFM)
R = inert gas spill rate into building (CFM)

Solving results in the following equation:

$$C(t) = 0.21\,[1 - R/Q(1-\exp(-Qt/R)]$$

(b) If the exhaust fan is off or if the inert gas spill rate (R) is greater than the exhaust fan capacity (Q):

$$V\frac{dC}{dt} = -RC$$

Solving results in the following equation:

$$C(t) = 0.21\exp(-Rt/V)$$

Assumptions

1. Building volumes were measured with appropriate corrections made for determining the free volume.

2. The ERL Cave exhaust fan starts 30 seconds after the cave oxygen concentration sensors fall to 18% and has a capacity of 12,000 CFM. Since the exhaust flow rate exceeds the gas spill rate, as soon as the fan starts, the oxygen concentration in the cave rises.

3. The ERL helium recovery building currently has no exhaust fan but has oxygen sensors which alarm at 18% oxygen concentration. An alternative is examined with an exhaust fan capacity of 2000 CFM. The fan is assumed to start 30 seconds after the oxygen sensor trips at 18%. Since the exhaust flow rate exceeds the gas spill rate, as soon as the fan starts, the oxygen concentration in the helium recovery building rises.

4. The helium and nitrogen spill rates, assumed to remain constant, were obtained from Reference 1.

5. Outside air drawn into the ERL Cave has a 21% oxygen concentration.

6. As per the SBMS model, the oxygen concentration in the building is found by assuming instantaneous mixing of the air and cryogenic gas in the building volume.

Detailed Calculation and Analyses

1. ERL Cave ODH Calculation:

In order to simplify the calculation for the ERL Cave by avoiding a detailed analysis of the cryogenic system failure rates, the following was done:

1) Using the worst case cryogenic fluid spill rate [1], the time for the cave oxygen concentration to fall from 21% to 18% was determined using:

$$t = -\ln (0.18/0.21)\ V/R$$

where:
V = the ERL cave free volume, 20,000 ft^3
R = the maximum spill rate of nitrogen into the ERL cave, 3275 CFM

This results in a time of 0.94 minutes.

2) Assuming that it takes 30 seconds from the time of oxygen sensor trip until the ODH exhaust fan is at full capacity, the fan will be exhausting 1.44 minutes after spill initiation.

3) With t = 1.44 minutes, the oxygen concentration drops to a 16.6% just as the exhaust fan reaches full capacity of 12,000 CFM. The oxygen concentration then rises when fresh air is drawn into the cave as the exhaust fan operates.

4) Using this minimum oxygen concentration results in a partial pressure of 126 mmHg and a Fatality Factor, F, of 7.8×10^{-7}.

5) Next the initiator frequency, P, which results in a Fatality Rate, Φ of $<10^{-7}$ is found. A Fatality Rate of $<10^{-7}$ corresponds to an ODH 0 classification.

$$P = \Phi/F = 10^{-7}$$

Solving yields an allowable initiator frequency of P = 0.128 per hr to maintain an ODH 0 classification. This means that this major LN2 leak into the ERL cave, other pressure boundary failures with lower spill rates and human error resulting in a release of inert gas in the ERL cave could occur every 7.8 hours and still allow the cave to be classified as an ODH 0 area.

6) This initiator frequency is obviously unrealistically high compared to a credible frequency. Thus, controlling the ERL Cave as an ODH 0 area is acceptable and appropriate.

Finally, a catastrophic failure of a 500L He Dewar in the ERL Cave is examined to verify that ODH 0 is appropriate for this failure. The expansion ratio for helium from liquid helium at atmospheric pressure to room temperature helium gas at 70F is 754 [3]. Thus the released helium is 13,312 ft^3. Assuming perfect mixing of this release into the 20,000 ft^3 cave volume and ignoring any beneficial effects of the ODH exhaust fan, results in an oxygen concentration of 10.8%. The fatality factor at 10.8% oxygen is 1.96×10^{-2}. The probability of a Dewar rupture is 10^{-6} per hour [2], thus the Fatality Rate is 1.96×10^{-8} per hour. This is $<10^{-7}$ per hour so the designation of ODH 0 for the cave remains acceptable.

2. <u>ERL Helium Recovery Building ODH Calculation:</u>

The ERL helium recovery building ODH classification is first examined by finding the time for the oxygen concentration to fall to a level that would cause the room to exceed an ODH 0 classification without ant ODH exhaust fan. It is conservatively assumed that the initiating frequency for this event is once a year or 1.14×10^{-4} per hour. The assumed failure rate is very conservative since SBMS lists pipe-section rupture frequencies as ranging from 10^{-8} to 10^{-10} per hour. The once per year failure rate accounts for a burn-in period when ERL is first started up and prevents having to do a detailed failure rate study of the systems in the helium recover building.

1) Using the worst case cryogenic fluid spill rate [1], the time for the helium recovery building oxygen concentration to fall from 21% to 18% was determined using:

$$t = -\ln (0.18/0.21)\ V/R$$

Where:
V = the ERL helium recovery building volume, 9500 ft^3
R = the maximum spill rate of helium into the ERL recovery building, 1150 CFM

This results in a time of 1.3 minutes.

2) Conservatively assuming that the initiator frequency, $P = 1.14 \times 10^{-4}$ per hour means that F must equal 8.77×10^{-4} to have an ODH 1 classification.

3) If $F = 8.77 \times 10^{-4}$, then the corresponding oxygen concentration is found using:

$$F = 10^{(6.5-PO2/10)}$$
$$C = PO2/760\ (100)\ \%\ \text{oxygen}$$

Solving yields PO2 = 95.6 mmHg and C = 12.6% oxygen.

4) The time from the start of the accident to reach 12.6% oxygen is found to be 4.2 minutes.

5) Thus with the restraint to maintain the room posted as ODH 0, there is only 2.9 minutes to evacuate the building after the ODH alarm sounds. This may be insufficient time to evacuate. The building has 2 doors and a footprint of 41' x 24' with three large equipment skids in the room.

As an alternative, an ODH exhaust fan having a capacity of 2000 CFM is assumed. This alternative is necessary because the above scenario results in a low oxygen concentration and depends on a fairly rapid response time for the building occupants to escape.

1) From step 1 above it takes 1.3 minutes to trip the oxygen senor when the oxygen concentration falls to 18%.

2) Assuming that it takes 30 seconds from the time of oxygen sensor trip until the ODH exhaust fan is at full capacity, the fan will be exhausting 1.8 minutes after spill initiation.

3) With t = 1.8 minutes, the oxygen concentration drops to a 16.9% just as the exhaust fan reaches full capacity of 2,000 CFM. The oxygen concentration then rises when fresh air is drawn into the cave as the exhaust fan operates.

4) Using this minimum oxygen concentration results in a partial pressure of 128.4 mmHg and a Fatality Factor, F, of 4.57×10^{-7}.

5) Next the initiator frequency, P, which results in a Fatality Rate, Φ of $<10^{-7}$ is found. A fatality Rate of $<10^{-7}$ corresponds to an ODH 0 classification.

$$P = \Phi/F = 10^{-7}$$

6) Solving yields an allowable initiator frequency of P = 0.219 per hr to maintain an ODH 0 classification. This means that this major helium leak into the ERL helium recovery building, other pressure boundary failures with lower spill rates and human error resulting in a release of inert gas in the helium recovery building could occur every 4.6 hours and still allow the building to be classified as an ODH 0 area.

7) This initiator frequency is obviously unrealistically high compared to a credible frequency. Thus, controlling the ERL helium recovery building as an ODH 0 area is acceptable and appropriate.

This calculation was checked by Peter Cirnigliaro.

References

1. Email from Y. Than to R. Karol dated 1/8/08, ERL ODH Data
2. BNL Standards Based Management System Subject Area, ODH Classification/Controls
3. R.F. Barron, *Cryogenic Systems*, 2nd Edition, 1985, Oxford University Press, NY. Appendices B and D.

Lessard, Edward T

From: McIntyre, Gary T
Sent: Thursday, March 27, 2008 12:19 PM
To: Lessard, Edward T
Cc: Conrad, Cheryl S; Glenn, Joseph W; Karol, Raymond C; Brown, Kathleen M; Than, Yatming
Subject: Closing of Action Items from LESHC Meeting Minutes 06-06
Follow Up Flag: Follow up
Flag Status: Red
Attachments: 010604017-CAL-04 erl reliefs LIST for vessels, piping trapped volumes and pressure ratings.pdf; 010604026-CAL-01 ERL ballast tank frame and lifting lugs.pdf; 010604026-QAR-01 memo certificate ERL ballast tank support….pdf; A03G00001-QAR-01 memo ERL cavity material.pdf; 010604045 5cell Cooldown calcs.pdf

Dear Ed,
The attached files are being placed in the LESHC Documentation file of the ERL archive. These documents are in response to the following action items:

06-06 Action Items	Action Taken
1.2.1.1	LESHC document file opened in ERL Archive - completed 05/07
1.2.1.2	See attached “010604017-CAL-04 erl reliefs… list”
1.2.1.3	See attached “010604017-CAL-04 erl reliefs… list”
1.2.1.4	See attached “010604026-CAL-01 ERL ballast tank frame and lifting lugs.pdf”
1.2.1.5	See attached “010604026-CAL-01 ERL ballast tank frame and lifting lugs.pdf”
1.2.1.6	See attached “010604026-QAR-01 memo certification”
1.2.1.7	See attached “A03G00001-QAR-01 memo ERL cavity material.pdf”
1.2.1.8	See attached “010604045-CAL-01 5cell cooldown calcs.pdf”
1.2.1.9	Submitted to C. Conrad 02/08

This closes all of the original action items assigned in the 06-06 minutes but one. Item 1.2.1.10 requires the submission of “operating procedures … for Committee review”. These documents are in process and will be provided to the Committee upon completion, expected date 06/30/08. With the review and approval of these procedures in conjunction with the satisfaction of all other open action items the 5-cell cavity can be cryogenic testing.

Thank you,
Mac

Gary T. McIntyre
Group Leader, Collider Support
Collider-Accelerator Department
Brookhaven National Laboratory
Building 911A
Upton, New York 11973-5000
Office: 631-344-7037
e-mail: mac@bnl.gov

C-A D Engineering Design Support Documentation Cover Page

DOCUMENT NO: 010604017-CAL-04

Title: ***Reliefs valve list Cold Emission Test cryo system***	Author: D. Lederle
Subject: ERL Cryogenic System Cold Emission Test (CET)	
C-A Department Group: Cryogenic Systems	Checked: Roberto Than Approval: Roberto Than
Documentation Type: ☐ Written Technical Paper **[x]** Design Calculations ☐ Design Review Presentation ☐ Design Certification ☐ Specification ☐ Procurement Documentation ☐ Safety/ALARA Review Presentation ☐ Other:_____	Equipment Type: ☐ Magnets and Power Supplies ☐ Vacuum Systems ☐ RF Systems **[x]** Cryogenic Systems ☐ Experimental Equipment ☐ Beam Instrumentation ☐ Water Systems ☐ Buildings, Structures, and Shielding ☐ Other:
Equipment Location: ☐ Tandem Van DeGraff ☐ Linac ☐ Booster ☐ AGS ☐ RHIC x 912 Experimental Area ☐ 919 Experimental Area ☐ RHIC Experimental Areas ☐ SNS _____ _____ ☐ Buildings, Structures, and Shielding ☐ Other _____	Associated information for cataloging (if available fill in the number): ☐ C-A D Design Room Job No. _____ ☐ C-A D Design Room Drawing No. _ _____ ☐ C-A D Specification No. _____ ☐ C-A D Experiment No. _____ ☐ Other _____

		ERL Component Pressure Ratings							
	Relief Valve ID# Tag	Description	Components	Component Rating / MAWP / Design psig	MAWP or Design psig	Relief Spt psig	ASME Code		Volume
							Number	Mark	Liters
	BD02519H	5 cell cavity and Ballast Tank			9.3	8	BPVC-VIII-Div-1	UD	700
			Ballast tank	60	60				
			ecX cavity	**9.3**					
	H10970R		Ballast tank		9.3	5	Cooldown Process relief	N/A	
			ecX cavity						
	H10935R	Thermal Transition piping and comp.			60	60	B31.3	N/A	4.6
			FIC 2500	500					
			H10936M	3000					
			3/4"copper L pipe	**291**					
	H10931R	Thermal Transition piping and comp.			60	60	B31.3	N/A	4.6
			FIC 2501	500					
			H10932M	3000					
			3/4"copper L pipe	**291**					
	H10927R	power coupler piping and components			60	60	B31.3	N/A	4.6
			FIC 2500	500					
			H10928M	3000					
			3/4"copper L pipe	291					
			Fundamental Power Coupler	**150**					
	H10939R	flow controller manifold							
			3" sch10s pipe	872	60	60	B31.3	N/A	31.9
			H10930M 1/2"	3000					
			H10934M 1/2"	3000					
			H10938M 1/2"	3000					
			H10947M 3"	800					
			stainless flex line 1/2"	1160					
			3/4" L copper, cooldown line	**291**					
	H10965R	Vacuum pump suction line			50	14.7	B31.3	N/A	1595.0
			2" sch 10s pipe	1178					
			4" sch 10s pipe	675					
			6" sch 10s pipe	509					
			10" sch 10s pipe	385					
			H10944A, 10" suct. Valve	285					
			H10975A, 1" cooldown valve	1000					
			H10957A, 4" elect gun suct vlv	285					
			PT8455H	120					
			6" braided flex hose	210					
			10" braided flex hose	175					
			vaporizer	**50**					
			H10922A, 2" cryo valve	300					
			H10896A, 1" cryo valve	300					
	N6228R	Ballast tk,cavity, and RF gun heat shields			60	60	B31.3	N/A	48.7
			N6225M	300					
			N6226M	300					
			N6232M	300					
			N6230M	300					
			N2700M	300					
			1" copper L pipe	**247**					
	H10986R	Discharge side,Vacuum Pump skid		**25**	**14.7**	12	Vacuum	N/A	44.8
			3" Discharge Line						
	H10910R	Dewar side,Low pressure fill line from 500 L	1/2" x 2" VJ line	70	70	60	B31.3	N/A	0.1
	H10913R	Cryomodule side, Low pressure fill line from	1/2" x 2" VJ line	70	70	60	B31.3	N/A	0.9
	H10924R	3 atm fill line from 250 Liter dewar	1/2" x 2" VJ line	70	70	60	B31.3	N/A	0.1
	H10961R	3 atm fill line from 250 Liter dewar	1/2" x 2" VJ line	70	70	60	B31.3	N/A	0.3

Valve tag	Components	length (feet)	notes	type	O.D. (in)	Area/length in^2/ft	wall thickness (inches)	I.D. (inches)	in^3/ft	Area in^2	Area cm^2	volume in^3	Volume Liters	Volume Liters
BD02519H	5 cell cavity and Ballast Tank												750	750
H10970R														
H10935R	Thermal Transition heat station piping and components	47		3/4"copper L pipe	0.875	33.0	0.045	0.785	5.8	1550	10002.4	273	4.47	4.6
		7	internal	3/8" ss tube	0.375	14.1	0.035	0.305	0.9	99	638.5	6.14	0.10	
H10931R	Thermal Transition heat station piping and components	47		3/4"copper L pipe	0.875	33.0	0.045	0.785	5.8	1550	10002.4	273	4.47	4.6
		7	internal	3/8" ss tube	0.375	14.1	0.035	0.305	0.9	99	638.5	6.14	0.10	
H10927R	power coupler piping and components	47		3/4"copper L pipe	0.875	33.0	0.045	0.785	5.8	1550	10002.4	273	4.47	4.6
		7	internal	3/8" ss tube	0.375	14.1	0.035	0.305	0.9	99	638.5	6.14	0.10	
H10939R	flow controller manifold	7		3" sch 10s	3.5	131.9	0.12	3.26	100.2	924	5958.9	701	11.49	31.9
		47	cooldown line	3/4"copper L pipe	0.875	33.0	0.045	0.785	5.8	1550	10002.4	273	4.47	
										2474	15961.3	974	15.97	
H10965R	Vacuum pump suction line	1		2" sch 10s	2.375	89.5	0.109	2.157	43.9	90	577.6	44	0.72	1595.0
		2.7		4" sch 10s	4.5	169.6	0.12	4.26	171.0	458	2955.1	462	7.57	
		29.3		6" sch 10s	6.625	249.8	0.134	6.357	380.9	7318	47212	11159	183	
		83.7		10" sch 10s	10.75	405.3	0.165	10.42	1023.3	33921	218843	85651	1404	
N6228R	Ballast tk,cavity heat shields	300	plus internals	1" copper pipe	1.125	42.4	0.05	1.025	9.9	12723	82086.6	2971	48.69	48.7
H10986R	Discharge side,Vacuum Pump skid	25		3" sch 10s	3.5	131.9	0.12	3.26	100.2	3299	21281.7	2504	41.04	44.8
		20		1" sch 10s	1.315	49.6	0.109	1.097	11.3	991	6396.7	227	3.72	
H10910R	Dewar side,Low pressure fill line from 500 Liter dewar	4		1/2"T x 0.350"	0.5	18.8	0.035	0.43	1.7	75	486.4	6.97	0.11	0.1
H10913R	Cryomodule side, Low pressure fill line from 500 Liter dewar	30		1/2"T x 0.350"	0.5	18.8	0.035	0.43	1.7	565	3648.3	52.3	0.86	0.9
H10924R	3 atm fill line from 250 Liter dewar	4		1/2"T x 0.350"	0.5	18.8	0.035	0.43	1.7	75	486.4	6.97	0.11	0.1
H10961R	3 atm fill line from 250 Liter dewar	9		1/2"T x 0.350"	0.5	18.8	0.035	0.43	1.7	170	1094.5	15.7	0.26	0.3

RELIEF VALVE TAG: BD2519H

BURST TEST CERTIFICATE
& CERTIFICATE OF CONFORMANCE

ASME VIII DIV I

CUSTOMER:	BS&B TULSA	DATE:	04/02/2008
	7455 EAST 46TH STREET	P.O. NUMBER:	BNL-0000130433
	PO BOX 470590	BS & B LOT NO:	A8000495-1
	TULSA, OKLAHOMA,	SIZE:	4" DN 100
	OK -74147	TYPE:	LPS
	United States Of Ame	HOLDERTYPE:	S
QTY. OF UNITS SHIPPED:	3	MATERIAL:	316,316
QTY. OF UNITS TESTED:	2	HEAT NOs:	7460548

We certify that the Rupture Discs covered by this data have been manufactured, inspected, tested and packaged in accordance with the purchase order requirements.
Test results are on file available for examination.

BURST TEST RESULTS

NUMERICAL VALUE	PRESSURE UNIT	@TEMPERATURE
7.6, 7.6,	psi(G)	72° F

RATED RUPTURE

NUMERICAL VALUE	PRESSURE UNIT	@TEMPERATURE
8.0,	psi(G)	72° F

OTHER DETAILS:-

TAG NUMBERS:

MNFA: 12.740 IN^2

Kr(G) : 0.79

Per Pro BS & B Safety Systems Ltd.

Quality Assurance Department

BS&B SAFETY SYSTEMS; BAY G-1, RAHEEN BUSINESS PARK, LIMERICK, REPUBLIC OF IRELAND . Tel No: + 353-61-484700 FaxNo.:+353-61-227987

Stahlwerk Ergste Westig GmbH
Postfach 20 40
D-59412 UNNA

Zapp Precision Strip, Inc.
266 Barnet Blvd.
Dartmouth, MA 02745
Phone +1 508-998-6300
Fax +1 508-998-6310
Tollfree 888-647-3700
www.zapp.com

Member of the Zapp Group

November 02, 2006

Inspection Certificate No. 2210001526000010 01

Your purchase Order	1510000200 dated 28.09.2006		
Sales Order	2202000374	Delivery Note	2210001526
Production Lot	1824959	Inspection Lot	020000136154
Item	10	STAINLESS STEEL	
Grade / Alloy	SS316L		
Dimensions	0.0050 " X 36.0000 "		
Thickness tolerance	-0.00025 " / 0.00025 "		
Width tolerance	0.00000 " / 0.37500 "		
Conditions	Annealed		
Surface	Bright Anneal		
Specifications	AMS 5507F / AMS 5524K / ASTM A 240 / A 240-06		
Ident-No	8700158		
Quantity / Weight	2.550,000		

Chemical composition Heat 7460548

C (%)	Si (%)	Mn (%)	S (%)	P (%)	Cr (%)
0,020	0,510	1,41	0,0010	0,0220	16,50
Ni (%)	**Mo (%)**	**Cu (%)**	**N (%)**		
10,25	2,16	0,210	0,025		

Quality inspection results

Tensile Strength 97.8 KSi
.2% Yield Strength 44.6 KSi
Elong. 2" 60.40%
Bend Passed
Corrosion Passed
Grain 9.0
Hardness Rb 82

In compliance with the conditions mentioned in the acknowledgement of order:
Sizes and surface: without objection
Quality identification test: without objection
This certificate has been issued by computer and is valid without signature.

ZPS / GENE SHELDON +1 508-998-6300

Batch D001245004

BS&B SAFETY SYSTEMS, L.L.C.

CERTIFICATE OF CONFORMANCE

SAFETY HEAD

02/06/2008

Customer:	BROOKHAVEN NATIONAL LABORATORY
P.O.Number:	BNL-0000130433
BS&B Lot:	A8000495-2

We certify that the items described in this document have been manfactured, inspected and tested in accordance with the standards applicable to our industry. The original test data is on file and available for your examination.

Type:	SRB-7RS
Size:	4 Inch
Quantity:	1
Assembly Number:	GW-0-0068-042
Flange Rating:	150/300 ANSI
Material I / L:	316
Material O / L:	316

Attachments: N/A

Tab Marking: N/A

BS&B Safety Systems , LLC

QA/QC DEPARTMENT

BS&B Safety Systems, L.L.C. • 7455 E. 46TH Street • P.O. Box 470590 • Tulsa, OK 74147-0590
Phone 918/622-5950 • Fax 918/665-3904
Email sales@ bsbsystems.com • Website www.bsbsystems.com

C-A D Engineering Design Support Documentation Cover Page

Document number: 010604026 CAL-01	
Title: ERL Ballast Tank Frame and Lifting lugs	**Author**: C.J. Liaw
Subject:	
C-A Department Group: Cryogenic Systems Group	**Approval**: Y. R.. Than
Documentation Type **[ ] Written Technical Paper** **[x] Design Calculations** **[ ] Design Review Presentation** **[ ] Design Certification** **[ ] Specification** **[ ] Procurement Documentation** **[ ] Safety/ALARA Review Presentation** Other	**Equipment Type** **[ ] Magnets and Power Supplies** **[ ] Vacuum Systems** **[ ] RF Systems** **[x] Cryogenic Systems** **[ ] Experimental Equipment** **[ ] Beam Instrumentation** **[ ] Water Systems** **[ ] Buildings, Structures, and Shielding** Other
Equipment Location:	**Associated information for cataloging**
[ ] Tandem Van DeGraff	**[ ]** CA-D Design Room Job No.
[ ] Linac	
[ ] Booster	**[ ]** CA-D Design Room Drawing No 010604026 and 0010604001
[ ] AGS	
[ ] RHIC	**[ ]** CA-D Specification No
[x] 912 Experimental Area	
[ ] 919 Experimental Area	**[ ]** CA-D Experiment No.
[ ] RHIC Experimental Area	
	[ ] Other
[ ] Buildings Structures, and Shielding	
Other	

ERL Ballast Tank Support Stand and Lifting Lug Stress Analysis

(1) The Ballast tank support stand:

Weight of the tank: 1415 lbf
Young's modulus: 30 x 10^6 psi
Yielding stress of steel: 30000 psi (at room temperature)
Density of steel: 0.3 lb/in^3
Fillet weld at joints: .25" x .25"
Sectional properties of the square tubing and the I-beam are shown in Table 1.

The ballast tank will be installed on the support stand as shown in Fig. 1. The support stand was first modeled with Beam elements (using ANSYS) to determine the maximum stress (and the location) and the maximum deformation in the structure due to the structure and the tank weight. A more detailed model, with 3D solid elements, was then used to model the local geometry at the location where the maximum stress occurred to determine the stress in the weldment as well as in the structure member. .

With the structure modeled with the beam elements, the analysis results show that the maximum stress in the structure is 1527 psi (see Fig. 2) and the maximum deformation in the structure is ~.006" (see Fig 3). From the detailed model, the analysis results show that the maximum stress in the weldment at the location, where the maximum stress occurs, is 1718 psi (with a safety factor of 17.5 to yield). This stress is reasonable compared with that by the engineering calculation shown in Appendix 1. The maximum stress estimated by hand calculation is 1794 psi (1718 psi by ANSYS).

The maximum reaction forces in each of the ½" bolts on the foot pad are Fx = 5.2 lbf, Fy = 145.1 lbf, and Fz = 14.5 lbf. The combined stress inside the bolt is 1028 psi (with a safety factor of 29 to the yielding stress).

The critical load to cause structure instability in the 75" long column is around 108400 lbf (the total weight of the tank is only 1415 lbf). Therefore buckling is not an issue for this case.

In conclusion, the support structure is safe to take the weight of the ballast tank.

(2) The lifting lugs:

Weight of the tank: 1415 lbf
Young's modulus: 30 x 10^6 psi (A36) and 28 x 10^6 psi (SST)
Yielding stress of A36 steel (Lug material): 36000 psi
Yielding stress of 304 SST (Tank material): 35000 psi
Density of steel: 0.3 lb/in^3
Fillet weld between the lug and the tank: .25" x .25"

The ballast tank is currently lying on the ground facing on its side. To install the tank onto the stand, one needs to lift the tank off the ground and to carry the tank onto the support stand. There are four lugs pre-welded on the outer shell of the tank (see Fig. 6). The following analysis is to evaluate the stress in the lug and in the weldment when lifting the tank.

Assuming that all the lugs were used to lift the tank (see Fig. 7) and the center of gravity(CG) was located close to the middle of the tank, one eighth of the ballast tank with one lug on it was modeled in ANSYS for the analysis (see Fig. 8). The lifting force on the lug was F = 1415 / (4*cos(35°)) = 432 lbs. The force direction with respect to the lug is shown in Fig. 7. Symmetric boundary conditions were applied to the cutting edges of the model. By limiting the maximum contact stress between the shank and the lug eye hole to 12 kips (a safety factor of 3 to yield), the shank diameter should be 1.496" OD (for the 1.5" eye hole) and the contact length will be .845" along the eye hole of the lug (per Roark and Young's formula). This information was also applied to the ANSYS model for the analysis.

Fig. 9 shows that the maximum stress on the lug is 15875 psi (SF of 2.27 to yield). Fig. 10 shows the stress distribution around the maximum stress area. Fig. 11 shows that the maximum stress on the weldment is 7740 psi (SF of 4.65 to yield). The maximum stress on the lug was also estimated by engineering calculation in Appendix 2. The maximum stress estimated by hand calculation is 15350 psi (15875 psi by ANSYS).

In conclusion, it is safe to lift the weight of the ballast tank by using the four lugs on the tank together.

Table 1: Sectional properties of Support components

Item	A (in^2)	Ix (in^4)	Iy (in^4)
4 x 4 x .25 Square Tubing	3.75	8.83	8.83
W4 x 13 I-Beam	3.83	11.3	3.86

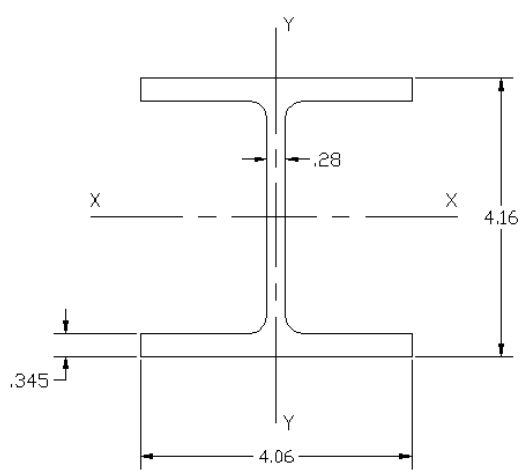

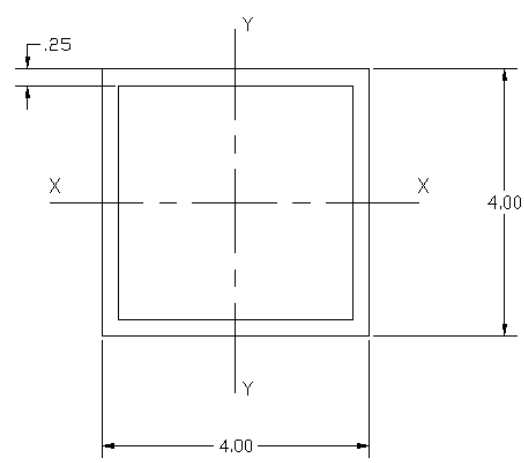

Fig. 1: The Ballast Tank Support Structure

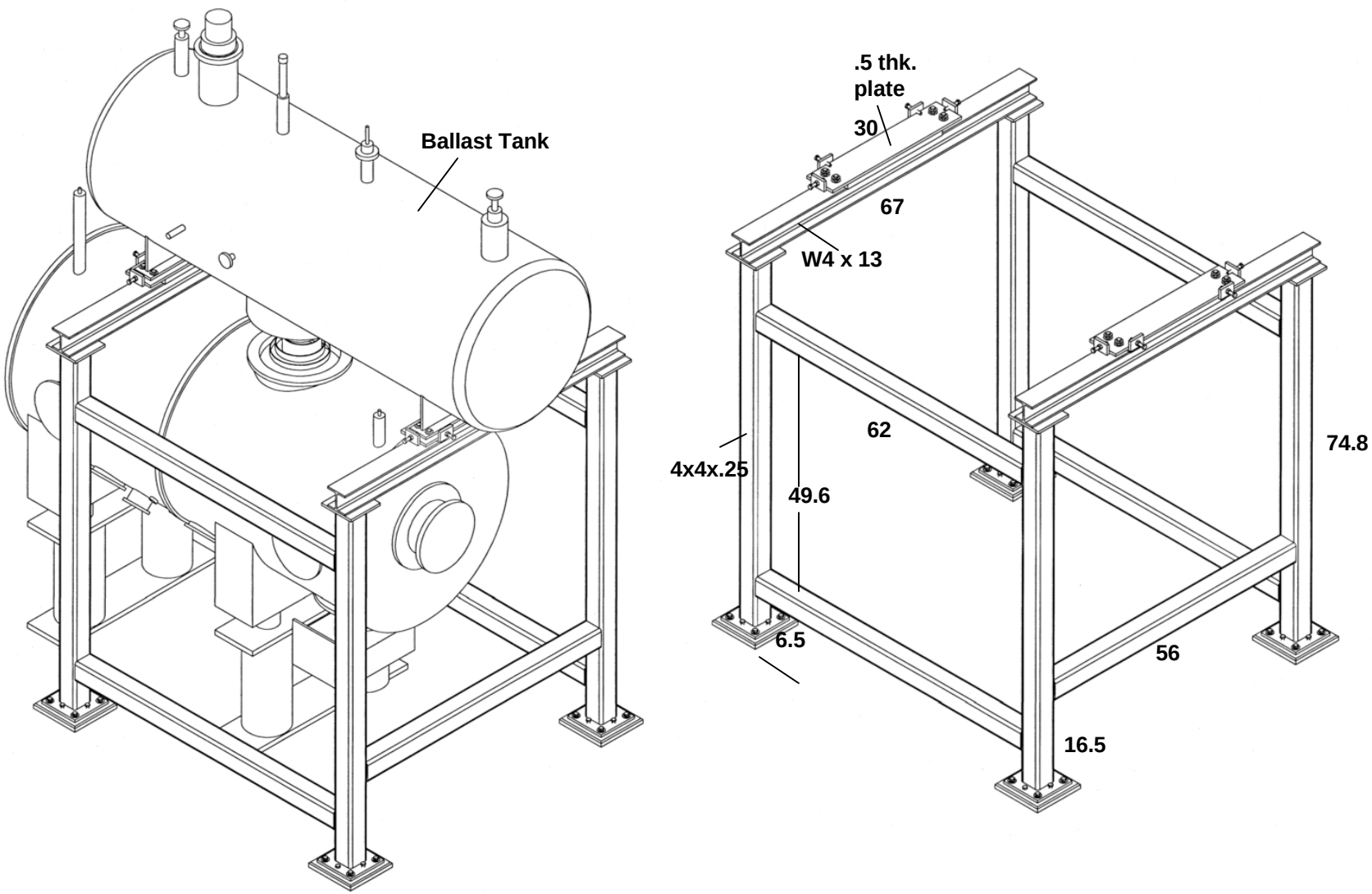

Fig. 2: Maximum stress in the support structure

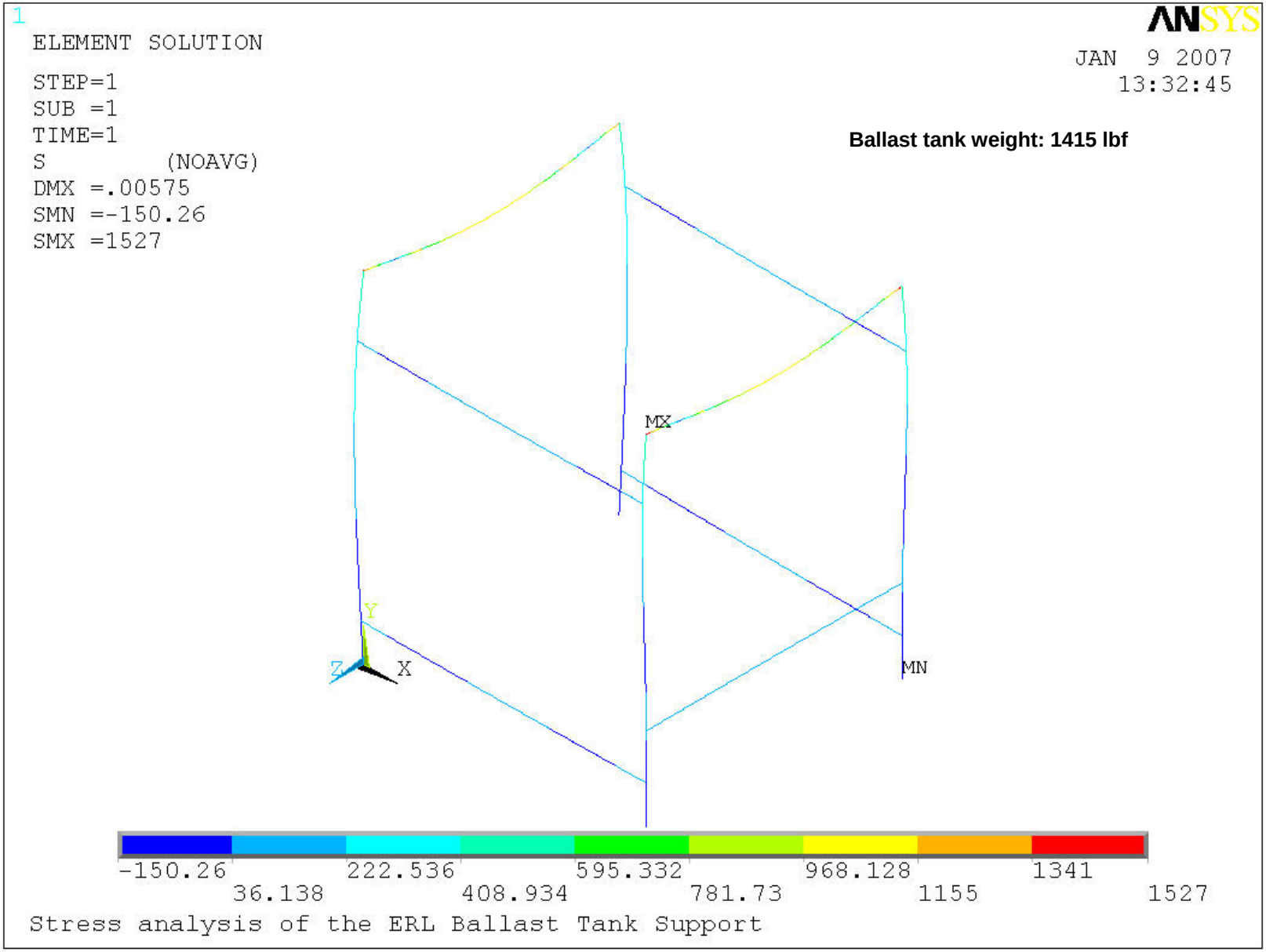

Fig. 3: Deformation of the support structure

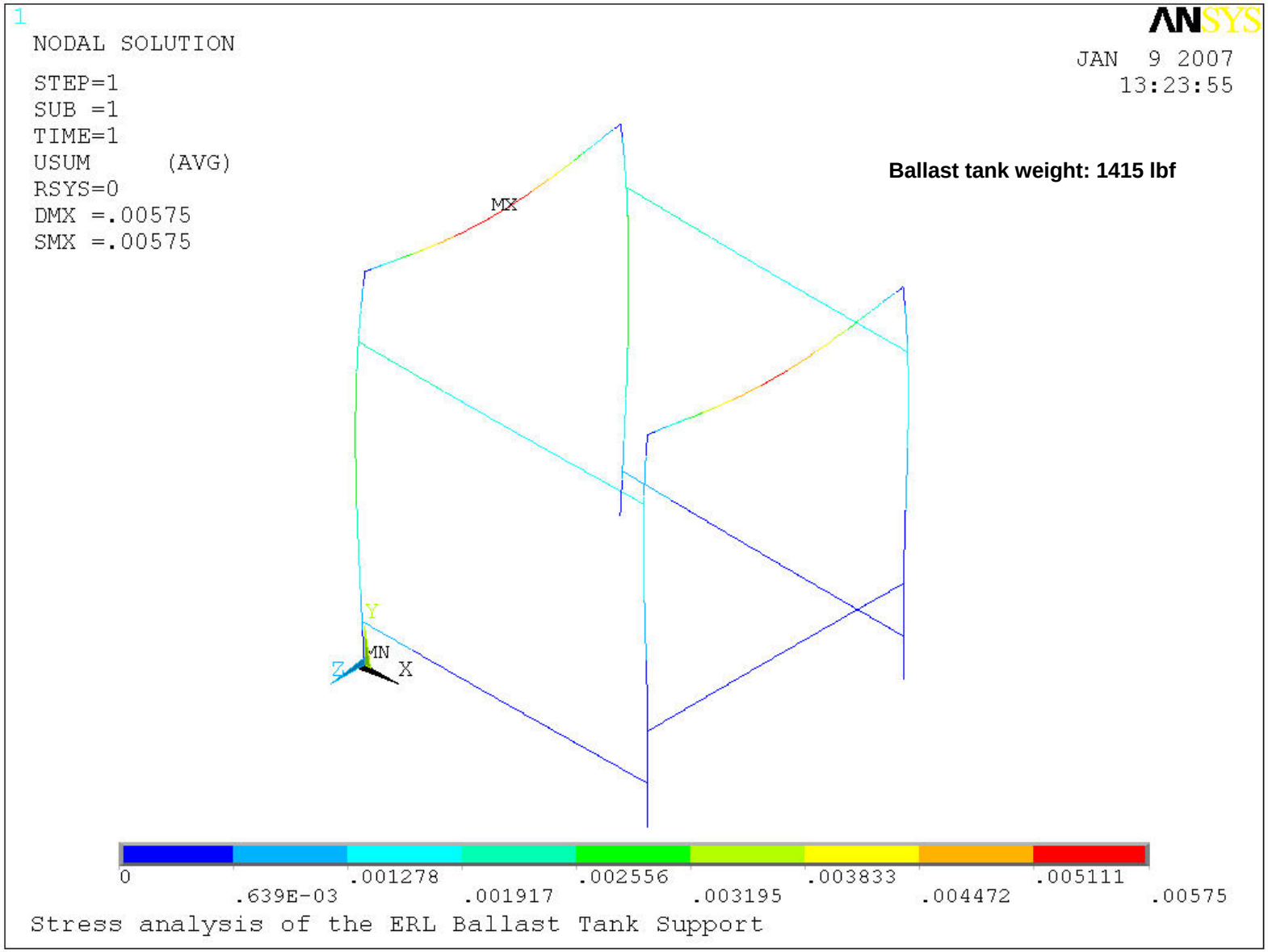

Fig. 4: Stress at the corner where maximum stress occurs (Top view)

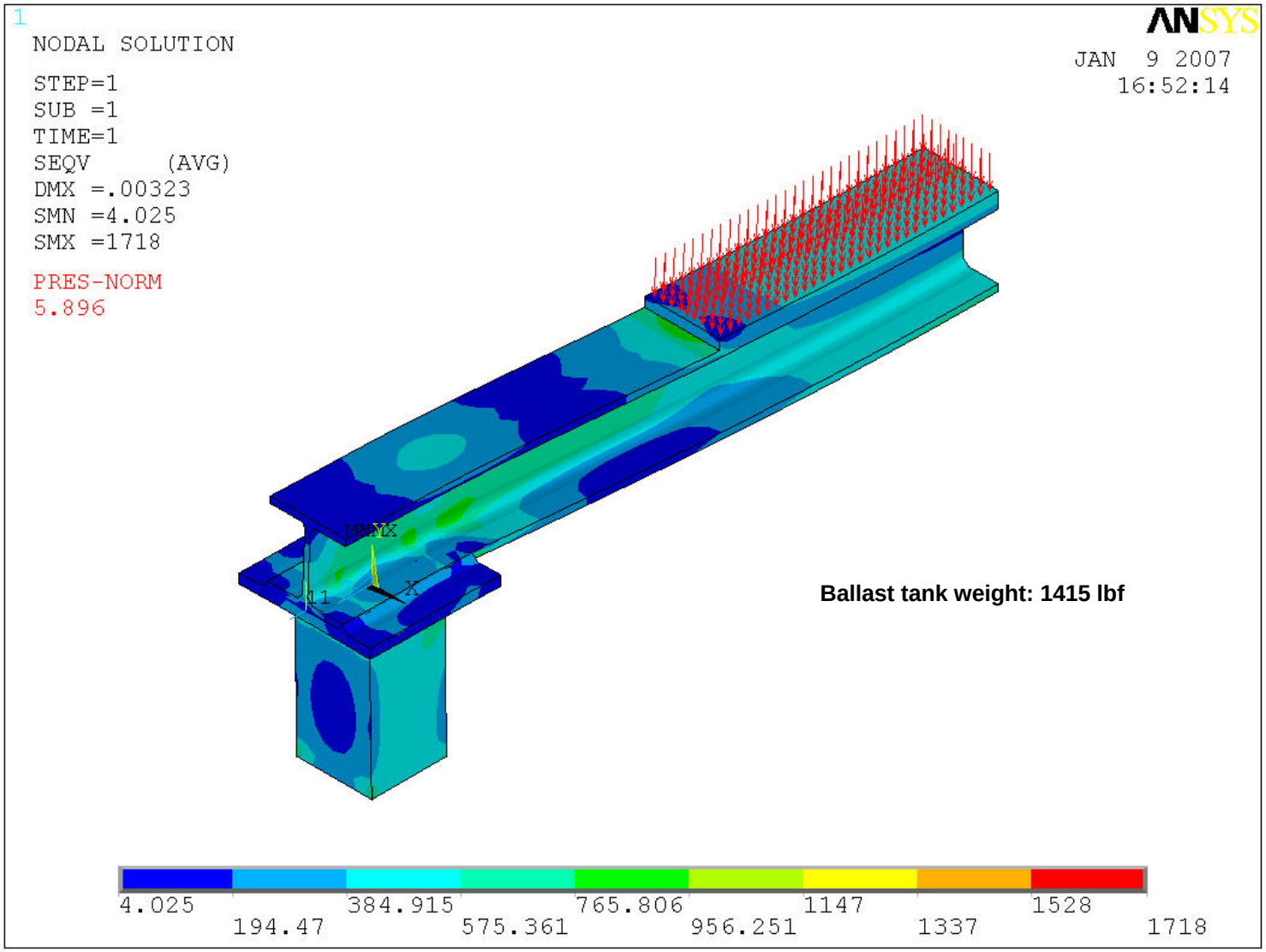

Fig. 5: Stress at the corner where maximum stress occurs (Bottom view)

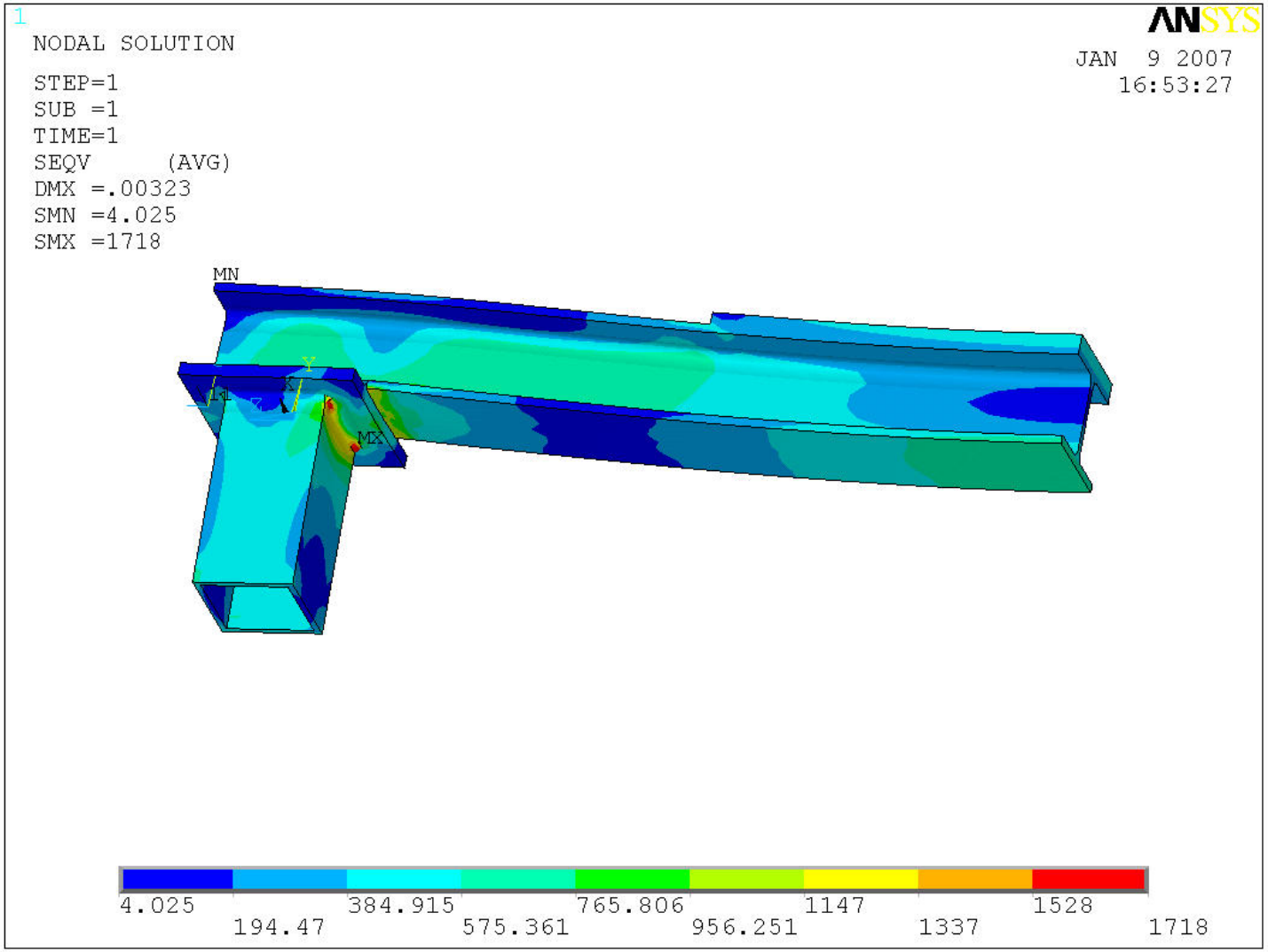

Fig. 6: Dimensions of the ballast tank and the lifting lug

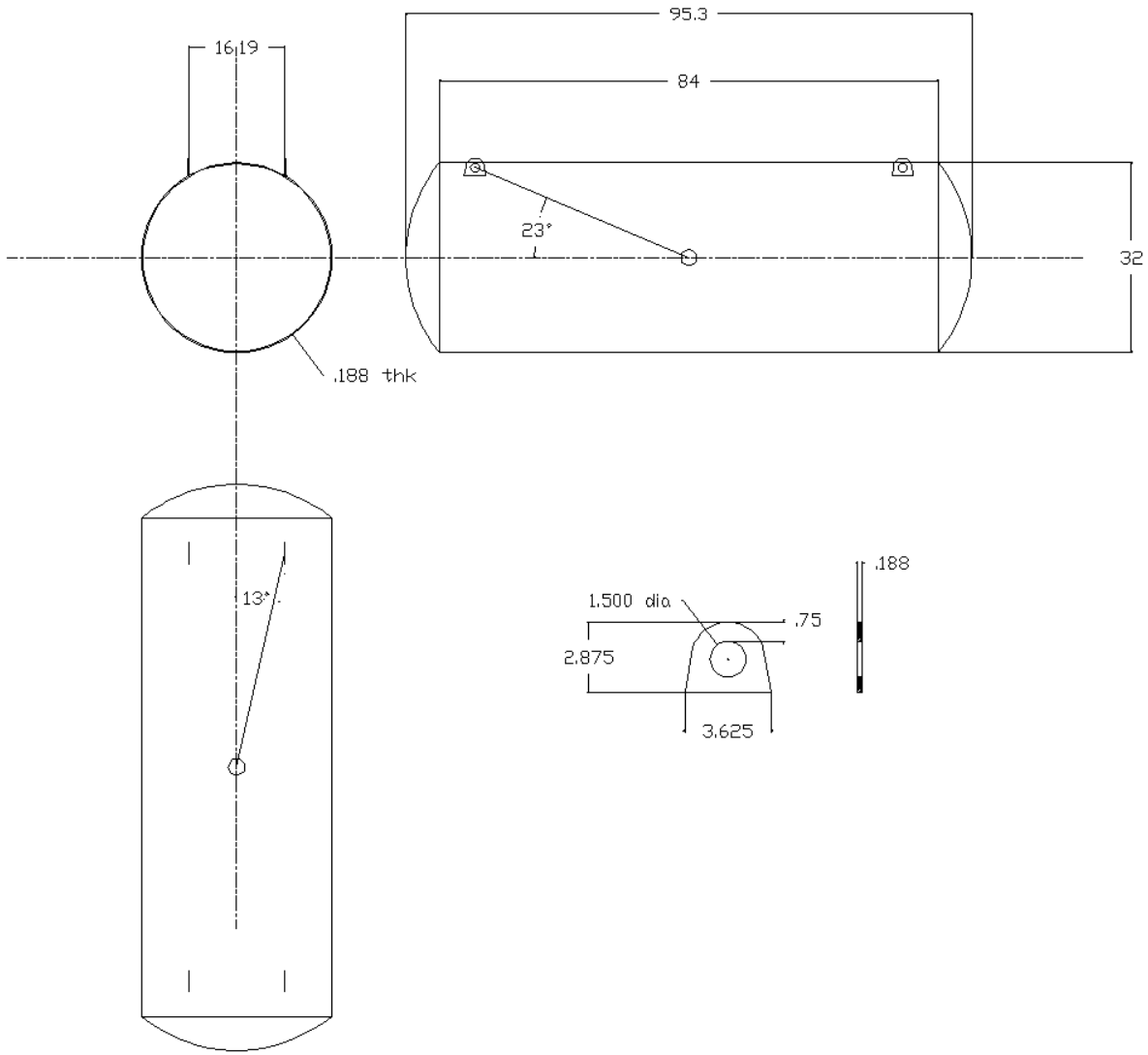

Fig. 7: Lifting the tank using 4 Lugs

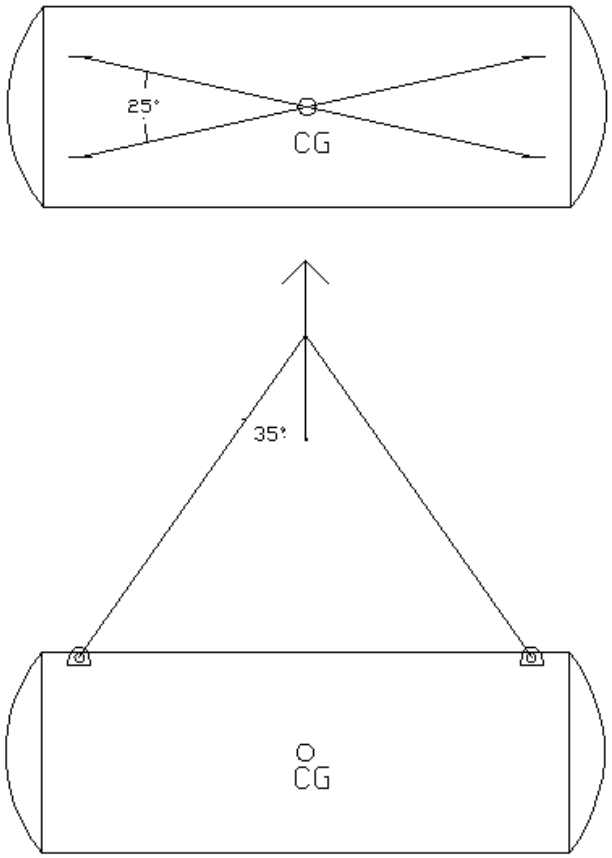

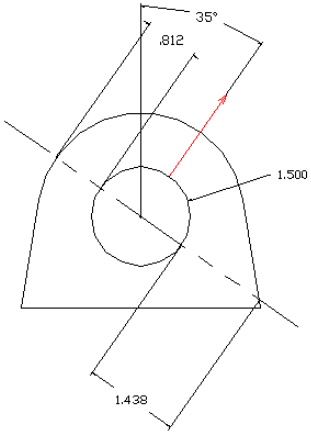

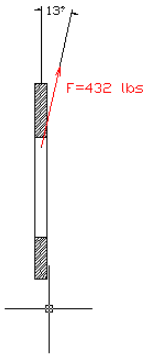

Fig. 8: ANSYS Model of a Lifting Lug On the Ballast Tank

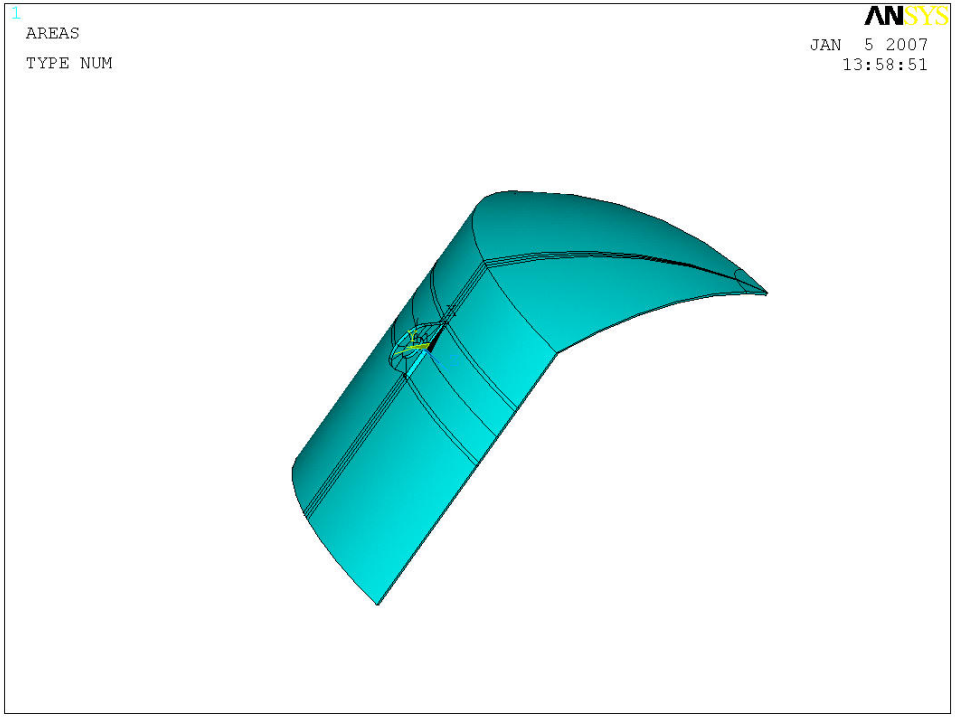

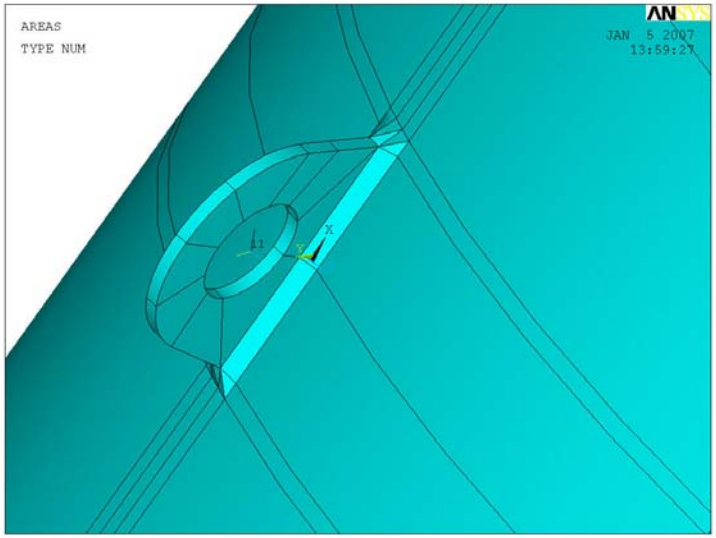

Fig. 9: Stress on the Lug and the Tank (Lifting using four Lugs)

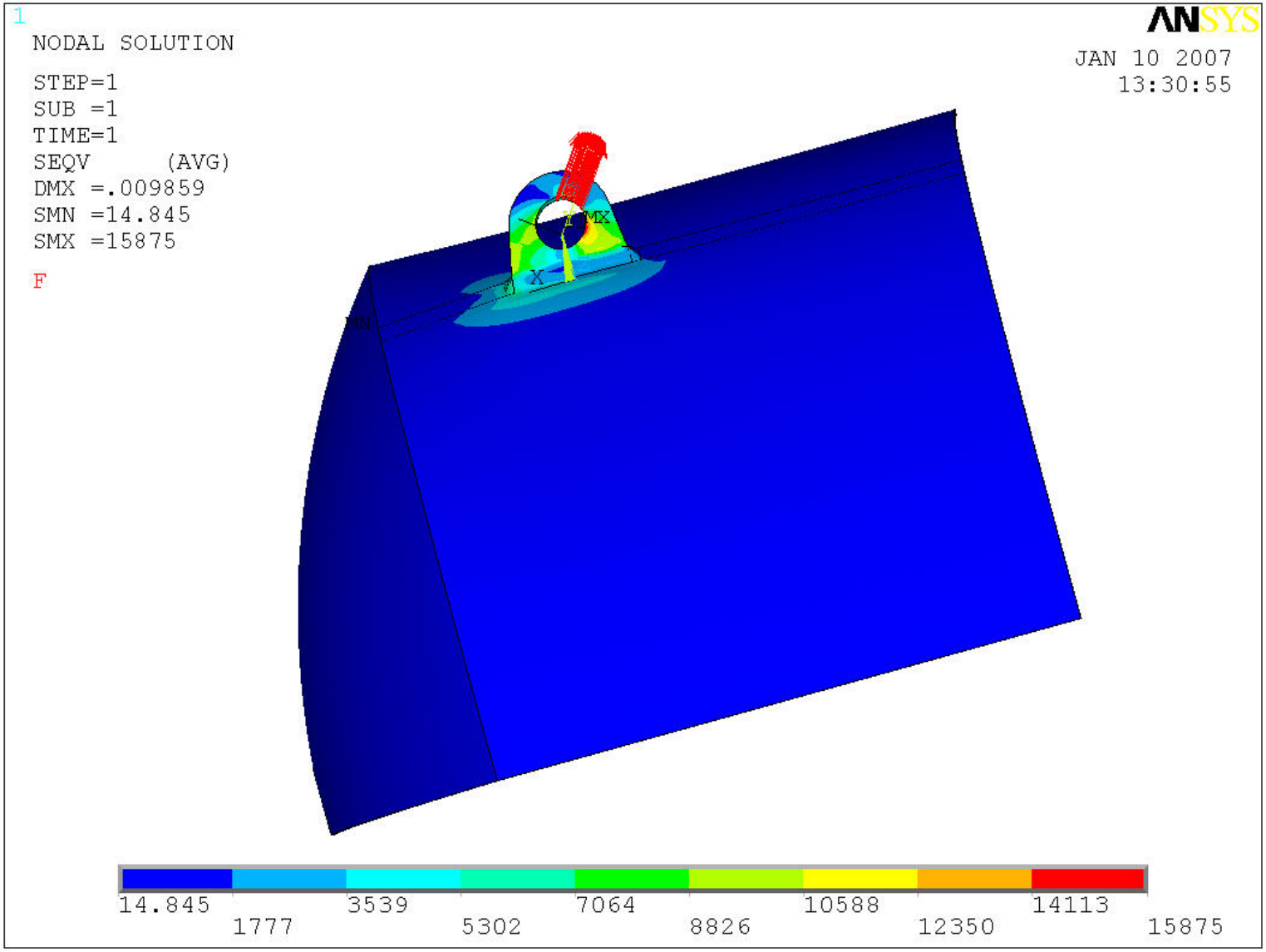

Fig. 10: Stress around the maximum stress area

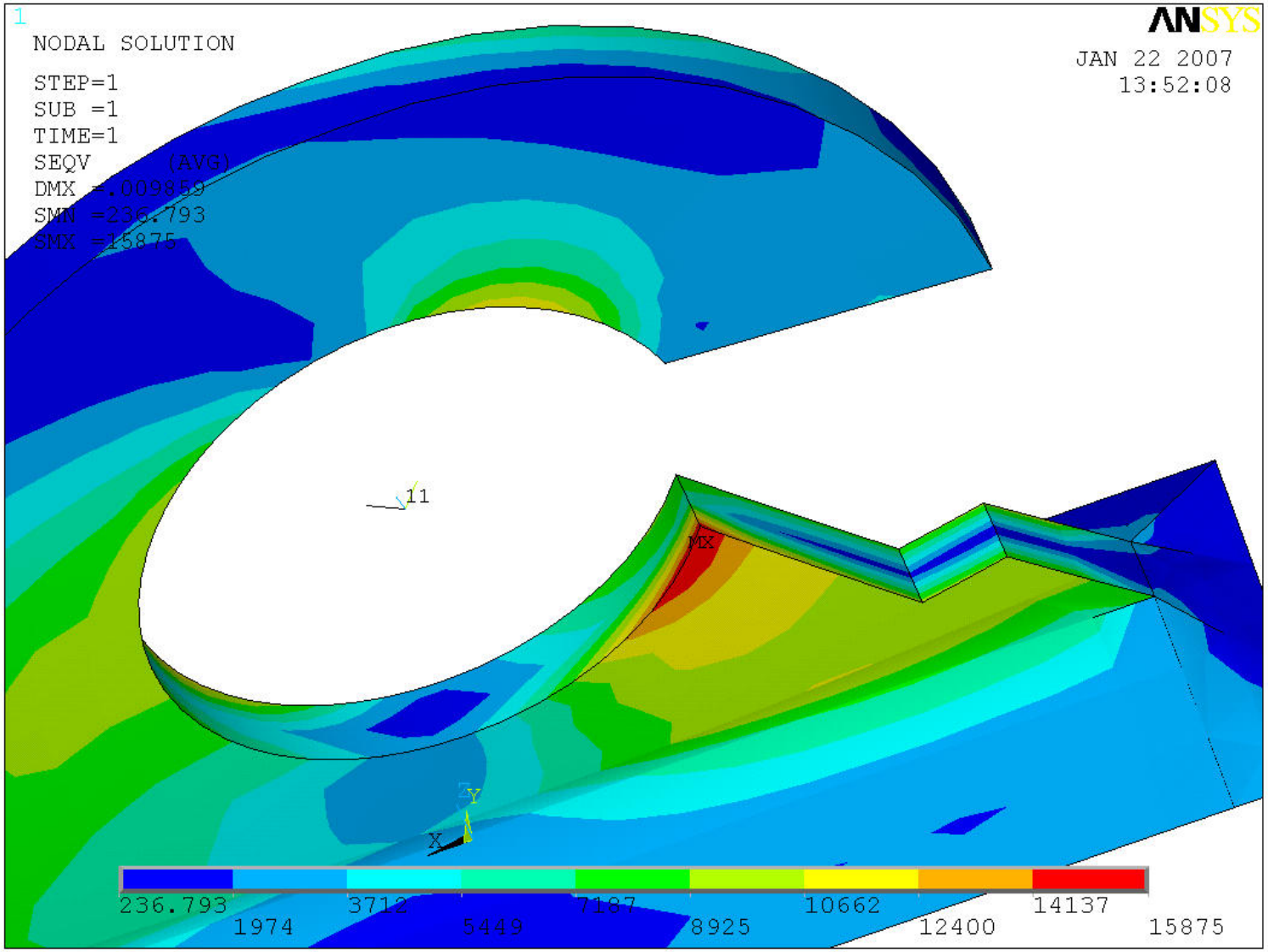

Fig. 11: Stress on the weldment (Lifting using four Lugs)

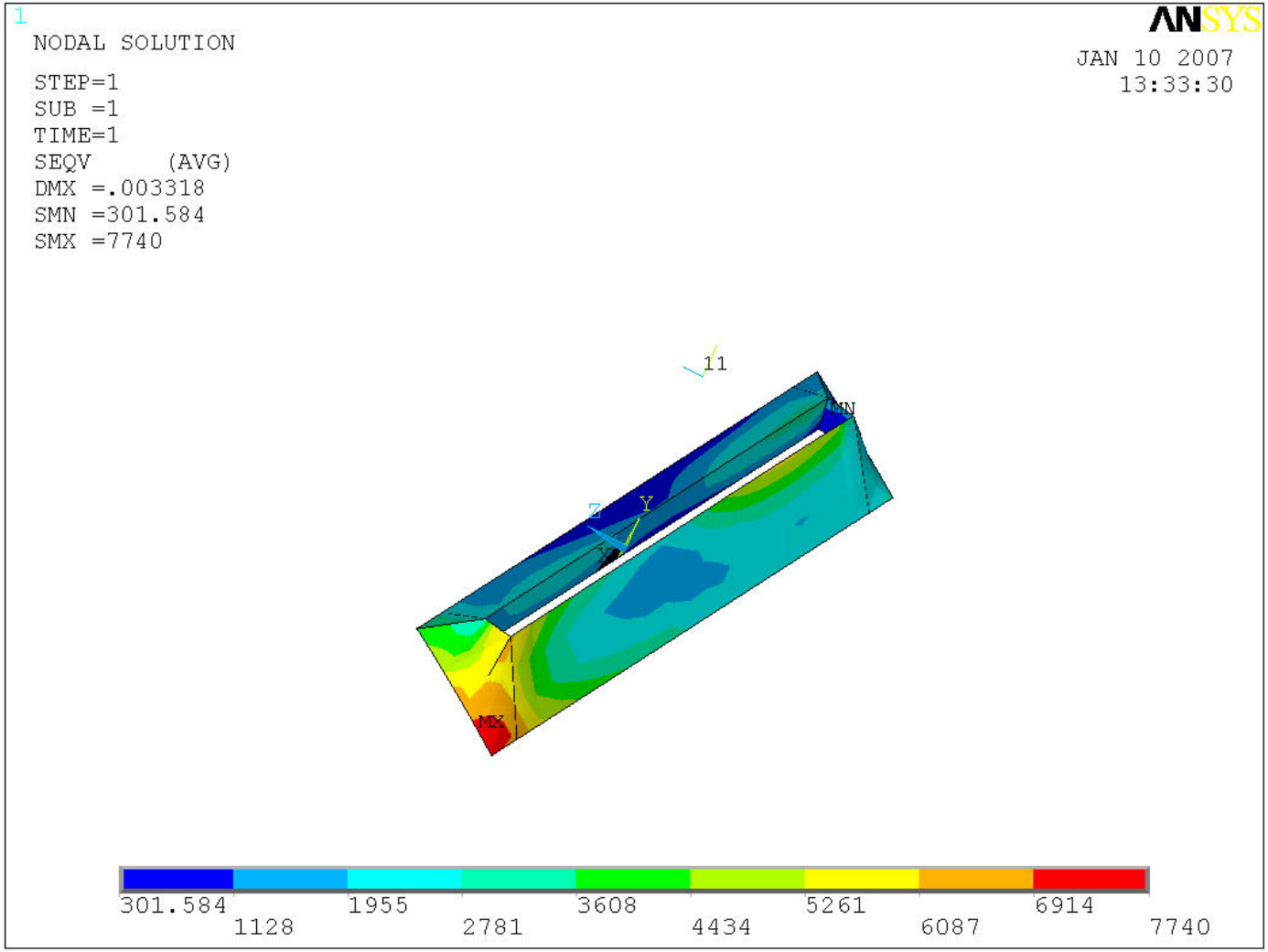

Appendix 1: Stress Analysis of a Beam with Uniform Loading at the Middle Portion

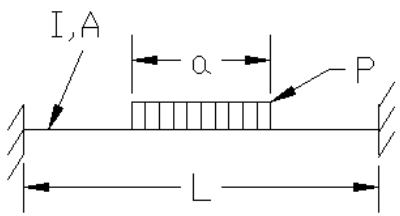

$E := 30 \cdot 10^6$ psi

$I := 11.3$ in^4

$a := 25$ in

$Length := 56$ in $\quad Load := \frac{1415}{2}$ lbs

$p := \frac{Load}{a} \quad p = 28.3 \quad \frac{lbs}{in}$

$y := \frac{4.16}{2}$ in $\quad A := 4 \cdot 25 \cdot 4 \quad y = 2.08$

Case1: Uniform load along the whole length:

$$Ma1 := -p \cdot \frac{Length^2}{12} \qquad Ma1 = -7.396 \cdot 10^3 \quad lbs - in$$

$$Ra1 := p \cdot \frac{Length}{2} \qquad Ra1 = 792.4 \quad lbs$$

Case 2:Uniform load , (L-a)/2 long; right hand side

$$LL1 := \frac{Length + a}{2}$$

$$Ma2 := -p \cdot (Length - LL1)^3 \cdot \frac{(Length + 3 \cdot LL1)}{12 \cdot Length^2} \quad lbs - in$$

$$Ra2 := p \cdot (Length - LL1)^3 \cdot \frac{(Length + LL1)}{2 \cdot Length^3} \quad lbs$$

Case3: Uniform load, (L-a)/2 long, left hand side

$$LL := \frac{Length - a}{2} \qquad LL = 15.5$$

$$Ma3 := -p \cdot LL^2 \cdot \frac{\left(6 \cdot Length^2 - 8 \cdot LL \cdot Length + 3 \cdot LL^2\right)}{12 \cdot Length^2} \quad lbs - in$$

$$Ra3 := p \cdot LL \cdot \frac{\left(2 \cdot Length^3 - 2 \cdot LL^2 \cdot Length + LL^3\right)}{2 \cdot Length^3} \quad lbs$$

Case 1-Case 2-Case3:

$Ma := Ma1 - Ma2 - Ma3$ $\quad Ma = -4.623 \cdot 10^{3}$ $\quad lbs - in$

$Ra := Ra1 - Ra2 - Ra3$ $\quad Ra = 353.75$ $\quad lbs$

Max

$Sig1 := \frac{Ma}{(y + .5) \cdot (.25 \cdot 4)}$ $\quad Sig1 = -1.792 \cdot 10^{3}$ $\quad psi$

$Sig2 := \frac{Ra}{A}$ $\quad Sig2 = 88.437$ $\quad psi$

$Sig := \left(Sig1^{2} + Sig2^{2}\right)^{.5}$ $\quad Sig = 1.794 \cdot 10^{3}$ $\quad psi$

Appendix 2: Estimation of Maximum Stress on the Lug (at Pt. A)

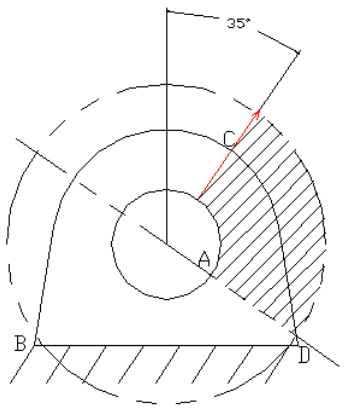

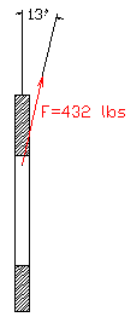

Fig. A1

Considering the shaded portion in Fig. A1 and assuming line AD being fixed, the model can be simpified to Fig. A2.

$F := 432$ lbs

$BC := 4.816$ in (Length of BC)

$CD := 2.881$ in (Length of CD)

The estimated laod on the shaded portion in Fig. A1:

$$P := 432 \cdot \frac{4.816}{(4.816 + 2.881)} \qquad P = 270.302 \quad \text{lbs}$$

$r1 := .75$ in

$r2 := .75 + 1.438 \qquad r2 = 2.188$ in

$h := 1.438$ in

$$r := \frac{(r1 + r2)}{2} \qquad r = 1.469 \quad \text{in}$$

$t := .188$ in

$$h1 := \frac{h}{2} \qquad h1 = 0.719 \quad \text{in}$$

$$A := h \cdot t \qquad A = 0.27 \quad \text{in}^2$$

$$m := \frac{r}{h} \cdot \ln\left(\frac{r2}{r1}\right) - 1 \qquad m = 0.094$$

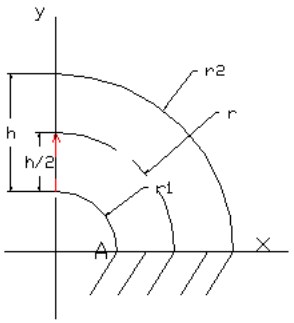

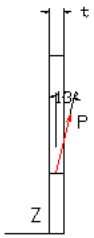

Fig. A2

E:The distance between the neutral bedning axis and the cenetr line of the cross section

$E := m \cdot \frac{r}{(m+1)}$ $\quad E = 0.126$ $\quad$ (Per Timoshenko, "Strength of Materials)")

1. Maximum stress at Pt. A due to in-plane bending:

$Sig1 := P \cdot r \cdot \cos\left(13 \cdot \frac{3.1416}{180}\right) \cdot \frac{(h1 - E)}{A \cdot E \cdot r1}$ $\quad Sig1 = 8.988 \cdot 10^3$ $\quad$ psi

(Per Timoshenko, "Strength of Materials)")

2. Maximum stress at Pt. A due to out of plane bending:

$$Sig2 := P \cdot \frac{r1 \cdot \sin\left(13 \cdot \frac{3.1416}{180}\right) \cdot \left(\frac{t}{2}\right)}{h \cdot \frac{t^3}{12}}$$

$Sig2 = 5.384 \cdot 10^3$ $\quad$ psi

---

3 Normal stress at Pt.A:

$$Sig3 := \frac{P \cdot \cos\left(13 \cdot \frac{3.1416}{180}\right)}{A}$$

$Sig3 = 974.217$ $\quad$ psi

4. Shearing stress at Pt. A:

$$Sig4 := \frac{P \cdot \sin\left(13 \cdot \frac{3.1416}{180}\right)}{A}$$

$Sig4 = 224.916$ $\quad$ psi

The overall maximum stress at Pt A:

$Sig := \left[(Sig1 + Sig2 + Sig3)^2 + Sig4^2\right]^{.5}$ $\quad Sig = 1.535 \cdot 10^4$ $\quad$ psi

C-A D Engineering Design Support Documentation Cover Page

Document number: 010604026 QAR-01	
Title: Certification Memo ERL Ballast Tank Support Frame and lifting lugs	**Author**: Y. R. Than
Subject:	
C-A Department Group: Cryogenic Systems Group	**Approval**: D. Lederle
Documentation Type **[ ] Written Technical Paper** **[ ] Design Calculations** **[ ] Design Review Presentation** **[x] Design Certification** **[ ] Specification** **[ ] Procurement Documentation** **[ ] Safety/ALARA Review Presentation** Other	**Equipment Type** **[ ] Magnets and Power Supplies** **[ ] Vacuum Systems** **[ ] RF Systems** **[x] Cryogenic Systems** **[ ] Experimental Equipment** **[ ] Beam Instrumentation** **[ ] Water Systems** **[ ] Buildings, Structures, and Shielding** Other
Equipment Location:	**Associated information for cataloging**
[ ] Tandem Van DeGraff	**[ ]** CA-D Design Room Job No.
[ ] Linac	
[ ] Booster	**[ ]** CA-D Design Room Drawing No 010604026
[ ] AGS	
[ ] RHIC	**[ ]** CA-D Specification No
[ ] 912 Experimental Area	
[ ] 919 Experimental Area	**[ ]** CA-D Experiment No.
[ ] RHIC Experimental Area	
	[ ] Other
[ ] Buildings Structures, and Shielding	
Other ERL	

MEMO

SUPPORT FRAME
This certifies that the ERL Ballast tank support frame has been analyzed for strength and is safe to take the weight of the tank.

LIFTING LUGS
This certifies that the ERL Ballast tank's lifting lugs have been analyzed for strength and that the factor of safety is less than 3, and therefore will not be used for lifting of the tank.
The tank will be lifted using lifting straps with a spreader beam.

C-A D Engineering Design Support Documentation Cover Page

DOCUMENT NO: 010604045-CAL-01

Title: ***ERL 5-cell Cavity # of Cooldowns Calculation***	Author: Gary McIntyre
Subject: Calculations to determine the number of cooldown cycles the ERL 5-cycle cavity can sustain without failure.	
C-A Department Group: Mechanical	Checked: C. Pai Approval: G. McIntyre See attached
Documentation Type: ☐ Written Technical Paper [x] Design Calculations ☐ Design Review Presentation ☐ Design Certification ☐ Specification ☐ Procurement Documentation ☐ Safety/ALARA Review Presentation ☐ Other:_____	Equipment Type: ☐ Magnets and Power Supplies ☐ Vacuum Systems ☐ RF Systems ☐ Cryogenic Systems ☐ Experimental Equipment ☐ Beam Instrumentation ☐ Water Systems ☐ Buildings, Structures, and Shielding [x] Other: SCRF Cavity
Equipment Location: ☐ Tandem Van DeGraff ☐ Linac ☐ Booster ☐ AGS ☐ RHIC [x] 912 Experimental Area ☐ 919 Experimental Area ☐ RHIC Experimental Areas ☐ SNS _____ _____ ☐ Buildings, Structures, and Shielding ☐ Other _____	Associated information for cataloging (if available fill in the number): ☐ C-A D Design Room Job No. _____ [x] C-A D Design Room Drawing No. _010604045_____ ☐ C-A D Specification No. _____ ☐ C-A D Experiment No. _____ ☐ Other _____

Calculation of 5-cell cavity cooldown cycle life :

Integral Coefficients of Thermal Expansion for Niobium & Titanium at 2K.

$\alpha_{Nb} := 0.00143 \cdot \frac{in}{in}$ From BNL "Selected Cryogenic Data Notebook", Volume 1, Section IX-Q-1, 1980

$\alpha_{Ti} := 0.00151 \cdot \frac{in}{in}$ From Table 3.2, "Materials at Low Temperatures", R. Reed & A. Clark, American Society of Metals, 1983

$L_{5cell} := 53.53 \cdot in$ Length of 5-cell cavity (60.25") subtracting the distance to the anchor (6.72").

$\Delta L_{Nbthermal} := \alpha_{Nb} \cdot L_{5cell}$ $\Delta L_{Nbthermal} = 0.077 \cdot in$

$L_{HeVessel} := 42.21 \cdot in$ Length of Helium Vessel, from anchor to bellows

$\Delta L_{Tithermal} := \alpha_{Ti} \cdot L_{HeVessel}$ $\Delta L_{Tithermal} = 0.064 \cdot in$

Differential change in length between the helium vessel and the cavity:

$\Delta L_{Diff} := \Delta L_{Nbthermal} - \Delta L_{Tithermal}$ $\Delta L_{Diff} = 0.013 \cdot in$

The beam line contains two bellows that resist the thermal induced motion of the cavity.
The helium vessel bellows mounts directly to the cavity and sees only the differential change, ΔL_{Diff}.
The beam line bellows sees the total contraction in the cavity.

Spring rates: $Sp_{HeBellows} := 2670 \cdot \frac{lbf}{in}$ (AES drawing # A03H00101-A)

$Sp_{BT} := 117 \cdot \frac{lbf}{in}$ (AES drawing # A03J00103-A)

Loads delivered to cavity by bellows:

$F_{HeBellows} := \Delta L_{Diff} \cdot Sp_{HeBellows}$ $F_{HeBellows} = 34.205 \cdot lbf$ (tension)

$F_{BTBellows} := \Delta L_{Nbthermal} \cdot Sp_{BT}$ $F_{BTBellows} = 8.956 \cdot lbf$ (tension)

Total load to cavity during cooldown:

$F_{Total} := F_{HeBellows} + F_{BTBellows}$ $F_{Total} = 43.161 \cdot lbf$ (tension) **Acceptable**

Due to the relief valves, the cavity can see a maximum pressure of $P_{max} := 19.7 \cdot psi$

Stress induced in the cavity by the bellows forces:

Cavity beampipe diameter and thickness: $D_{BTid} := 9.472 \cdot in$ $t_{BT} := 3 \cdot mm$

$D_{BTod} := D_{BTid} + 2 \cdot t_{BT}$ $D_{BTod} = 9.708 \cdot in$

Stress area of beamtube exposed to forces $A_{BT} := \frac{\pi}{4} \cdot \left(D_{BTod}^2 - D_{BTid}^2\right)$ $A_{BT} = 3.558 \cdot in^2$

The "beamtube" apertures are the same on either end on the cavity. The beam tube (BT) bellows force opposes A-1 & is not added to the calculation to show a worst case scenario. A-2 is the force on the cavity from the helium vessel bellows.

A-1 (see FIGURE 1) $P_{vac} := 0 \cdot psi$

$\sigma_{Bellows} := \frac{F_{Total}}{A_{BT}}$ $\sigma_{Bellows} = 12.129 \cdot psi$ $\sigma_{Btotal} := \sigma_{Bellows}$ $\sigma_{Btotal} = 12.129 \cdot psi$ **Acceptable**

From the anchored side of the bellows the L is only 6.72 inches. This side has no helium vessel bellows component.

$L_{anchor} := 6.72 \cdot in$ $\Delta L_{NbAnchortherm} := \alpha_{Nb} \cdot L_{anchor}$ $\Delta L_{NbAnchortherm} = 9.61 \cdot 10^{-3} \cdot in$

A-2 (see FIGURE 1) $F_{BTAnchor} := \Delta L_{NbAnchortherm} \cdot Sp_{BT}$ $F_{BTAnchor} = 1.124 \cdot lbf$

$\sigma_{Anchor} := \frac{F_{BTAnchor}}{A_{BT}}$ $\sigma_{Anchor} = 0.316 \cdot psi$

$\sigma_{Atotal} := \sigma_{Anchor}$ $\sigma_{Atotal} = 0.316 \cdot psi$ **Acceptable**

The stresses in th ecavity convolutions are investigated below they are:
B-1) Meridional, B-2) Hoop, B-3) Shear, B-4) Hoop (BT) and B-5) combined.

Determine meridional and hoop stresses on the cavity due to pressure during cooldown.
From Roarks - 6th edition, Table 28, Eqns 4a (page 525)

B-1) Meridional stress (see FIGURE 2):

Pressure : $q := 14.7 \cdot psi + 5\ psi$ Atmospheric + relief valve setting pressure

R2 is the length of the normal from a point on the shell and the axis of rotation:

$R_2 := \frac{16.486 \cdot in}{2}$

t is the shell thickness : $t := 3 \cdot mm$

$\sigma_1 := \frac{-q \cdot R_2}{t}$ $\sigma_1 = -1.375 \cdot 10^3 \cdot psi$

Acceptable

B-2) Hoop Stress (see FIGURE 2)

Principal radius of curvature of the shell surface.
The cavity shape contains 2 radii, both are examined.

$R_{1a} := 1.4632 \cdot in$ $\quad R_{1b} := 1.7749 \cdot in$

$\sigma_{2a} := \frac{q \cdot R_2}{2 \cdot t} \cdot \left(2 - \frac{R_2}{R_{1a}}\right)$ $\quad \sigma_{2a} = -2.498 \cdot 10^5 \cdot psi$ **Acceptable**

$\sigma_{2b} := \frac{q \cdot R_2}{2 \cdot t} \cdot \left(2 - \frac{R_2}{R_{1b}}\right)$ $\quad \sigma_{2b} = -1.818 \cdot 10^3 \cdot psi$ **Acceptable**

Determing shear stress in the flat section of the cavity cells. $L_s := 3.6044 \cdot in$ Length of flat section

Diameter of the smaller ring appending flat: $D_s := 8.44 \cdot in$ (2X 4.22)

Diameter of the larger ring appending flat: $D_L := 15.28 \cdot in$ (2X 7.514)

Area defining the flat section

$D_m := \frac{(D_s + D_L)}{2}$ $\quad D_m = 11.86 \cdot in$ $\quad A_s := \pi \cdot D_m \cdot L_s$ $\quad A_s = 134.297 \cdot in^2$

Pressure loading on flat $P_L := q \cdot A_s$ $\quad P_L = 2.646 \cdot 10^3 \cdot lbf$

B-3 Shear Stress

Induced shear stress in cell wall (ring), induce total on smaller ring for worst case:

$A_{ring} := \pi \cdot D_s \cdot t$ $\quad A_{ring} = 3.132 \cdot in^2$

$\sigma_{flat} := \frac{P_L}{A_{ring}}$ $\quad \sigma_{flat} = 844.8 \cdot psi$ **Acceptable**

B-4 Hoop Stress in the beamtube

Determining hoop stresses in the "pipe" (BT) section of the cavity:
From Roarks - 6th edition, Table 28, Eqns 1b (page 518)

$D_{pipe} := 9.462 \cdot in$ $\quad R_{pipe} := \frac{D_{pipe}}{2}$

$\sigma_{pipe} := \frac{-q \cdot R_{pipe}}{t}$ $\quad \sigma_{pipe} = -789.099 \cdot psi$ **Acceptable**

Meridional stress in elliptical section "a" still dominates.

Combined Stresses include bending and those induced by pressure and the axial loads are scaled from ANSYS analysis. Scaling the AES ANSYS analysis for the 5-cell cavity (AES Tech Note 06-004) which showed an external pressure load of 44.1 psi induced a maximum bending stress of 7,854 psi:

$\sigma_{AES} := 7854 \cdot psi$ $\quad P_{stressmax} := 44.1 \cdot psi$

$P_{max} = 19.7 \cdot psi$

$\sigma_{induced} := \frac{\sigma_{AES} \cdot P_{max}}{P_{stressmax}}$ $\quad \sigma_{induced} = 3.508 \cdot 10^{3} \cdot psi$ (bending)

From ANSYS analysis done by C. Pai (12/12/07), it is known that a 7,600 lb load compressing the cavity would induce a bending stress of 13,673 psi. Scaling from this value:

$F_{compressing} := 7600 \cdot lbf$ $\quad \sigma_{compress} := 13673 \cdot psi$

$\sigma_{Bellows} := \frac{\sigma_{compress} \cdot F_{Total}}{F_{compressing}}$ $\quad \sigma_{Bellows} = 77.65 \cdot psi$ (bending)

This bellows bending stress opposes the pressure load induced bending stress. The result is:

$\sigma_{BendTotal} := \sigma_{induced} - \sigma_{Bellows}$ $\quad \sigma_{BendTotal} = 3.431 \cdot 10^{3} \cdot psi$ (bending) **Acceptable**

All cavity stress calculated are significantly less than the material yield strength. The highest stress number for the cavity components is the bending stress at 3,431 psi < 7,000 psi the yield strength of the niobium. The assembly will never reach 50% of RT yield, therefore under these loads **the cavity cannot reach its fatigue limit during cooldown.** This estimate doesn't take advantage of: a) the fact that Niobium's yield strength continues to increase as it cools (ref. 1,2 3) until at 2K it is a minimum of 4 times the yield strength at RT and b) it is estimated the cavity will experience < 1000 cycles in it's service life.

Reference 1: Walsh, R.P., Mitchell, R.R., et.al, "Low Temperature Tensile and Fracture Toughness Properties of SCRF Cavity Structural Materials"; Proceedings of the 9th Workshop on RF Superconductivity, Santa Fe, NM 1999. [Table 2]

Reference 2: Kneisel, P., Mammosser, J. et.al., "Superconducting Cavities from High Thermal Conductivity Niobium for CEBAF", Proceedings of the Conference on Electron Beam Melting and Refining, Reno, NV 1990. [Table II]

Reference 3: K. Mukugi, K. Ishio, et.al., "Fracture Toughness and Mechanical Properties of Pure Niobium and Welded Joints for Superconducting Cavities at 4K", Proceedings of the 9th Workshop on RF Superconductivity, Santa Fe, NM 1999. [Figure 1]

FIGURE 1

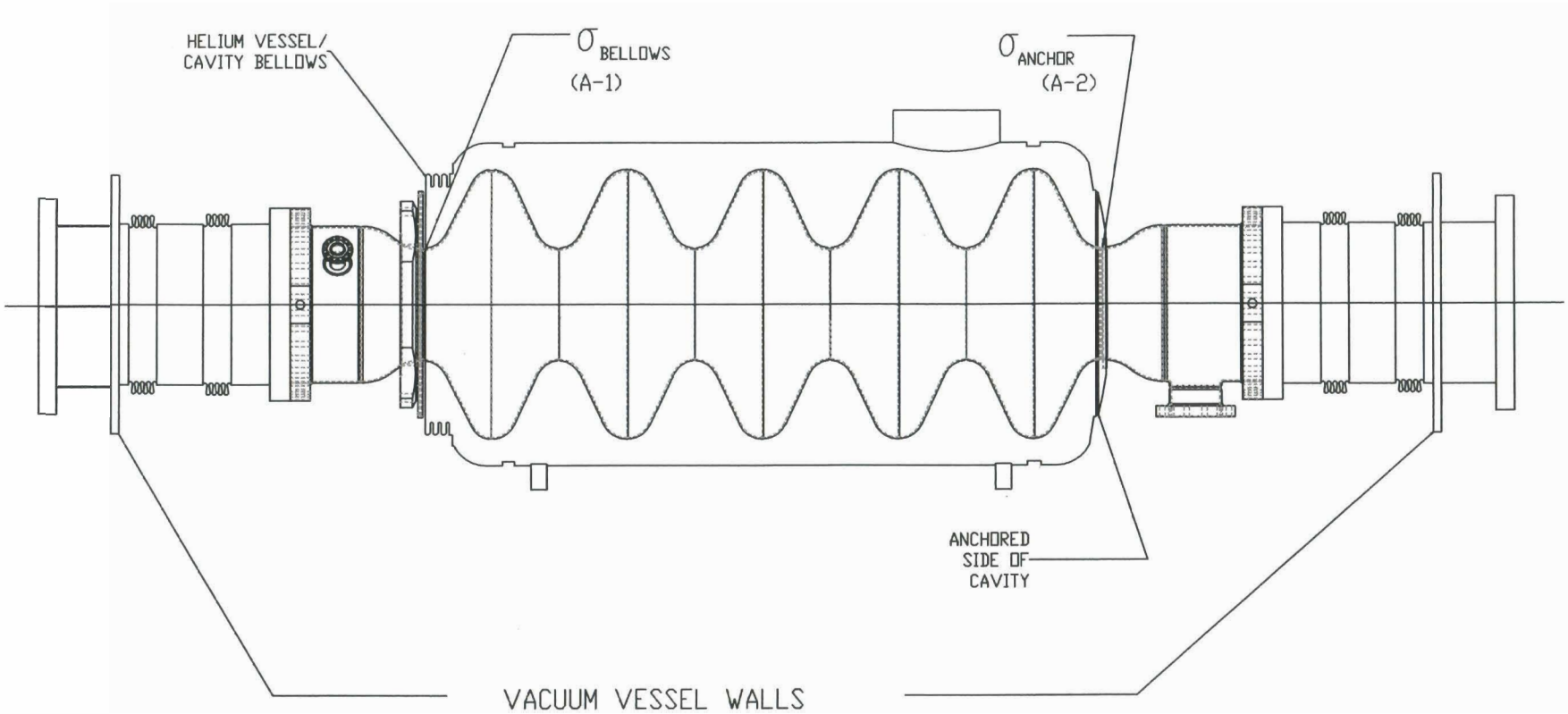

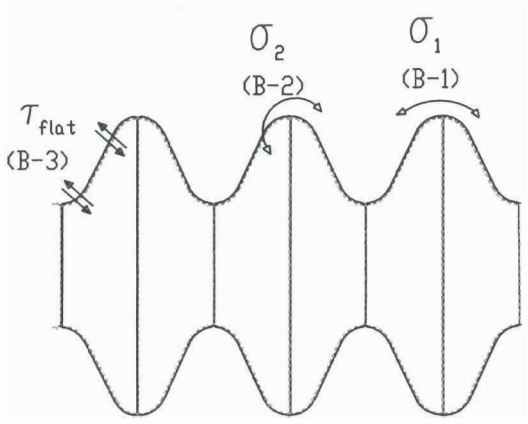

FIGURE 2

Von Mises Stress Under Full Tuner load

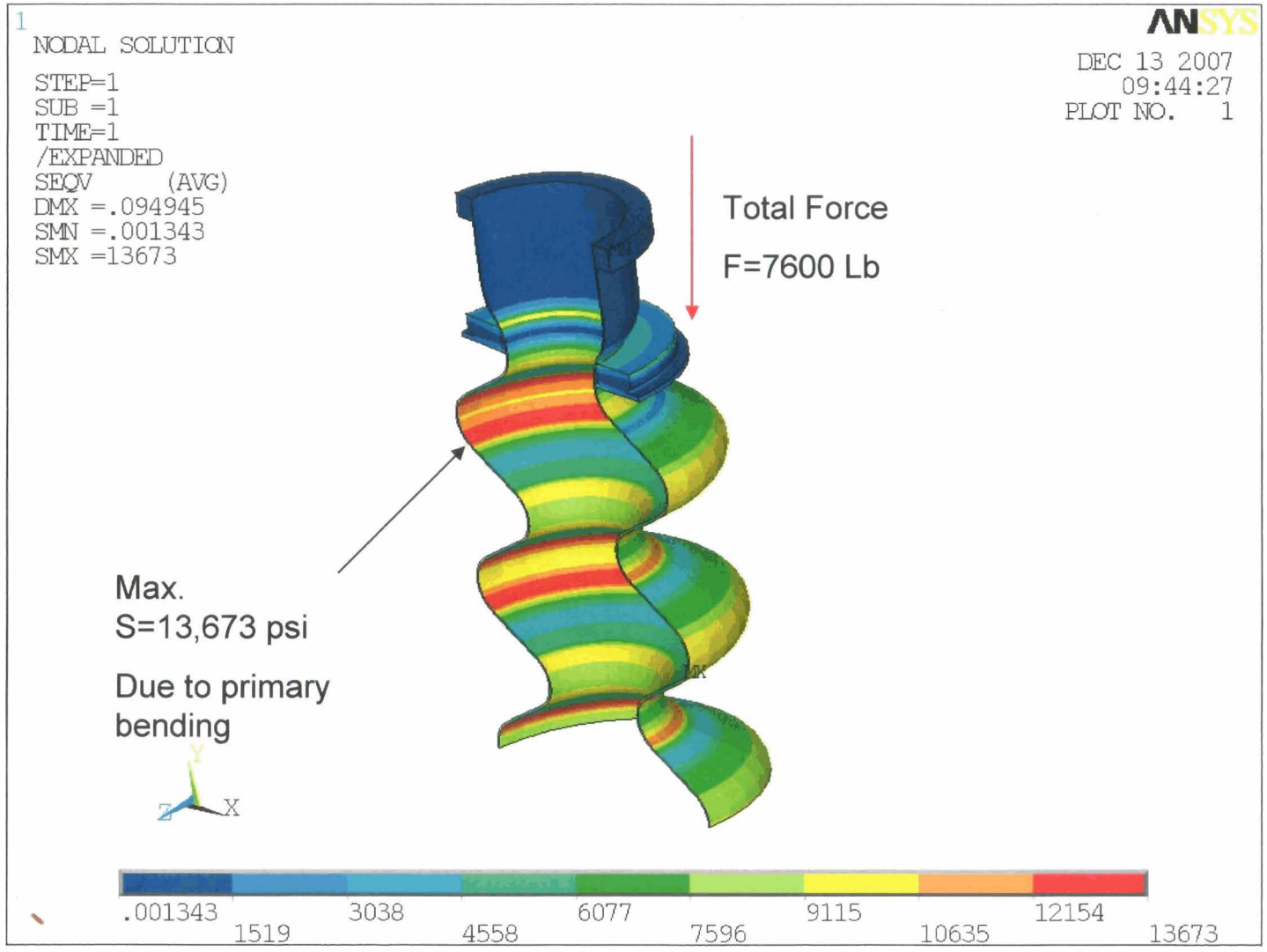

Psi

BNL eCx Helium Vessel Pressure Analysis

Doug Holmes, Mike Falletta

AES Tech Note 06-004
March 24, 2006

The BNL e-Cooler experiment niobium cavity was analyzed using Finite Element Analysis (FEA) to investigate cavity stresses resulting from pressure loads inside the helium vessel surrounding the cavity. From this analysis, a maximum helium vessel pressure of 26 psi was established to avoid damage to the niobium cavity. The effects of this pressure on the helium vessel configuration were looked at to verify the helium vessel design. This document reviews the details of this analysis.

An FEA model of the niobium cavity was created using ANSYS. The model included a helium pressure load of 3 atmospheres (44.1 psi) applied to the cavity external surfaces located inside the helium vessel and the inside faces of the helium vessel dished heads at the cavity ends. The cavity was held fixed at the helium vessel dished head on one end and unrestrained at the other end. Details of the FEA model are shown below.

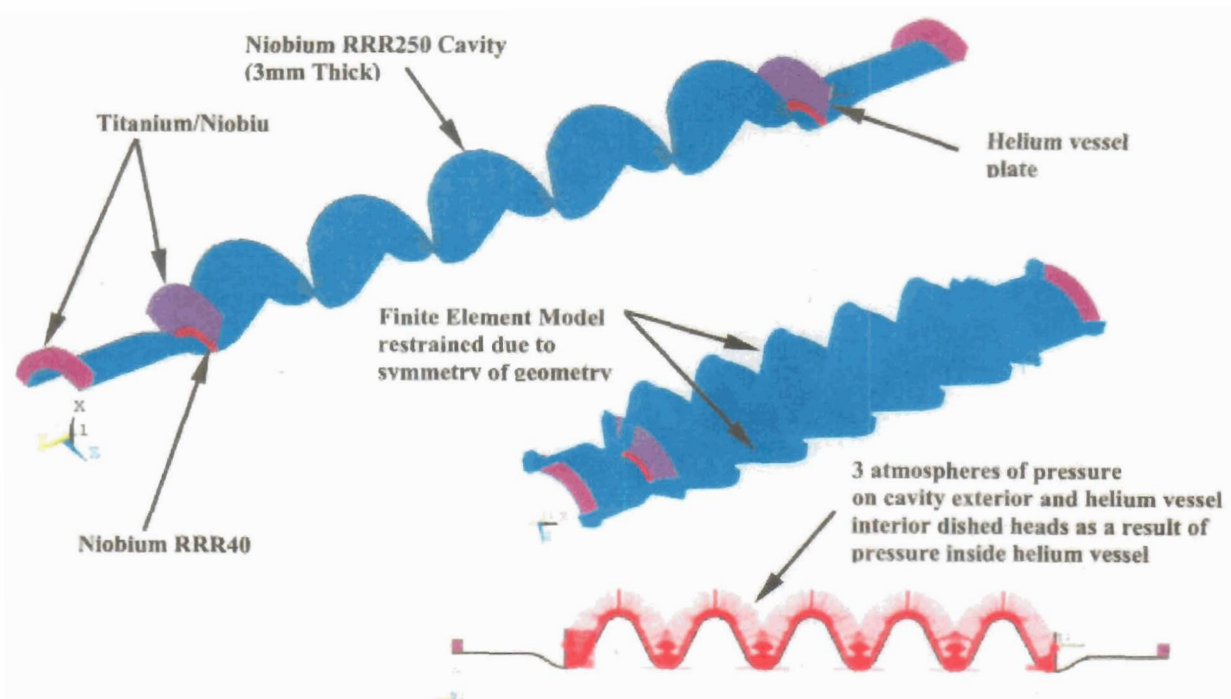

FEA calculations indicate a cavity maximum deflection of .053 inches and a cavity maximum stress of 7,854 psi due to the 44.1 psi helium pressure. These results are shown below.

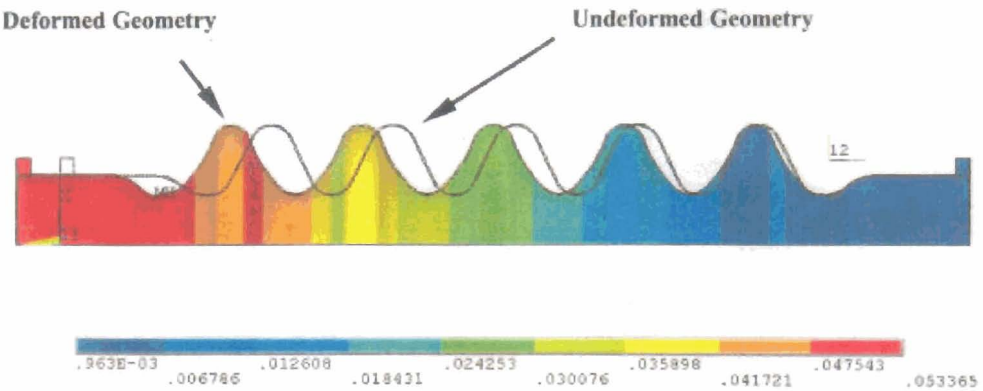

Cavity Deflection (inches)

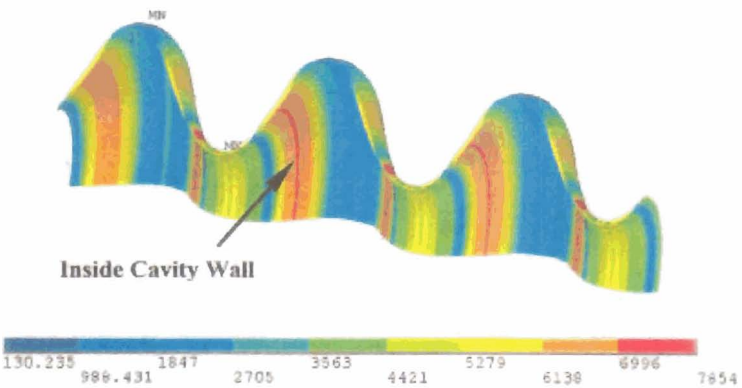

Cavity Stress (psi)

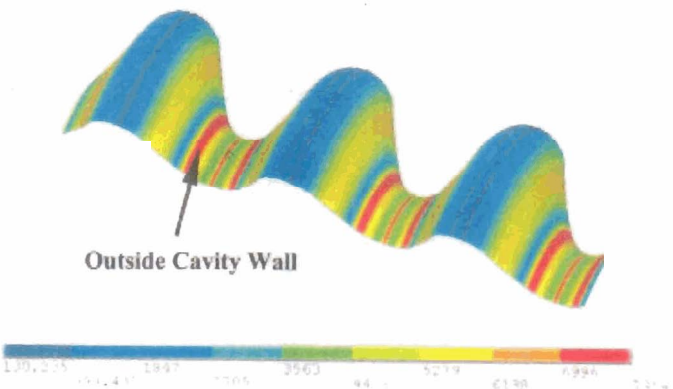

Establishing the allowable cavity stress as no more than 2/3 of the niobium RRR minimum yield stress of 7000 psi, we have a cavity stress allowable of 4660 psi. Scaling from a cavity stress of 7,854 psi caused by 3 atm (44.1 psi) helium pressure, we arrive at an allowable helium pressure of 26 psi to assure we don't exceed the allowable stress level in the cavity. 26 psia is therefore the recommended maximum relief valve pressure setting for the 2K helium system.

The allowable pressure for the helium vessel configuration is calculated based on the ASME Boiler and Pressure Vessel Code, Section VIII, Rules for Construction of Pressure Vessels, Division I. Subsection A, Part UG-27 Thickness of Shells Under Internal Pressure offers the following formula for circumferential stress on cylindrical shells:

$P = S E t / (R + 0.6t)$

Where: P = allowable pressure (psi)
S = max allowable stress value of 12,500 psi for titanium grade 2, per ASME Code, Subsection C, Table UNF-23.4, 100 degrees F max temperature
E = 0.85 for full penetration butt weld, spot examined per ASME Code, Subsection B, Table UW-12
t = .188 inches material thickness
R = 9.813 inches inside radius

Resulting with an allowable pressure of 201 psi in the helium vessel

The formula for longitudinal stress on cylindrical shells is:

$P = 2 S E t / (R - 0.4t)$

Where: E = 0.45 for full fillet lap weld joints per ASME Code, Subsection B, Table UW-12

This formula yields an allowable helium vessel pressure of 217 psi.

These calculations indicate the helium vessel design is adequate to withstand helium pressures expected during operation.

C-A D Engineering Design Support Documentation Cover Page

Document number: A03G00001-QAR-01	
Title: MEMO on Cavity Material	**Author**: Y. R. Than
Subject:	
C-A Department Group: Cryogenic Systems Group	**Approval**:
Documentation Type **[ ] Written Technical Paper** **[ ] Design Calculations** **[ ] Design Review Presentation** **[ ] Design Certification** **[ ] Specification** **[ ] Procurement Documentation** **[ ] Safety/ALARA Review Presentation** Other Memo	**Equipment Type** **[ ] Magnets and Power Supplies** **[ ] Vacuum Systems** **[ ] RF Systems** **[ ] Cryogenic Systems** **[ ] Experimental Equipment** **[ ] Beam Instrumentation** **[ ] Water Systems** **[ ] Buildings, Structures, and Shielding** Other
Equipment Location:	**Associated information for cataloging**
[ ] Tandem Van DeGraff	**[ ]** CA-D Design Room Job No.
[ ] Linac	
[ ] Booster	**[ ]** CA-D Design Room Drawing No
[ ] AGS	
[ ] RHIC	**[ ]** CA-D Specification No
[ ] 912 Experimental Area	
[ ] 919 Experimental Area	**[ ]** CA-D Experiment No.
[ ] RHIC Experimental Area	
	[ ] Other
[ ] Buildings Structures, and Shielding	
Other ERL	

ERL CAVITY MATERIAL

In general the cavity and helium vessel shall be designed and manufactured in accordance with ASME BPVC VIII Div.1. Niobium would fall under part UNF: *Requirements for pressure vessels constructed of nonferrous materials, however* Niobium is not listed as an ASME BPVC VIII material.

A design basis for an exception from this requirement is based on experience with this material used for superconducting cavities built and in use throughout facilities all over the world combined with careful design of containment systems should allow niobium to be an acceptable material choice.

Containment
The Niobium cavity forms the boundary between the accelerator beam tube vacuum space and the liquid helium bath side. On the beam vacuum side the cavity is contained by the beam tube, on the helium side the cavity is contained by the Titanium vessel, which in turn is contained by the insulating vacuum vessel.

Maximum Allowable Working Pressure MAWP
The MAWP will be set at 20 psia, which will give a peak stress of 3500 psi or ½ of Yield at room temperature with a factor of safety greater than 5 (Code is 3.5).

Material certification

The Niobium material used for the cavity has been chemically analyzed.

Material Strength Tests

Mechanical strength tests have been carried out to determine yield and tensile properties.

Table 1.1 Mechanical Properties Niobium (RRR Grade)

	Room Temperature	Cryogenic Temperature 4K
Modulus	1.49 E+07 psi	1.79E+07 psi
Poisson Ratio	0.38	0.38
Yield	7.0 ksi	83 ksi
Ultimate	20 ksi	

Pressure Test
The Cavity will be pressure tested at room temperature at 110% of MAWP.

Laboratory Environment Safety and Health Committee
Pressure and Cryogenic Safety Subcommittee

MINUTES OF MEETING 07-13

June 5, 2007

FINAL

Committee Members Present	Committee Members Absent
D. Beavis	R. Alforque
C. Conrad* (Secretary)	S. Kane
R. Karol	M. Rehak
E. Lessard (Chairperson)	R. Travis
P. Mortazavi	
J. Tuozzolo	
K. C. Wu	

(* non-voting)

Visitors
A. Burrill
D. Pate
T. Tallerico
R. Than

Agenda:
1. Review of Energy Recovery Linac (ERL) Cryostat with 1.3 GHz Superconducting Radiofrequency (SCRF) Gun

Minutes of Meeting: Appended on pages 2 through 5.

ESH COMMITTEE MINUTES APPROVED:

_[Signature on File]_____	**6/18/07_**	**_[Signature on File]_ _ _**	**6/25/07__**
E. Lessard	**Date**	**J. Tarpinian**	**Date**
LESHC Chairperson		**ESH&Q ALD**	

Chairperson E. Lessard called the meeting of the Laboratory Environment Safety and Health Committee (LESHC) Pressure and Cryogenic Safety Subcommittee to order on June 5, 2007 at 3:05 p.m.

1. **Review of Cryostat for Single Cell RF Gun Testing:** A. Burrill described the preliminary test of the top loading cryostat and vacuum vessel which will be used with a 1.3 superconducting RF gun.[1] Mr. Burrill and other attendees made the following points during the course of the presentation and in response to specific Committee questions:

1.1. The purpose of this preliminary test is to see if this top loading cryostat functions as expected and to make some static loss baseline RF measurements with a network analyzer in the cavity.

1.1.1. This test is similar to that done a couple of years ago, except that this vacuum vessel uses a new top loading cryostat, instead of a bottom loading cryostat, and the vacuum vessel will be filled with LHe from a 250L dewar instead of from a 500L dewar.

1.2. The 105 liter capacity LHe vacuum vessel is an off-the-shelf standard research unit manufactured by International Cryogenics.

1.2.1. The vacuum vessel will have a uni-strut frame, a welded assembly and baffles inside, superinsulation, and will be grounded.

1.2.2. The vacuum vessel is 64" high with an O.D. of 24", 14.9" I.D. in the throat, 20" I.D. in the belly, and 14.9" I.D. in the lower part.

1.2.3. Immersed inside the LHe volume are a stainless steel beam pipe, the superconducting gun, RF cables, and an all metal gate valve.

1.2.4. The unit was acquired in December 2006 and is listed as one of C-AD's dewars or pressure vessels; therefore it is prior to ASME requirements.

1.2.5. The vacuum vessel has a burst disk with 12 holes, each 1/8" in diameter to go off at 19-21 psia or 4-6 psig outside the vessel.

1.2.6. If the vacuum vessel filled with 100L He ruptures, it will dump He into the vacuum vessel and the burst disk and all other relief valves on the top plate will activate at the same time due to massive temperature change.

1.2.7. If there is catastrophic failure, and the integrity of a weld is lost to the bottom of the vacuum space, all relief valves will be activated.

1.2.8. Relief valves will be positioned so that the discharge will be directed away from surrounding people.

1.2.9. **6/6/07 Addendum**: D. Pate, "The cryostat specification indicates that the inner and outer vessels can withstand external pressures of 60 psi in collapse."

1.2.10. Liquid will be filled up to top of second liquid volume (20" ID volume)**.**

1.3. The top plate (< 100 lbs.), manufactured by International Cryogenics, is modified based on BNL specifications**,** and is needed so that there is no air mixing**.**

[1] Mr. Burrill's presentation and these Minutes are posted on the LESHC website: http://www.rhichome.bnl.gov/AGS/Accel/SND/laboratory_environment,_safety_and_health_committee.htm.)

1.3.1. The top plate is removable (much easier to get into, thereby make changes easier), has 3 lifting lugs (eyes), and underneath is an O-ring seal bolted down, with bolts every 6".

1.3.2. The top plate has been certified by the vacuum group to be vacuum tight.

1.3.3. Located on the top plate are the following:

1.3.3.1. Two brass ports: one is the LHe fill and one is for venting to the outside. Each has a relief valve, one set at 1 psi and the other set at 4 psi.

1.3.3.2. Five 2-3/4" O.D. flanges for the following purposes:

1.3.3.2.1. One flange will be for pumping out 2K and relief.

1.3.3.2.2. One flange will hold 5 temperature sensors which will monitor the state of He inside the cryostat.

1.3.3.2.3. One flange is for a 100 watt pad heater to protect the niobium gun against Q-disease (100-160K).

1.3.3.2.3.1. The heater is used to speed the warmup (go from 60-160K as fast as possible), will be controlled externally, and has a setpoint of 300 at which point it trips off. Once slightly above room temperature, it turns off.

1.3.3.2.3.2. The heater will be mounted either on the face of the gun (about 4' down in the dewar) or on the bottom of the vessel so no one will be able to reach down and touch it.

1.3.3.3. Two flanges for RF signals from the network analyzer.

1.3.3.4. A port for the LHe level probe.

1.3.3.5. A large 4.625" O.D. flange to which the 1.3 GHz SC gun will be connected.

1.4. The first test involves cooling down the vessel to 4K (approximately 4-5 hours), filling the 105 liter dewar with He from a 250L He dewar (approximately 1 day), and then taking measurements as long as there is liquid. If the static load is similar to what was in the other dewar in bldg. 939, there will be liquid for the better part of a day.

1.4.1. Proper PPE will be worn during the test.

1.4.2. To address ice buildup, if necessary, a bumble bee hose will be obtained to get further away out the rollup door; there are trenches in the area.

1.4.3. The operators, experienced C-AD cryogenics group qualified personnel, as well as personnel from the cryo mechanical and instrumentation groups will work in groups of 2 and the unit will not be left unattended during the test.

1.4.4. During cooldown, there will be a level sensor, SC gun, and diodes in the vacuum vessel.

1.5. Proposed test sites:

1.5.1. The first proposed site for the test was against the small exterior partition wall where the refrigerator would be going. The lighting was not good there.

1.5.2. The second proposed test site was outside the block house between the skin wall and one of the openings, a width of 5-8 feet, where there are radiation postings.

1.5.3. The test will be done in the EEBA area outside the skin area of bldg. 912, where it is away from construction crews. **6/7/07 Addendum**: The FS Rep, Paul Bergh, met with David Pate and worked and deposted an area on the other side of the ERL wall that provides a large free area in which to conduct the tests. On the sides that

are not posted with magenta/yellow (radiation rope), stanchions and caution tape will be used with postings to warn individuals of the use of cryogens. An alley way for forklifts to come and go between buildings will be maintained.

1.5.4. There will be postings indicating that the process is in place and barricades to control traffic and limit the people who wander into the area.

1.6. ODH concerns were addressed. The ODH calculation, done for the previous test in building 939 for 1500L, was ODH-0, and this test will be using 250L.

1.6.1. The volume that is chosen to mix the cryogen with when performing the ODH-0 determination has to be relatively accurate.

1.6.2. A lot of EEBA is taken up by the block house which has a roof on it. Therefore, HE will probably go up and into the space above the block house. That volume is probably 15% of bldg. 912.

1.7. Future plans:

1.7.1. In order to do the experiment, the block house has to be done, the RF system has to be in place, and there have to be laser interlocks.

1.7.2. A liquid ring ERL pump to establish 1.8K operation will be connected to the vertical test dewar when operated in the block house.

1.7.3. When relocated to the block house, the vacuum vessel will be secured by its lifting lugs and, using threaded rods, will be mounted to a dead head on a shielding block or to a wall for stability.

1.7.4. **6/6/07 Addendum**: David Pate, "Shift the large conflat flange (4-5/8") which resides on the top plate of the vertical vacuum vessel that we reviewed yesterday. An identical top flange is being manufactured by International Cryogenics Inc. which will have the 4-5/8" flange off set from the center. This is to allow the Angle valve that is attached to the RF gun to pass into the bottom section of the LHe volume (as shown in the AES presentation)."

1.8. The following motion was crafted by the Committee: The Committee approves the cryogenic testing of the test dewar in Building 912 subject to the following conditions:

1.8.1. Properly position the relief valves such that any liquid discharged is away from surrounding people. (See 1.2.8)

1.8.2. Provide the calculations used to determine the size of the relief valves. (See 1.3.3.1) **Complete. 6/15/07 Addendum**: R. Than, "The 2K pumpout port and relief is sized for loss of insulating vacuum with MLI insulation , 0.5 W/cm^2 heat flux."

1.8.3. Indicate what material the dewar is made of. If it's commercially available, provide the spec from the web, or if you wrote a spec, provide that. **Complete**. **6/6/07 Addendum**: D. Pate, "This is the Link to the Manufacture's website for Belly Dewars: http://www.intlcryo.com/popups/cryostat.htm. It gives statements in regards to material, insulation, burst disc and design pressures to collapse for the inner and outer vessel. I verified with the vendor that the vessel we have was made of 3003 Aluminum and the top plate is 304/316SS. The Manufactures part number is 21-10140 which is a standard vessel and top plate modified to meet our internal needs. The Top Plate has had some flange sizes changed as per the drawing Andrew

Burrill presented yesterday. The changes are called out in the revision section of the Top Plate drawing."

1.8.4. Provide the design technical specification and/or BNL web req. (See 1.2)

1.8.5. Have the lifting lugs on the top plate of the cryostat inspected, certified and checked for accepted manufacturer's markings. **Complete. 6/6/07 Addendum**: Joel Scott has done this and they are properly marked and OK for use.

1.8.6. Rewrite the SOP just for the test, including something about the watch, how you will transfer on the shifts, and approximately how long the test will last. (See 1.4)

1.8.7. Provide a sketch of the gas flow system for the He gas.

1.8.8. Move the vacuum vessel outside the EEBA area for testing and put a barricade and postings in the test area. **Complete**. **6/7/07 Addendum**: The FS Rep, Paul Bergh, met with David Pate and worked and deposted an area on the other side of the ERL wall that provides a large free area in which to conduct the tests. On the sides that are not posted with magenta/yellow (radiation rope), stanchions and caution tape will be used with postings to warn individuals of the use of cryogens. An alley way for forklifts to come and go between buildings will be maintained.

1.8.9. Include leather shoes as part of the PPE requirements. (See 1.4.1)

1.8.10. Ground the heater. (See 1.3.3.2.3)

1.8.11. The cryovessel should be anchored and grounded. (See 1.7.3)

1.8.12. Contact the LESHC Secretary to schedule a walkthrough prior to any operation of this experiment.

1.9. Joe Tuozzolo made a recommendation for approval of the Motions.

1.10. Seconded by R. Karol.

1.11. The motions were approved by a vote of 6 in favor and none opposed.

2. The meeting was adjourned at 4:25 p.m.

GaAs Cathode Experiment Concept

D. Holmes

March 5th, 2007

GaAs Cathode Preparation, Installation and Test Sequence

- Attach GaAs material to cathode “plug”
- Activate/Cesiate GaAs in process chamber at ~10E-11 Torr
- Remove cathode from process chamber into transport system while under vacuum
- Attach transport system to gun hermetic assembly
- Insert and secure cathode “plug” into gun while under vacuum
- Remove transport system from gun and prepare gun hermetic assembly for cool down
- Install gun hermetic assembly in cryostat
- Perform tests

1.3 GHz Cavity Modification for cathode "Plug"

Advanced Energy Systems, Inc.

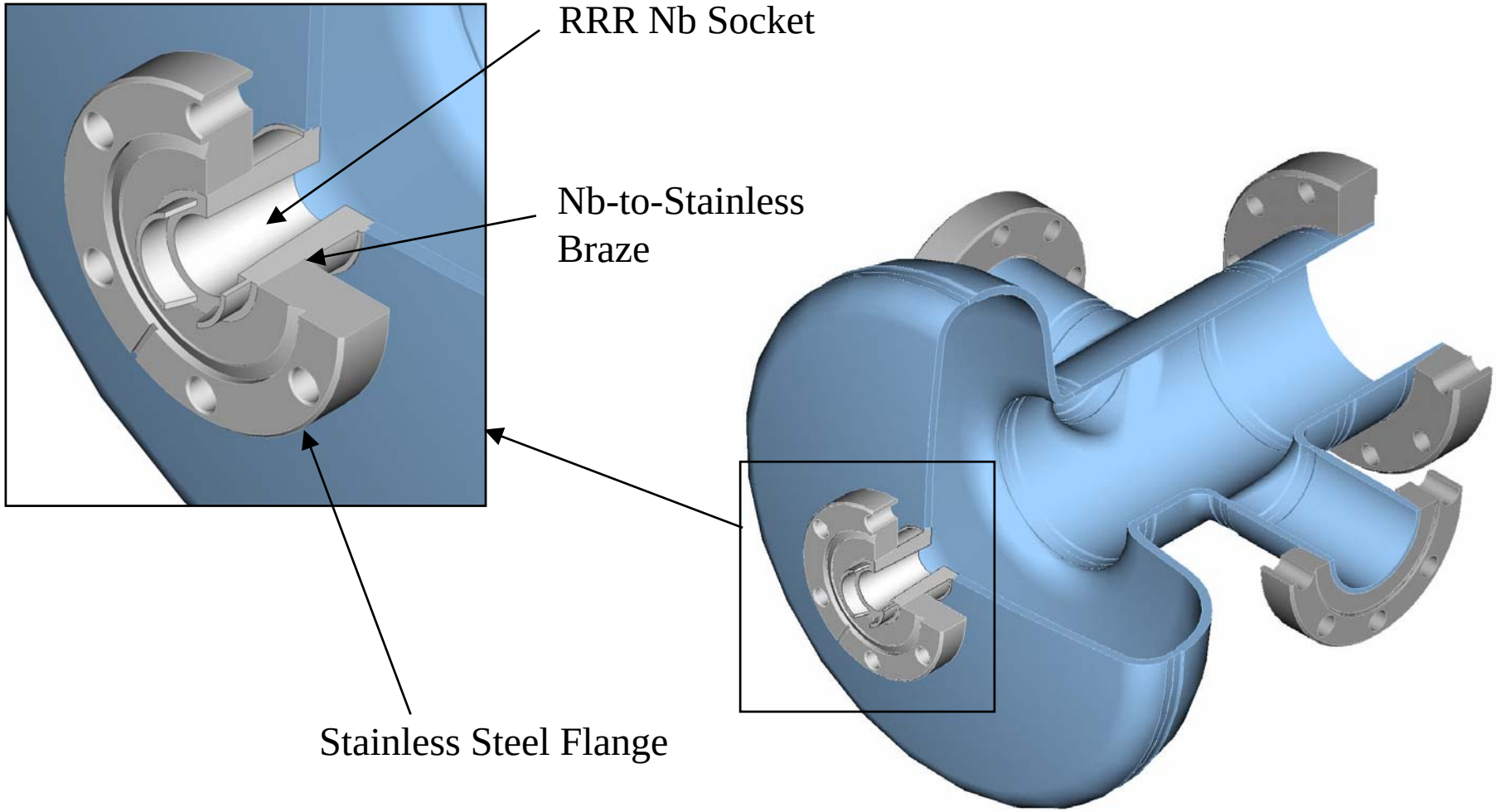

BROOKHAVEN NATIONAL LABORATORY

Jefferson Lab

Advanced Energy Systems, Inc.

Cathode Attachment and Transport

Advanced Energy Systems, Inc.

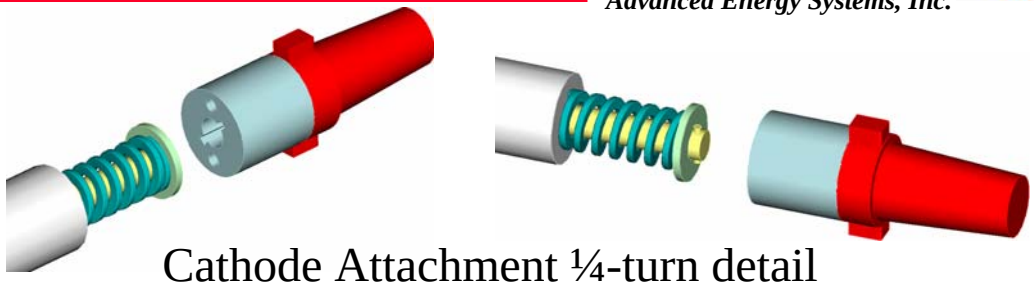

Cathode Attachment ¼-turn detail

Magnetically Coupled Transport

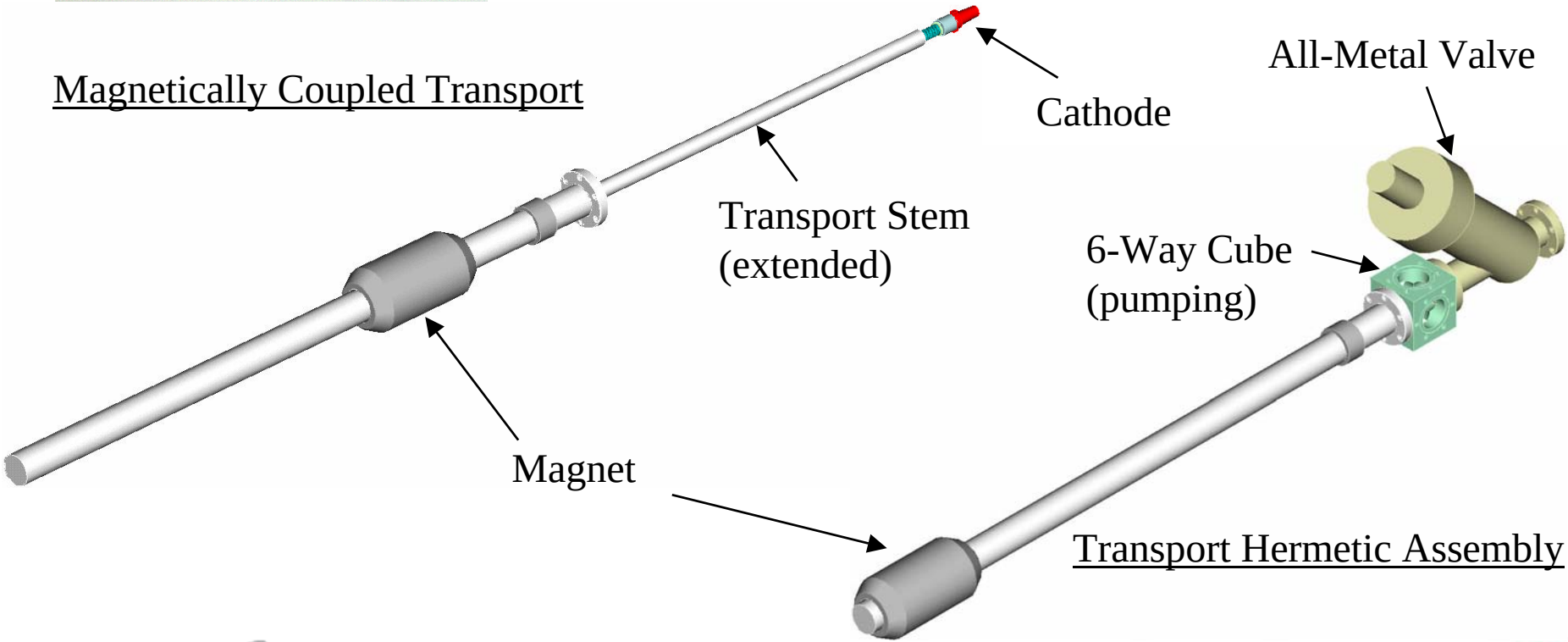

Transport Hermetic Assembly

BROOKHAVEN NATIONAL LABORATORY

Jefferson Lab

Advanced Energy Systems, Inc.

Cathode Activation and Processing

Advanced Energy Systems, Inc.

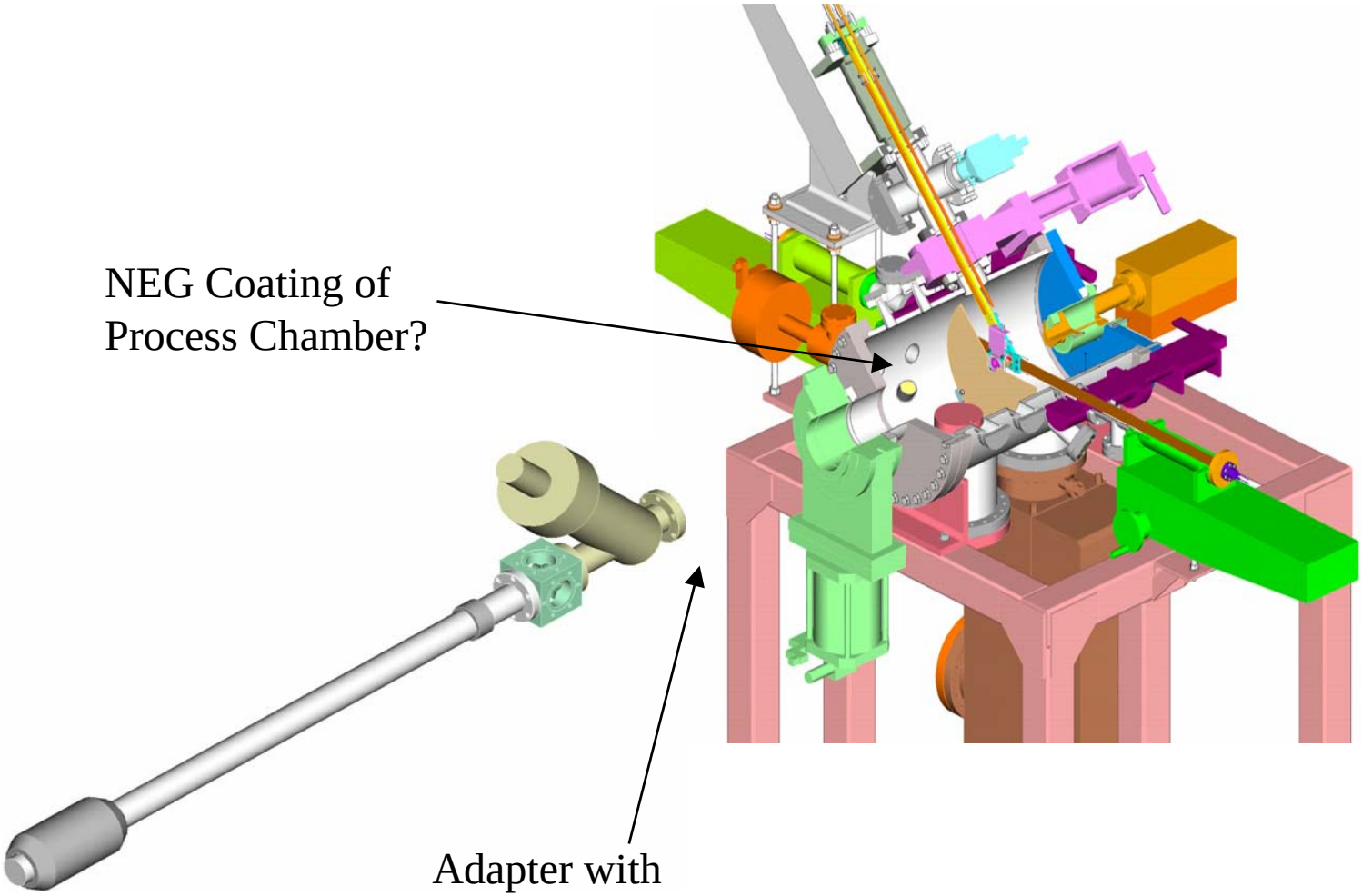

BROOKHAVEN NATIONAL LABORATORY

Jefferson Lab

Advanced Energy Systems, Inc.

Cavity Hermetic Assembly Components

Advanced Energy Systems, Inc.

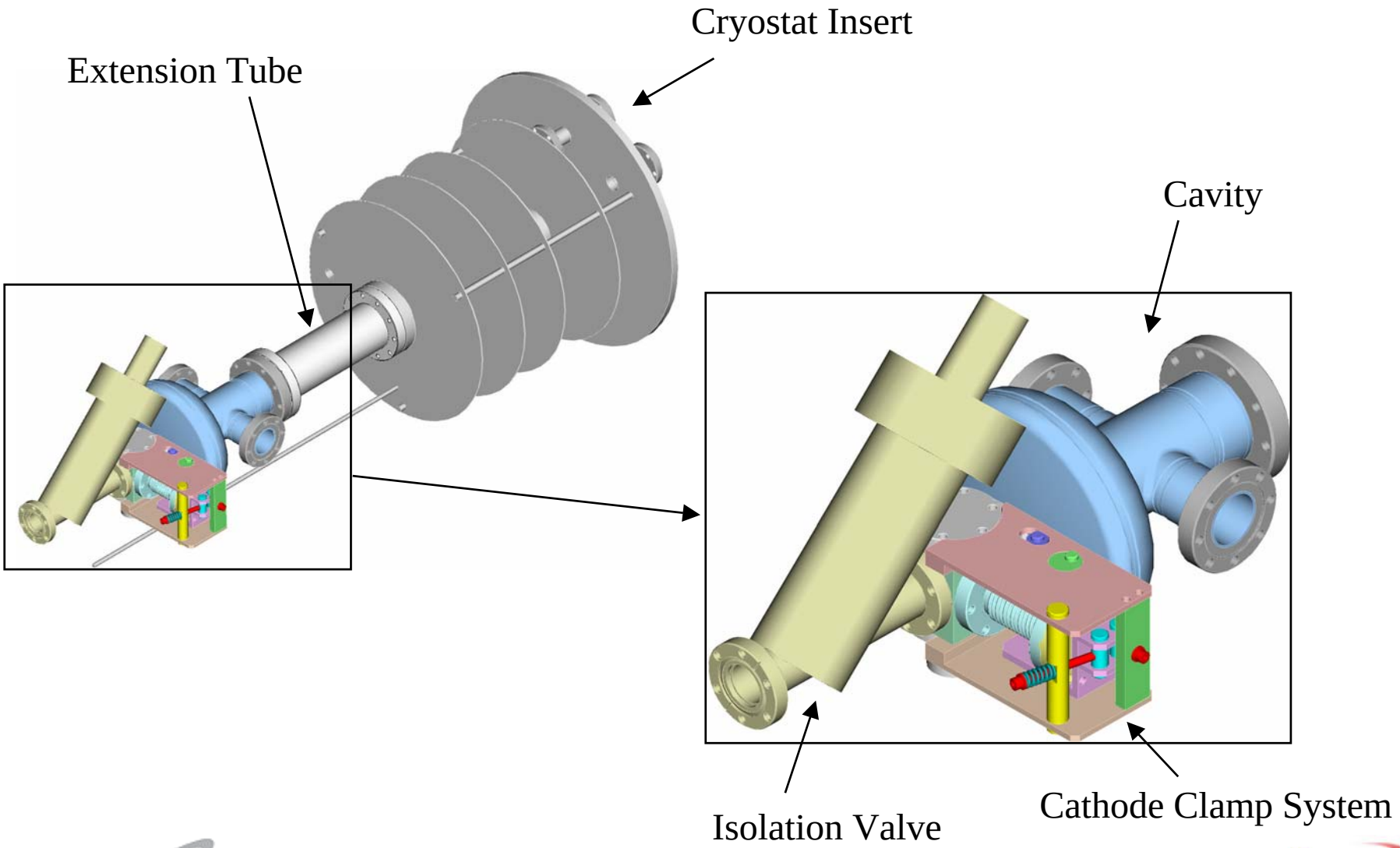

BROOKHAVEN NATIONAL LABORATORY

Jefferson Lab

Advanced Energy Systems, Inc.

Cathode Insertion String

Advanced Energy Systems, Inc.

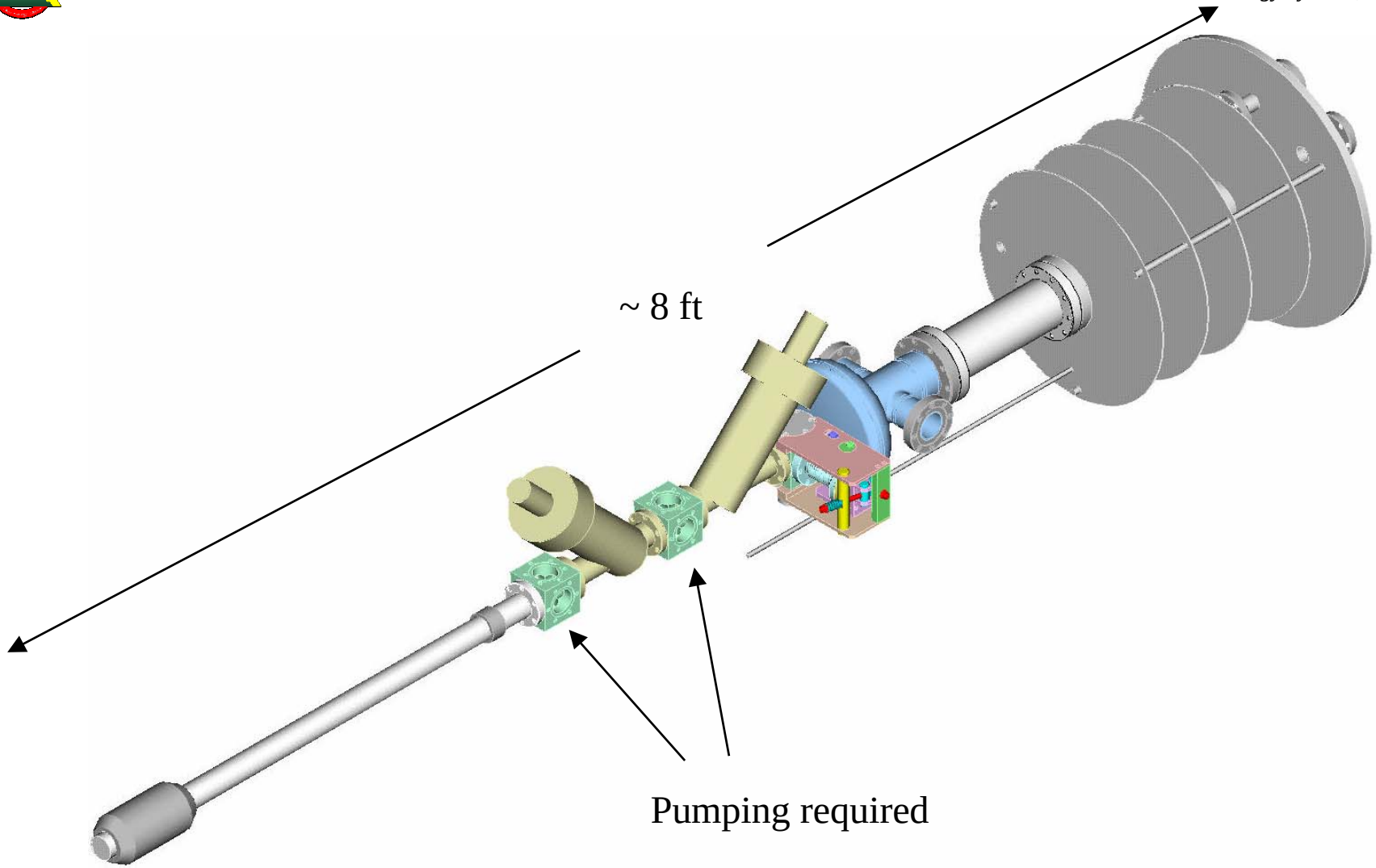

BROOKHAVEN NATIONAL LABORATORY

Jefferson Lab

Advanced Energy Systems, Inc.

Cathode Clamp System

Advanced Energy Systems, Inc.

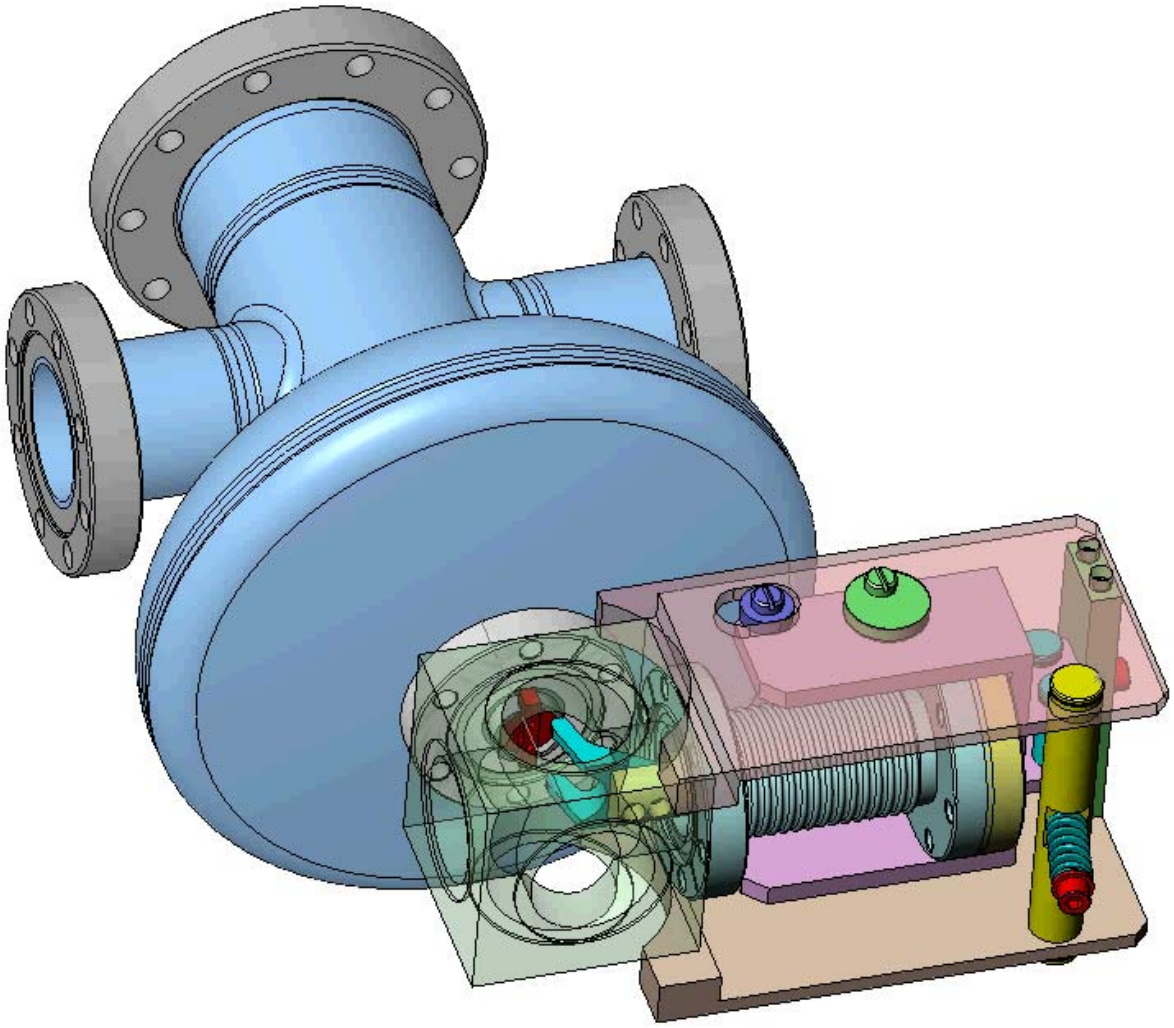

Test Setup

Advanced Energy Systems, Inc.

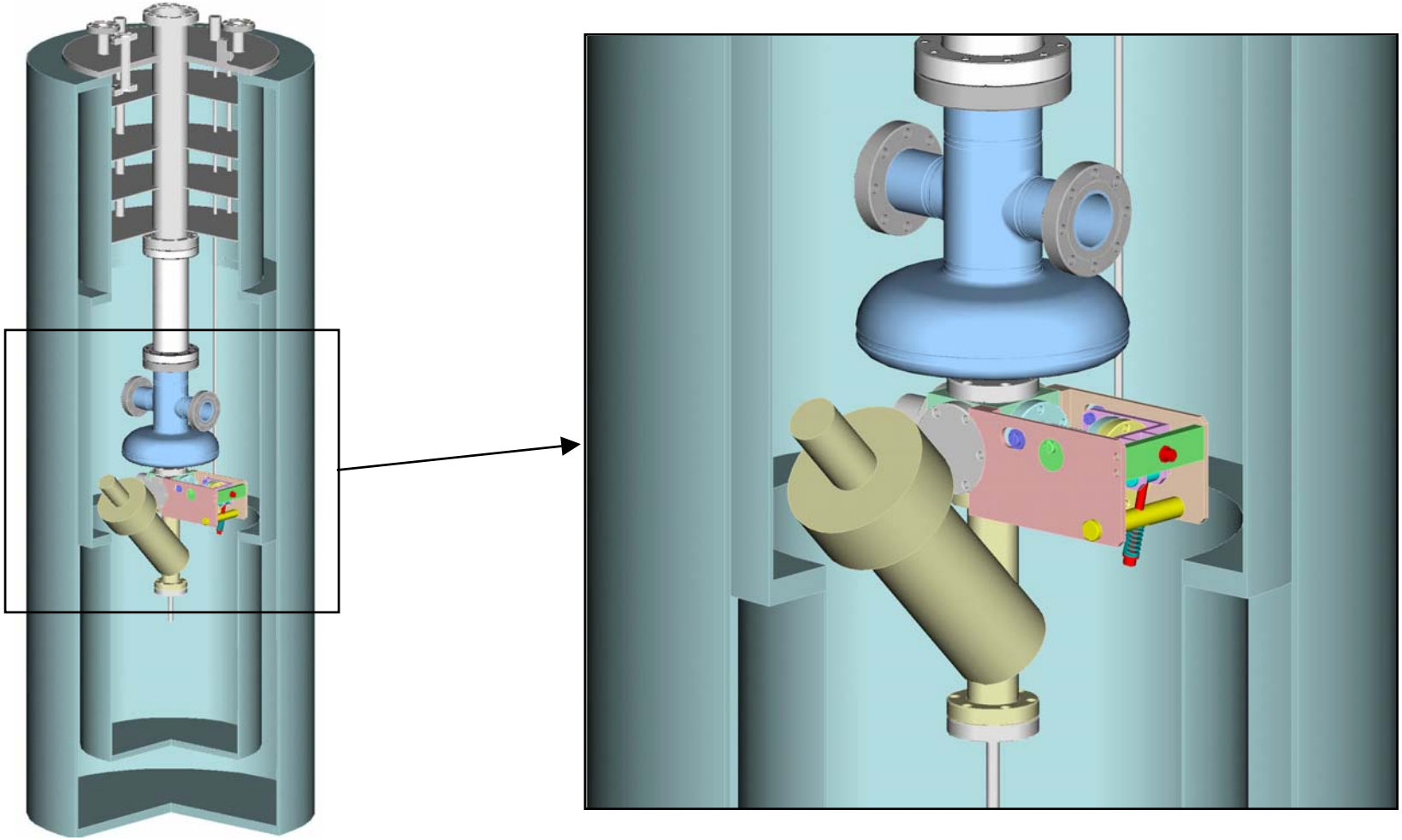

C-AD Hazard Identification Tool Version 5.0, Interactive Form

Please answer all 18 questions on the next few pages and then print the form.

Return a copy of the completed questionnaire to the Accelerator System Safety Review Committee Chair or the Experimental Safety Review Committee Chair.

All questions should be answered. Indicate not applicable if all answers to subquestions are no.

Contact E. Lessard (x4250) or R. Karol (x5272) if you need assistance in completing form.

Name of Project or Experment:	GaAs CATHODE EXPERIMENT
Contact Name:	DR RANJAN GROVER
Email Address:	RGROVER@BNL.GOV
Date/Time Field	3/20/07

1. ◯ yes ◯ no Are there any accelerators or other radiation generating devices involved in this operation? ◯ not applicable

1a. ◯ yes ◯ no Is there an accelerator used in this operation?

1a(1). ◯ yes ◯ no Is the accelerator located off-site?

1a(1)i. ◯ yes ◯ no Does this operation use accelerators that are built locally or are commercially available units that have been modified?

1a(1)ii. ◯ yes ◯ no Is the accelerator capable of producing alpha contamination?

1b. ◯ yes ◯ no Are there any radiation generating devices (RGD) used in this operation?

1b(1). ◯ yes ◯ no Are radiation generating devices capable of creating a High Radiation Area (>100 mrem/hr at 30 centimeters)?

1b(2). ◯ yes ◯ no Are the radiation generating devices capable of creating a radiation area (>5 mrem/hr at 30 centimeters but <100 mrem/hr)?

1c. ◯ yes ◯ no Does the radiation generating device only produce radiation incidental to its primary function (such as electron microscopes, electron beam welders, ion implantation equipment)?

1c(1). ◯ yes ◯ no Does this operation use RGDs that are built locally or are commercially available units that have been modified?

1d. ◯ yes ◯ no Is the radiation generating device an intentional x-ray generating device which produces radiation as part of the primary function (i.e. x-ray diffractometers, x-ray machines)?

1d(1). ◯ yes ◯ no Is the device built locally or been modified OR is it being used outside design specifications?

2. ◯ yes ⊗ no Are radioactive materials (including sealed sources and wastes) generated, handled, processed, used or stored? ◯ not applicable

2a. ◯ yes ◯ no Does this operation use radioactive materials?

2b. ◯ yes ◯ no Does this operation involve radionuclides listed in the Radionuclide Threshold Table in amounts which exceed 10% of the quantity listed?

2c. ◯ yes ◯ no Is dispersible radioactive material being used in this operation?

2d. ◯ yes ◯ no Will any radioactive material/waste be transported as a result of this operation?

2e. ◯ yes ◯ no Does this operation involve any accountable sources? (Sealed Radioactive Source Accountability Table)

2f. ◯ yes ◯ no Will any of the following radionuclides be used? U-233, Np-236, Np-237, Pu-238, Pu-239, Pu-240, Pu-241, Pu-242, Am-241, Am-242m, Am-243, Cm-243, Cm-244, Cm-245, Cm-247, Cf-249, and Cf-251

2f(1). ◯ yes ◯ no If you answered yes to 2f, do any of the nuclide quantities exceed the values in the table Individual Fissionable Material Mass Limits for Exempt Facilities?

2f(2). ◯ yes ◯ no If you answered yes to 2f and no to 2f(1), will there be a mixture of one or more nuclides used that the Sum-of-the-Fractions Example Calculation exceeds 1?

3. ◯ yes ☒ no Are there any explosives (including explosive waste) handled, processed, used, or stored? ◯ not applicable

3a. ◯ yes ◯ no Does this operation involve the transportation of explosives or explosive wastes?

4. ◯ yes ◯ no Does this operation involve the use of lasers? ◯ not applicable

4a. ◯ yes ◯ no Do personnel use or have the potential to be exposed to class 3b or 4 lasers?

4b. ◯ yes ◯ no Does the operation involve Class 2 or 3a lasers?

4c. ◯ yes ◯ no Does this operation involve Class 1 lasers with embedded 3b or 4 lasers?

4d. ◯ yes ◯ no Have any of the lasers involved in this operation been built locally or have any commercially available lasers been modified?

4e. ◯ yes ◯ no Are laser dyes used in this operation?

4f. ◯ yes ◯ no Is the laser registered at BNL with the Laser Safety Officer?

4g. ◯ yes ◯ no Is the beam visible?

5. ◯ yes ⊗ no Are there any chemicals or toxic materials (including wastes) handled, generated, used, stored, or processed in this operation? ◯ not applicable

5a. ◯ yes ◯ no Are any chemicals or chemical wastes used, stored or generated in this operation either known or suspected human carcinogens? (Carcinogen Table)

5b. ◯ yes ◯ no Are any Category 1 chemicals used, stored, or generated in this operation? (Category 1 Chemical Table)

5c. ◯ yes ◯ no Are any chemicals used, stored or generated in this operation pyrophoric?

5d. ◯ yes ◯ no Does this operation include the use, storage, or generation of cyanide or hydrofluoric acid?

5e. ◯ yes ◯ no Does this operation involve the use, storage or generation of peroxide forming chemicals, shock sensitive chemicals or picric acid? (Reactive Chemicals Table)

5f. ◯ yes ◯ no Does this operation involve the use, storage or generation of toxic or highly toxic gasses? (Toxic Chemicals Table)

5g. ◯ yes ◯ no Does this operation use, generate or store flammable or combustible gases, liquids or solids?

5g(1). ◯ yes ◯ no Does this operation involve the use of hydrogen gas?

5h. ◯ yes ◯ no Does this operation use, generate, or store chemical sensitizers? (Sensitizers Table)

5i. ◯ yes ◯ no Does this operation have the potential for skin absorption of toxic chemicals/wastes?

5j. ◯ yes ◯ no Are multiple chemicals (chemicals used or mixed together) or chemical procedures used in the chemical work area?

5j(1). ◯ yes ◯ no Do you have any tasks where chemicals are mixed that will create an explosive mixture?

5j(2). ◯ yes ◯ no Does your operation involve an exothermic chemical reaction? (example: polymerization)

5j(3). ◯ yes ◯ no Does your operation involve an endothermic chemical reaction? (example: pyrolysis)

5k. ◯ yes ◯ no Will this operation involve the transportation of chemicals?

5l. ◯ yes ◯ no Does this operation involve the use, storage or generation of caustic/corrosive chemicals or wastes?

5m. ◯ yes ◯ no Does this operation use, generate, or store chemical reproductive hazards? (Reproductive Hazards Table)

5n. ◯ yes ◯ no Will this operation involve the use of cryogens such as liquid nitrogen or liquid helium?

5o. ◯ yes ◯ no Will this operation involve the use of beryllium - other than articles made of beryllium or that contain beryllium?

?

6. ◯ yes ☒ no Are there any nano-materials being handled, processed, manipulated, synthesized or stored? ◯ not applicable

6a. ◯ yes ◯ no Is the nano-material suspended in a liquid or bound in a solid matrix?

6b. ◯ yes ◯ no Is the nano-matieral in a particulate state?

6b. ◯ yes ◯ no Will any nano material be transported to other on-site facilities?

6d. ◯ yes ◯ no Will any nano material be shpped off-site or be received at BNL from off-site?

7. ⊗ yes ○ no Is any energized electrical equipment used in this operation? ○ not applicable

7a. ⊗ yes ○ no Is there any electrical equipment used in the operation with voltages less than 50 V AND current > 5 mA OR stored energy > 10 J?

7a(1). ○ yes ⊗ no Has this equipment been built locally, modified or NOT listed by a Nationally Recognized Testing Laboratory?

7b. ⊗ yes ○ no Is there any electrical equipment used in the operation with voltages > 50 V?

7b(1). ○ yes ⊗ no Has this equipment been built locally, modified or NOT listed by a Nationally Recognized Testing Laboratory?

7c. ○ yes ⊗ no Does the equipment have capacitors or inductors that can store > 10 J of energy?

7c(1). ○ yes ⊗ no Has this equipment been built locally, modified or NOT listed by a Nationally Recognized Testing Laboratory?

7d. ○ yes ⊗ no Does the electrical equipment associated with this operation need to be reviewed and approved by the Chief Electrical Engineer at C-AD ?

7e. ○ yes ⊗ no Does electrical equipment associated with this operation need to be inventoried?

7f. ○ yes ⊗ no Does your operation require the development of a Working with Electrically Energized Equipment Permit?

7g. ○ yes ⊗ no Does the equipment use batteries that can generate hydrogen when they are being charged?

7h. ○ yes ⊗ no Is there equipment energized by multiple power sources such that a specific written LOTO procedure is required?

8. ⊗ yes ○ no Are there any mechanical hazards such as motors, pulleys, machinery/shop equipment, forklifts, hoists and cranes, or sources of kinetic or potential mechanical energy, present in this operation? ○ not applicable

8a. ⊗ yes ○ no Does the operation include the use of typical shop equipment?

8b. ○ yes ⊗ no Does the operation include the use of robotics?

8c. ⊗ yes ○ no Does the operation include the use of a hoist, crane, or rigging?

8c(1). ⊗ yes ○ no Does this operation use a crane?

8c(2). ⊗ yes ○ no Does this operation use a hoist?

8c(3). ⊗ yes ○ no Does this operation include the use of rigging?

8c(3)i. ○ yes ⊗ no Is the rigging under a continuous static load?

8d. ○ yes ⊗ no Does the operation include the use of hydraulic or pneumatic lift?

8e. ○ yes ⊗ no Does the operation include the use of a forklift?

8f. ○ yes ⊗ no Does this operation involve the use of electrically powered hand tools?

8g. ○ yes ⊗ no Does this operation involve the use of pneumatically powered hand tools?

9. ◯ yes ⊗ no Do you work with any of the following non-ionizing radiation (NIR) sources: ◯ not applicable

Permanently installed Radio Frequency Micro Wave (RFMW) gear capable of radiating over 1 W into an open area at frequencies between 3 kHz and 300 GHz or of emitting over 100 W if the output is normally completely enclosed by coaxial cables, waveguides, or dummy or real loads;

Satellite and permanently installed communications transmitters (not receivers);

Portable walkie-talkie communications sets capable of radiating over 7 W at frequencies between 100 kHz and 450 MHz, and over 7 (450/f) W at frequencies between 450 MHz and 1.0 GHz (f in MHz);

Induction heaters. (Microwave ovens used as a household appliance, cellular phones, video display terminals, and radar speed Guns are exempt.);

Any equipment that would expose personnel to high levels of sub-radiofrequency electric or magnetic fields including static and DC magnetic fields;

Any equipment that would expose personnel to high levels of Visible Light and Near Infrared (400 nm-300 nm) (>1 candela /cm2), Infrared (770 nm-3000 nm) (>10 w/cm2), and/or Ultraviolet (UV) radiation (180 nm-400 nm) (see UV table for allowable limits); or

Any infrared heat lamp or any near-infrared source where a strong visual stimulus is absent (luminance of less than E-06 candela/cm2).

(Question 9 has no subquestions.)

10. ☒ yes ○ no Are there any sources of thermal hazards, other than commercially available units such as, soldering irons, hot plates, small qty. (< 0.5 gallons) of cryogenics, etc., that are less than -1 ^{o}C (30 ^{o}F) or greater than 54 ^{o}C (130 ^{o}F)? ○ not applicable

(Question 10 has no subquestions.)

11. ☒ yes ○ no Are there any pressure sources to be considered such as compressed gas cylinders, pressure vessels, hydraulic systems, vacuum systems, etc. (excluding house supplied sources) in this operation? ○ not applicable

11a. ○ yes ☒ no Are any parts of any pressure systems operating in the operation at a positive pressure greater than 15 psig (i.e., 15 psi *above* local atmospheric pressure) and having a potential stored energy greater than 100 kilojoule?

11a(1). ○ yes ☒ no Are there brittle materials utilized in this system?

11b. ○ yes ☒ no Is there a pressure system in the operation intended for both negative (i.e., vacuum) and positive pressures and capable of operating at greater than 100 kilojoule *positive* stored energy (i.e., under positive pressure) and not equipped with a pressure relief device set at 15 psig (positive) or lower?

11b(1). ○ yes ☒ no Are there brittle materials utilized in this system?

4-7 psi ABOVE ATM

11c. ○ yes ☒ no Is there a pressure system present in the operation involving cryogenic system or dewar installation equipped with a pressure relief device set above 15 psig, regardless of the estimated amount of potential stored energy?

19-21 psig INSULATION VACUUM

11c(1). ○ yes ☒ no Are there brittle materials utilized in this system?

11d. ○ yes ☒ no Is there a pressure system present in the operation involving a transportable, commercially available 160-200 L liquid nitrogen dewar with a pressure relief device set above 30 psig?

1 psi & 4 psi ABOVE ATM HELIUM DEWAR

11e. ○ yes ☒ no Are there vacuum vessels with internal spaces greater than 35 cubic feet or pressure vessels with greater than 515 psi-cubic feet?

11f. ○ yes ☒ no Will you be using an autoclave?

12. ◯ yes ☒ no Are there any sources of excessive noise (e.g., such that you have to shout at a distance of 3 feet to communicate to a coworker or louder than busy traffic) involved in this operation? ◯ not applicable

(Question 12 has no subquestions.)

13. ◯ yes ☒ no Are there any additional hazards, not mentioned above, that should be considered? Such as biological hazards, confined spaces, elevated working surfaces, firearms, welding/spark/flame, ergonomics? ◯ not applicable

13a. ◯ yes ☒ no Could a worker be exposed to any biological hazard including handling of human body fluids, human tissues, or mouse droppings?

13b. ◯ yes ☒ no Does this operation include any space that might meet the definition of a confined space?

13b(1). ◯ yes ☒ no Will personnel be required to enter confined spaces?

13c. ◯ yes ☒ no Could personnel be required to perform their duties from an elevated position (including ladders)?

13d. ◯ yes ☒ no Will personnel perform functions that involve repetitive motion, excessive force or vibration, lifting, or other ergonomic concerns?

13e. ◯ yes ☒ no Will personnel be required to perform this operation in extreme climates or temperatures?

13f. ◯ yes ☒ no Will welding or cutting or spark/flame producing operations be conducted in association with this operation?

13g. ◯ yes ☒ no Does this operation involve any human interfaces critical to safety (e.g., communicating chemical recipe information to the user of an etching solution or communicating maximum load to be used on a pressure cell).

13h. ◯ yes ☒ no Are you aware of any other hazardous conditions or potential sources of hazards that have not previously been addressed by this questionnaire that you feel deserve further consideration?

If yes, then please explain:

13i. ◯ yes ☒ no Indicate YES if you respond YES to any of the following 3 questions:

Does this work involve research and development with intended application to the nuclear fuel cycle?

Does this work involve the manufacture of possible nuclear fuel cycle dual-use material, equipment or components?

Does this activity involve the export or import of material, equipment or components that may be used in the nuclear fuel cycle?

14. ◯ yes ☒ no Does this operation involve: ◯ not applicable

the use of equipment, tools or materials outside of the design specifications or outside of the manufacturer's recommendations

14.a ◯ yes ☒ no the use of equipment or apparatus built locally?

15. ⊗ yes ○ no Will this operation be: * POSSIBLE * ○ not applicable

operated on weekends or after normal working hours (6pm to 7am) ?

operate with a sole attendant (working alone)? (2 PERSON RULE)

15.b ⊗ yes ○ no Will this operation be left unattended ?

PROPER BARRIERS WILL BE IN PLACE, IDENTIFYING CRYOGENIC HAZARDS AFTER WARM-UP >160K DEWAR COULD TAKE A FEW DAYS TO FULLY WARM-UP AND BE EMPTIED

15.c ⊗ yes ○ no Regardless of operation, will work be done outside normal working hours?

15.d ⊗ yes ○ no Will operation or work require 2-person rule?

15.e ○ yes ⊗ no Will the job or operation require special attention in the event the area is left unexpectedly for long periods of time?

16. ○ yes ⊗ no Are there any environmental concerns, such as wastes, air or wastewater discharges, or any waste generated in a Radiological Controlled Area, involved with this operation? ○ not applicable

16a. ○ yes ○ no Will this operation generate any hazardous wastes, or will personnel be required to handle hazardous waste?

16a(1). ○ yes ○ no Will any acutely hazardous (P-listed) wastes be generated, handled or used? (P-Listed Chemicals Table)

16b. ○ yes ○ no Will this operation generate any radioactive waste, or will personnel be required to handle radioactive waste?

16c. ○ yes ○ no Will this operation generate any mixed waste, or will personnel be required to handle mixed waste?

16d. ○ yes ○ no Will this operation generate any infectious or biohazardous waste, or will personnel be required to handle infectious or biohazardous waste?

16e. ○ yes ○ no Will this operation generate industrial waste?

16f. ○ yes ○ no Will this operation generate air emissions or wastewater discharge?

16g. ○ yes ○ no Will ANY waste (radioactive, hazardous, mixed, sanitary, etc.) be produced in a Radiological Controlled Area as a result of this operation?

16h. ○ yes ○ no Do you know if there is a National Environmental Protection Act (NEPA) Evaluation associated with this experiment or project?

17. ⊗ yes ○ no Are there any controls (i.e., ventilation, fume hoods, interlocks, personal protective equipment, HEPA filters/vacuum cleaners, medical monitoring) associated with this operation? (Medical Monitoring Table) ○ not applicable

17a. ○ yes ⊗ no Is any local ventilation used in this operation?

17b. ○ yes ⊗ no Are interlocks used in this operation?

17c. ⊗ yes ○ no Is any personal protective equipment used in this operation?

17c(1). ⊗ yes ○ no Are gloves used in this operation?

17d. ○ yes ⊗ no Are HEPA filters in place/used?

17d(1). ○ yes ⊗ no On ventilation systems?

17d(2). ○ yes ⊗ no HEPA vacuum cleaners?

17e. ○ yes ⊗ no Is any medical monitoring required for this operation? (Medical Monitoring Table)

17f. ○ yes ⊗ no Will respiratory protection be required for this operation?

17g. ○ yes ⊗ no Will a lockout tagout (LOTO) be used without a written procedure?

Print Form

18. ⊗ yes ○ no Do you rely on any systems that are listed below to operate hazard controls or to control any hazards for your operations? ○ not applicable

18a. ○ yes ⊗ no Access Controls or Gated Locked Enclosure

18b. ○ yes ⊗ no Building Physical Structure (including drainage)

18c. ○ yes ⊗ no Compressed Air

18d. ○ yes ⊗ no Compressed Gas

18e. ○ yes ⊗ no Chilled Water

18f. ○ yes ⊗ no De-Ionized/De-mineralized Water

18g. ○ yes ⊗ no Differential Pressure Monitors

18h. ⊗ yes ○ no Electric Power (includes Grounding)

18i. ○ yes ⊗ no Fire Protection

18j. ○ yes ⊗ no Fans or HVAC

18k. ⊗ yes ○ no Hoists and Cranes

18l. ○ yes ⊗ no Heating Water

18m. ○ yes ⊗ no Hazardous Gas Alarms/Monitors

18n. ○ yes ⊗ no Interlocks of Any Type for Any Hazard

18o. ○ yes ⊗ no Lightning Protection System

18p. ⊗ yes ○ no Liquid Nitrogen or Helium System

18q. ○ yes ⊗ no Non-potable Water

18r. ○ yes ⊗ no Oxygen Monitoring System

18s. ⊗ yes ○ no Pressure Relief Valves or Burst Disks

18t. ○ yes ⊗ no Potable Water

18u. ○ yes ⊗ no Process Cooling Water

18v. ○ yes ⊗ no Sanitary Sewer

18w. ○ yes ⊗ no Steam

18x. ○ yes ⊗ no Utility Gas (natural gas)

18y. ⊗ yes ○ no Vacuum

18z. ○ yes ⊗ no Ventilation Supply/Exhaust System of Any Type

ERL Block House Fatality Rate and ODH Class Determination

- Φ Total without Fan (F = 1) = 1.43E-3
- Φ Total for Fan (F = 1) = 1.20E-5
- Φ Total for System Fault x Fan Fault (F = 1) = 1.72E-8
- 1.72E-8 < 1E-7 therefore ODH Class 0

Block House Release with Exhaust Fan On

- From SBMS “Oxygen Concentration in Ventilated Spaces” Case B: Ventilation fan drawing from the confined volume with the ventilation rate greater than the spill rate.
- Q (ventilation Rate) = 12,000 CFM
- R (Spill Rate) = 1,344 CFM
- V (Volume) = 24,000 cubic ft

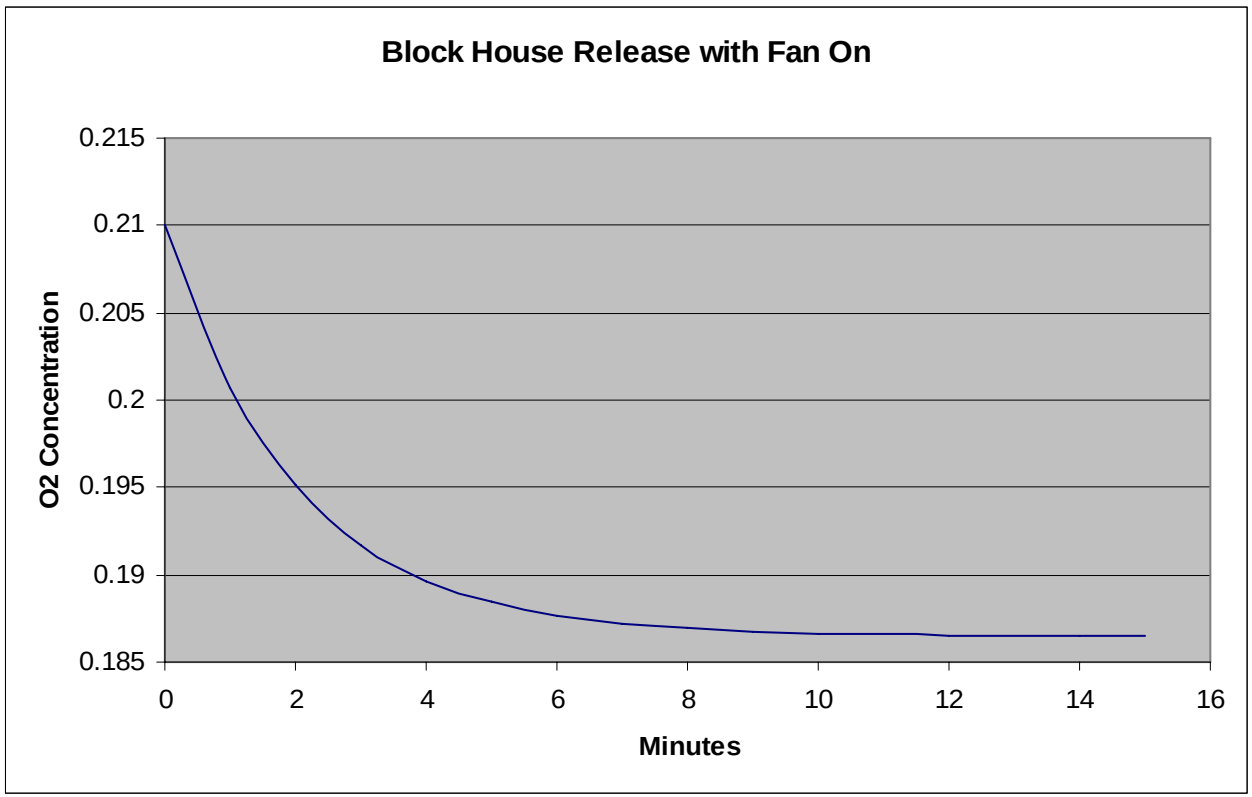

Block House % O2 For ODH Class 0 without Exhaust Fan

- Calculate PO2 for Φ = 1E-7 without exhaust fan
- Φ(ODH 0) = P(w/o fan)*F(ODH O)
- P(w/o fan) = 1.43E-3
- F(ODH 0) = 1E-7/1.43E-3 = 6.99E-5
- From SBMS: F = 10**(6.5-(PO2/10))
- PO2 = 107 mm Hg = 14.0% O2

Block House Release with Exhaust Fan Off

- From SBMS "Oxygen Concentration in Ventilated Spaces" Case C: Ventilation fan drawing from the confined volume with the ventilation rate less than or equal to the spill rate.
- Q (ventilation Rate) = 0 CFM
- R (Spill Rate) = 1,344 CFM
- V (Volume) = 24,000 cubic ft

Time	% O2
0m 00s	21.0%
1m 20s	19.5%
2m 45s	18.0%
7m 15s	14.0%

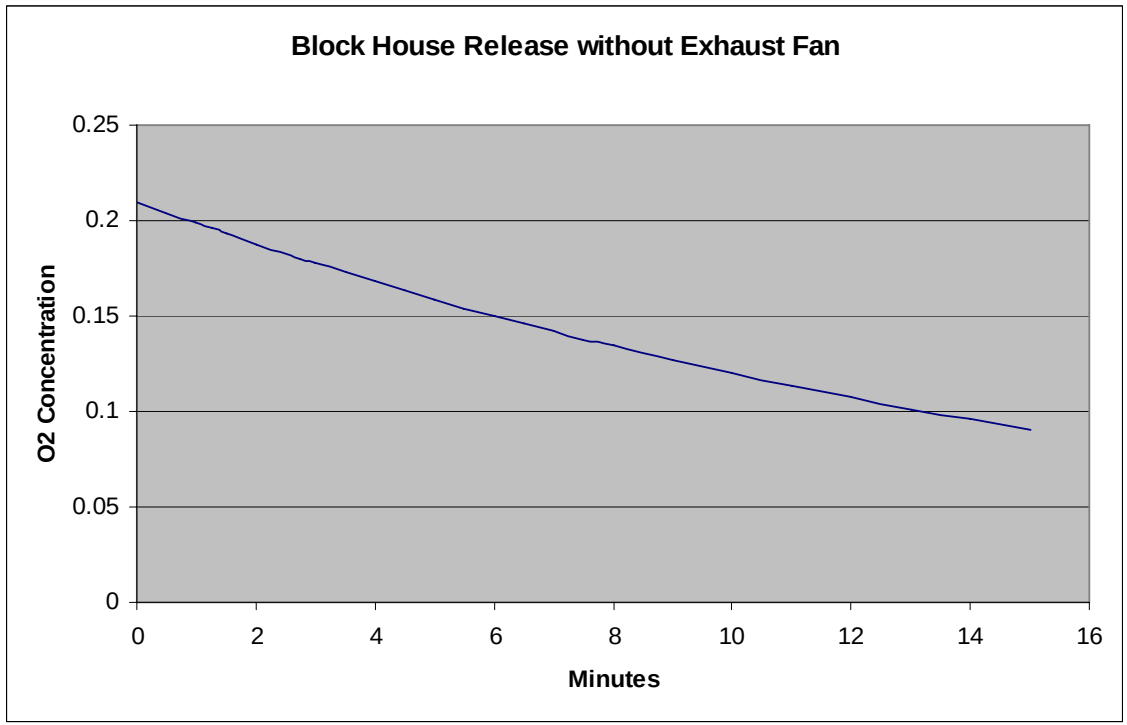

Pump Room ODH

- From SBMS “Oxygen Concentration in Ventilated Spaces” Case C: Ventilation fan drawing from the confined volume with the ventilation rate less than or equal to the spill rate.
- Q (ventilation Rate) = 0 CFM
- R (Spill Rate) = 90 CFM
- V (Volume) = 11980 cubic ft

Time	% O2
0m	21.0%
10m	19.5%
20m	18.0%
180m	5.4%

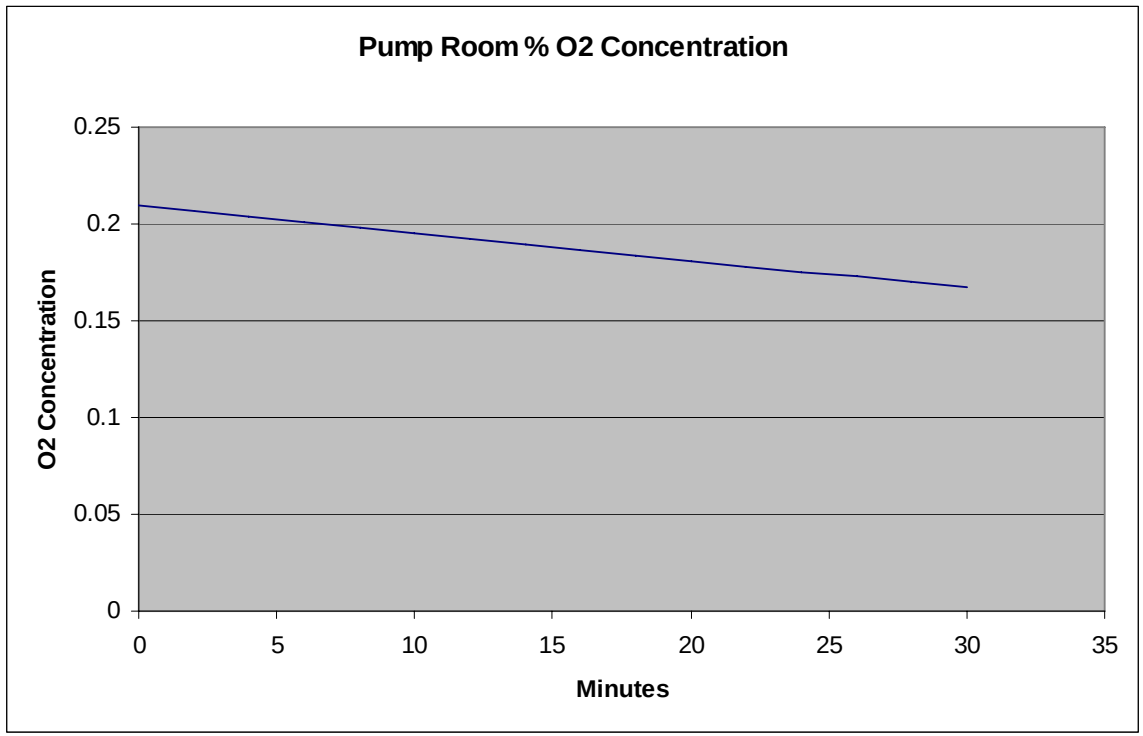

285-00100 -

REVISIONS				
ZONE	LTR		DATE	APPROVED

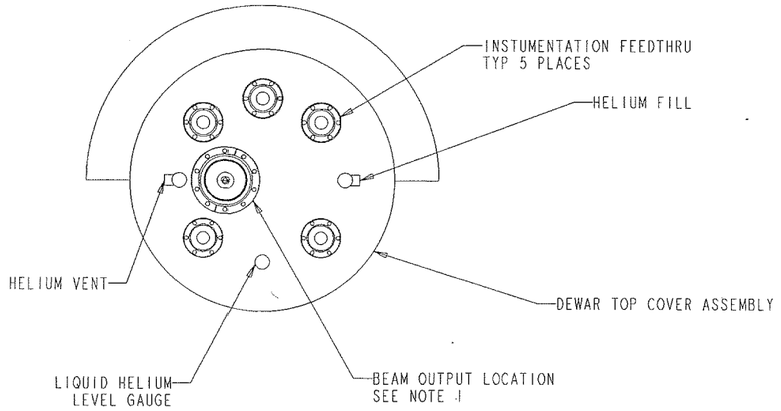

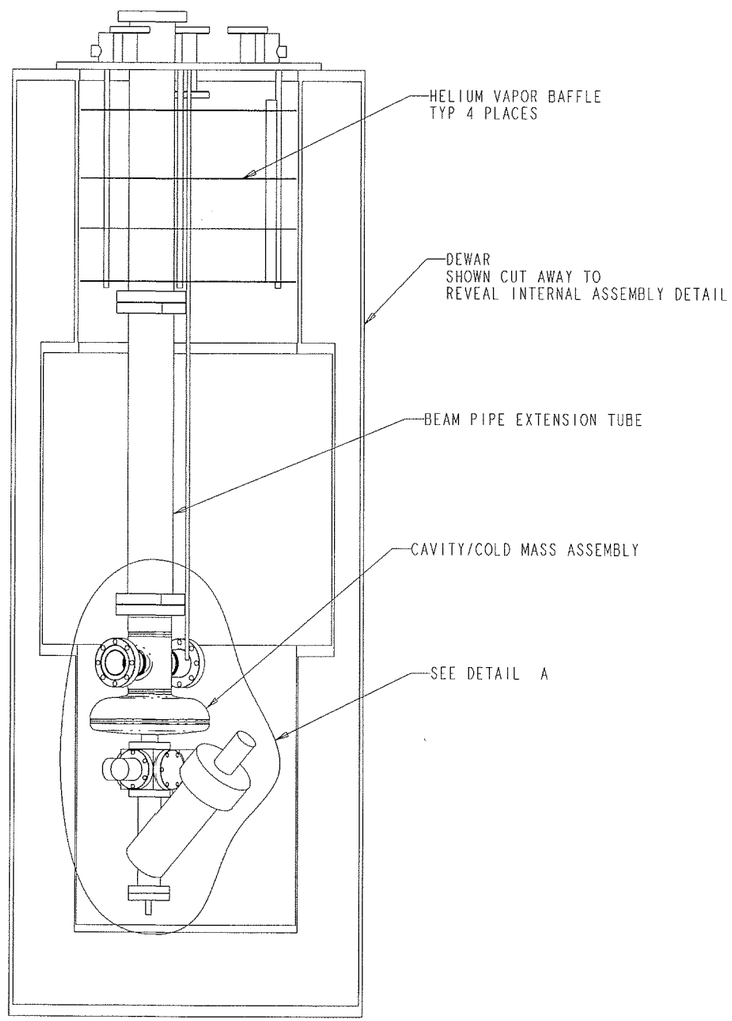

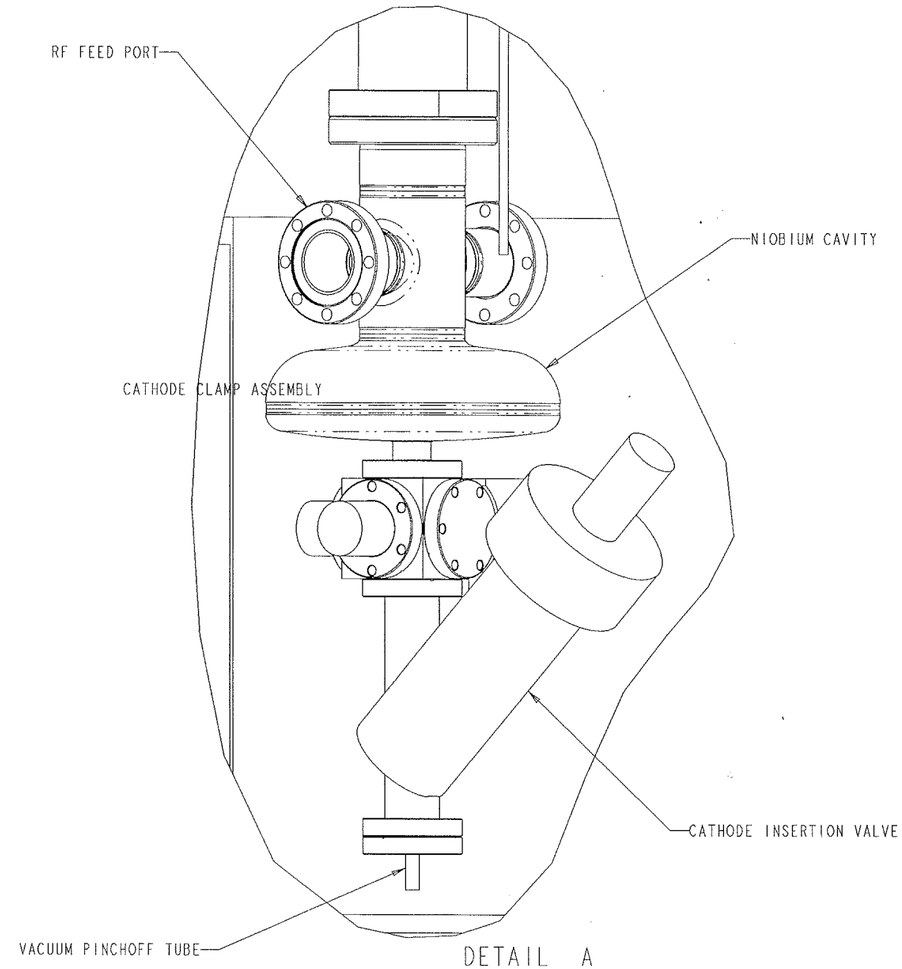

DETAIL A
SCALE 0.500

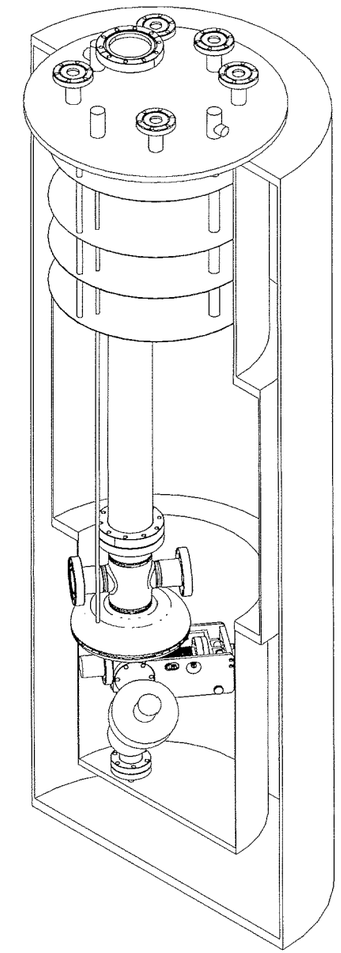

NOTES:

1.BEAM DUMP PORTION OF HERMETIC ASSEMBY NOT SHOWN - BNL TO SUPPLY

QTY PER ASSEMBLY	PART NUMBER	NOMENCLATURE	STOCK SIZE	MATERIAL	GOV'T SPEC	COMMERCIAL	NOTE

COMPUTER GENERATED DRAWING

PRELIMINARY - CHECK PRINT

PART NUMBER	NEXT ASS'Y	QTY

UNLESS OTHERWISE SPECIFIED DIMENSIONS IN INCHES
LINEAR TOL .XX ±.030 .XXX ±.005 .XXXX ±.001
ANGULAR TOL MACHINED LOCATING FORMED ±0°30' CHAMFERS ±5°
TOL ON LOFTED DELINEATIONS IS

CONTRACT NO. GC1285
DRAWN BY: D.HOLMES 3/30/07
LAYOUT BY: D. HOLMES
CHECKED BY:
STRESS:
COG ENG:
RF ENGR:
PROJ ENGR: H.BLUEM

ADVANCED ENERGY SYSTEMS INC.
MEDFORD, NEW YORK 11763

COLD MASS ASSEMBLY
POLARIZED ELECTRON GUN

FSCM No.	SIZE	DWG NO.	REV
1P3A1	D	1285-00100	-

SCALE: 1:2 & NOTED
SHEET 1 OF 1

(Talk to Roberto) DR. RANJAN GROVER
X 5968

SOP for Liquid Helium transfer into cryostat for operation and RF testing of superconducting gun

Warning: This experiment setup involves liquid Helium (temperature 2K).

Purpose: To transfer up to 250 liters of 4K liquid Helium into a cryostat for verifying its readiness following which it will be used for low power RF testing of a superconducting gun using a network analyzer.

Description: The transfer is done from two 250 liter liquid helium dewars via an insulated transfer line. The transfer will be done in Bldg. 912 where the superconducting gun is inserted into the cryostat prior to the transfer of liquid Helium for RF testing.

Required Equipment

Liquid Helium cryostat: Using an existing cryostat manufactured by International Cryogenics. The insulating vacuum is rated by the manufacturer to hold without the need for an externally connected pump. The cryostat is equipped with a burst disk in case of failure in the insulating vacuum and a relief valve if the pressure inside the vessel exceeds safe operating values. The first transfer will be done with a turbo pump connected to the insulating jacket to ensure the insulating vacuum.

Liquid Helium dewars: 2X 250 liter dewars from the BNL cryogenics facility.

Insulated transfer line: Available in Bldg. 912. Commercially purchased off the shelf item.

Flow meter: To study rate of liquid Helium transfer from dewar to the cryostat.

Temperature and pressure sensors: For monitoring the state of the helium inside the cryostat.

Pumps: One for pulling vacuum on the insulating jacket and another to pull vacuum on the Helium vessel to make 2K Helium.

NOTE: All instruments mentioned above will be verified/installed by the cryogenics group. Contact: Tom Tallerico.

CAUTION: All transfer of liquid cryogens will be done by trained personnel from the C-AD cryogenics group.

Procedure

Make sure proper PPE is used where appropriate. For liquid Helium, face shield, cryo gloves, long sleeve shirt and pants.

Cool down to 4.2 K

Pump down on the insulating jacket to reach high vacuum (10E-5 torr).

1 Insert LHe transfer line into 250 liter LHe dewar and attach it to cryostat through bayonet

connection.

2 Open fill valve to transfer LHe from 250 LHe dewar into the cryostat up to 100% while monitoring the level probe.
   - Use the available pressure regulator on the helium cylinder for pressurizing the 250 liter LHe dewar.
   - Provide the required cooldown speed by pressurizing the 250 liter LHe dewar through a pressurized Helium bottle.
   - Monitor cooldown speed using the available temperature sensor – it should be equal, or more than 10 K/min while passing down the temperature range 160K – 60K.
   - Direct the evaporated He (during the cryostat cool-down) to the Helium recovery line.

Cool down to 1.8K

When cryostat is 100% full with LHe at 4.2K close fill valve.

1 Open the appropriate valve to the connected vacuum pump.
2 Start the vacuum pump;
3 Establish 1.8K as read on the installed temperature sensor.

Warm-up

A warm-up heater will be installed on the cavity.

Start warm-up before cavity reaches 60K.

Do not allow cavity to warm-up slower than 10 K/min through the temperature range 60K – 160K, for it reduces quality factor of Nb cavity.

1 Disconnect LHe transfer line from cryostat.
2 Connect He gas cylinder to the cryostat through LHe fill-in bayonet connection.
3 Monitor warm-up speed – it should be equal, or more than 10 K/min as read on the temperature sensor while passing up temperature range 60K – 160K.
4 Provide the required warm-up speed by turning heater on and, if not enough, then by flowing warm He gas through cryostat.
5 Open regulator on cylinder to adjust He flow to provide the required warm-up speed.
6 Turn off heater when temperature is above 160K.

VACUUM VALVE
DO NOT OPEN

PROPERTY OF U.S. GOVERNMENT
131090

International Cryogenics, Inc.
Indianapolis, Indiana 46268 U.S.A.

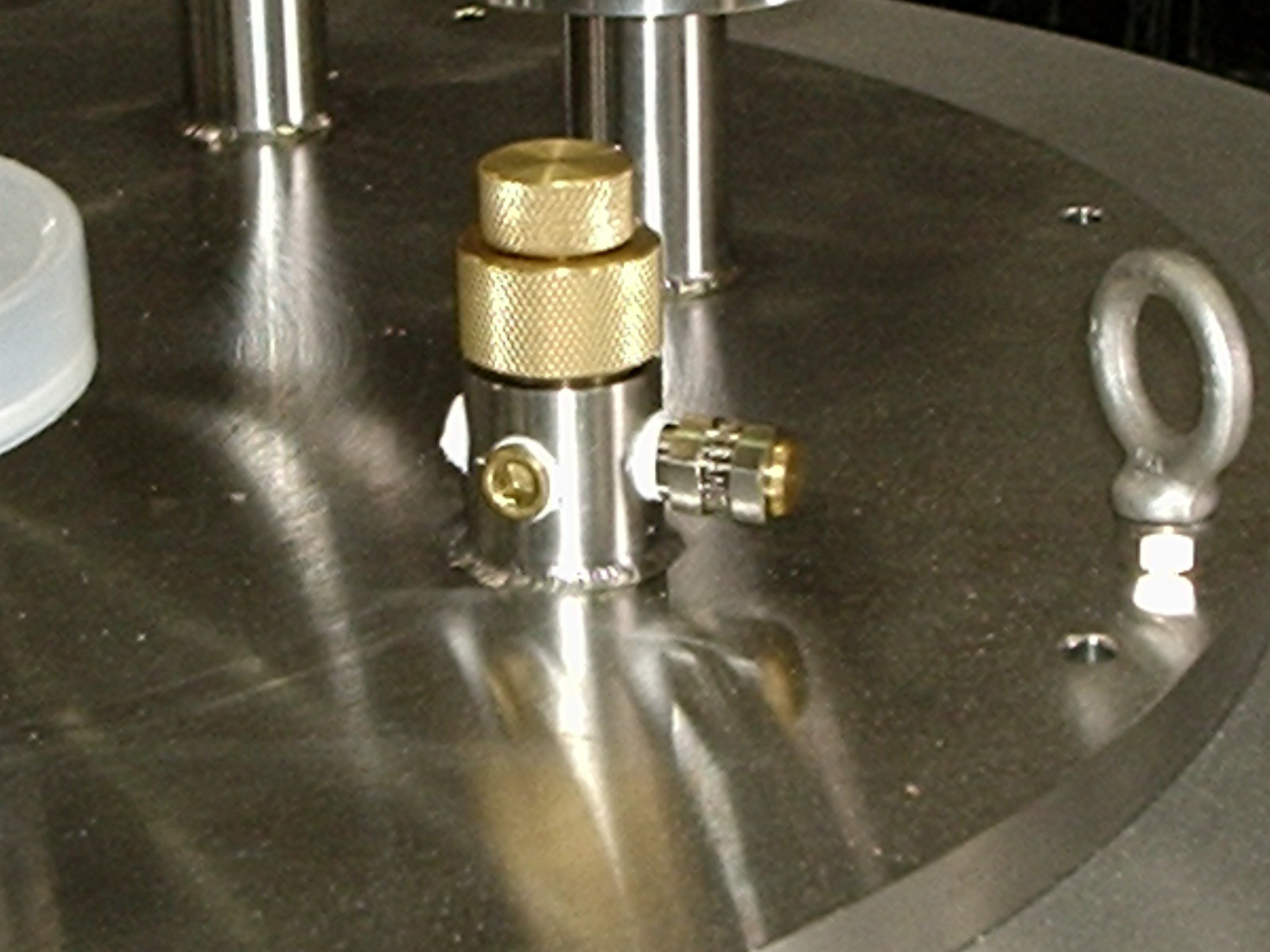

Janis
RESEARCH
COMPANY
INC
DO NOT PULL
WITH RING-
USE HANDLES
NON-MAGNETIC
Deliver to 912 ERL
Black Building

Cryostats & Dewars

Cryostats and Dewars are a collection of general purpose units for immersion cooling of samples or by contact. Included in this series is the cooling of super-conducting magnets and a variety of other uses including: X-ray and neutron diffraction, optical studies, NMR spectroscopy, XRS and others. Coming in different sizes and shapes they are available for use with nitrogen, helium, and non-nitrogen shielded helium.

Units are manufactured from light weight aluminum or from rugged stainless steel. Fiberglass, super-insulation and other low thermal conductivity items are used to minimize heat loss. Common to all units are: evacuation valves, vacuum casing burst disc, standard fill / vent fittings, heliarc welding, mass spectrometer testing to 1 x 10^{-9} cc/sec., and design of inner and outer vessels to withstand external pressures of 60 psi in collapse.

Bucket Dewars:

Available in nitrogen or non-nitrogen shielded versions. Units are constructed of heliarc welded aluminum and low thermal conductivity fiberglass to minimize conductive heat leak. Other standard features include super-insulation, evacuation valve, and vacuum casing burst disc. Foam neckplugs with relief valves and standard fill/vent fittings are available as an option. We specialize in building to the end-users requirements.

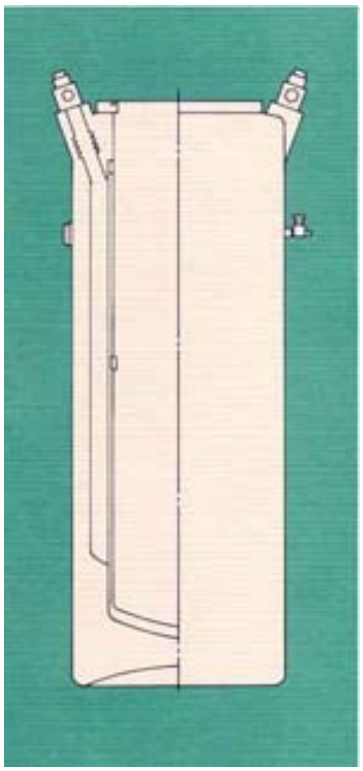

		21-6004	21-6905	21-8016	21-6906
Diameter	Inches	12	12	15	21
Height	Inches	58	48 3/4	52	67
Inside Depth	Inches	54	45 3/4	48	62
Neck ID	Inches	6 1/2	8 1/8	10	15
Helium Capacity	Liters	18	24	60	120
Nitrogen Capacity	Liters	12	16	14	25

Belly Dewars:

Derived from the "bucket" series, the Belly Dewars feature an enlarged mid-section for increased capacity and operating time. Non-nitrogen shielding is standard to reduce noise from the boiling liquid in applications such as a dilution refrigerator. Our advanced, computer optimized, thermo-shielding system provides superior thermal performance. Primarily made from aluminum with a fiberglass necktube, these units are complete with evacuation valve, burst disc and lifting lugs..

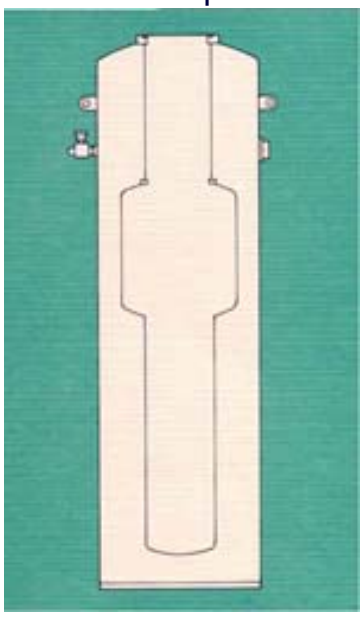

		21-4901	21-7003	21-4906
Diameter	Inches	14	18	18
Height	Inches	62	67 1/4	88
Inside Depth	Inches	58	64 1/4	82
Neck ID	Inches	5 5/8	8 1/8	10 1/4
Helium Capacity	Liters	28	56	104

Controlled Temperature Cryostats - Model #31-4000:

A liquid nitrogen shielded, liquid helium cryostat, which is principally designed for the collection of neutron diffraction data. The temperature of the sample mounting surface may be varied from 5 to 300K with temperature regulation of + or - 0.10K with the use of appropriate sensors. The sample is mounted in the vacuum space. Applications include X-ray and neutron diffraction, spectroscopy, and other optical and nuclear studies. Special tail configurations are available with or without optics.

		31-4000
Diameter	Inches	12.0
Height	Inches	37.2
Empty Weight	Pounds	32.5
Liquid Helium Capacity	Liters	12.0
Liquid Nitrogen Capacity	Liters	10.0

Controlled Temperature Cryostats -Model #31-1001:

A super-insulated, liquid nitrogen shielded, liquid helium cooled, control temperature cryostat that may use liquid nitrogen for cooling as well. Interchangeable tail configurations make this quality unit fill the need of several "simple application" units. Temperature control is similar to Model 31-4000. Applications include neutron or X-ray diffraction, thermal conductivity, infrared, and other optical studies.

		31-1001
Diameter	Inches	6.0
Height	Inches	27.0
Empty Weight	Pounds	12.5
Liquid Helium Capacity	Liters	2.2
Liquid Nitrogen Capacity	Liters	1.5

Close Window

C-A D Engineering Design Support Documentation Cover Page

Document number: xxxx-CAL-	
Title: Low Pressure Relief 1.3 GHZ SRFG Test Cryostat	**Author**: Y. R. Than
Subject:	
C-A Department Group: Cryogenic Systems Group	**Approval**:
Documentation Type **[ ] Written Technical Paper** **[x] Design Calculations** **[ ] Design Review Presentation** **[ ] Design Certification** **[ ] Specification** **[ ] Procurement Documenation** **[ ] Safety/ALARA Review Presentation** Other	**Equipment Type** **[ ] Magnets and Power Supplies** **[ ] Vacuum Systems** **[ ] RF Systems** **[x] Cryogenic Systems** **[ ] Experimental Equipment** **[ ] Beam Instrumentation** **[ ] Water Systems** **[ ] Buildings, Structures, and Shielding** Other
Equipment Location:	**Associated information for cataloging**
[ ] Tandem Van DeGraff	**[ ]** CA-D Design Room Job No.
[ ] Linac	
[ ] Booster	**[ ]** CA-D Design Room Drawing No
[ ] AGS	
[x] RHIC	**[ ]** CA-D Specification No
[ ] 912 Experimental Area	
[ ] 919 Experimental Area	**[ ]** CA-D Experiment No.
[ ] RHIC Experimental Area	
	[ ] Other
[ ] Buildings Structures, and Shielding	
Other	

BROOKHAVEN NATIONAL LABORATORY
COLLIDER-ACCELERATOR DEPARTMENT
CRYOGENIC SYSTEMS GROUP

Doc. No.: xxxxxxxx-CAL-01
Issued Date: _____
Rev. No. A_____
Rev. Date: June 6 2007

LOW PRESSURE RELIEF FOR 1.3 GHZ SCRF GUN TEST CRYOSTAT

Prepared by: _Roberto Than_____

Checked by: _Dawood Aized_____

Approved by: _____

Low Pressure Relief System

The low pressure relief is used to protect the Dewar for normal process relief and in the event of a catastrophic failure that leads to loss of vacuum to air of the insulating vacuum volume.

Load

The highest load case is for the loss of vacuum to air with an MLI insulated surface.
Heat input is 7.5 kW for a conservative heat flux value of 5 kW/m^2. [Ref.1]
The volume is assumed to be filled in the lower two cylinders volumes, the third cylinder section contain the radiation/convection baffles.

Dia	H	Area	
inch	inch	in2	m2
20	21.75	1367	0.88
14.87	19.125	893	0.58
14.87		174	0.11
		2434	1.57

Loss of vacuum to air, Heat load	
Inventory	65.7kg
Volume	0.600m^3
Area	1.57m2
Flux	5kW/m2
Duty	7.85kW

Relief Pressure

The relief pressure will be set at 16.2 psia or 1.5 psig.

Relief Flowrate and Conditions

Since the relief pressure is subcritical, vapor is generated until the relief pressure has been reached. At the relief pressure the vaporization rate is:

T	4.329K
P	1.102atm
Hfg	20090J/kg
Duty	7850W
Relief Rate	0.39kg/s

Pumpout Line size: 2 inch OD tube, 0.065 WT.

Relief valve
Relief valve shall have a minimum orifice area of 1.85 in2 or a Cv of 50.
Relief valve connection: 2 inch NPS.

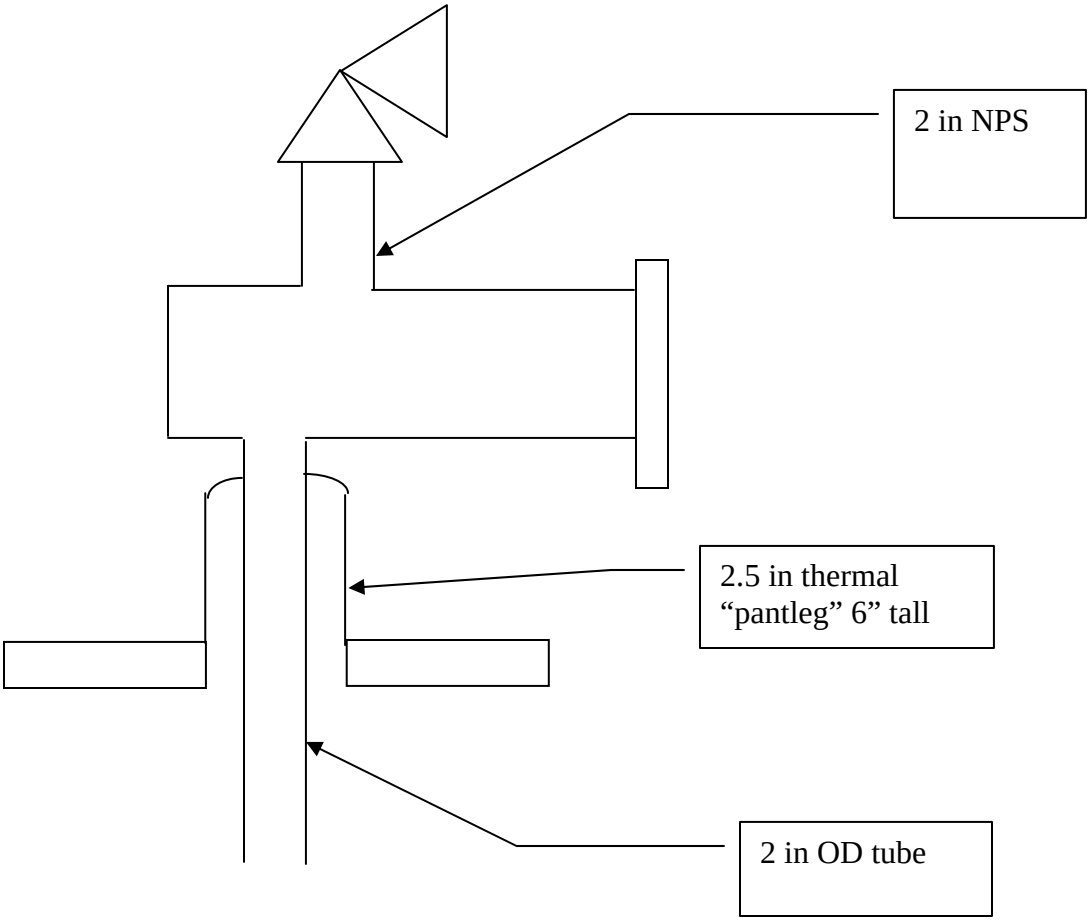

Pressure drop with warm gas in vent line

Flow	390.7g/s
Tin	4.330K
Pin	1.102069atm
Density	18.62kg/m^3
DPtotal	0.188 atm
DPtotal	0.307 psid

	ΔP atm	ΔP psid	Dia inch	L m	K	P atm	T K	f	ρ kg/m^3	Cv
2 inch Tube	0.0163	0.2395	**1.87**	**0.635**	**1**	1.102	4.33	0.0127	18.62	
4inch Pipe section	0.0008	0.0123	**1.87**	**0.152**	**0**	1.086	4.33	0.0127	18.13	
2 in NPS pipe	0.0037	0.0548	**2.26**	**0.305**	**0.5**	1.085	4.33	0.0127	18.10	
Relief	0.0600	0.8818				1.025				
6 in NPS pipe	0.0115	0.1688	**6.357**	**5.000**	**0.5**	1.025	300.00	0.0137	0.17	
Outlet						1.013				

Flow	390.7g/s
Tin	4.330K
Pin	1.102069atm
Density	18.62kg/m^3
DPtotal	0.095 atm
DPtotal	0.307 psid

	ΔP atm	ΔP psid	Dia inch	L m	K	P atm	T K	f	ρ kg/m^3	Cv
2 inch Tube	0.0163	0.2395	**1.87**	**0.635**	**1**	1.102	4.33	0.0127	18.62	
4inch Pipe section	0.0008	0.0123	**1.87**	**0.152**	**0**	1.086	4.33	0.0127	18.13	
2 in NPS pipe	0.0037	0.0548	**2.26**	**0.305**	**0.5**	1.085	4.33	0.0127	18.10	
Relief	0.0629	0.9240	**2.26**	**0.305**	**0.5**	1.081	4.33	0.0127	18.00	50
6 in NPS pipe	0.0116	0.1699	**6.357**	**5.000**	**0.5**	1.018	300.00	0.0137	0.17	
Outlet						1.007				

Relief valve cross sectional Area

$$K_d = 0.7\left(\frac{P2}{P1}\right)^{-0.265} \quad .....from...manufacturer$$

$$F = \sqrt{\frac{k}{k-1}\left[\left(\frac{P2}{P1}\right)^{2/k} - \left(\frac{P2}{P1}\right)^{k+1/k}\right]}$$

$$A = \frac{W\sqrt{T \cdot Z}}{560 \cdot K_d \cdot P1 \cdot F \cdot \sqrt{M}}$$

W: mass flow, kg/hr
M: Mol weight, 4.0026 kg/mol
T1: Inlet temperature, K
Z: Compressibility factor
F: Subsonic Flow factor
$K_{dishcharge}$: Discharge coefficient, from valve manufacturer
P1: Inlet pressure, bara
A: Area, cm^2

Subsonic Formula

Normal Density	0.179	kg/m3	0.0111	lb/ft3
Capacity (V)	7,877	Nm3/hr	77.3	SCFM
Capacity (W)	0.391	kg/s	0.86	lb/s
Relief Temp T	4.34	K	-451.9	°F
Compres factor Z	0.6666		0.6666	
γ	3.028		3.028	
Inlet Pressure P1	1.085	atm	15.94	psia
Outlet Pressure P2	1.025	atm	15.06	psia
Molecular Weight (M)	4.0026	g/gmol		
F subsonic	0.2319			
Kd subsonic	0.711			
Orifice Area SubSonic	11.98	cm2	1.858	in2
Diameter	3.906	cm	1.538	inch

References

1. Lehmann and Zahn, "Safety Aspects for LHe Cryostats and LHe Transport Containers", ICEC7, London, 1978.
2. Stephen M. Harrison, “Loss of vacuum on a super fluid helium vessel”, 17th International Conference on Magnet Technology, IEEE Transaction on Applied Superconductivity, March 2002, Vol. 12, No1.

C-A D Engineering Design Support Documentation Cover Page

Document number: 010604040-CAL-01	
Title: Low Pressure Relief 1.3 GHZ SRFG Test Cryostat	**Author**: Y. R. Than Reviewed: D. Aized
Subject:	
C-A Department Group: Cryogenic Systems Group	**Approval**: Y. Than
Documentation Type **[ ] Written Technical Paper** **[x] Design Calculations** **[ ] Design Review Presentation** **[ ] Design Certification** **[ ] Specification** **[ ] Procurement Documenation** **[ ] Safety/ALARA Review Presentation** Other	**Equipment Type** **[ ] Magnets and Power Supplies** **[ ] Vacuum Systems** **[ ] RF Systems** **[x] Cryogenic Systems** **[ ] Experimental Equipment** **[ ] Beam Instrumentation** **[ ] Water Systems** **[ ] Buildings, Structures, and Shielding** Other
Equipment Location:	**Associated information for cataloging**
[ ] Tandem Van DeGraff	**[ ]** CA-D Design Room Job No.
[ ] Linac	
[ ] Booster	**[ ]** CA-D Design Room Drawing No
[ ] AGS	
[x] RHIC	**[ ]** CA-D Specification No
[ ] 912 Experimental Area	
[ ] 919 Experimental Area	**[ ]** CA-D Experiment No.
[ ] RHIC Experimental Area	
	[ ] Other
[ ] Buildings Structures, and Shielding	
Other	

BROOKHAVEN NATIONAL LABORATORY
COLLIDER-ACCELERATOR DEPARTMENT
CRYOGENIC SYSTEMS GROUP

Doc. No.: **010604040-CAL-01**
Issued Date: _____
Rev. No. A_____
Rev. Date: June 6 2007

LOW PRESSURE RELIEF FOR 1.3 GHZ SCRF GUN TEST CRYOSTAT

Prepared by: _Roberto Than_____

Checked by: _Dawood Aized_____

Approved by: ____ Roberto Than _____

Low Pressure Relief System

The low pressure relief is used to protect the Dewar for normal process relief and in the event of a catastrophic failure that leads to loss of vacuum to air of the insulating vacuum volume.

Load

The highest load case is for the loss of vacuum to air with an MLI insulated surface.
Heat input is 7.5 kW for a conservative heat flux value of 5 kW/m^2. [Ref.1]
The volume is assumed to be filled in the lower two cylinders volumes, the third cylinder section contain the radiation/convection baffles.

Dia	H	Area	
inch	inch	in2	m2
20	21.75	1367	0.88
14.87	19.125	893	0.58
14.87		174	0.11
		2434	1.57

Loss of vacuum to air, Heat load	
Inventory	65.7kg
Volume	0.600m^3
Area	1.57m2
Flux	5kW/m2
Duty	7.85kW

Relief Pressure

The relief pressure will be set at 16.2 psia or 1.5 psig.

Relief Flowrate and Conditions

Since the relief pressure is subcritical, vapor is generated until the relief pressure has been reached. At the relief pressure the vaporization rate is:

T	4.329K
P	1.102atm
Hfg	20090J/kg
Duty	7850W
Relief Rate	0.39kg/s

Pumpout Line size: 2 inch OD tube, 0.065 WT.

Relief valve
Relief valve shall have a minimum orifice area of 1.85 in2 or a Cv of 50.
Relief valve connection: 2 inch NPS.

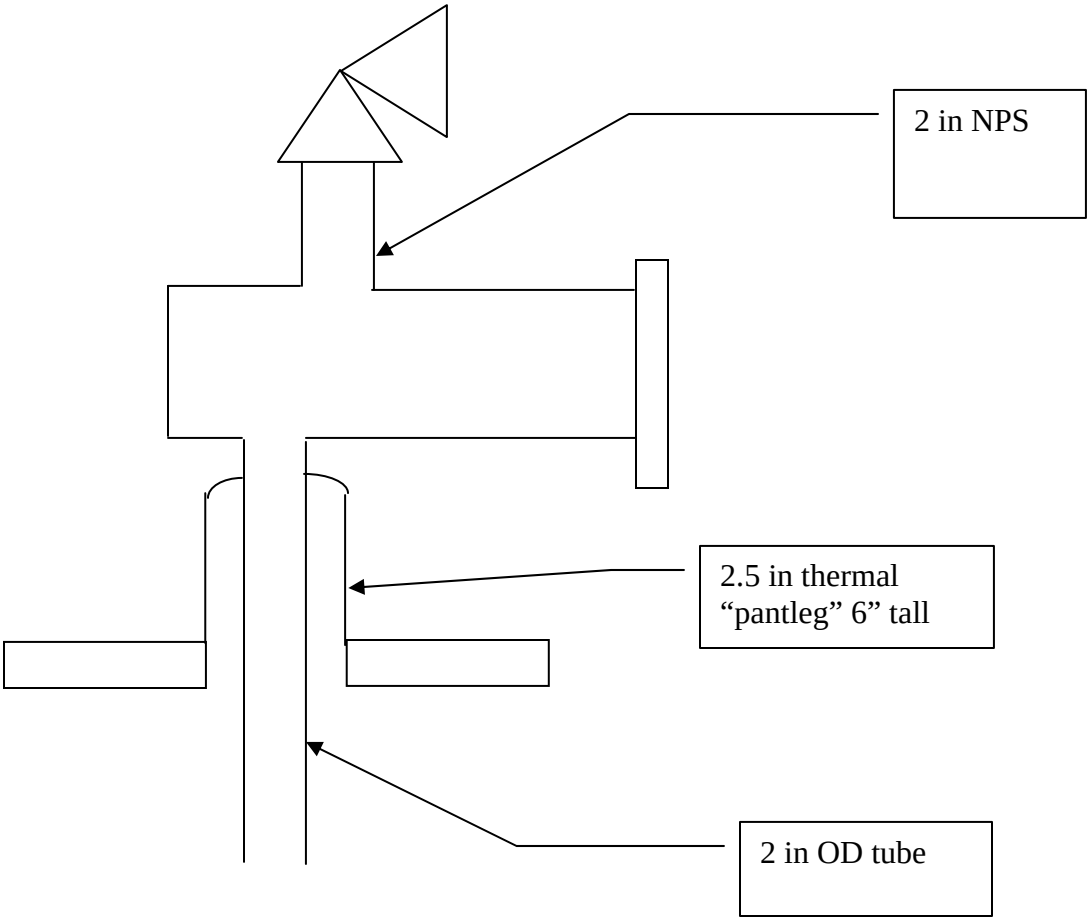

Pressure drop with warm gas in vent line

Flow	390.7g/s	
Tin	4.330K	
Pin	1.102069atm	
Density	18.62kg/m^3	
DPtotal	0.188	atm
DPtotal	0.307	psid

	ΔP atm	ΔP psid	Dia inch	L m	K	P atm	T K	f	ρ kg/m^3	Cv
2 inch Tube	0.0163	0.2395	**1.87**	**0.635**	**1**	1.102	4.33	0.0127	18.62	
4inch Pipe section	0.0008	0.0123	**1.87**	**0.152**	**0**	1.086	4.33	0.0127	18.13	
2 in NPS pipe	0.0037	0.0548	**2.26**	**0.305**	**0.5**	1.085	4.33	0.0127	18.10	
Relief	0.0600	0.8818				1.025				
6 in NPS pipe	0.0115	0.1688	**6.357**	**5.000**	**0.5**	1.025	300.00	0.0137	0.17	
Outlet						1.013				

Flow	390.7g/s	
Tin	4.330K	
Pin	1.102069atm	
Density	18.62kg/m^3	
DPtotal	0.095	atm
DPtotal	0.307	psid

	ΔP atm	ΔP psid	Dia inch	L m	K	P atm	T K	f	ρ kg/m^3	Cv
2 inch Tube	0.0163	0.2395	**1.87**	**0.635**	**1**	1.102	4.33	0.0127	18.62	
4inch Pipe section	0.0008	0.0123	**1.87**	**0.152**	**0**	1.086	4.33	0.0127	18.13	
2 in NPS pipe	0.0037	0.0548	**2.26**	**0.305**	**0.5**	1.085	4.33	0.0127	18.10	
Relief	0.0629	0.9240	**2.26**	**0.305**	**0.5**	1.081	4.33	0.0127	18.00	50
6 in NPS pipe	0.0116	0.1699	**6.357**	**5.000**	**0.5**	1.018	300.00	0.0137	0.17	
Outlet						1.007				

Relief valve cross sectional Area

$$K_d = 0.7\left(\frac{P2}{P1}\right)^{-0.265} \quad .....from...manufacturer$$

$$F = \sqrt{\frac{k}{k-1}\left[\left(\frac{P2}{P1}\right)^{2/k} - \left(\frac{P2}{P1}\right)^{k+1/k}\right]}$$

$$A = \frac{W\sqrt{T \cdot Z}}{560 \cdot K_d \cdot P1 \cdot F \cdot \sqrt{M}}$$

W: mass flow, kg/hr
M: Mol weight, 4.0026 kg/mol
T1: Inlet temperature, K
Z: Compressibility factor
F: Subsonic Flow factor
$K_{dishcharge}$: Discharge coefficient, from valve manufacturer
P1: Inlet pressure, bara
A: Area, cm^2

Subsonic Formula

Normal Density	0.179	kg/m3	0.0111	lb/ft3
Capacity (V)	7,877	Nm3/hr	77.3	SCFM
Capacity (W)	0.391	kg/s	0.86	lb/s
Relief Temp T	4.34	K	-451.9	°F
Compres factor Z	0.6666		0.6666	
γ	3.028		3.028	
Inlet Pressure P1	1.085	atm	15.94	psia
Outlet Pressure P2	1.025	atm	15.06	psia
Molecular Weight (M)	4.0026	g/gmol		
F subsonic	0.2319			
Kd subsonic	0.711			
Orifice Area SubSonic	11.98	cm2	1.858	in2
Diameter	3.906	cm	1.538	inch

References

1. Lehmann and Zahn, "Safety Aspects for LHe Cryostats and LHe Transport Containers", ICEC7, London, 1978.
2. Stephen M. Harrison, “Loss of vacuum on a super fluid helium vessel”, 17th International Conference on Magnet Technology, IEEE Transaction on Applied Superconductivity, March 2002, Vol. 12, No1.
3. Crane, Flow of Fluids through Valves, Fittings, and Pipe. Crane Co., Copyright 1969.
4. Perry, Robert H. and Green, Don W. (1984). *Perry's Chemical Engineers' Handbook*, Sixth Edition, McGraw Hill. ISBN 0-07-049479-7.
5. API Recommended Practice 520
6. Technical Bulletin TB 8102, “Rupture Disk Sizing”, Fike Corporation

C-A D Engineering Design Support Documentation Cover Page

Document number: 010604040-CAL-02	
Title: UHV Side Pressure Relief 1.3 GHZ SRF Gun	**Author**: Y. R. Than Reviewed: D. Lederle
Subject: 1.3 GHZ SRF Gun	
C-A Department Group: Cryogenic Systems Group	**Approval**: Y. R. Than
Documentation Type **[ ] Written Technical Paper** **[x] Design Calculations** **[ ] Design Review Presentation** **[ ] Design Certification** **[ ] Specification** **[ ] Procurement Documenation** **[ ] Safety/ALARA Review Presentation** Other	**Equipment Type** **[ ] Magnets and Power Supplies** **[ ] Vacuum Systems** **[ ] RF Systems** **[x] Cryogenic Systems** **[ ] Experimental Equipment** **[ ] Beam Instrumentation** **[ ] Water Systems** **[ ] Buildings, Structures, and Shielding** Other
Equipment Location:	**Associated information for cataloging**
[ ] Tandem Van DeGraff	**[ ]** CA-D Design Room Job No.
[ ] Linac	
[ ] Booster	**[ ]** CA-D Design Room Drawing No
[ ] AGS	
[x] RHIC	**[ ]** CA-D Specification No
[ ] 912 Experimental Area	
[ ] 919 Experimental Area	**[ ]** CA-D Experiment No.
[ ] RHIC Experimental Area	
	[ ] Other
[ ] Buildings Structures, and Shielding	
Other	

BROOKHAVEN NATIONAL LABORATORY
COLLIDER-ACCELERATOR DEPARTMENT
CRYOGENIC SYSTEMS GROUP

Doc. No.: 010604040-CAL-02
Issued Date: 12/15/2007__
Rev. No. A_____
Rev. Date:

UHV SIDE PRESSURE RELIEF FOR 1.3 GHZ SCRF GUN

Prepared by: _Roberto Than_____

Checked by: __D. Lederle_____

Approved by: __ Roberto Than _____

The UHV pressure relief is used to protect the volume on the UHV side of the SR Cavity.
Relief pressure: 9 psig

Cases:

1. Air leak to UHV side and accumulation of air in UHV side. Release of air during warm-up of cavity. Warmup of cavity is done using 100 W electric heater to transition through Q-disease range quickly. Total heat load is 100W plus the heat load from convection of cold air that evaporated and filled the warm section of the beam tube. Required volumetric relief rate is expansion rate due to convective heat transfer to cold air plus volumetric rate from boil-off due to 100W heater boiling the liquid air.

   A total required volumetric relief rate of 0.001 m3/s is required for a relief area of 0.02 in^2 for the cold air.

2. Leak of liquid helium from helium side into UHV side.
   The already cold cavity will pressurize and cold vapor will fill the warm portion of the beam tube that is at the top end of the assembly. Liquid helium will not reach the warm beam tube section since the liquid level is below the warm section. Expansion of the cold vapor due to free convection heat transfer from the warm beam tube walls will require relieving when the heater is turned on for warm-up. Volumetric relief rate is the boil-off of liquid helium by the heater and convection heat transfer from warm beam tube.

   A convective heat load of 1300 W is calculated plus the boil-off load of the 100W heater generated vapor flow requires a volumetric relief rate of 0.0035 m^3/s with a required relief area of 0.14 in^2 for the cold helium.

SUMMARY

Relief pressure: 9 psig

Case		Load W	Vol Rate m3/s	Massflow g/s	Required Area in^2	Relief Temperature K
1	Air	535	0.001	5	0.02	80
2	Helium	1400	0.0035	103	0.14	4.4

Burst Disk:
Available flow area: 0.3 in2.

Warm area of beam tube

Dia	3.5in	
Length	24in	
Area	264in2	0.170m2
Dia	1.5in	
Length	11in	
Area	52in2	0.033m2
Area	316in2	0.204m2

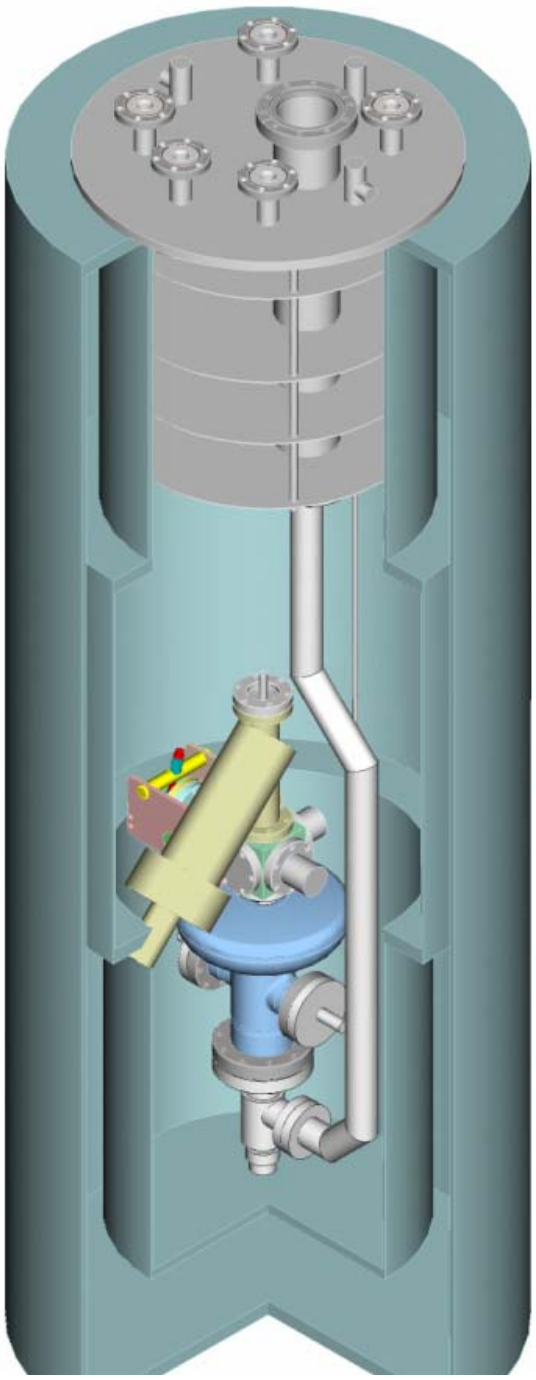

3. Case 1 Air leak to UHV side and release of air during warm-up

Required volumetric relief rate is expansion rate due to convective heat transfer to cold air plus volumetric rate from boil-off due to 100W heater boiling the liquid air.

$P_{rel} := 1 \cdot atm + 9 \cdot psi = 1.612 \cdot atm$ $\quad g_{si} := 9.81 \cdot \frac{m}{s^2}$ $\quad T_{wall} := 295 \cdot K$

$T_{air} := T_{satV.n2}(P_{rel}) = 81.607\,K$ $\quad T_{film} := \frac{(T_{wall} + T_{air})}{2}$ $\quad T_{air} := T_{air} + 0.001 \cdot K$

$\beta := \frac{expans_{n2}(P_{rel}, T_{film})}{T_{film}}$ $\quad \beta = 5.396 \times 10^{-3} \frac{1}{K}$ $\quad A_{wall} := 0.204 \cdot m^2$ $\quad Dia := 3.5 \cdot in$

$Pr := Pr_{n2}(P_{rel}, T_{film})$ $\quad Pr = 0.714$

$\mu_{film} := \mu_{n2}(P_{rel}, T_{film})$ $\quad \mu_{film} = 1.228 \times 10^{-5} \frac{kg}{m \cdot s}$ $\quad k_{film} := k_{n2}(P_{rel}, T_{film})$ $\quad k_{film} = 0.018 \cdot \frac{W}{m \cdot K}$

$\rho_{film} := \rho_{n2}(P_{rel}, T_{film})$ $\quad \rho_{film} = 2.936 \frac{kg}{m^3}$ $\quad \nu_{film} := \frac{\mu_{film}}{\rho_{film}}$ $\quad \nu_{film} = 4.183 \times 10^{-6} \frac{m^2}{s}$

$Gr := \frac{g_{si} \cdot \beta \cdot (T_{wall} - T_{air}) \cdot Dia^3}{\nu_{film}^2}$ $\quad Gr = 4.535 \times 10^8$

$Nu := 0.18 \cdot \left[\left[\frac{Pr}{(0.2 + Pr)} \cdot Gr \cdot Pr \right]^{0.29} \right]$ $\quad Nu = 49.225$

$h_{free} := Nu \cdot \frac{k_{film}}{Dia}$ $\quad h_{free} = 10 \cdot \frac{W}{m^2 \cdot K}$

$q_{air.free} := A_{wall} \cdot h_{free} \cdot (T_{wall} - T_{air}) = 435.319\,W$

$Cp_{n2} := C_{p.n2}(P_{rel}, T_{air})$ $\quad Cp_{n2} = 1.385 \times 10^3 \cdot \frac{J}{kg \cdot K}$

$\alpha_{n2} := expans_{n2}(P_{rel}, T_{air})$ $\quad \alpha_{n2} = 1.3$

$\rho_{rel} := \rho_{n2}(P_{rel}, T_{air})$ $\quad \rho_{rel} = 7.195 \frac{kg}{m^3}$ $\quad q_{air.free} = 435.319\,W$

$Volexpansionrate_{convect} := q_{air.free} \cdot \frac{1}{Cp_{n2}} \cdot \frac{\alpha_{n2}}{T_{air}} \frac{1}{\rho_{rel}}$ $\quad Volexpansionrate_{convect} = 6.959 \times 10^{-4} \frac{m^3}{s}$

$m_{convectair} := q_{air.free} \cdot \frac{1}{Cp_{n2}} \cdot \frac{\alpha_{n2}}{T_{air}}$ $\quad m_{convectair} = 5.007 \times 10^{-3} \frac{kg}{s}$

$P_{relief} := 1 \cdot atm + 9 \cdot psi = 1.612 \cdot atm$ $\quad R_u := 8.314472 \cdot \frac{joule}{mol \cdot K}$ $\quad g_c := \frac{1 \cdot kg \cdot m}{N \cdot s^2}$

$T_{air} := T_{satV.n2}(P_{relief}) = 81.607\ K$ $\quad T_{air} := T_{air} + 0.002 \cdot K$ $\quad M_{n2} = 0.028 \frac{kg}{mol}$

$Z_{n2} := Z_{n2}(P_{relief}, T_{air}) = 0.938$

$\alpha_{n2} := expans_{n2}(P_{relief}, T_{air})$

$q_{heater} := 100 \cdot W$

$\rho_{rel} := \rho_{n2}(P_{relief}, T_{air})$ $\quad h_{f.n2} := h_{PsatL.n2}(P_{relief})$ $\quad h_{g.n2} := h_{PsatV.n2}(P_{relief})$

$Latent_{n2} := h_{g.n2} - h_{f.n2}$ $\quad \gamma_{n2} := Gamma_{n2}(P_{relief}, T_{air})$

$Latent_{n2} = 1.931 \times 10^5 \cdot \frac{J}{kg}$

$m_{expansionconvect} := \frac{q_{heater}}{Latent_{n2}}$ $\quad Volrate_{boil.n2} := \frac{q_{heater}}{Latent_{n2} \cdot \rho_{rel}}$

$m_{expansionconvect} = 5.179 \times 10^{-4} \frac{kg}{s}$ $\quad Volrate_{boil.n2} = 7.199 \times 10^{-5} \frac{m^3}{s}$

$m_{expansiontotal} := m_{expansionconvect} + m_{convectair}$ $\quad m_{expansiontotal} = 5.525 \times 10^{-3} \frac{kg}{s}$

$Volexpansionratetotal := Volrate_{boil.n2} + Volexpansionrate_{convect}$

$Volexpansionratetotal = 7.679 \times 10^{-4} \frac{m^3}{s}$

$dP := P_{relief} - 14.7 \cdot psi - 1 \cdot psi$ $\quad P_1 := P_{relief}$ $\quad P_2 := P_1 - dP = 1.068 \cdot atm$ $\quad K_d := 062$

$$F_{n2} := \sqrt{\frac{2 \cdot \gamma_{n2}}{\gamma_{n2} - 1} \cdot \left[\left(\frac{P_2}{P_1}\right)^{\frac{2}{\gamma_{n2}}} - \left(\frac{P_2}{P_1}\right)^{\frac{\gamma_{n2}+1}{\gamma_{n2}}} \right]} = 0.663$$

$$A_{n2} := \frac{(Volexpansionratetotal) \cdot \rho_{rel} \cdot \sqrt{T_{air} \cdot Z_{n2}} \cdot \sqrt{R_u}}{K_d \cdot P_1 \cdot F_{n2} \cdot \sqrt{M_{n2}} \cdot \sqrt{g_c}}$$

$A_{n2} = 1.922 \times 10^{-4} \cdot in^2$ $\quad A_{n2} = 1.24 \times 10^{-3} \cdot cm^2$

Case 2 Leak of liquid helium from helium side into UHV side.

Reference:C:\mathcadfiles\Property link to excel.xmcd

$g_{si} := 9.81 \cdot \frac{m}{s^2}$ $T_{wall} := 295 \cdot K$

$P_{rel} := 1 \cdot atm + 9 \cdot psi = 1.612 \cdot atm$ $T_{rel} := T_{satV.he}(P_{rel}) = 4.77\,K$ $T_{rel} := T_{rel} + 0.001 \cdot K$

$T_{film} := \frac{(T_{wall} + T_{rel})}{2}$ $k_{film} := k_{he}(P_{rel}, T_{film})$

$\beta := \frac{expans_{he}(P_{rel}, T_{film})}{T_{film}}$ $\beta = 6.661 \times 10^{-3} \frac{1}{K}$ $A_{wall} := 0.204 \cdot m^2$ $Dia := 3.5 \cdot in$

$Pr := Pr_{he}(P_{rel}, T_{film})$ $Pr = 0.67$

$\mu_{film} := \mu_{he}(P_{rel}, T_{film})$ $\rho_{film} := \rho_{he}(P_{rel}, T_{film})$ $\nu_{film} := \frac{\mu_{film}}{\rho_{film}}$

$\nu_{film} = 2.386 \times 10^{-5} \frac{m^2}{s}$ $k_{film} = 0.097 \frac{m \cdot kg}{K \cdot s^3}$

$Gr := \frac{g_{si} \cdot \beta \cdot (T_{wall} - T_{rel}) \cdot Dia^3}{\nu_{film}^2}$ $Gr = 2.34 \times 10^7$

$Nu := 0.18 \cdot \left[\left[\frac{Pr}{(0.2 + Pr)} \cdot Gr \cdot Pr\right]^{0.29}\right]$ $Nu = 20.369$

$h_{free} := Nu \cdot \frac{k_{film}}{Dia}$ $h_{free} = 22.21 \cdot \frac{W}{m^2 \cdot K}$

$q_{free} := A_{wall} \cdot h_{free} \cdot (T_{wall} - T_{rel}) = 1.315 \times 10^3\,W$

$Cp_{he} := C_{p.he}(P_{rel}, T_{rel})$ $Cp_{he} = 1.62 \times 10^4 \cdot \frac{J}{kg \cdot K}$

$\alpha_{he} := expans_{he}(P_{rel}, T_{rel})$ $\alpha_{he} = 5.662$

$\rho_{rel} := \rho_{he}(P_{rel}, T_{rel})$ $\rho_{rel} = 29.368 \frac{kg}{m^3}$

$Volexpansionrate_{convect} := q_{free} \cdot \frac{1}{Cp_{he}} \cdot \frac{\alpha_{he}}{T_{rel}} \frac{1}{\rho_{rel}}$ $Volexpansionrate_{convect} = 3.281 \times 10^{-3} \frac{m^3}{s}$

$m_{convect} := q_{free} \cdot \frac{1}{Cp_{he}} \cdot \frac{\alpha_{he}}{T_{rel}}$ $m_{convect} = 0.096 \frac{kg}{s}$

$R_u := 8.314472 \cdot \frac{joule}{mol \cdot K}$ $q_{heater} := 100 \cdot W$ $g_c := \frac{1 \cdot kg \cdot m}{N \cdot s^2}$

$h_{fg} := h_{PsatV.he}(P_{rel}) - h_{PsatL.he}(P_{rel}) = 1.601 \times 10^4 \cdot \frac{J}{kg}$ $m_{boil} := \frac{q_{heater}}{h_{fg}} = 6.246 \times 10^{-3} \frac{kg}{s}$

$T_{rel} := T_{satV.he}(P_{rel}) = 4.77\ K$

$\rho_{boiloff} := \rho_{he}(P_{rel}, T_{rel})$ $\rho_{boiloff} = 29.403 \frac{kg}{m^3}$ $M_{he} = 4.003 \times 10^{-3} \frac{kg}{mol}$

$Vol_{boiloff} := \frac{m_{boil}}{\rho_{boiloff}}$ $Vol_{boiloff} = 2.124 \times 10^{-4} \frac{m^3}{s}$

$T_1 := T_{rel} + 0.001 \cdot K$

$dP := P_{rel} - 14.7 \cdot psi - 1 \cdot psi$ $P_1 := P_{rel}$ $P_2 := P_1 - dP = 1.068 \cdot atm$

$m_{relief} := m_{convect} + m_{boil}$ $m_{relief} = 0.103 \frac{kg}{s}$

$K_d := 0.62$ $\gamma_{sub} := \gamma_{he}(P_1, T_1) = 5.203$ $Z_v := Z_{he}(P_1, T_1) = 0.561$

$$F_{sub} := \sqrt{\frac{2 \cdot \gamma_{sub}}{\gamma_{sub} - 1} \cdot \left[\left(\frac{P_2}{P_1}\right)^{\frac{2}{\gamma_{sub}}} - \left(\frac{P_2}{P_1}\right)^{\frac{\gamma_{sub}+1}{\gamma_{sub}}} \right]} = 0.773$$

$A_{he} := \frac{m_{relief} \cdot \sqrt{T_1 \cdot Z_v} \cdot \sqrt{R_u}}{K_d \cdot P_1 \cdot F_{sub} \cdot \sqrt{M_{he}} \cdot \sqrt{g_c}}$ $A_{he} = 0.151 \cdot in^2$ $A_{he} = 0.977 \cdot cm^2$

$Volexpansionratetotal := Volexpansionrate_{convect} + Vol_{boiloff}$

$Volexpansionratetotal = 3.493 \times 10^{-3} \frac{m^3}{s}$

$A_{hetotal} := \frac{(Volexpansionratetotal) \cdot \rho_{rel} \cdot \sqrt{T_{rel} \cdot Z_v} \cdot \sqrt{R_u}}{K_d \cdot P_1 \cdot F_{sub} \cdot \sqrt{M_{he}} \cdot \sqrt{g_c}}$

$A_{hetotal} = 0.151 \cdot in^2$ $A_{hetotal} = 0.977 \cdot cm^2$

1 Burst Disk

Tube diameter: 0.625”
Area: 0.306 in2

- UHV Compatible all metal construction
- ASME UD certified
- 10CFR851 compliant
- Pressure relief range 9 to 11.5 PSIG
- Leak tight to 2 x10^{-10} std. cc/sec of Helium
- 316 Stainless steel body and disk membrane
- Bakeable to 450°C
- Compact design with no moving parts
- Calculated Flow rates

  -107 SCFM on 1.33 Flg.Assy.

  -435 SCFM on 2.75 Flg.Assy.

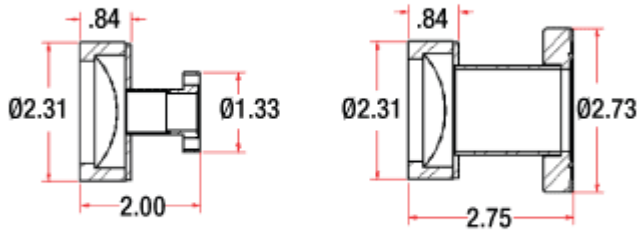

2

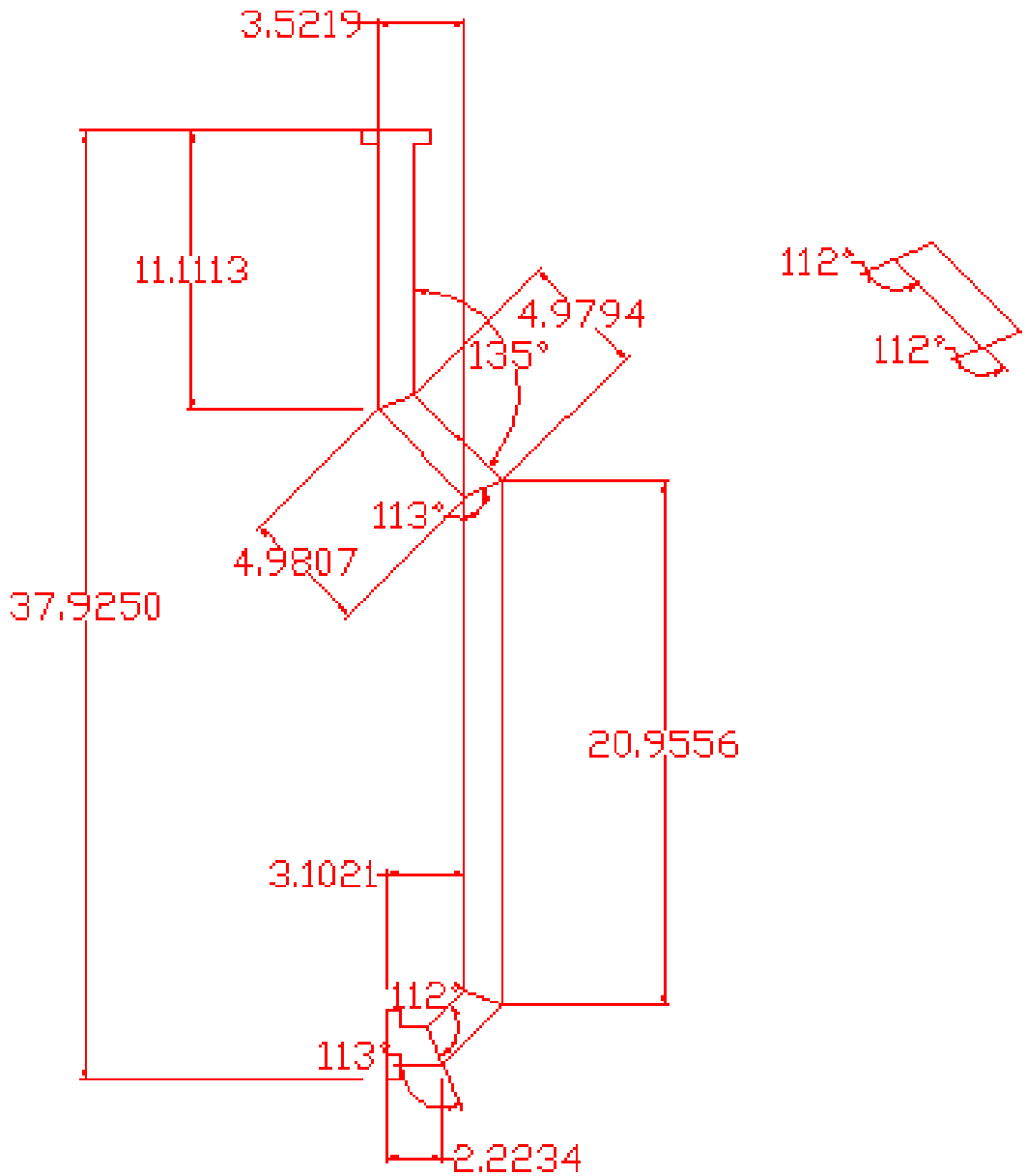
3.5219
11.1113
4.9794
135°
112°
112°
113°
4.9807
37.9250
20.9556
3.1021
112°
113°
2.2234

Appendix A: Relief free flow area

General equation any consistent units:

$$K_d = from..manufacturer.....0.62..ASME$$

$$F = \sqrt{\frac{2 \cdot k}{k-1}\left[\left(\frac{P2}{P1}\right)^{2/k} - \left(\frac{P2}{P1}\right)^{k+1/k}\right]}.....for.subsonic...flow$$

$$F = \sqrt{k\left[\left(\frac{2}{k+1}\right)^{\frac{k+1}{k-1}}\right]}.....for...choked.....flow$$

$$.A = \frac{W\sqrt{T \cdot Z} \cdot \sqrt{R_u}}{K_d \cdot P_1 \cdot F \cdot \sqrt{M} \cdot \sqrt{g_c}}$$

W: mass flow
M: Mol weight
T1: Inlet temperature
Z: Compressibility factor
F: Subsonic Flow factor or the symbol C is used also
K_d, $K_{dishcharge}$: Discharge coefficient, from manufacturer; ASME permits K_d =0.62.
P1: Inlet pressure
A: Area
g_c: Conversion constant: 1 kg-m/N-s^2
R_u: Universal Gas Constant: 8.314472 J/mol-K

$$.W = \frac{A \cdot K_d \cdot P_1 \cdot F \cdot \sqrt{M} \cdot \sqrt{g_c}}{\sqrt{T \cdot Z} \cdot \sqrt{R_u}}.....massflow$$

$$\dot{V} = \frac{A \cdot K_d \cdot P_1 \cdot F \cdot \sqrt{M} \cdot \sqrt{g_c}}{\rho \cdot \sqrt{T \cdot Z} \cdot \sqrt{R_u}}.....volumeflow$$

$$A = \frac{\dot{V} \cdot \rho \cdot \sqrt{T \cdot Z} \cdot \sqrt{R_u}}{K_d \cdot P_1 \cdot F \cdot \sqrt{M} \cdot \sqrt{g_c}}.....Area..required.....from..volume..flow$$

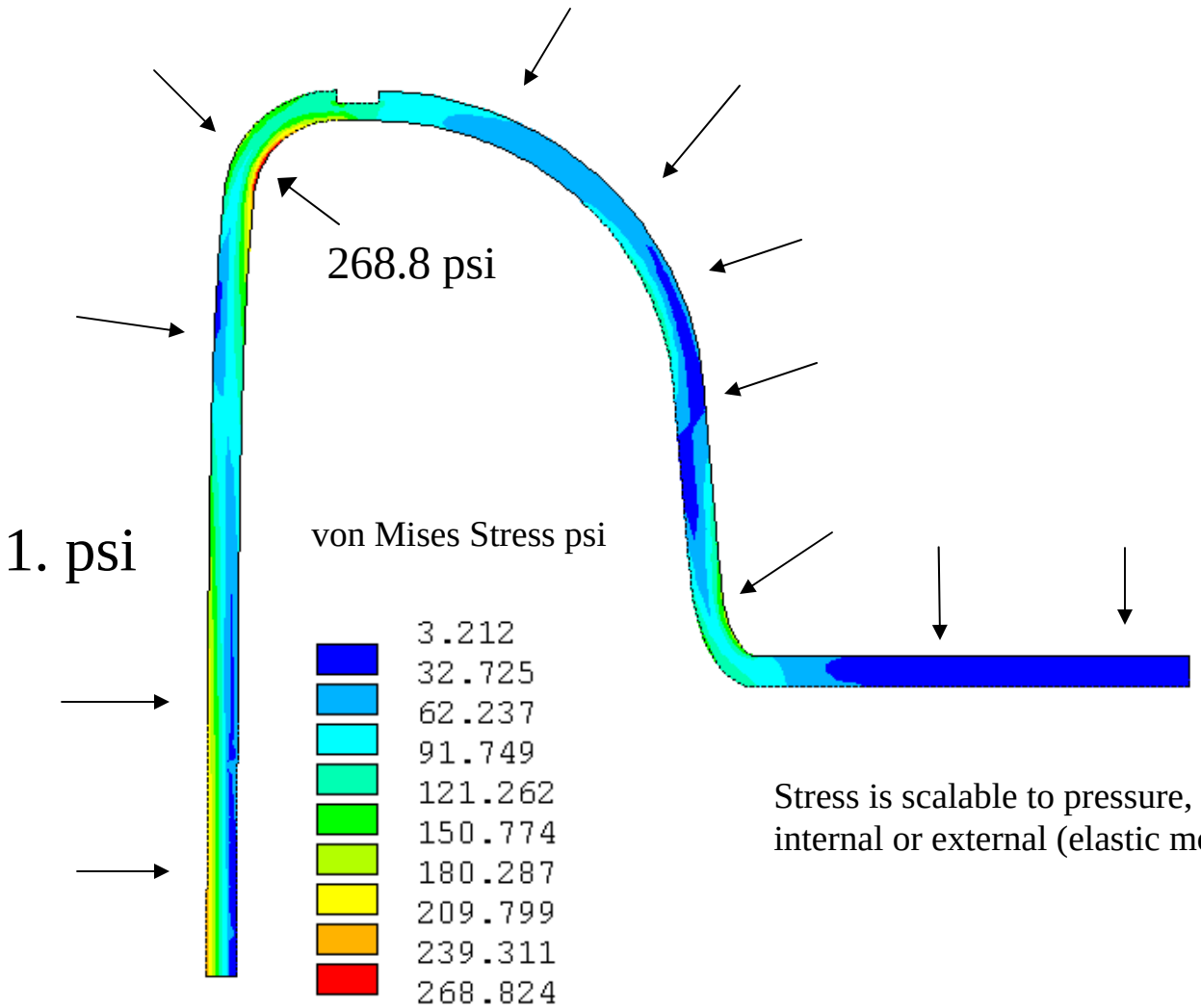

Stress is scalable to pressure,
internal or external (elastic model)

Niobium wall thickness is 3.5 mm

NOTES:

REVISION APPROVALS								
REV	ECN NO.	DESCRIPTION	DATE	BY	CHK	DES	ENG	SUPV
A	–	INITIAL RELEASE	–	–	–	–	–	–

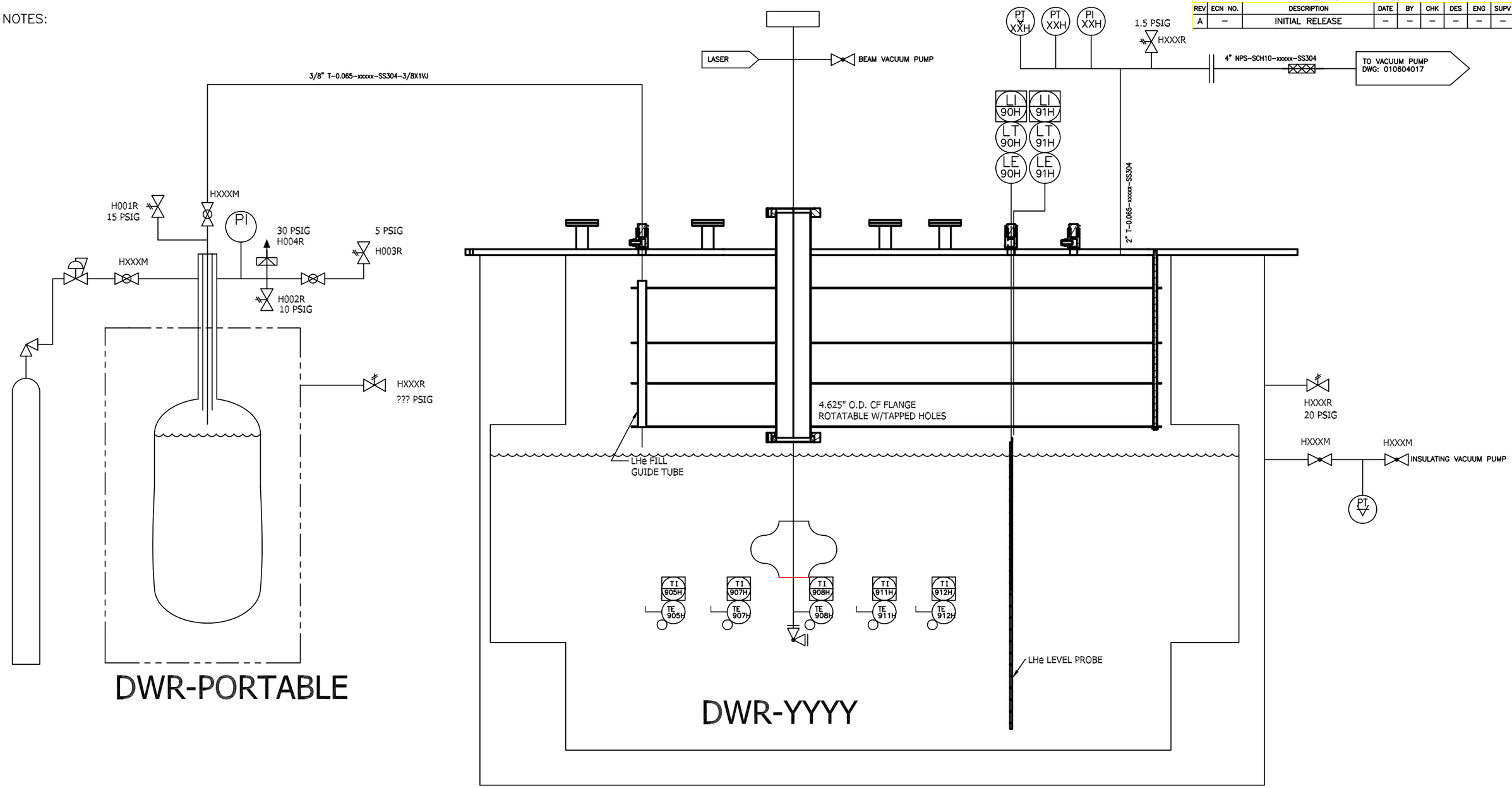

DWR-PORTABLE
250 LITER LIQUID
HELIUM DEWAR
MAWP: 30 PSIG
MDMT:-452F
DELIVERED FROM GAS
DISTRIBUTOR

DWR-YYYY
CRYOSTAT
INNER VESSEL: DESIGN: 60 PSIG MDMT:-452F
OUTER VESSEL: DESIGN 60 PSIG MDMT: 20F
INTERNATIONAL CRYOGENICS PART #21-10140

USED ON DRAWING NO.	QTY. PER ASS'Y.
APPLICATION	

OUTSTANDING ECN

INTERPRET IN GENERAL ACCORDANCE WITH ASME Y14.24M-1989

UNLESS OTHERWISE SPECIFIED

DIMENSIONS ARE IN INCHES
DECIMAL TOLERANCES
.X ± .030
.XX ± .015
.XXX ± .005
ANGULAR TOLERANCE ± 1°

125 FINISH

BREAK SHARP EDGES MAX. .03 MIN. .015

RHIC

DRAWN BY	R.THAN
CHECKED BY	
DESIGN APPROVAL	
ENGINEER APPROVAL	
SUPERVISOR APPROVAL	

COLLIDER–ACCELERATOR DEPARTMENT
BROOKHAVEN NATIONAL LABORATORY
UPTON, N.Y. 11973

TITLE:
ERL
LOW PRESSURE CRYOSTAT
P & I D 1.3 GHz GUN

SIZE D | DRAWING NUMBER: | REV. P2

Q.A. CATEGORY A-3 | SCALE: NA | WEIGHT: NA | SHEET 1 OF 1

DWG NO | SHT 1 OF 1 | REV P2

AUTOCAD

David's email updates the status of open action items. Attachment SOP_liqHe.pdf fulfills item 1.8.6 and attachment P72000006.JPG fulfills item 1.8.11.

Cheryl

-----Original Message-----
From: Pate, David J
Sent: Friday, July 20, 2007 12:13 PM
To: Conrad, Cheryl S
Cc: Pate, David J; Grover, Ranjan; Burrill, Andrew; Kewisch, Jorg
Subject: RE: Update Status of Action Items - LESHC 07-13 Review of ERL Cryostat with 1.3 GHz SCRF Gun

Cheryl

Item 1.8.1 will be addressed under good and safe work practices. During the required final walk through prior to operations the position of the relief valves will be reviewed

Item 1.8.4 the BNL web req # is 112246 dated 8/07/06 can be viewed in Peoplesoft. It is an off the shelf item part # 23-10140 by International Cryogenics (Complete)

Item 1.8.6 See attached revised SOP (Complete) – SOP_liqHe.pdf

Item 1.8.7 Gas flow diagram for He gas (Roberto Than) (Open Item) (Complete as of 9/26/07)

Item 1.8.9 Leather safety shoes listed in SOP as required PPE (Complete)

Item 1.8.10 Grounding of heater will take place during installation, heater is on order (Tom Tallerico)

Item 1.8.11 Anchoring and grounding of cryo-vessel, see attached photo of anchored cryo-vessel, grounding will be completed when cryo-vessel is in final location (P72000006.JPG)

Item 1.8.12 Working with Ray Karol, CAD requires that a Work Permit also be generated prior to LESHC walkthrough and approval for operations

David

> -----Original Message-----
> **From:** Conrad, Cheryl S
> **Sent:** Thursday, July 19, 2007 2:04 PM
> **To:** Pate, David J
> **Cc:** Lessard, Edward T; Travis, Richard J; Conrad, Cheryl S
> **Subject:** Update Status of Action Items - LESHC 07-13 Review of ERL Cryostat with 1.3 GHz SCRF Gun
>
> David,

Attached is a status version of the minutes indicating the open action items.
For each of the open action items, please indicate its status, the responsible individual, and a completion date.

Thank you,
Cheryl
LESHC Secretary

SOP for Liquid Helium transfer into cryostat for operation and RF testing of superconducting gun

Warning: This experiment setup involves liquid Helium (temperature 2K).

Purpose: To transfer up to 250 liters of 4K liquid Helium into a cryostat for verifying its readiness following which it will be used for low power RF testing of a superconducting gun using a network analyzer.

Description: The transfer is done from two 250 liter liquid helium dewars via an insulated transfer line. The transfer will be done in Bldg. 912 where the superconducting gun is inserted into the cryostat prior to the transfer of liquid Helium for RF testing. The filling of the 105 liter dewar with He from a 250L He dewar will take place over only one shift and last approximately 1 day. The first test involves just cooling down the vessel to 4K and measuring static loads, lasting approximately 8 hrs or as long as liquid He is present.

Warning: If operations continue after hours, collection of data only is allowed. There shall not be any handling of LHe. The area shall require posting of emergency numbers: x2222 Site Emergency, x4662 Main Control Room, x3868/x2024 CAS Support.

Required Equipment

Liquid Helium cryostat: Using an existing cryostat manufactured by International Cryogenics. The insulating vacuum is rated by the manufacturer to hold without the need for an externally connected pump. The cryostat is equipped with a burst disk in case of failure in the insulating vacuum and a relief valve if the pressure inside the vessel exceeds safe operating values. The first transfer will be done with a turbo pump connected to the insulating jacket to ensure the insulating vacuum.

Liquid Helium dewars: 2X 250 liter dewars from the BNL cryogenics facility.

Insulated transfer line: Available in Bldg. 912. Commercially purchased off the shelf item.

Flow meter: To study rate of liquid Helium transfer from dewar to the cryostat.

Temperature and pressure sensors: For monitoring the state of the helium inside the cryostat.

Pumps: One for pulling vacuum on the insulating jacket and another to pull vacuum on the Helium vessel to make 2K Helium.

NOTE: All instruments mentioned above will be verified/installed by the cryogenics group. Contact: Tom Tallerico.

CAUTION: All transfer of liquid cryogens will be done by trained personnel from the C-AD cryogenics group.

Procedure

Make sure proper PPE is used where appropriate. For liquid Helium, face shield, cryo gloves, long sleeve shirt, pants and leather safety shoes.

Cool down to 4.2 K

Pump down on the insulating jacket to reach high vacuum (10E-5 torr).

1. Insert LHe transfer line into 250 liter LHe dewar and attach it to cryostat through bayonet connection.
2. Open fill valve to transfer LHe from 250 LHe dewar into the cryostat up to 100% while monitoring the level probe.
    - Use the available pressure regulator on the helium cylinder for pressurizing the 250 liter LHe dewar.
    - Provide the required cooldown speed by pressurizing the 250 liter LHe dewar through a pressurized Helium bottle.
    - Monitor cooldown speed using the available temperature sensor – it should be equal, or more than 10 K/min while passing down the temperature range 160K – 60K.
    - Direct the evaporated He (during the cryostat cool-down) to the Helium recovery line.

Cool down to 1.8K

When cryostat is 100% full with LHe at 4.2K close fill valve.

1. Open the appropriate valve to the connected vacuum pump.
2. Start the vacuum pump;
3. Establish 1.8K as read on the installed temperature sensor.

Warm-up

A warm-up heater will be installed on the cavity.

Start warm-up before cavity reaches 60K.

Do not allow cavity to warm-up slower than 10 K/min through the temperature range 60K – 160K, for it reduces quality factor of Nb cavity.

1. Disconnect LHe transfer line from cryostat.
2. Connect He gas cylinder to the cryostat through LHe fill-in bayonet connection.
3. Monitor warm-up speed – it should be equal, or more than 10 K/min as read on the temperature sensor while passing up temperature range 60K – 160K.
4. Provide the required warm-up speed by turning heater on and, if not enough, then by flowing warm He gas through cryostat.
5. Open regulator on cylinder to adjust He flow to provide the required warm-up speed.
6. Turn off heater when temperature is above 160K.

CRYOFAB

SOP for Liquid Helium transfer into cryostat for operation and RF testing of superconducting gun

Warning: This experiment setup involves liquid Helium (temperature 2K).

Purpose: To transfer up to 250 liters of 4K liquid Helium into a cryostat for verifying its readiness following which it will be used for low power RF testing of a superconducting gun using a network analyzer.

Description: The transfer is done from two 250 liter liquid helium dewars via an insulated transfer line. The transfer will be done in Bldg. 912 where the superconducting gun is inserted into the cryostat prior to the transfer of liquid Helium for RF testing. The filling of the 105 liter cryo-vessel with He from a 250L He dewar will take place over only one shift and last approximately 1 day. The first test involves just cooling down the vessel to 4K and measuring static loads, lasting approximately 8 hrs or as long as liquid He is present.

Warning: If operations continue after hours, collection of data only is allowed. There shall not be any handling of LHe. The area shall require posting of emergency numbers: x2222 Site Emergency, x4662 Main Control Room, x3868/x2024 CAS Support.

Required Equipment

Liquid Helium cryostat: Using an existing cryostat manufactured by International Cryogenics. The insulating vacuum is rated by the manufacturer to hold without the need for an externally connected pump. The cryostat is equipped with a burst disk in case of failure in the insulating vacuum and a relief valve if the pressure inside the vessel exceeds safe operating values. The first transfer will be done with a turbo pump connected to the insulating jacket to ensure the insulating vacuum.

Liquid Helium dewars: 2X 250 liter dewars from the BNL cryogenics facility.

Insulated transfer line: Available in Bldg. 912. Commercially purchased off the shelf item.

Flow meter: To study rate of liquid Helium transfer from dewar to the cryostat.

Temperature and pressure sensors: For monitoring the state of the helium inside the cryostat.

Pumps: One for pulling vacuum on the insulating jacket and another to pull vacuum on the Helium vessel to make 2K Helium.

NOTE: All instruments mentioned above will be verified/installed by the cryogenics group. Contact: Tom Tallerico.

CAUTION: All transfer of liquid cryogens will be done by trained personnel from the C-AD cryogenics group.

Procedure

Make sure proper PPE is used where appropriate. For liquid Helium, face shield, goggles, cryo gloves, long sleeve shirt, pants no cuffs, leather safety shoes and lab coat or apron.

Cool down to 4.2 K

Pump down on the insulating jacket to reach high vacuum (10E-5 torr).

1. Insert LHe transfer line into 250 liter LHe dewar and attach it to cryostat through bayonet connection.
2. Open fill valve to transfer LHe from 250 LHe dewar into the cryostat up to 100% while monitoring the level probe.
    - Use the available pressure regulator on the helium cylinder for pressurizing the 250 liter LHe dewar.
    - Provide the required cooldown speed by pressurizing the 250 liter LHe dewar through a pressurized Helium bottle.
    - Monitor cooldown speed using the available temperature sensor – it should be equal, or more than 10 K/min while passing down the temperature range 160K – 60K.
    - Direct the evaporated He (during the cryostat cool-down) to the Helium recovery line.

Cool down to 1.8K

When cryostat is 100% full with LHe at 4.2K close fill valve.

1. Open the appropriate valve to the connected vacuum pump.
2. Start the vacuum pump;
3. Establish 1.8K as read on the installed temperature sensor.

Warm-up

A warm-up heater will be installed on the cavity.

Start warm-up before cavity reaches 60K.

Do not allow cavity to warm-up slower than 10 K/min through the temperature range 60K – 160K, for it reduces quality factor of Nb cavity.

1. Disconnect LHe transfer line from cryostat.
2. Connect He gas cylinder to the cryostat through LHe fill-in bayonet connection.
3. Monitor warm-up speed – it should be equal, or more than 10 K/min as read on the temperature sensor while passing up temperature range 60K – 160K.
4. Provide the required warm-up speed by turning heater on and, if not enough, then by flowing warm He gas through cryostat.
5. Open regulator on cylinder to adjust He flow to provide the required warm-up speed.
6. Turn off heater when temperature is above 160K.

Laboratory Environment Safety and Health Committee
Pressure and Cryogenic Safety Subcommittee

MINUTES OF MEETING 07-18

July 20, 2007

FINAL

Committee Members Present	Committee Members Absent
R. Alforque	D. Beavis
C. Conrad* (Secretary)	P. Mortazavi
S. Kane	M. Rehak
R. Karol	R. Travis* (Alternate Secretary)
E. Lessard (Chairperson)	K. C. Wu
J. Tuozzolo	
(* non-voting)	

Visitors
J. Fite
A. Hershcovitch
G. McInytre

Agenda:
1. Review of ERL Beam Dump – Informational Meeting

Minutes of Meeting: Appended on pages 2 through 5.

ESH COMMITTEE MINUTES APPROVED:

Signature on File	8/3/07	Signature on File	8/6/07
E. Lessard	Date	M. Bebon	Date
LESHC Chairperson		Acting ES&H ALD	

Chairperson E. Lessard called the meeting of the Laboratory Environment Safety and Health Committee (LESHC) Pressure and Cryogenic Safety Subcommittee to order on July 20, 2007 at 1:00 p.m. This meeting was an informational meeting to review the ERL beam dump and pressure issues associated with the beam dump.

1. **ERL Beam Dump:**
   1.1. A. Hershcovitch (PM) and J. Fite, both of the Collider-Accelerator Department (C-AD), made the following points during the course of the presentation and in response to specific Committee questions.[1]
      1.1.1. The ERL accelerates bunches of electrons like a normal accelerator, but then the bunches come back 180° out of phase which slows the electrons down and reduces the energy deposited in the dump. The beam (with energies between 2-5 MeV) will go through a bending magnet and have two solenoids which will spread the beam as it enters the beam dump.
         1.1.1.1. The beam dump, basically a steady-state device, will absorb 1 MW of power with very fast oscillations and many short pulses with extremely short intervals between them.
         1.1.1.2. The beam dump will be comprised of an outer stainless steel cylindrical shell (containment) surrounding a copper collector with grooves. Water pumped into a stainless steel water jacket (a tube with 2 flanges and O-ring seals) will flow through these grooves.
         1.1.1.3. The beam will be interlocked to beam dump water temperature, water flow, operation of beam spreading magnets, and vacuum. Any indication of possibly exceeding set values will immediately turn off the electron beam.
         1.1.1.4. Relief valves and/or pressure discs will engage when water pressure reaches 110 psi (under normal operation, water pressure in the beam dump system will be 70 psi).
         1.1.1.5. The beam dump will only operate if the entire accelerator concrete enclosure for the ERL is unoccupied; thereby preventing the possibility for personnel injury if the pressure relief valves do not work and electron beam energy continues to be dumped.
            1.1.1.5.1. In addition, because the beam dump is the major producer of radiation, it will be enclosed by lead blocks.
         1.1.1.6. The ERL will run at full power for a short amount of time. When the ERL experiment is over, the beam dump will be used as a RHIC beam dump where the parameters are lower and therefore less stressful.
         1.1.1.7. The beam dump is off-the-shelf (VKP-7952C) and the design to be used at BNL is the same design that was manufactured by Communications and Power Industries (CPI) for CEA Saclay (France). CPI will hydrostatically pressure test the beam dump to 200 psi, but BNL will run it at 70 psi.
      1.1.2. J. Fite was asked to look at the CPI design from the perspective of pressure concerns and areas of weakness. He first wanted to compare the results for a simple part of the beam dump using the Roark and Young book (which has been used by

[1] Dr. Hershcovitch's presentation and these Minutes are posted on the LESHC website: http://www.rhichome.bnl.gov/AGS/Accel/SND/laboratory_environment,_safety_and_health_committee.htm.)

engineers for many years) and the ANSYS computer code (a finite element analysis tool).

1.1.2.1. He analyzed an end plate, an annular disc that has a hole in the center, with specific end conditions. The assumption was made that even though the end plate is welded to a water pipe, there is going to be some expansion. It won't twist because the pipes are attached, but it may go in and out, elongate, or contract the whole device slightly, depending on pressure and temperature. Looking at 70 psi which will be the beam dump operating pressure and 200 psi which is the hydrostatic testing pressure, the results correlate very closely: deflections of .00348 and –.0099 for ANSYS and .004 and –.01 for Roark and Young.

1.1.2.2. The material property called "ultimate stress" is where the material will break apart. Below "ultimate stress" is "yield stress" where the material starts to bend, but does not break. ASME dictates a point below "yield stress" called "Allowable stress" (roughly one-half the "yield" value).

1.1.2.3. The design for the beam dump will have flanges, and calculations at 200 psi were done using various thicknesses of material for the flanges and different methods of attaching. The ANSYS model indicates varying degrees of stress by different colors—yellow indicating low stress, red indicating medium stress, and turquoise indicating the highest stress.

1.1.2.3.1. For a stainless steel welded thin flange, the yield point is 30,000 psi (purple color), but ASME states it has to be 17,000-18,000 psi (red color). The ANSYS analysis shows large areas of yielding.

1.1.2.3.2. For a stainless steel welded thick flange, the model indicates 30,000 psi, still in the yield range.

1.1.2.3.3. For a full thickness bolted flange, there are some stress concentrations--1 or 2 cells indicating high stress (an anomaly of the software)--surrounded by reddish colors (13,000-18,000 psi) which are below the ASME limits.

1.1.2.4. To be more conservative, the bolted model was expanded to look at half of the whole shell along a line of symmetry (rather than just the end plate). Pressure was applied to the inside, 200 psi pushing out. It stretched about .75-.8 mm which was considered not significant since the device is 60" long.

1.1.2.5. Further up the canister is a thin walled structure and support rings which will help keep the stress down. The model shows 10,000 psi whereas the limit is 18,000-20,000 psi.

1.1.2.6. There is some stress where the top plate attaches, but not as much stress as on the bottom plate because the top portion does not have as much force applied to it. The bottom portion has water hitting the end plate over the entire area. The top portion has a larger copper section on the inside to allow the beam to come in so there's less water hitting it; this is not significant.

1.1.2.7. There are metal seals which can take the radiation. They have a spring wrap on the inside with a C-channel of metal around it so it compacts slightly and retains its spring; this should work out fine.

1.1.2.8. Where the flange mounting ring contacts the outside cylinder, the model shows there is still quite a bit of stress, above what ASME allows.

1.1.2.9. Not modeled was an internal section of the flange mounting ring to which they could internally weld the cylinder, thereby relieving some of the stress. This is one area he'd ask CPI to make changes to.

1.1.2.10. At the top there is very low stress, only pressure from water applied to a small area.

1.1.2.11. For the ASME stresses of copper, the "ultimate stress" is 30,000-34,000 within the temperature range of 150 degrees F, "yield stress" around 9,000, definitely below 10,000 psi, and they want to see the "allowable stress" below 6,000 psi.

1.1.2.12. Looking at the profile of the inner copper collector, the beam comes in from the top and is dispersed inside the cylinder, with water flowing along the outside through fins. These fins, which are thinner structures and will see stresses, have not been modeled. If fins were put in, there would be added rigidity, thereby making it a better structure.

1.1.2.13. In summary, using the ASME pressure vessel code of materials for a 200 psi hydrostatic pressure test, the order of preferred material for the flanges by decreasing stress is: thin flanges, thin flanges with welding, full thickness flanges with welding, and then full thickness flanges with bolting (this is the best option).

1.1.2.13.1. The interior of the ring (where the ring meets the cylinder wall) should be welded in order to reduce some of the stress.

1.1.2.13.2. The copper collector will definitely withstand the pressure.

1.1.2.13.3. The heat load applied was not modeled because it is a very difficult calculation requiring a full 3D model due to the geometry of the copper collector which has very small fins on it with water flowing through it and a non-uniform power density distribution along the collector. More information from CPI is needed.

1.1.3. There will not be any boiling under the pressures being used as long as the beam is spread out.

1.1.3.1. If there is asymmetric distribution of the beam, and there is a little bit of boiling, it is not known if there could be cavitation effects and damage to the vessel.

1.1.3.2. The design accepted by Saclay does not allow boiling. There will not even be boiling at 1.6 MW.

1.1.4. There is a difference in the thermal expansion between copper and stainless steel. The thermal effects which have an impact on stress should be considered.

1.2. The Committee (S. Kane) will provide the following information to the PM:

1.2.1. Code Stamp Applicability, i.e., there are some exemptions to regulations for water vessels with pressures and water temperatures lower than certain thresholds (300 psi and 99°C). Therefore, the beam dump may not need a Code Stamp or welding certificates; BNL may be able to accept welding assurances.

1.2.2. Verification of the ASME code to confirm that the 80% of yield rule applies.

1.3. The PM agrees to do the following:

1.3.1. Redo the analysis at 70 psi, the actual operating pressure.

1.3.2. Validate the design and material allowables using Division 2.

1.3.3. Examine UG34 for the end conditions of the flanges and joints, and the proper depth of the grooves in the end plate that the copper collector will rest in.
1.3.4. Talk to CPI to see if CPI has done a lifetime calculation on how many MW years the beam dump can run.
1.3.5. Request from Saclay any calculations that CPI performed for them and any documentation that Saclay has.
1.3.6. Request material certifications and welding certifications in the P.O., if necessary.
1.3.7. Request that the copper used comes from the U.S., Western Europe, or Finland.
1.3.8. Contact the LESHC secretary when ready to schedule another meeting.

2. The meeting was adjourned at 2:20 p.m.

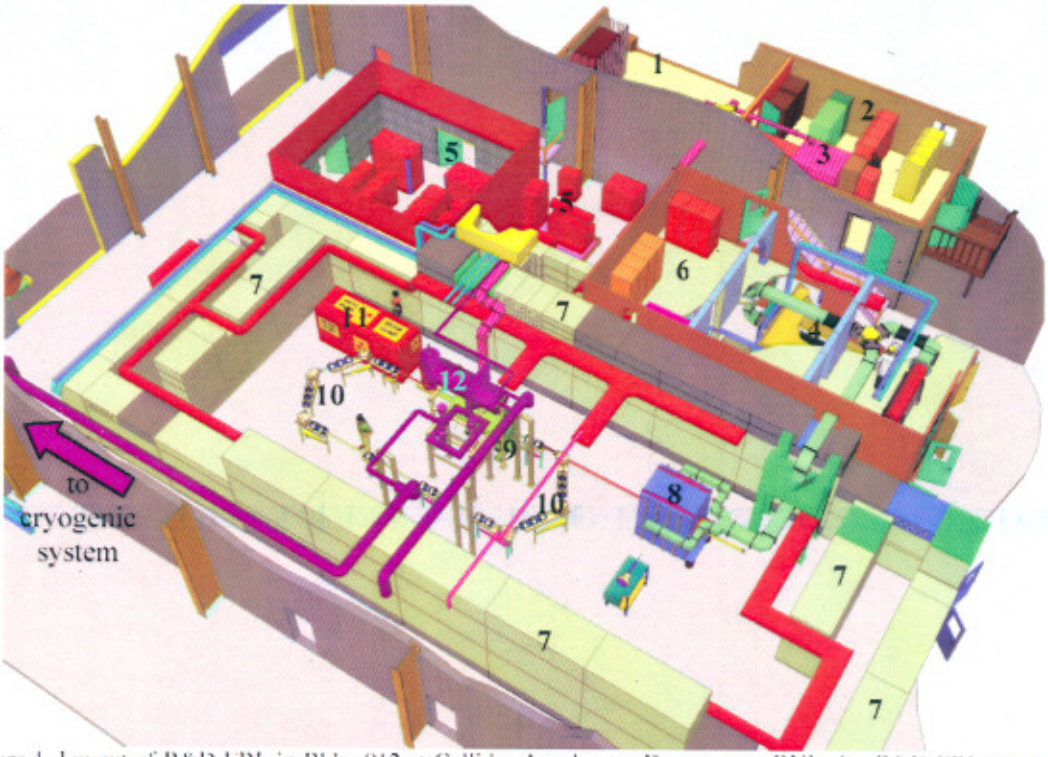

Figure 1. Layout of R&D ERL in Bldg. 912 at Collider-Accelerator Department, BNL: 1 – R&D ERL control room; 2 – diagnostic and control racks; 3 – 703.75 MHz, 50 kW CW RF transmitter; 4 - 703.75 MHz, 1 MW CW klystron; 5- 2 MW CW HV power supply for the klystron; 6 – power supplies and other electronics; 7 – shielded R&D ERL vault with removed roof beams; 8 – 2 MeV, 703.75 MHz SRF photo-injector; 9 – 20 MeV, 703.75 MHz 5-cell SRF linac; 10 – return loop; 11 – beam dump; 12- part of the 1.8 K° cryogenic system (most of the system is outside the picture).

Interlocks

Beam dump will be interlocked to water temperature, water flow, operation of beam spreading magnets, and vacuum. Any indication of possibly exceeding set values will turn-off electron gun.

Relief valves and/or pressure discs will engage when water pressure reaches 110 PSI (under normal operation water pressure in beam dump system is 70 PSI).

KLY GYRO DEVELOPMENT DRAWING Dec 08, 2006 19:27:50

ZONE	REV	DESCRIPTION	ECO	DATE	APPROVED
	1	NEW DRAWING	-	8/30/06	RE
	2	REVISED DESIGN	-	12/5/06	RE
	3	DEL GREEN GLASS		12/7/06	RE

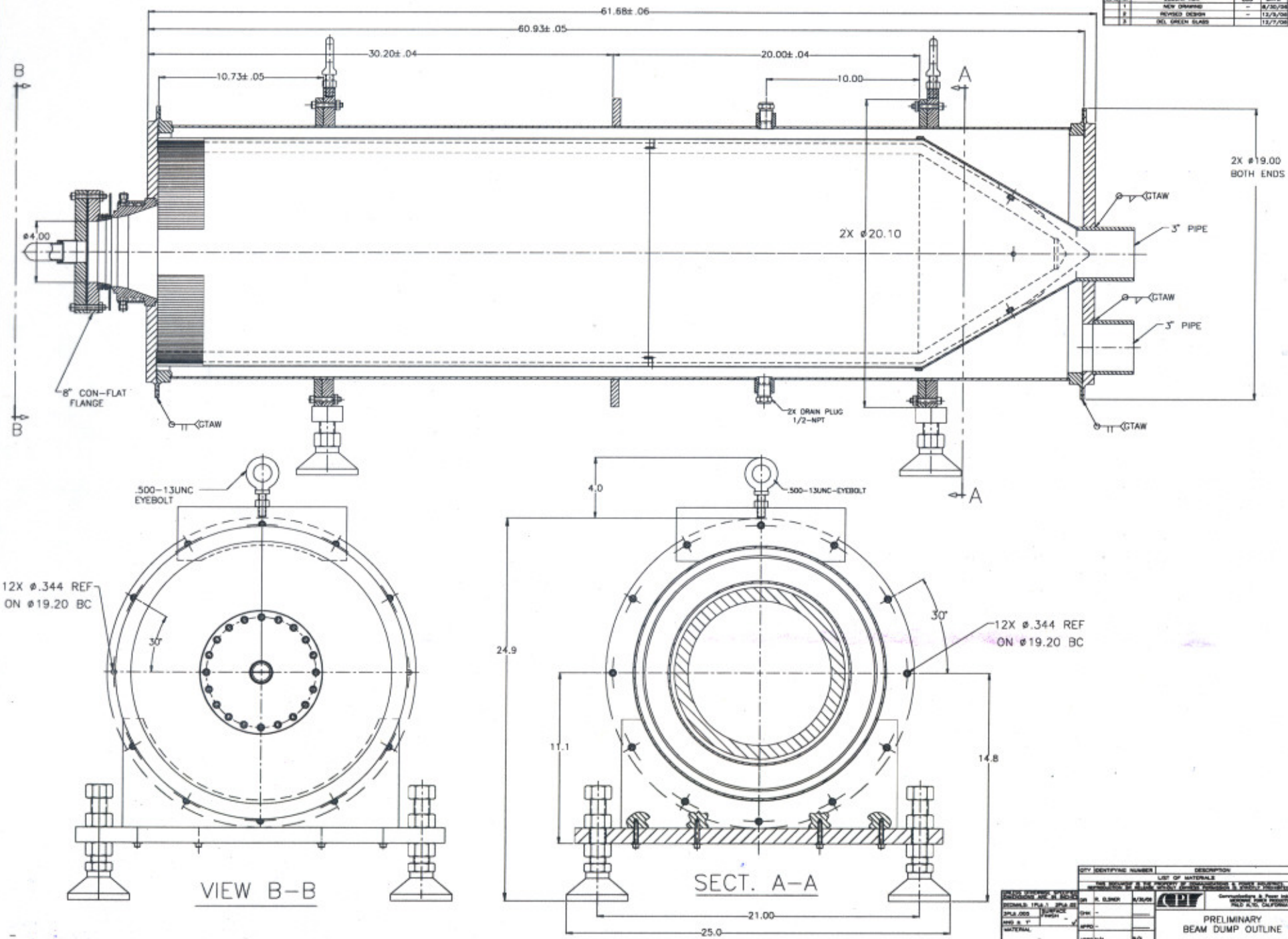

QTY	IDENTIFYING NUMBER	DESCRIPTION	ITEM
		LIST OF MATERIALS	

PRELIMINARY
BEAM DUMP OUTLINE

E199313 | 502083 | 3

SCALE 1/2 | SHEET 1 OF 1

502083

KLY GYRO DEVELOPMENT DRAWING Aug 30, 2006 14:24:33

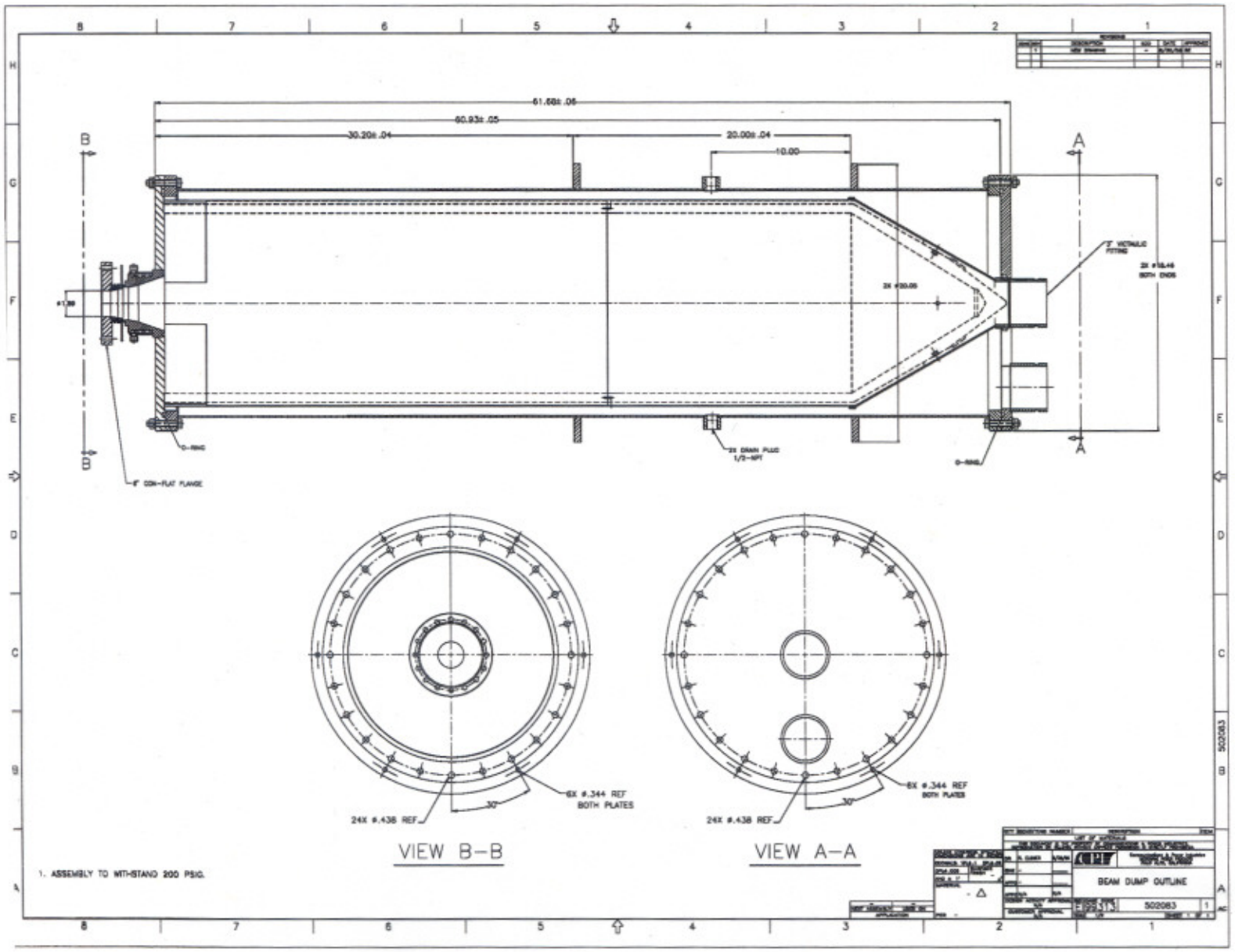

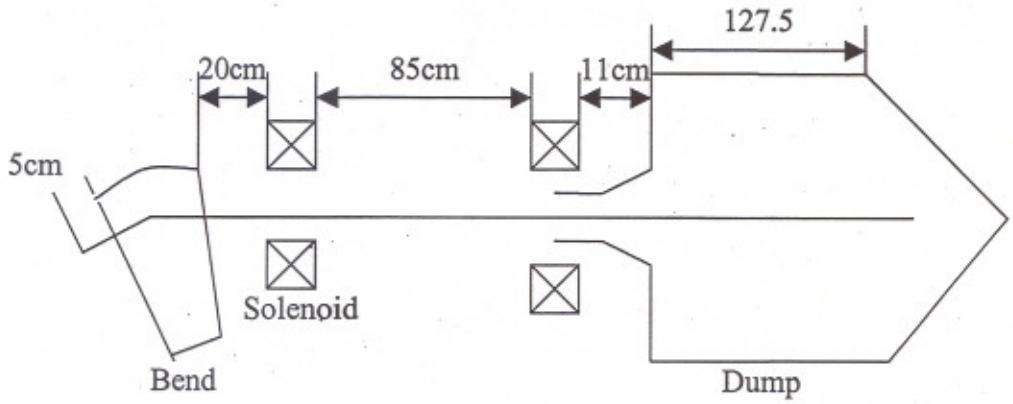
127.5
20cm
85cm
11cm
5cm
Solenoid
Bend
Dump

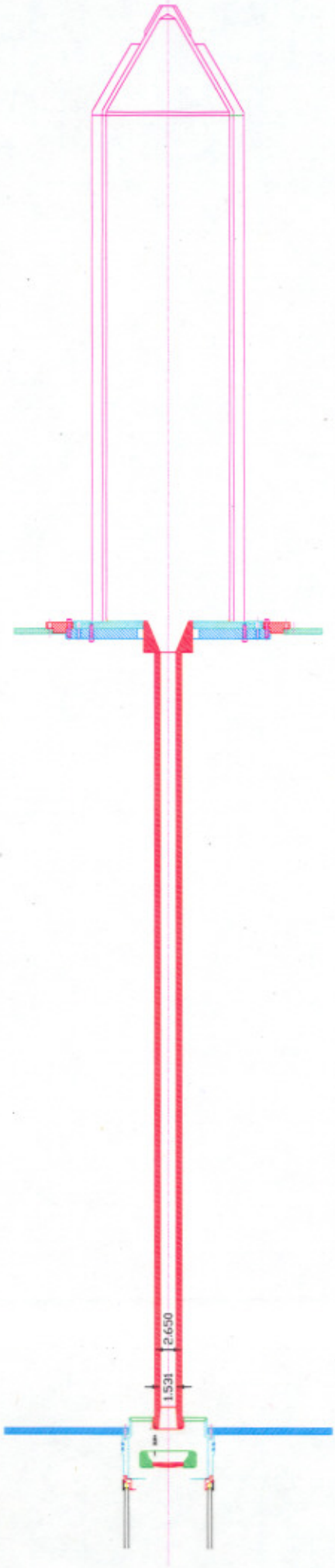
2.650
1.531

Details for BNL Beam Dump

CPI has 2 collector designs available. The first is to utilize the collector built on the VKP-7952B for BNL (1 MW CW at 703.75 MHz). It was operated for 1 hour with the dissipating the full beam power (1.6 MW CW). It incorporated alternating deep and shallow grooves and was designed to have low pressure drop at high flow rates. The groove design allows some boiling, with the expectation ant steam bubbles are condensed before leaving the jacket.

Since then, CPI built a pulsed version of this klystron for CEA Saclay (France). The VKP-7952C is rated for 1 MW peak at 10% duty with 2 msec pulses. The frequency is 704.4 MHz. We reviewed the collector design and developed a collector that is more "conventional" for CPI, in that the simulations don't predict any boiling. The trade-off is higher pressure drop. Although it has not been tested CW, it was designed it for use on a 1 MW CW klystron. It was designed to dissipate 1.6 MW CW at 400 gpm at a pressure drop of less that 70 psig.

The following table answers the questions of your e-mail for both designs.

	VKP-7952B	VKP-7952C
Hydrostatic pressure test (tested)	200 psig	200 psig
Water jacket thickness	.125" SST	.125" SST
Copper Collector ID	12.0"	13.0"
Copper Collector OD	14.8"	14.8"
Groove Geometry	.20"Wx.20"DPx60 .20"Wx.80"DPx60 Alternating	.125"Wx.25"DPx180
Thickness of the copper (bottom of groove to collector ID)	.60"	.65"
Flow and pressure drop rating for 1.6 MW dissipation	70 psig (max) at 400 gpm (max)	70 psig (max) at 400 gpm (max)
Pressure drop - measured	10 psig at 381 gpm	1 psig at 60 gpm
Factory Dissipation Test (1 hour)	1.6 MW with 381 gpm flow	200 kW with 60 gpm flow
Water temperature range	20-70C inlet	20-70C inlet

Beam collector study

Setup:

Gun-to Dump test

Bending dipole:

30 degree, R=60 cm

Spreader:

Focusing solenoid:

L= 10 cm, B= 2.7 kG

Electron Beam parameters:

Charge per bunch = 1.4 nC

KE= 2MeV, I=0.4 A, P=1 MW

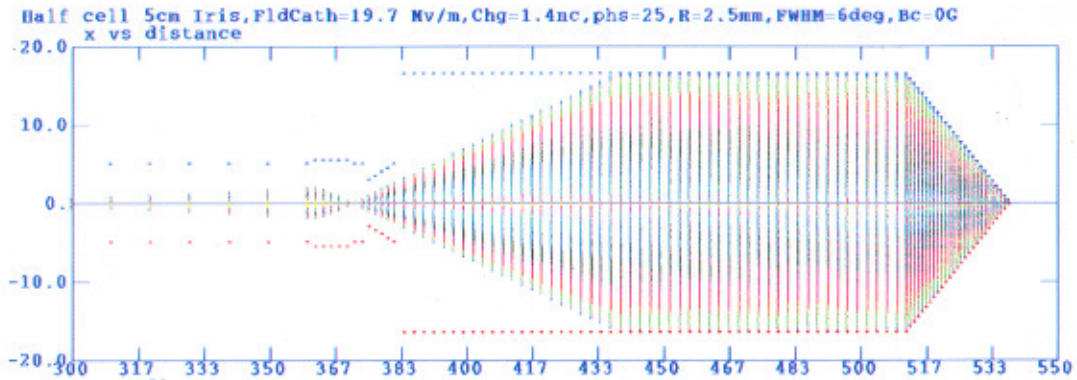

Particles trajectories in collector

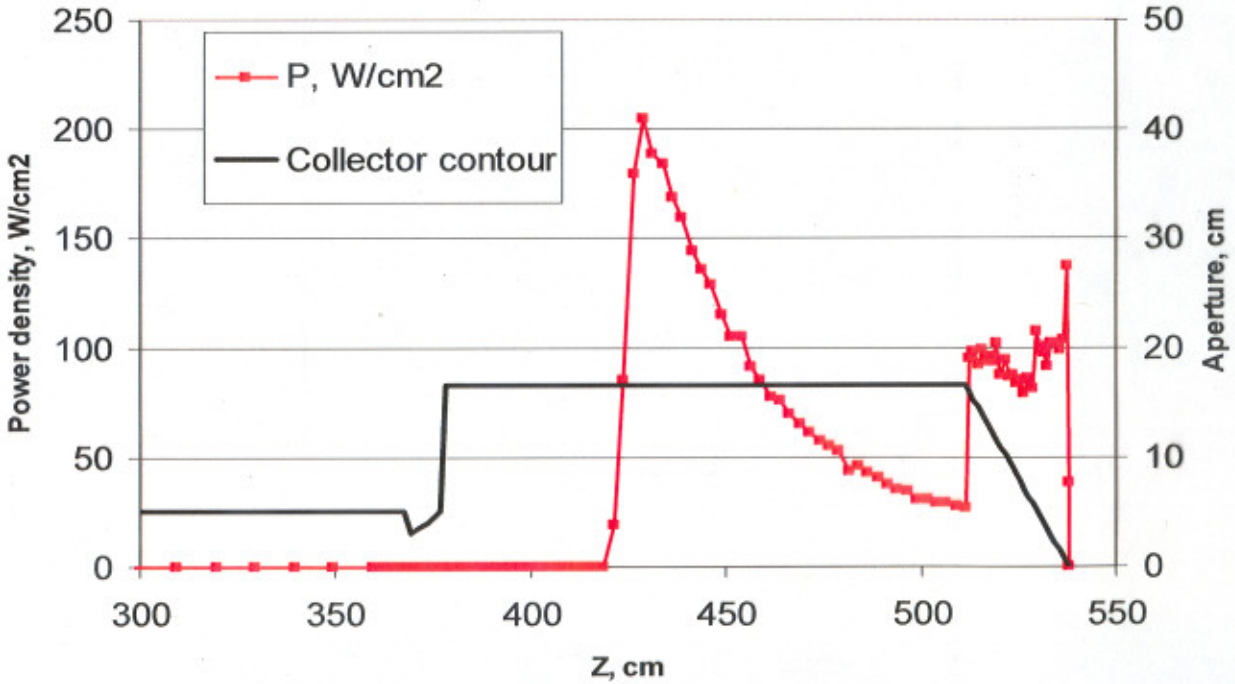

Power density distribution

KLY GYRO DEVELOPMENT DRAWING Dec 08, 2006 19:27:50

REVISIONS					
ZONE	REV	DESCRIPTION	ECO	DATE	APPROVED
	1	NEW DRAWING	–	8/30/06	RE
	2	REVISED DESIGN	–	12/5/06	RE
	3	DEL GREEN GLASS		12/7/06	RE

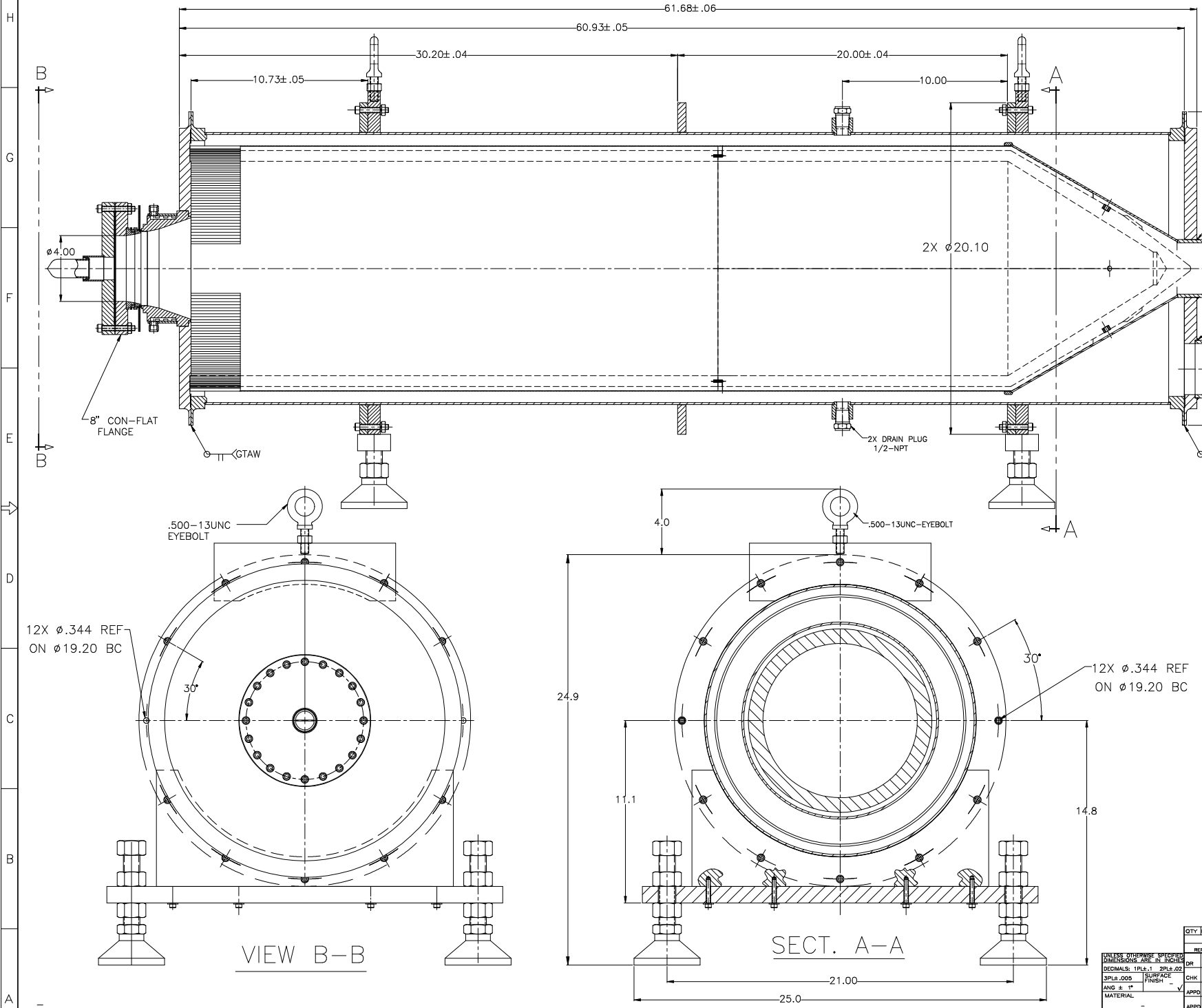

QTY	IDENTIFYING NUMBER	DESCRIPTION	ITEM
		LIST OF MATERIALS	

THIS DOCUMENT IS THE PROPERTY OF COMMUNICATIONS & POWER INDUSTRIES. REPRODUCTION OR RELEASE WITHOUT EXPRESS PERMISSION IS STRICTLY PROHIBITED.

UNLESS OTHERWISE SPECIFIED DIMENSIONS ARE IN INCHES
DECIMALS: 1PL±.1 2PL±.02
3PL±.005 SURFACE FINISH –
ANG ± 1° ✓
MATERIAL –
PER –

DR	R. ELSNER	8/30/06
CHK	–	
APPD	–	
APPD	N/A	N/A
DESIGN ACTIVITY APPROVAL	N/A	
CUSTOMER APPROVAL	N/A	

Communications & Power Industries
MICROWAVE POWER PRODUCTS
PALO ALTO, CALIFORNIA

PRELIMINARY
BEAM DUMP OUTLINE

SIZE	CAGE CODE	
	E99313	502083 3
SCALE 1/2		SHEET 1 OF 1

502083

KLY GYRO DEVELOPMENT DRAWING Dec 08, 2006 19:27:50

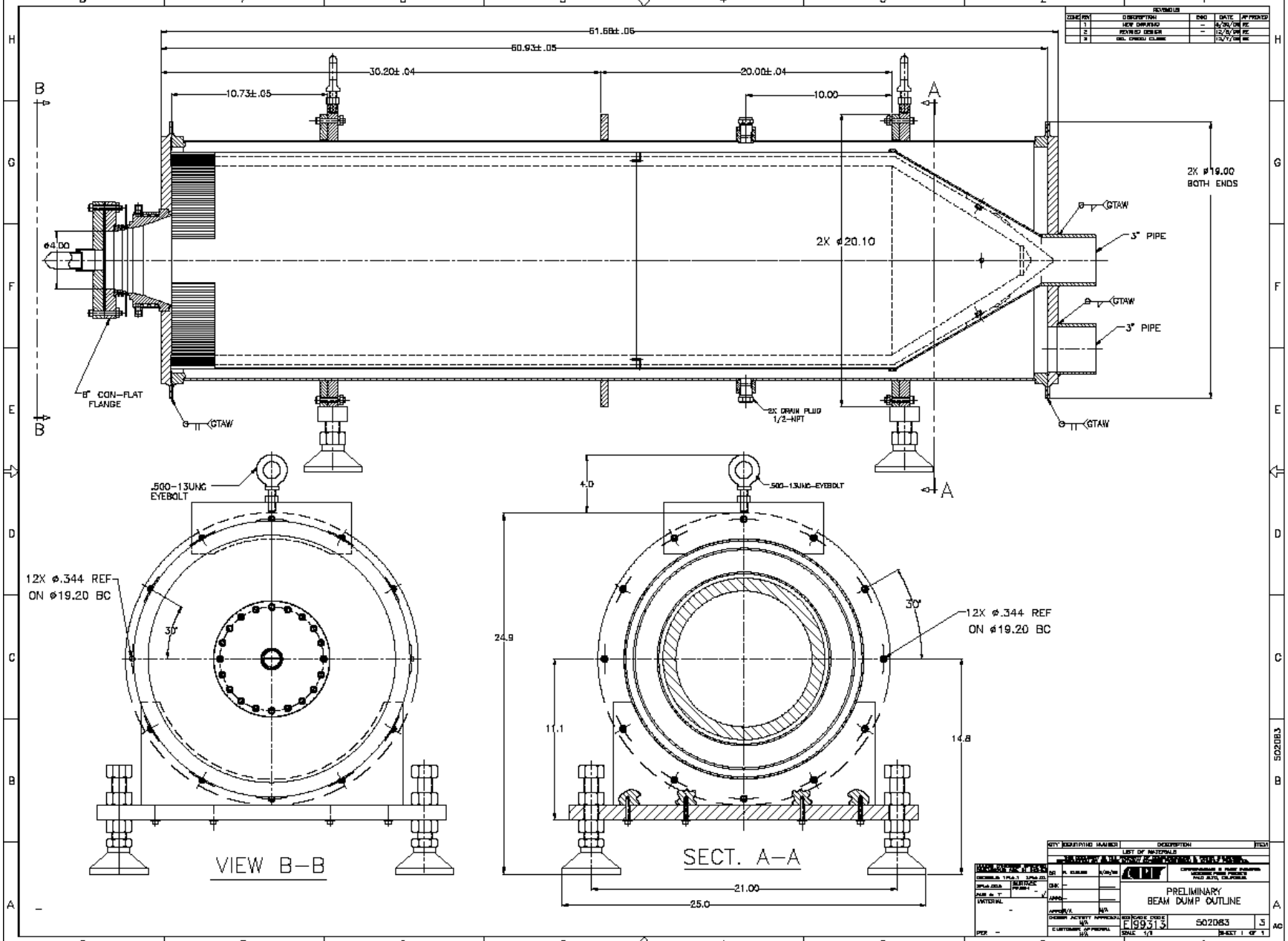

ANSYS – Roark & Young(2h) Comparison

Annular plate with a uniformly distributed pressure q over the portion from r_o to a

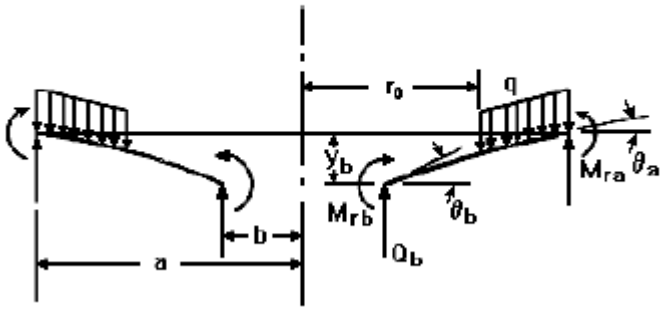

Welded End Plate (Verification of ANSYS results)		
	Δy_{max} (inches)	
	70psi	200psi
Roark & Young	-0.004	-0.01
ANSYS	-0.00348	-0.0099

Outer edge fixed, inner edge guided

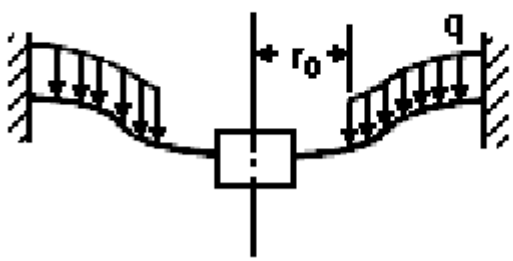

Thin Flange - Welded (200psi)

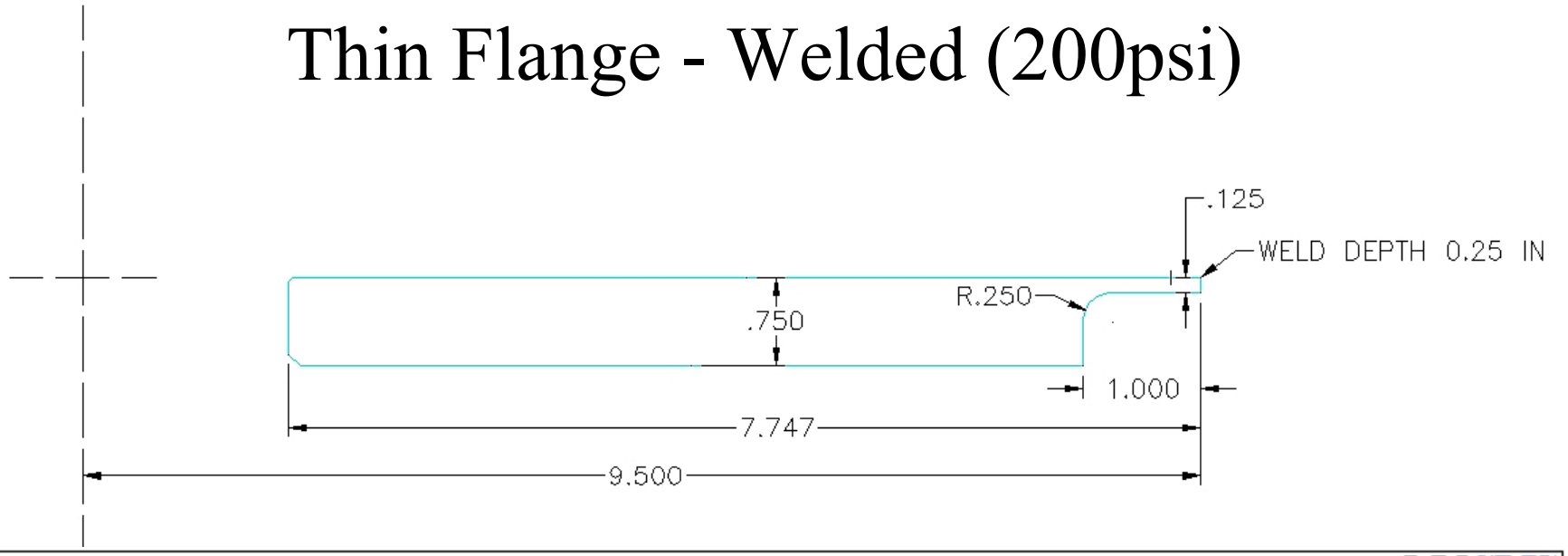

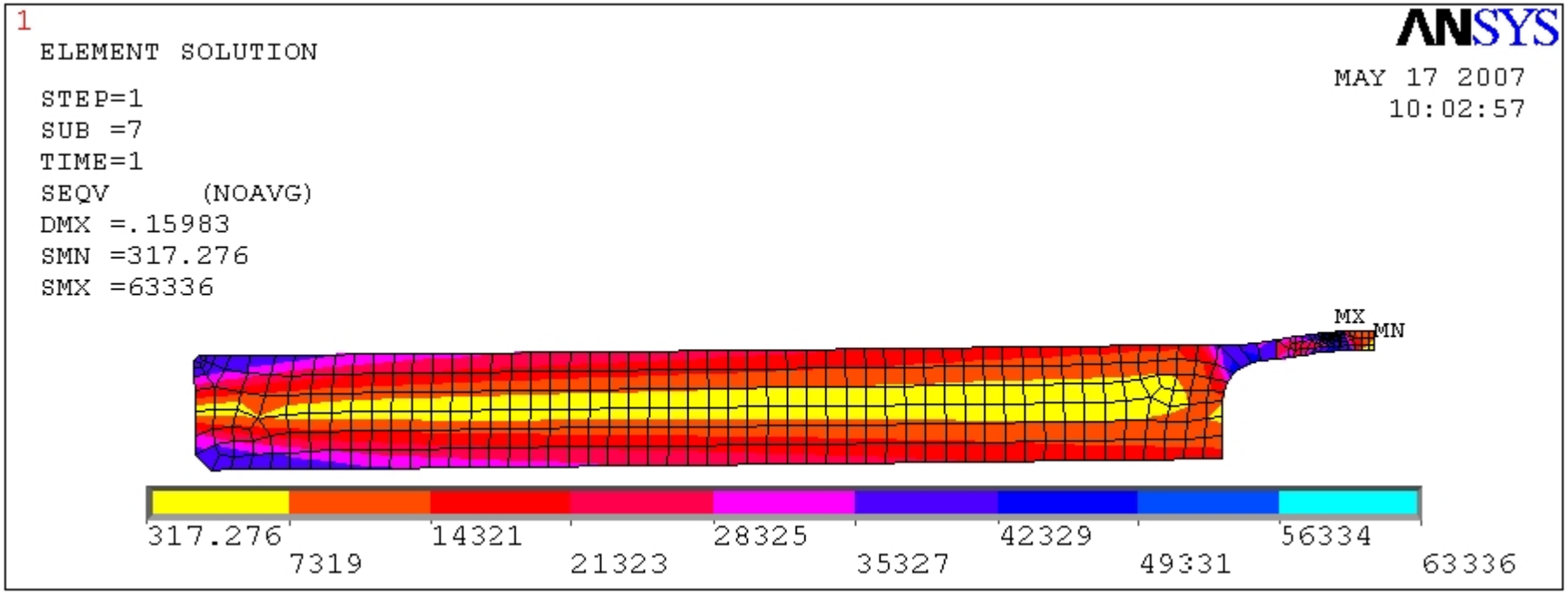

Thick Flange - Welded (200psi)

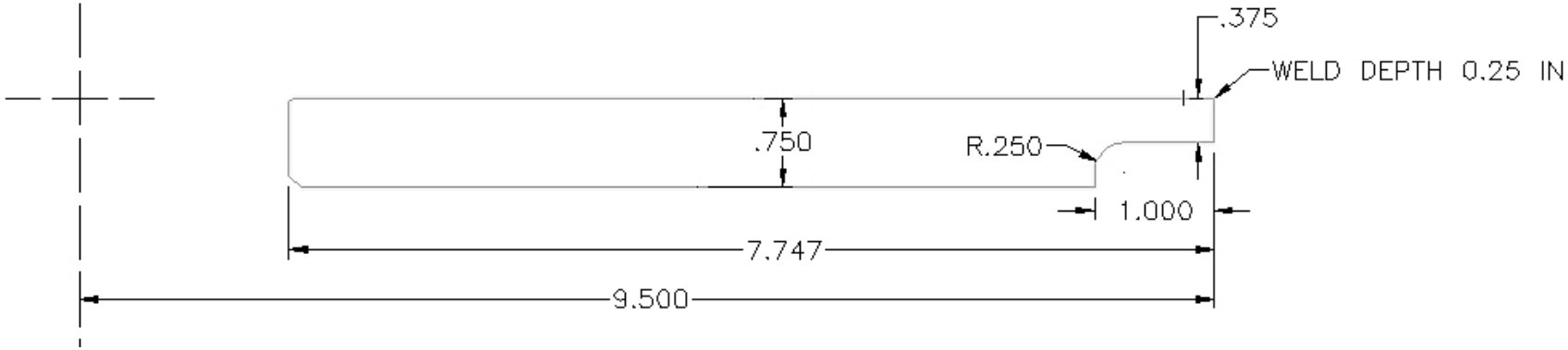

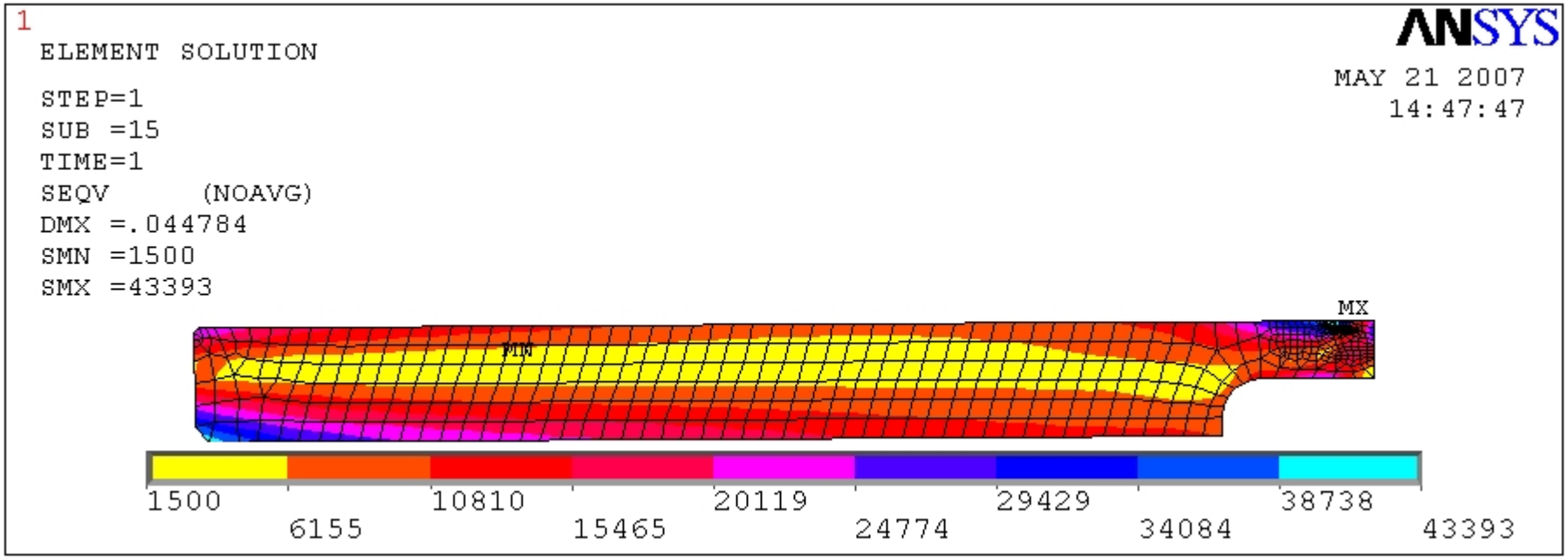

1

ELEMENT SOLUTION

STEP=1
SUB =15
TIME=1
SEQV (NOAVG)
DMX =.044784
SMN =1500
SMX =43393

ANSYS

MAY 21 2007
14:48:19

Thick Flange - Welded (200psi)

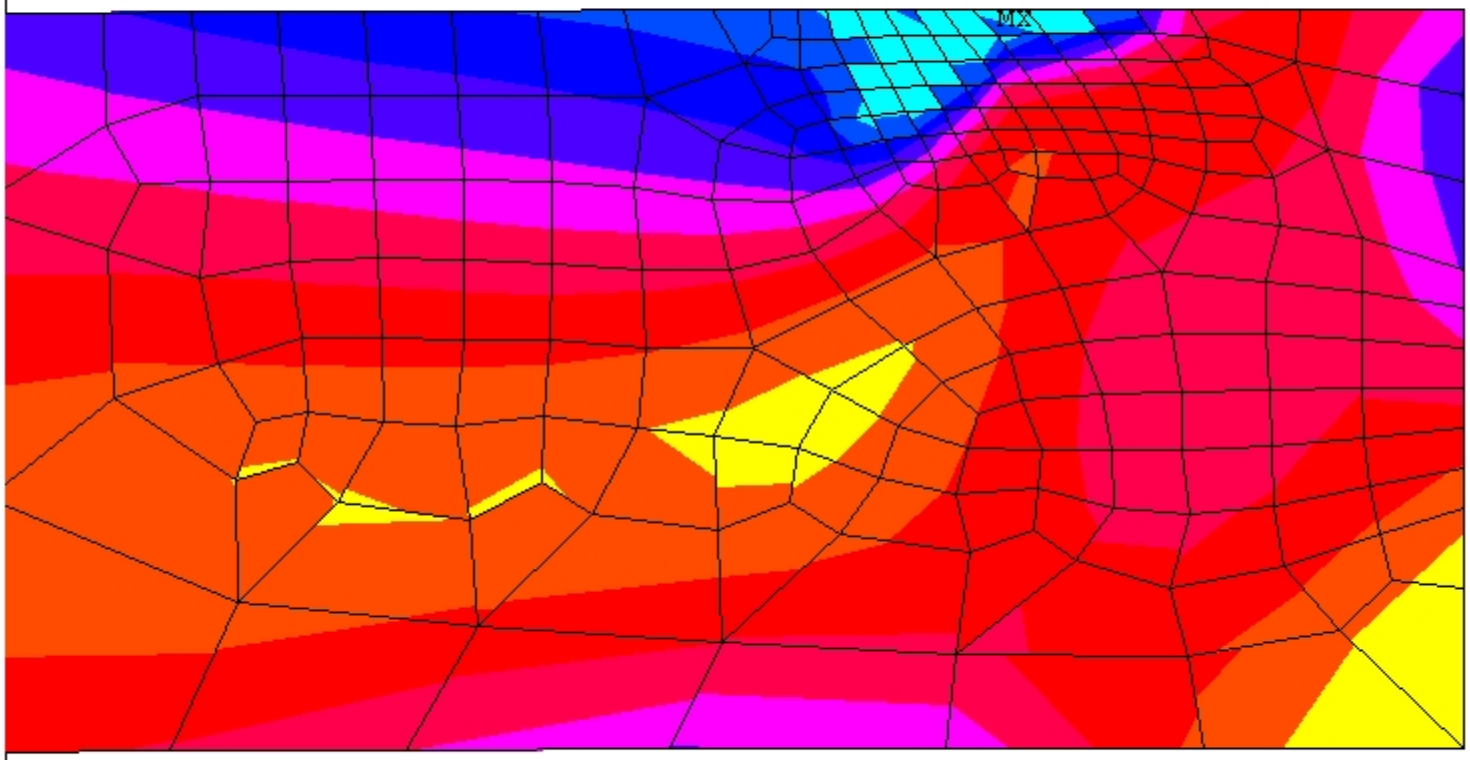

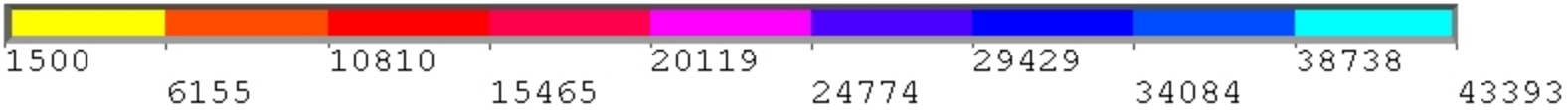

Full Flange - Bolted (200psi)

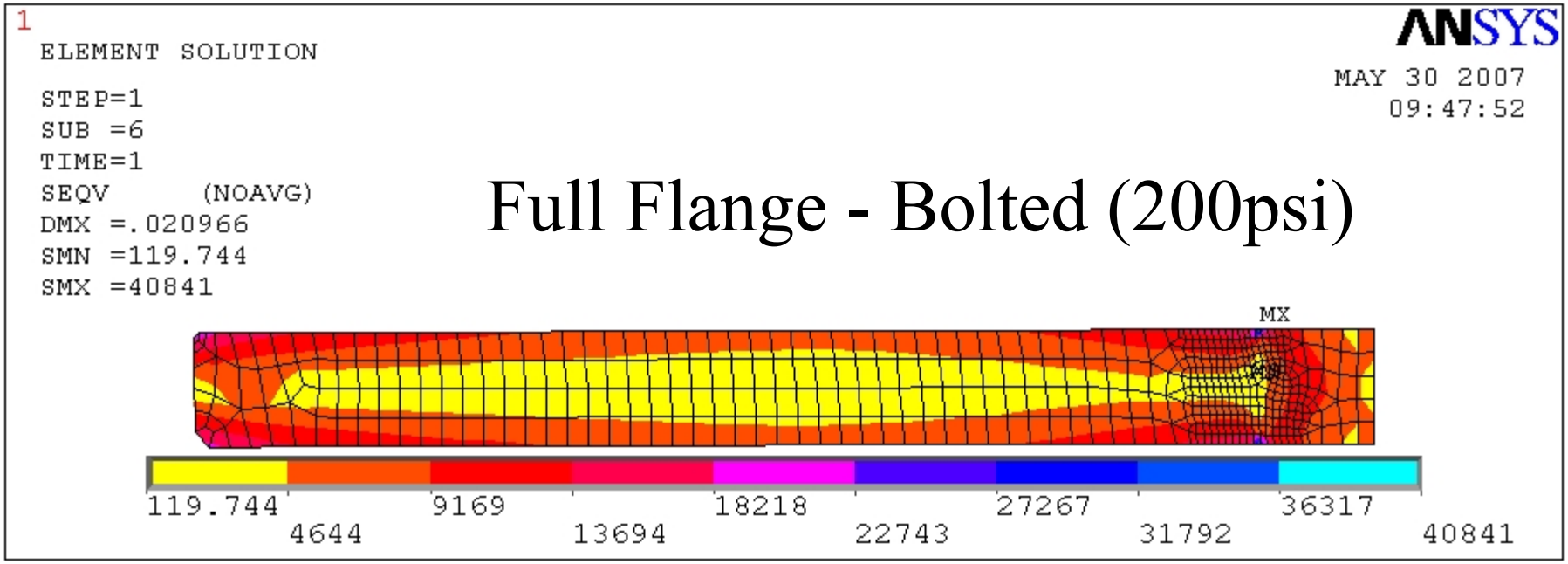

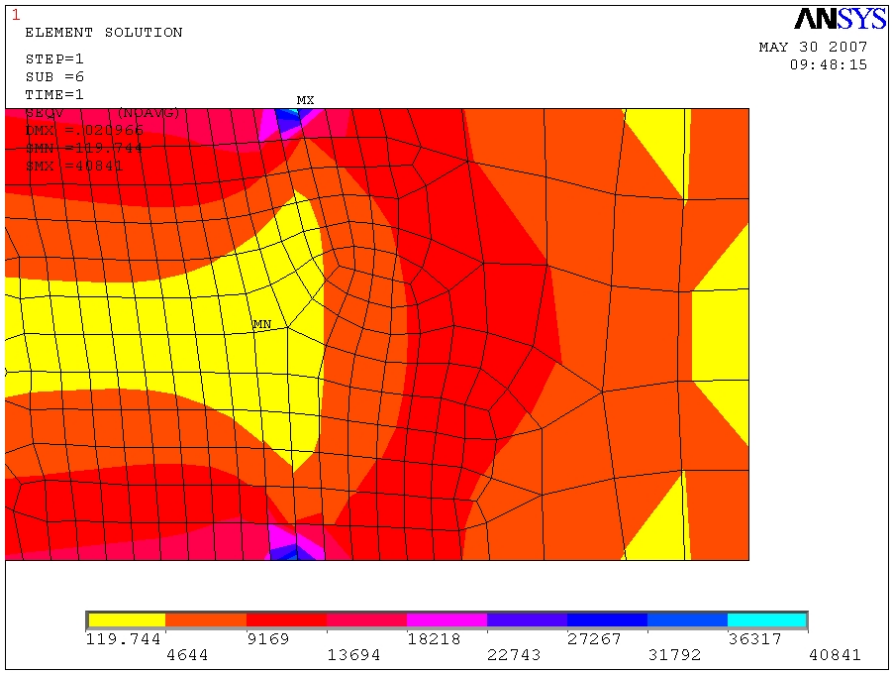

INTERACTIVE TABLE

TABLE 1A (CONT'D)
SECTION I; SECTION III, CLASS 2 AND 3;* SECTION VIII, DIVISION 1; AND SECTION XII
MAXIMUM ALLOWABLE STRESS VALUES *S* FOR FERROUS MATERIALS
(*See Maximum Temperature Limits for Restrictions on Class)

	Line No.	Nominal Composition	Product Form	Spec No.	Type/Grade	Alloy Designation/ UNS No.	Class/ Condition/ Temper	Size/Thickness, in.	P-No.	Group No.
	1	18Cr–8Ni	Wld. tube	SA-688	TP304L	S30403	...	...	8	1
04	2	18Cr–8Ni	Wld. tube	SA-688	TP304L	S30403	...	...	8	1
04	3	18Cr–8Ni	Wld. tube	SA-688	TP304L	S30403	...	...	8	1
	4	18Cr–8Ni	Wld. pipe	SA-813	TP304L	S30403	...	...	8	1
	5	18Cr–8Ni	Wld. pipe	SA-814	TP304L	S30403	...	...	8	1
	6	18Cr–8Ni	Forgings	SA-182	F304	S30400	...	> 5	8	1
	7	18Cr–8Ni	Forgings	SA-182	F304	S30400	...	> 5	8	1
	8	18Cr–8Ni	Forgings	SA-182	F304H	S30409	...	> 5	8	1
	9	18Cr–8Ni	Forgings	SA-182	F304H	S30409	...	> 5	8	1
	10	18Cr–8Ni	Forgings	SA-336	F304	S30400	...	...	8	1
	11	18Cr–8Ni	Forgings	SA-336	F304	S30400	...	...	8	1
	12	18Cr–8Ni	Forgings	SA-336	F304H	S30409	...	...	8	1
	13	18Cr–8Ni	Forgings	SA-336	F304H	S30409	...	...	8	1
	14	18Cr–8Ni	Castings	SA-351	CF3	J92500	...	...	8	1
	15	18Cr–8Ni	Castings	SA-351	CF3	J92500	...	...	8	1
	16	18Cr–8Ni	Castings	SA-351	CF8	J92600	...	...	8	1
	17	18Cr–8Ni	Castings	SA-351	CF8	J92600	...	...	8	1
	18	18Cr–8Ni	Castings	SA-351	CF8	J92600	...	...	8	1
	19	18Cr–8Ni	Smls. pipe	SA-376	TP304	S30400	...	...	8	1
	20	18Cr–8Ni	Smls. pipe	SA-376	TP304	S30400	...	...	8	1
A06	21	...	...	...	...	...	...	...	...	...
A06	22	...	...	...	...	...	...	...	...	...
A06	23	...	...	...	...	...	...	...	...	...
A06	24	...	...	...	...	...	...	...	...	...
	25	18Cr–8Ni	Cast pipe	SA-451	CPF3	J92500	...	...	8	1
	26	18Cr–8Ni	Cast pipe	SA-451	CPF8	J92600	...	...	8	1
	27	18Cr–8Ni	Forgings	SA-182	F304	S30400	...	≤ 5	8	1
	28	18Cr–8Ni	Forgings	SA-182	F304	S30400	...	≤ 5	8	1
	29	18Cr–8Ni	Forgings	SA-182	F304H	S30409	...	≤ 5	8	1
	30	18Cr–8Ni	Forgings	SA-182	F304H	S30409	...	≤ 5	8	1
	31	18Cr–8Ni	Smls. tube	SA-213	TP304	S30400	...	...	8	1
	32	18Cr–8Ni	Smls. tube	SA-213	TP304	S30400	...	...	8	1
	33	18Cr–8Ni	Smls. tube	SA-213	TP304H	S30409	...	...	8	1
	34	18Cr–8Ni	Smls. tube	SA-213	TP304H	S30409	...	...	8	1
	35	18Cr–8Ni	Plate	SA-240	302	S30200	...	...	8	1
	36	18Cr–8Ni	Plate	SA-240	302	S30200	...	...	8	1
	37	18Cr–8Ni	Plate	SA-240	304	S30400	...	...	8	1
	38	18Cr–8Ni	Plate	SA-240	304	S30400	...	...	8	1
	39	18Cr–8Ni	Plate	SA-240	304H	S30409	...	...	8	1
	40	18Cr–8Ni	Plate	SA-240	304H	S30409	...	...	8	1

ASME – 304SS

TABLE 1A (CONT'D)
SECTION I; SECTION III, CLASS 2 AND 3;* SECTION VIII, DIVISION 1; AND SECTION XII
MAXIMUM ALLOWABLE STRESS VALUES *S* FOR FERROUS MATERIALS
(*See Maximum Temperature Limits for Restrictions on Class)

Line No.	Min. Tensile Strength, ksi	Min. Yield Strength, ksi	Applicability and Max. Temperature Limits (NP = Not Permitted) (SPT = Supports Only) I	III	VIII-1	XII	External Pressure Chart No.	Notes	
1	70	25	NP	800	NP	NP	HA-3	G5, W12	
2	70	25	NP	NP	1200	650	HA-3	G5, G24, T4	04
3	70	25	NP	NP	1200	650	HA-3	G24, T6	04
4	70	25	NP	800	NP	NP	HA-3	G5, W12	
5	70	25	NP	800	NP	NP	HA-3	G5, W12	
6	70	30	1500	800	1500	650	HA-1	G5, G12, T7	
7	70	30	1500	NP	1500	650	HA-1	G12, T8	
8	70	30	1500	800	1500	NP	HA-1	G5, T7	
9	70	30	1500	NP	1500	NP	HA-1	T8	
10	70	30	1500	800	1500	650	HA-1	G5, G12, T7	
11	70	30	1500	NP	1500	650	HA-1	G12, T8	
12	70	30	NP	800	1500	NP	HA-1	G5, T7	
13	70	30	NP	NP	1500	NP	HA-1	T8	
14	70	30	NP	800	800	650	HA-3	G1, G5, G16, G17, G32	
15	70	30	NP	NP	800	650	HA-3	G1, G32	
16	70	30	1500	800	NP	NP	HA-1	G1, G5, G12, G16, G17, G32, H1, T6	
17	70	30	1500	NP	1500	650	HA-1	G1, G12, G32, H1, T7	
18	70	30	NP	NP	1500	650	HA-1	G1, G5, G12, G32, T6	
19	70	30	NP	800	1500	650	HA-1	G5, G12, S9, T7	
20	70	30	NP	NP	1500	650	HA-1	G12, S9, T8	
21	...	...	...	...	...	...	...	...	A06
22	...	...	...	...	...	...	...	...	A06
23	...	...	...	...	...	...	...	...	A06
24	...	...	...	...	...	...	...	...	A06
25	70	30	NP	800	NP	NP	HA-3	G5, G16, G17, G32	
26	70	30	NP	800	NP	NP	HA-1	G5, G16, G17, G32	
27	75	30	1500	NP	1500	NP	HA-1	G12, T8	
28	75	30	1500	800	1500	NP	HA-1	G5, G12, T7	
29	75	30	1500	NP	1500	NP	HA-1	T8	
30	75	30	1500	800	1500	NP	HA-1	G5, T7	
31	75	30	1500	NP	1500	NP	HA-1	G12, T8	
32	75	30	1500	800	1500	NP	HA-1	G5, G12, T7	
33	75	30	1500	NP	1500	NP	HA-1	T8	
34	75	30	1500	800	1500	NP	HA-1	G5, T7	
35	75	30	NP	NP	750	650	HA-1	G5	
36	75	30	NP	NP	750	650	HA-1	...	
37	75	30	1500	NP	1500	650	HA-1	G12, T8	
38	75	30	1500	800	1500	650	HA-1	G5, G12, H1, T7	
39	75	30	1500	800	1500	NP	HA-1	G5, T7	
40	75	30	1500	NP	1500	NP	HA-1	T8	

TABLE 1A (CONT'D)
SECTION I; SECTION III, CLASS 2 AND 3;* SECTION VIII, DIVISION 1; AND SECTION XII
MAXIMUM ALLOWABLE STRESS VALUES *S* FOR FERROUS MATERIALS
(*See Maximum Temperature Limits for Restrictions on Class)

	Line No.	Maximum Allowable Stress, ksi (Multiply by 1000 to Obtain psi), for Metal Temperature, °F, Not Exceeding													
		−20 to 100	150	200	250	300	400	500	600	650	700	750	800	850	900
	1	16.7	...	16.7	...	16.7	15.8	14.7	14.0	13.7	13.5	13.3	13.0	...	...
04	2	14.2	...	14.2	...	14.2	13.4	12.5	11.9	11.7	11.4	11.3	11.1	10.9	10.1
04	3	14.2	...	12.1	...	10.9	9.9	9.3	8.8	8.6	8.5	8.3	8.2	8.1	7.9
	4	16.7	...	16.7	...	16.7	15.8	14.7	14.0	13.7	13.5	13.3	13.0	...	...
	5	16.7	...	16.7	...	16.7	15.8	14.7	14.0	13.7	13.5	13.3	13.0	...	...
	6	20.0	...	18.9	...	17.7	17.1	16.9	16.6	16.2	15.8	15.5	15.2	14.9	14.6
	7	20.0	...	16.7	...	15.0	13.8	12.9	12.3	12.0	11.7	11.5	11.2	11.0	10.8
	8	20.0	...	18.9	...	17.7	17.1	16.9	16.6	16.2	15.8	15.5	15.2	14.9	14.6
	9	20.0	...	16.7	...	15.0	13.8	12.9	12.3	12.0	11.7	11.5	11.2	11.0	10.8
	10	20.0	...	18.9	...	17.7	17.1	16.9	16.6	16.2	15.8	15.5	15.2	14.9	14.6
	11	20.0	...	16.7	...	15.0	13.8	12.9	12.3	12.0	11.7	11.5	11.2	11.0	10.8
	12	20.0	...	18.9	...	17.7	17.1	16.9	16.6	16.2	15.8	15.5	15.2	14.9	14.6
	13	20.0	...	16.7	...	15.0	13.8	12.9	12.3	12.0	11.7	11.5	11.2	11.0	10.8
	14	20.0	...	18.9	...	17.7	17.1	16.9	16.6	16.2	15.8	15.5	15.2	...	...
	15	20.0	...	16.7	...	15.0	13.8	12.9	12.3	12.0	11.7	11.5	11.2	...	...
	16	20.0	...	18.9	...	17.7	17.1	16.9	16.6	16.2	15.8	15.5	15.2	14.9	14.6
	17	20.0	...	16.7	...	15.0	13.8	12.9	12.3	12.0	11.7	11.5	11.2	11.0	10.8
	18	20.0	...	18.9	...	17.7	17.1	16.9	16.6	16.2	15.8	15.5	15.2	14.9	14.6
	19	20.0	...	18.9	...	17.7	17.1	16.9	16.6	16.2	15.8	15.5	15.2	14.9	14.6
	20	20.0	...	16.7	...	15.0	13.8	12.9	12.3	12.0	11.7	11.5	11.2	11.0	10.8
A06	21	...	...	...	...	...	...	...	...	...	...	...	...	...	...
A06	22	...	...	...	...	...	...	...	...	...	...	...	...	...	...
A06	23	...	...	...	...	...	...	...	...	...	...	...	...	...	...
A06	24	...	...	...	...	...	...	...	...	...	...	...	...	...	...
	25	20.0	...	18.9	...	17.7	17.1	16.9	16.6	16.2	15.8	15.5	15.2	...	...
	26	20.0	...	18.9	...	17.7	17.1	16.9	16.6	16.2	15.8	15.5	15.2	...	...
	27	20.0	...	16.7	...	15.0	13.8	12.9	12.3	12.0	11.7	11.5	11.2	11.0	10.8
	28	20.0	...	20.0	...	18.9	18.3	17.5	16.6	16.2	15.8	15.5	15.2	14.9	14.6
	29	20.0	...	16.7	...	15.0	13.8	12.9	12.3	12.0	11.7	11.5	11.2	11.0	10.8
	30	20.0	...	20.0	...	18.9	18.3	17.5	16.6	16.2	15.8	15.5	15.2	14.9	14.6
	31	20.0	...	16.7	...	15.0	13.8	12.9	12.3	12.0	11.7	11.5	11.2	11.0	10.8
	32	20.0	...	20.0	...	18.9	18.3	17.5	16.6	16.2	15.8	15.5	15.2	14.9	14.6
	33	20.0	...	16.7	...	15.0	13.8	12.9	12.3	12.0	11.7	11.5	11.2	11.0	10.8
	34	20.0	...	20.0	...	18.9	18.3	17.5	16.6	16.2	15.8	15.5	15.2	14.9	14.6
	35	20.0	...	20.0	...	18.9	18.3	17.5	16.6	16.2	15.8	15.5	...	...	...
	36	20.0	...	16.7	...	15.0	13.8	12.9	12.3	12.0	11.7	11.5	...	...	...
	37	20.0	...	16.7	...	15.0	13.8	12.9	12.3	12.0	11.7	11.5	11.2	11.0	10.8
	38	20.0	...	20.0	...	18.9	18.3	17.5	16.6	16.2	15.8	15.5	15.2	14.9	14.6
	39	20.0	...	20.0	...	18.9	18.3	17.5	16.6	16.2	15.8	15.5	15.2	14.9	14.6
	40	20.0	...	16.7	...	15.0	13.8	12.9	12.3	12.0	11.7	11.5	11.2	11.0	10.8

TABLE 1A (CONT'D)
SECTION I; SECTION III, CLASS 2 AND 3;* SECTION VIII, DIVISION 1; AND SECTION XII
MAXIMUM ALLOWABLE STRESS VALUES *S* FOR FERROUS MATERIALS
(*See Maximum Temperature Limits for Restrictions on Class)

Line No.	Maximum Allowable Stress, ksi (Multiply by 1000 to Obtain psi), for Metal Temperature, °F, Not Exceeding															
	950	1000	1050	1100	1150	1200	1250	1300	1350	1400	1450	1500	1550	1600	1650	
1	...	...	...	...	...	...	...	...	...	...	...	...	...	...	...	
2	8.4	6.6	5.4	4.3	3.4	2.7	...	...	...	...	...	...	...	...	...	04
3	7.7	6.6	5.4	4.3	3.4	2.7	...	...	...	...	...	...	...	...	...	04
4	...	...	...	...	...	...	...	...	...	...	...	...	...	...	...	
5	...	...	...	...	...	...	...	...	...	...	...	...	...	...	...	
6	14.3	14.0	12.4	9.8	7.7	6.1	4.7	3.7	2.9	2.3	1.8	1.4	...	...	...	
7	10.6	10.4	10.1	9.8	7.7	6.1	4.7	3.7	2.9	2.3	1.8	1.4	...	...	...	
8	14.3	14.0	12.4	9.8	7.7	6.1	4.7	3.7	2.9	2.3	1.8	1.4	...	...	...	
9	10.6	10.4	10.1	9.8	7.7	6.1	4.7	3.7	2.9	2.3	1.8	1.4	...	...	...	
10	14.3	14.0	12.4	9.8	7.7	6.1	4.7	3.7	2.9	2.3	1.8	1.4	...	...	...	
11	10.6	10.4	10.1	9.8	7.7	6.1	4.7	3.7	2.9	2.3	1.8	1.4	...	...	...	
12	14.3	14.0	12.4	9.8	7.7	6.1	4.7	3.7	2.9	2.3	1.8	1.4	...	...	...	
13	10.6	10.4	10.1	9.8	7.7	6.1	4.7	3.7	2.9	2.3	1.8	1.4	...	...	...	
14	...	...	...	...	...	...	...	...	...	...	...	...	...	...	...	
15	...	...	...	...	...	...	...	...	...	...	...	...	...	...	...	
16	14.3	12.2	9.5	7.5	6.0	4.8	3.9	3.3	2.7	2.3	2.0	1.7	...	...	...	
17	10.6	10.4	9.5	7.5	6.0	4.8	3.9	3.3	2.7	2.3	2.0	1.7	...	...	...	
18	14.3	12.2	9.5	7.5	6.0	4.8	3.9	3.3	2.7	2.3	2.0	1.7	...	...	...	
19	14.3	14.0	12.4	9.8	7.7	6.1	4.7	3.7	2.9	2.3	1.8	1.4	...	...	...	
20	10.6	10.4	10.1	9.8	7.7	6.1	4.7	3.7	2.9	2.3	1.8	1.4	...	...	...	
21	...	...	...	...	...	...	...	...	...	...	...	...	...	...	...	A06
22	...	...	...	...	...	...	...	...	...	...	...	...	...	...	...	A06
23	...	...	...	...	...	...	...	...	...	...	...	...	...	...	...	A06
24	...	...	...	...	...	...	...	...	...	...	...	...	...	...	...	A06
25	...	...	...	...	...	...	...	...	...	...	...	...	...	...	...	
26	...	...	...	...	...	...	...	...	...	...	...	...	...	...	...	
27	10.6	10.4	10.1	9.8	7.7	6.1	4.7	3.7	2.9	2.3	1.8	1.4	...	...	...	
28	14.3	14.0	12.4	9.8	7.7	6.1	4.7	3.7	2.9	2.3	1.8	1.4	...	...	...	
29	10.6	10.4	10.1	9.8	7.7	6.1	4.7	3.7	2.9	2.3	1.8	1.4	...	...	...	
30	14.3	14.0	12.4	9.8	7.7	6.1	4.7	3.7	2.9	2.3	1.8	1.4	...	...	...	
31	10.6	10.4	10.1	9.8	7.7	6.1	4.7	3.7	2.9	2.3	1.8	1.4	...	...	...	
32	14.3	14.0	12.4	9.8	7.7	6.1	4.7	3.7	2.9	2.3	1.8	1.4	...	...	...	
33	10.6	10.4	10.1	9.8	7.7	6.1	4.7	3.7	2.9	2.3	1.8	1.4	...	...	...	
34	14.3	14.0	12.4	9.8	7.7	6.1	4.7	3.7	2.9	2.3	1.8	1.4	...	...	...	
35	...	...	...	...	...	...	...	...	...	...	...	...	...	...	...	
36	...	...	...	...	...	...	...	...	...	...	...	...	...	...	...	
37	10.6	10.4	10.1	9.8	7.7	6.1	4.7	3.7	2.9	2.3	1.8	1.4	...	...	...	
38	14.3	14.0	12.4	9.8	7.7	6.1	4.7	3.7	2.9	2.3	1.8	1.4	...	...	...	
39	14.3	14.0	12.4	9.8	7.7	6.1	4.7	3.7	2.9	2.3	1.8	1.4	...	...	...	
40	10.6	10.4	10.1	9.8	7.7	6.1	4.7	3.7	2.9	2.3	1.8	1.4	...	...	...	

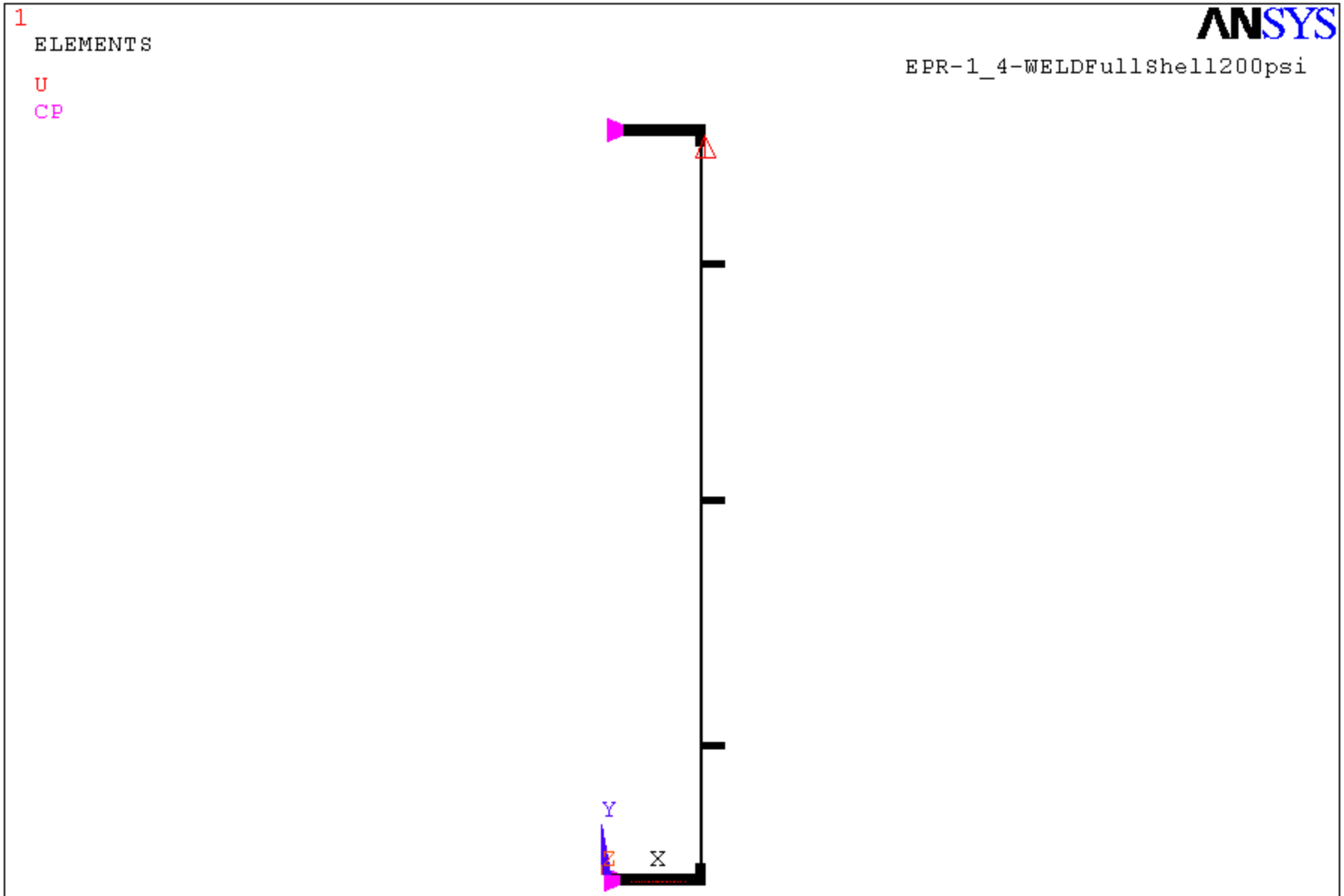

Full Shell – relief welded

1

LINES

TYPE NUM

U

PRES-NORM
200

ANSYS

EPR-1_4-WELDFullShell200psi

1

NODAL SOLUTION

STEP=1
SUB =1
TIME=1
UY (AVG)
RSYS=0
DMX =.032383
SMN =-.032382
SMX =.238E-04

U
CP

ANSYS

EPR-1_4-WELDFullShell200psi

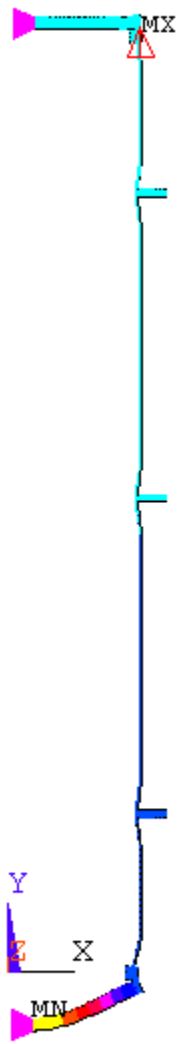

Full Flange

Welded (200psi)

-deltaY

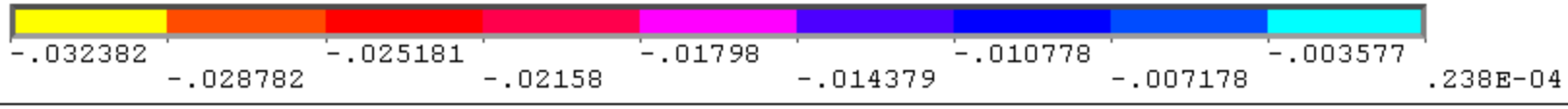

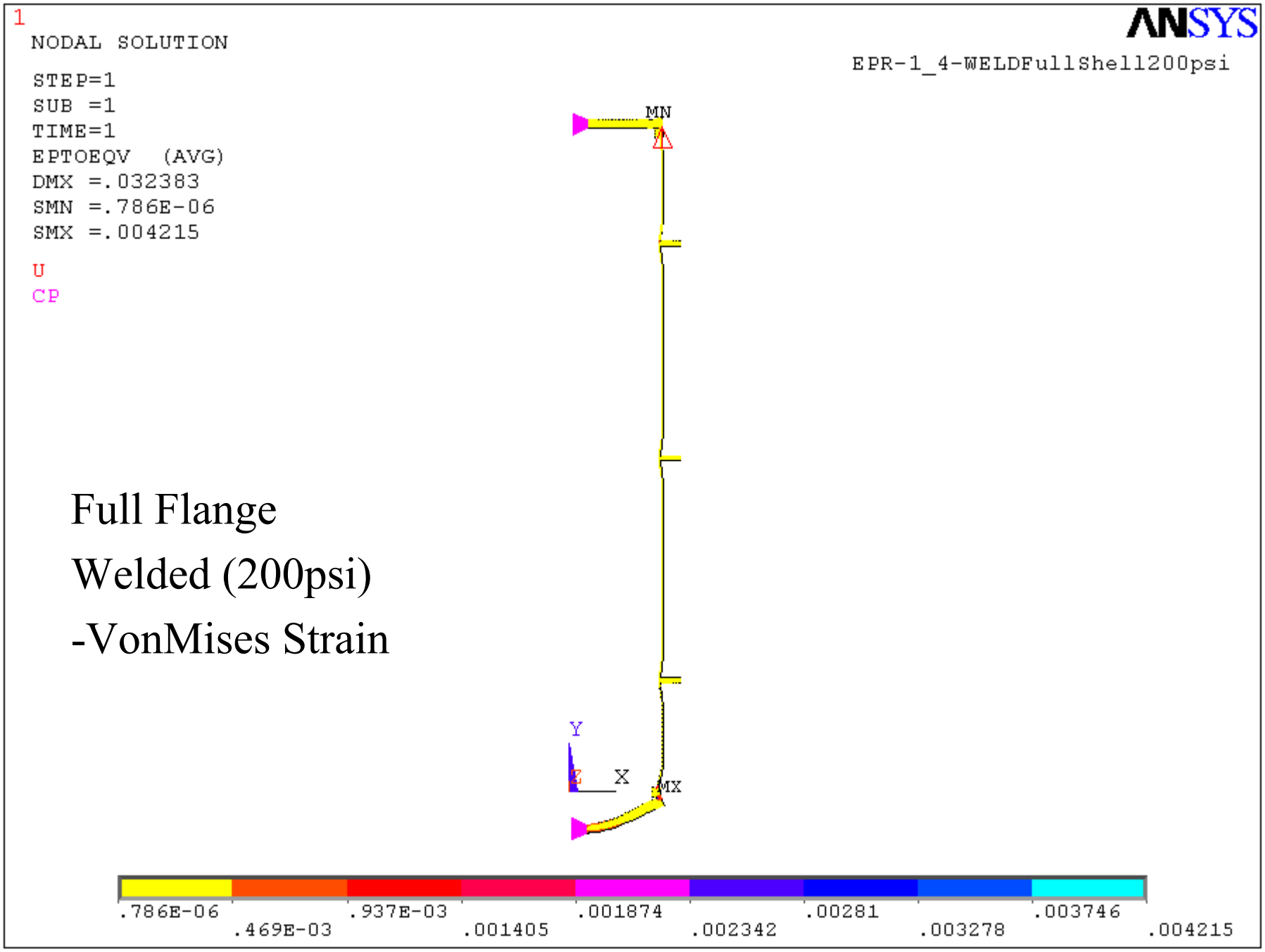

Full Flange

Welded (200psi)

-VonMises Strain

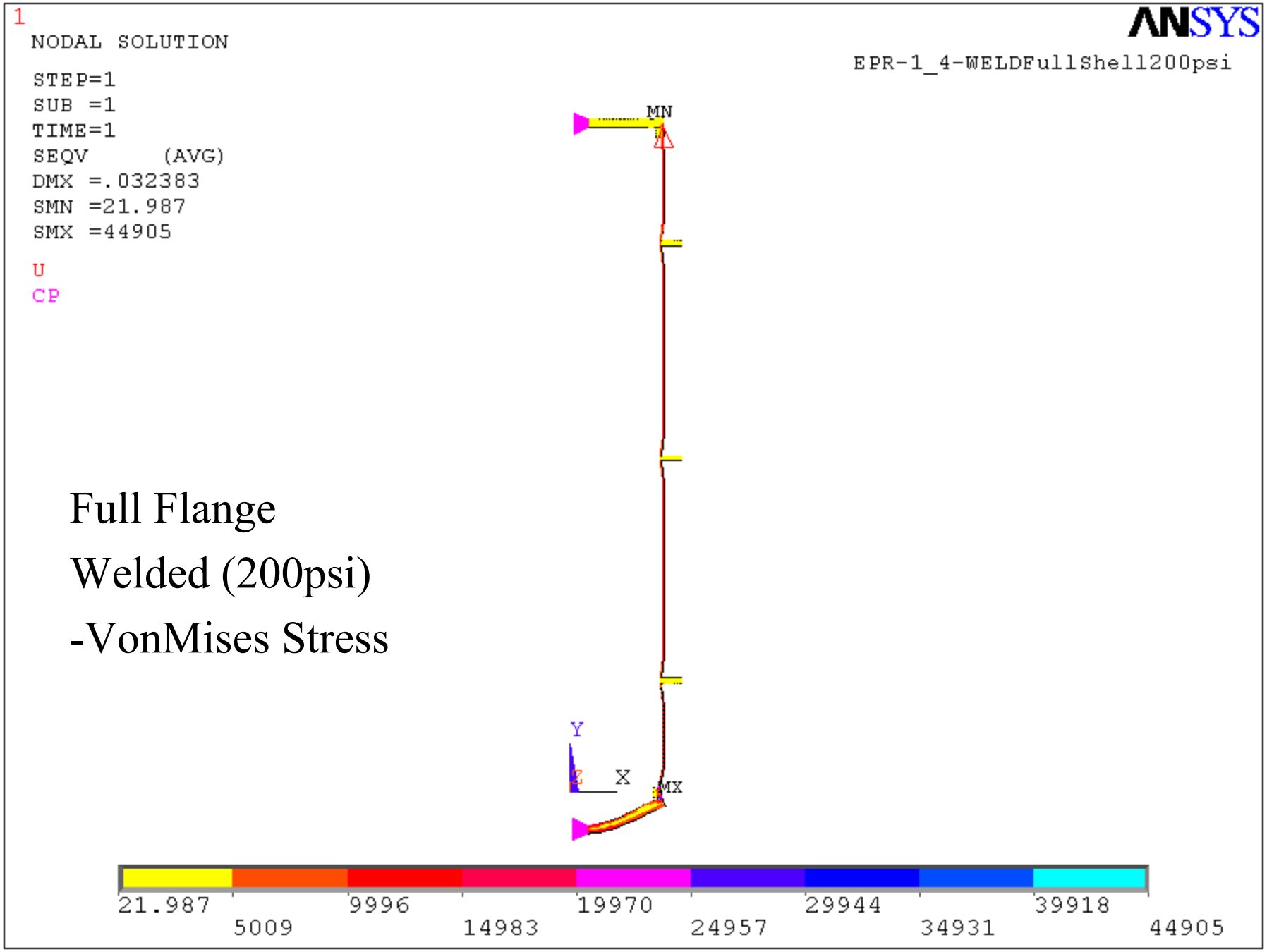

Full Flange

Welded (200psi)

-VonMises Stress

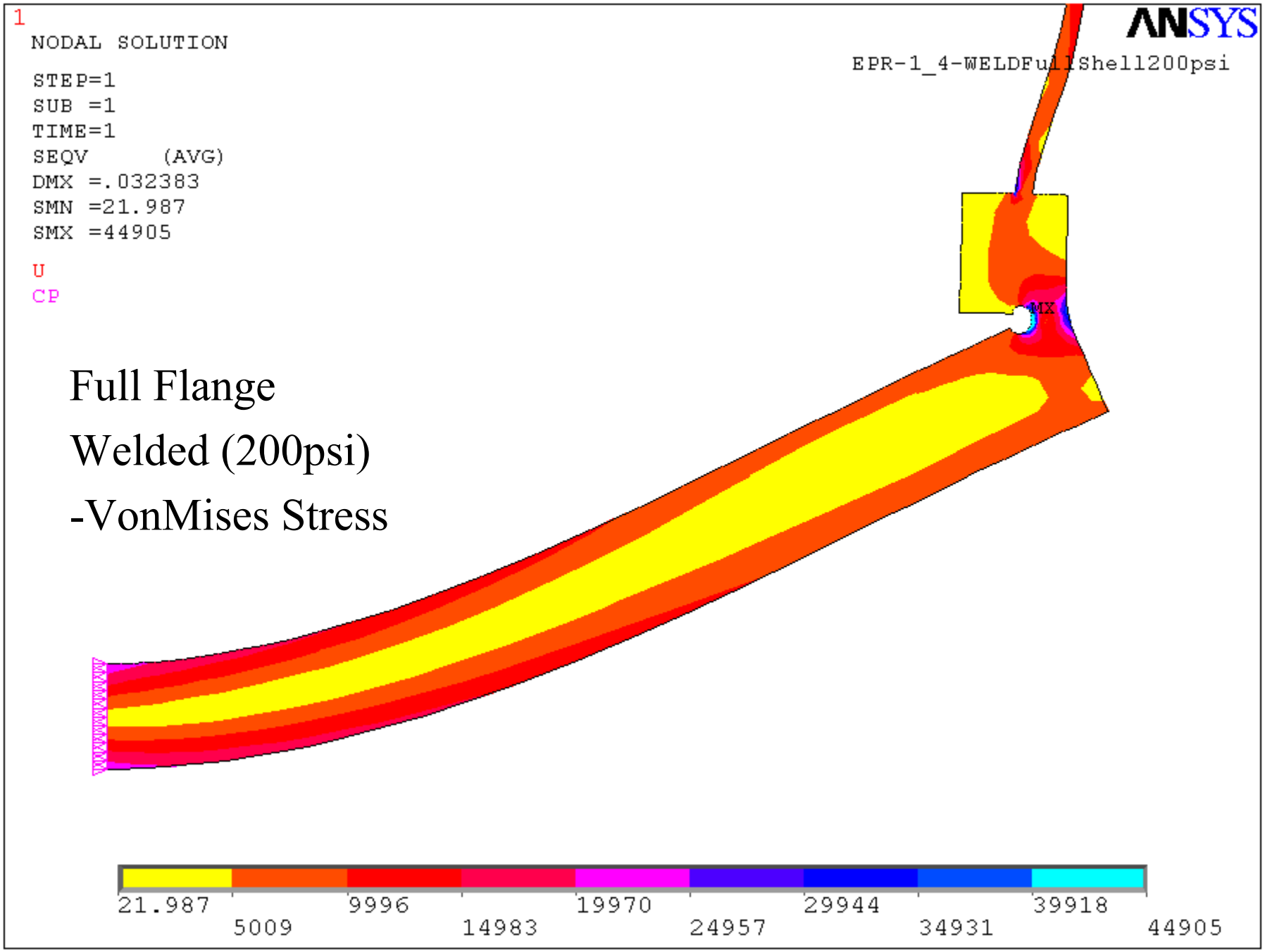
1
NODAL SOLUTION
STEP=1
SUB =1
TIME=1
SEQV (AVG)
DMX =.032383
SMN =21.987
SMX =44905
U
CP
ANSYS
EPR-1_4-WELDFullShell200psi
MX
Full Flange
Welded (200psi)
-VonMises Stress
21.987
5009
9996
14983
19970
24957
29944
34931
39918
44905

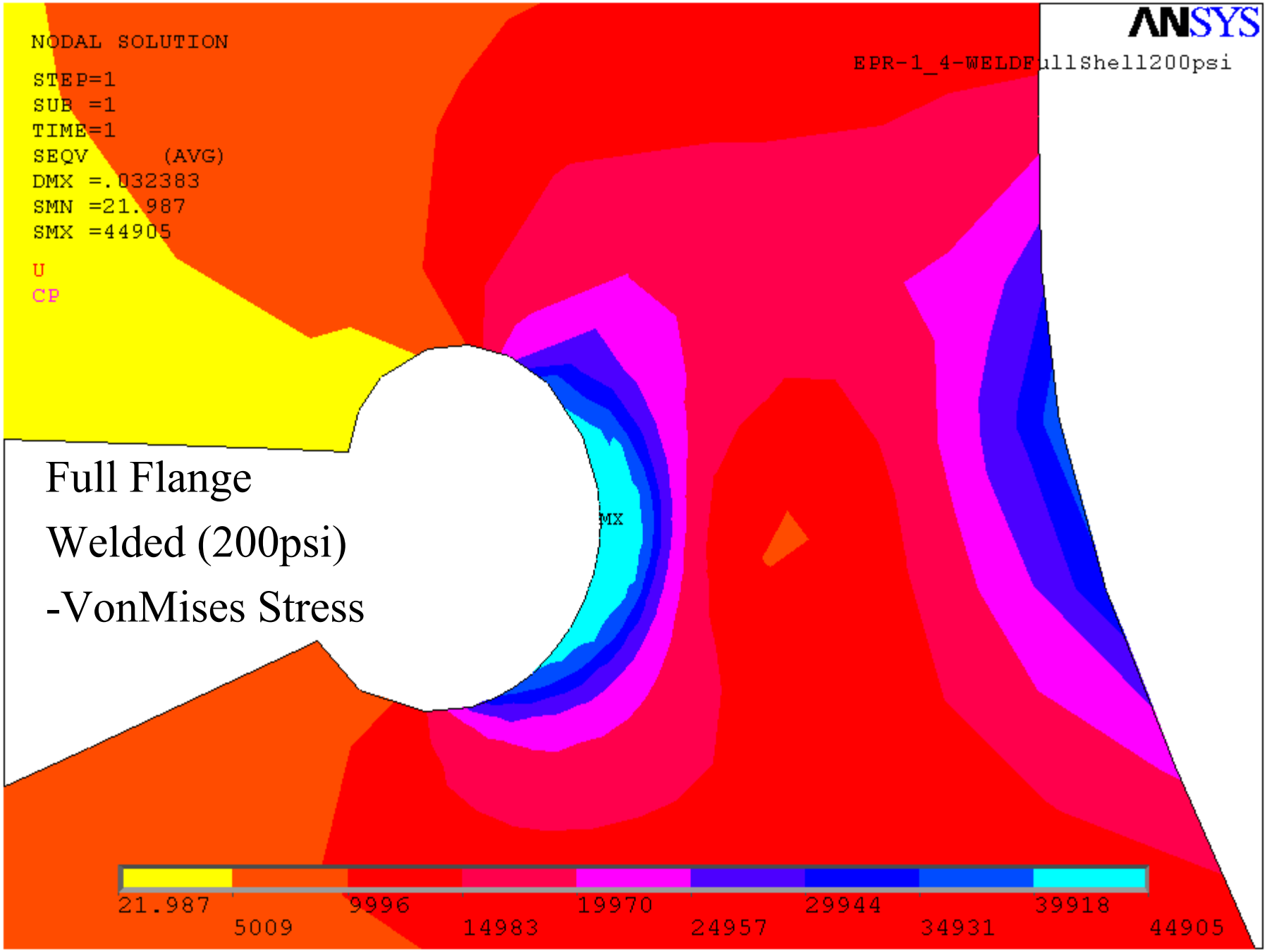

Full Flange
Welded (200psi)
-VonMises Stress

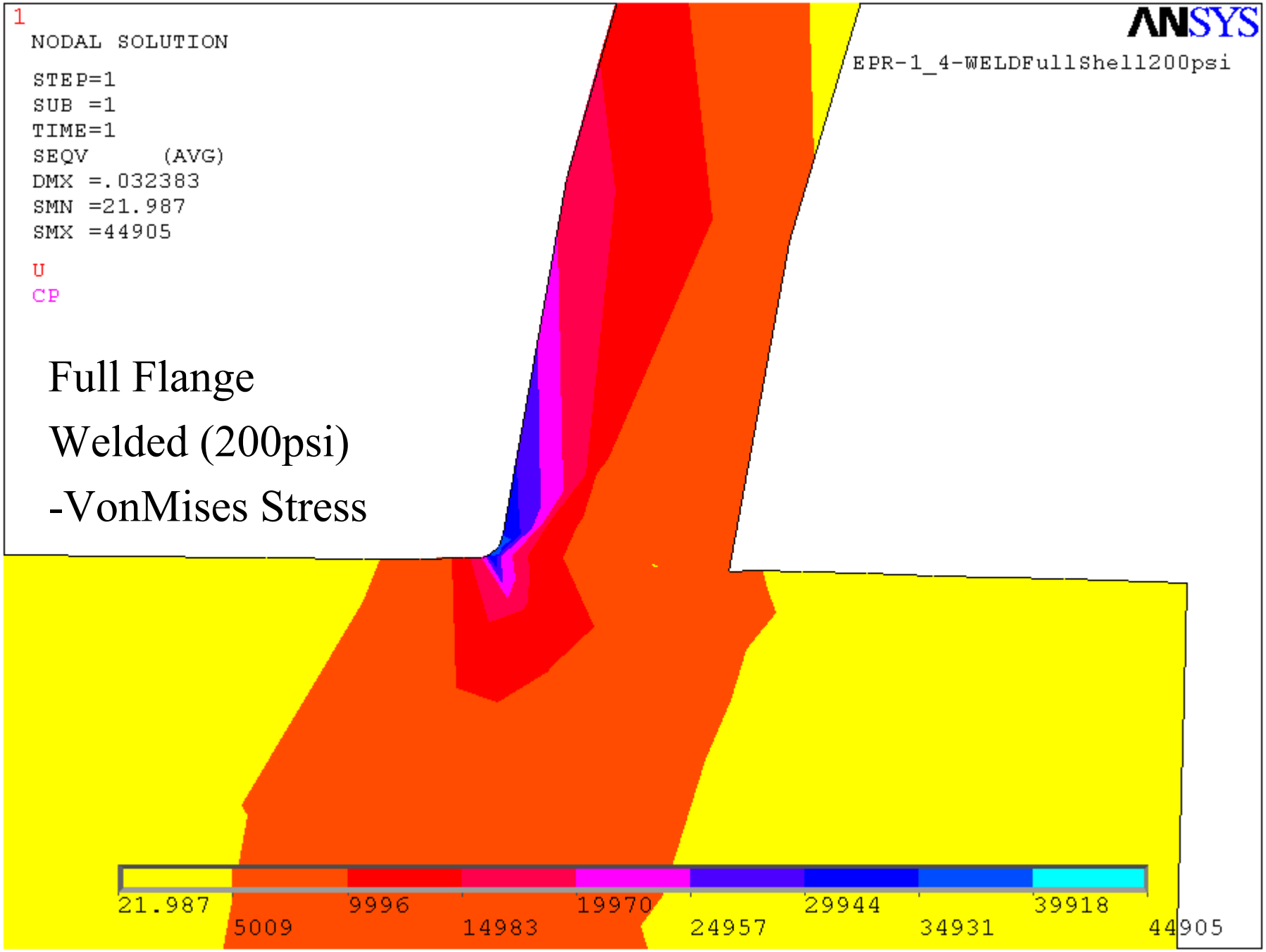
1
NODAL SOLUTION
STEP=1
SUB =1
TIME=1
SEQV (AVG)
DMX =.032383
SMN =21.987
SMX =44905
U
CP
ANSYS
EPR-1_4-WELDFullShell200psi
Full Flange
Welded (200psi)
-VonMises Stress
21.987
5009
9996
14983
19970
24957
29944
34931
39918
44905

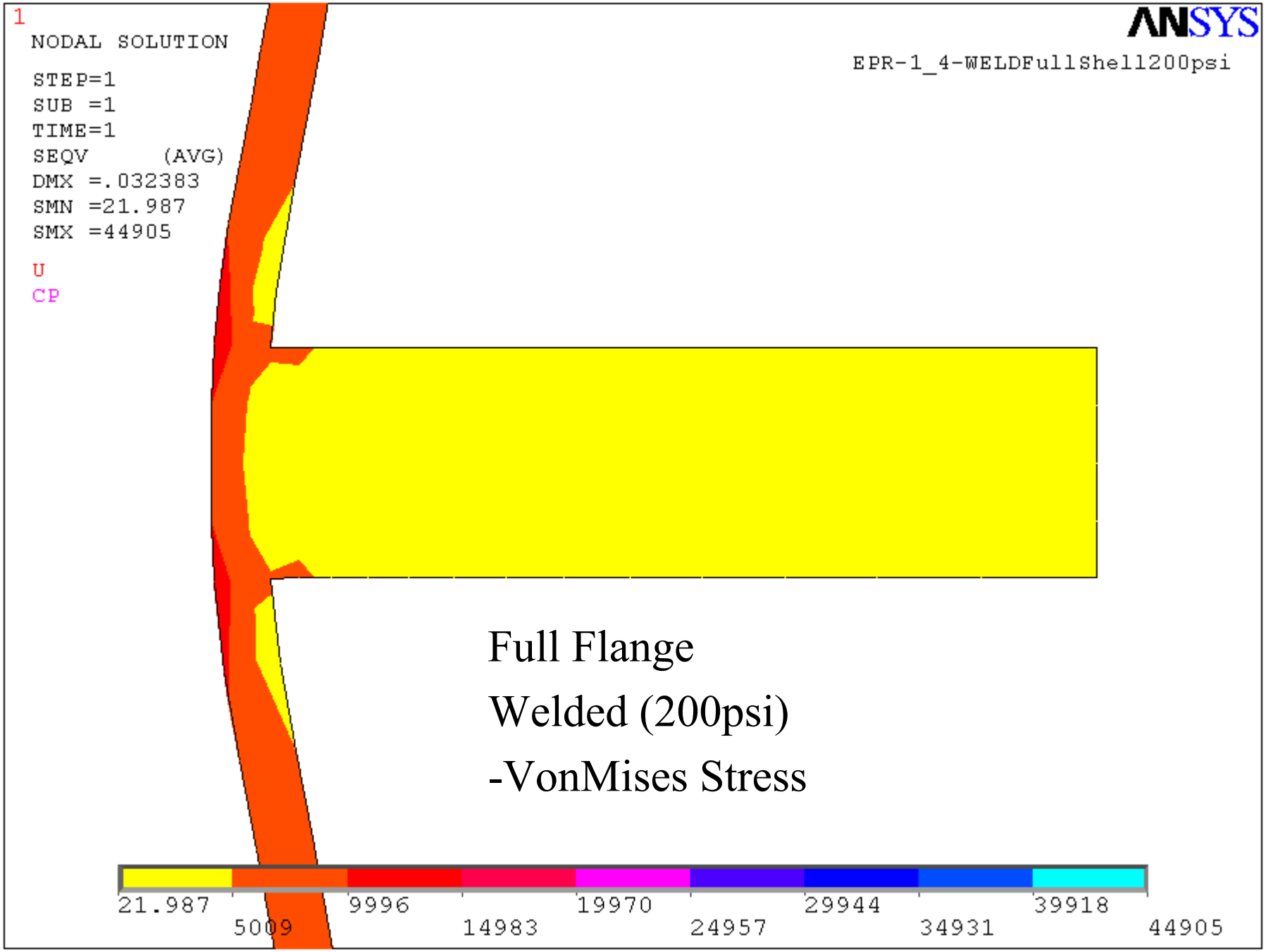
1
NODAL SOLUTION
STEP=1
SUB =1
TIME=1
SEQV (AVG)
DMX =.032383
SMN =21.987
SMX =44905
U
CP
ANSYS
EPR-1_4-WELDFullShell200psi
Full Flange
Welded (200psi)
-VonMises Stress
21.987
5009
9996
14983
19970
24957
29944
34931
39918
44905

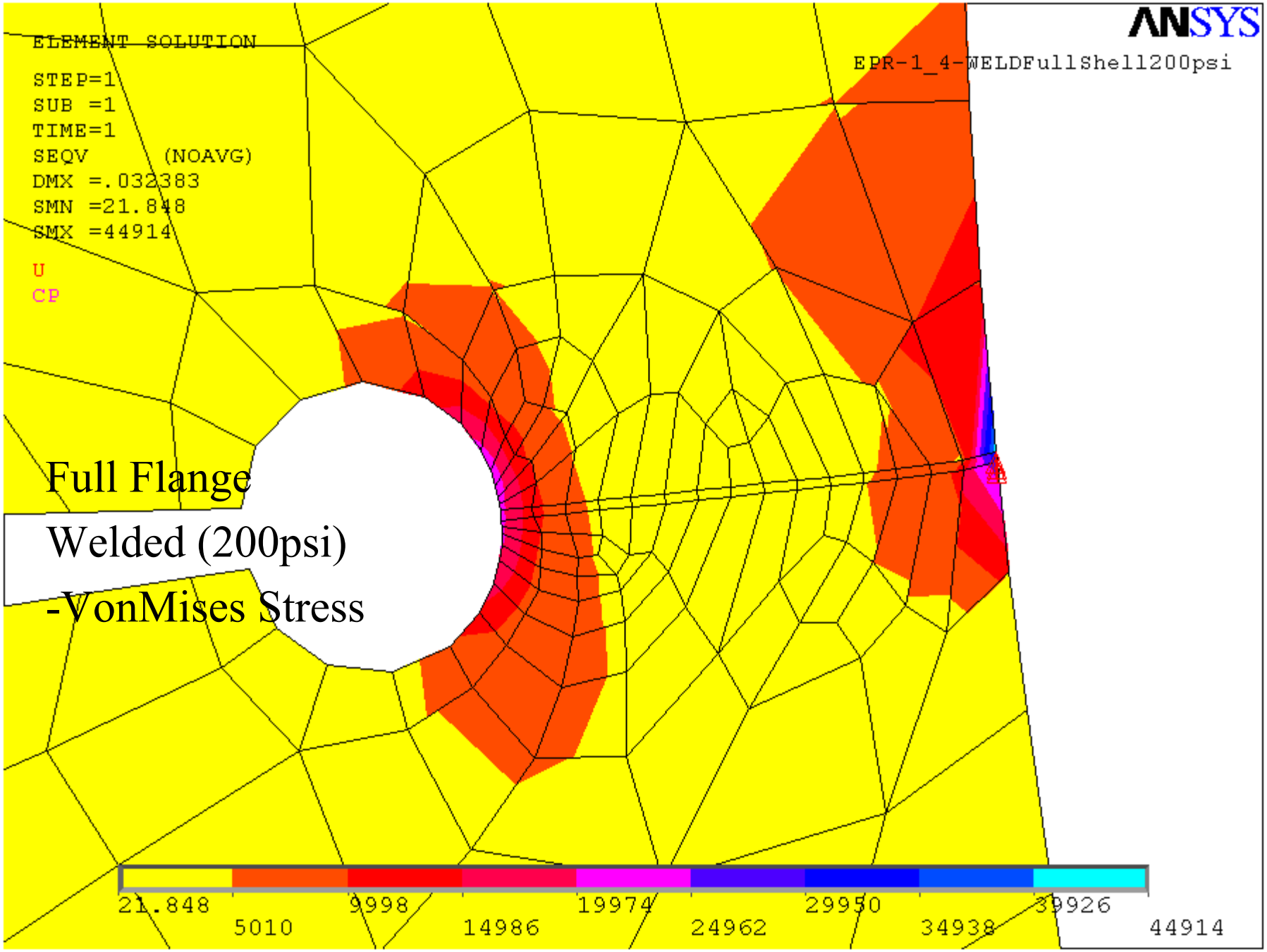

Full Flange
Welded (200psi)
-VonMises Stress

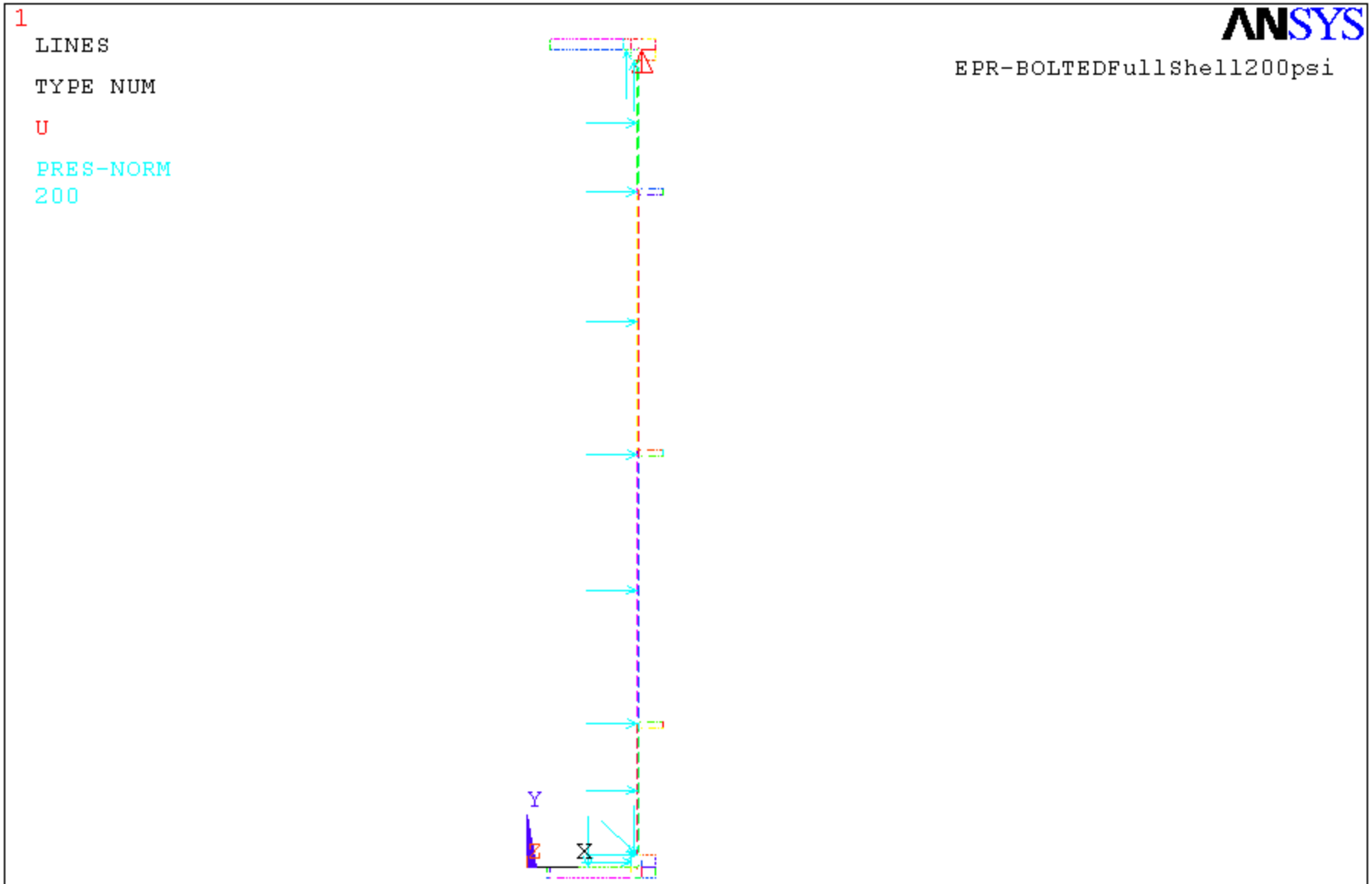

Full Shell – relief bolted

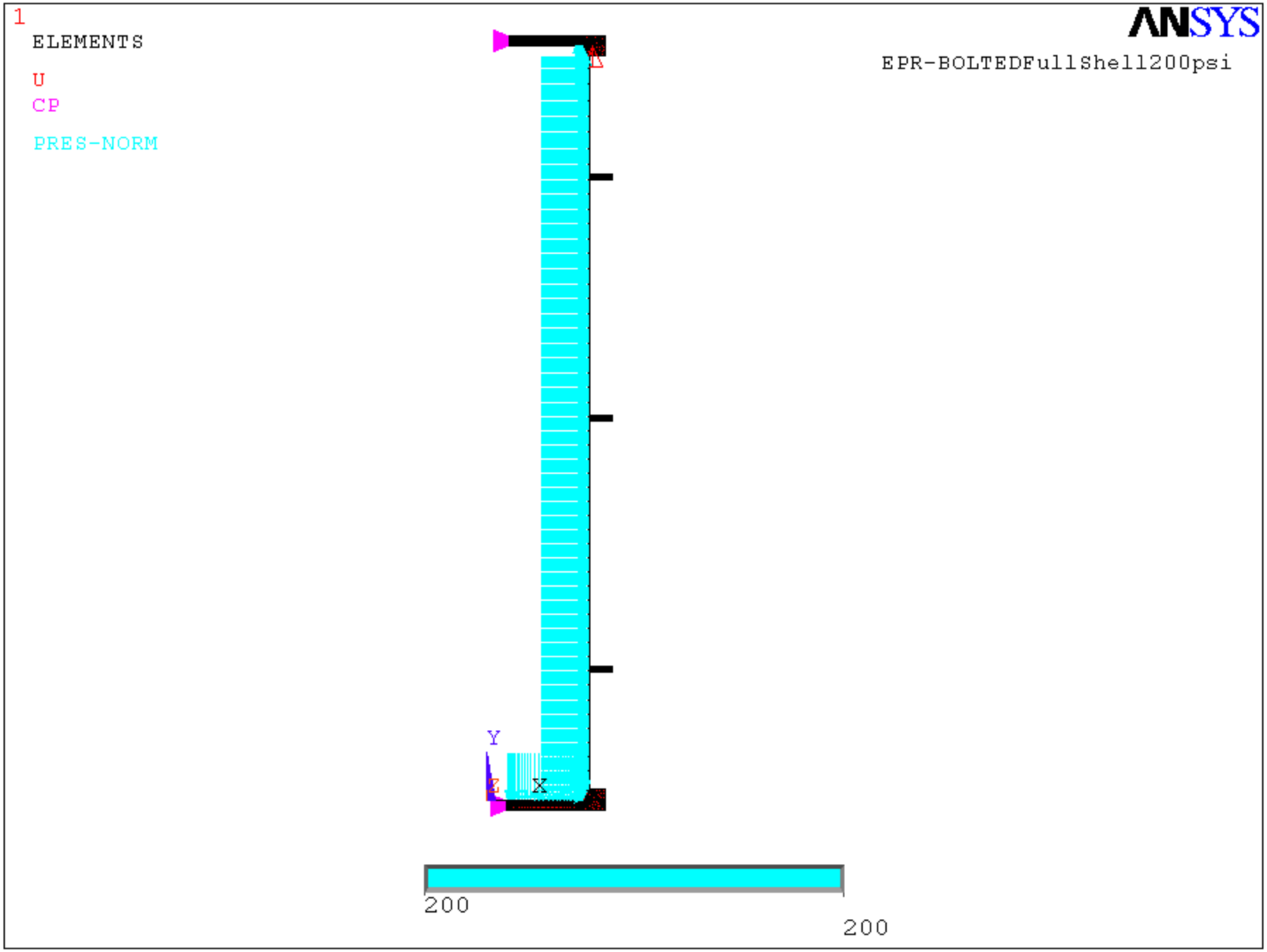
1
ELEMENTS
U
CP
PRES-NORM
ANSYS
EPR-BOLTEDFullShell200psi
Y
Z
X
200
200

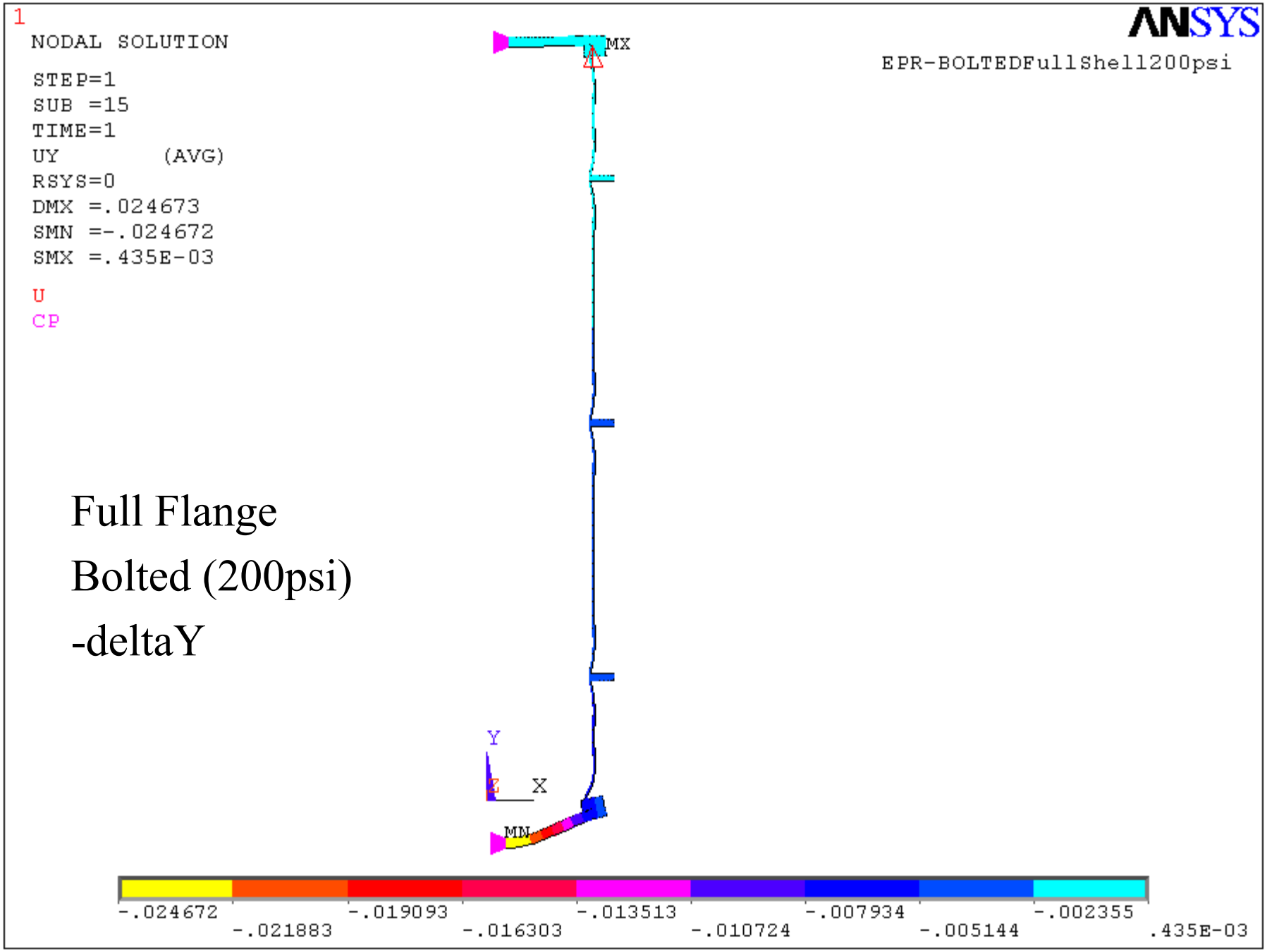

Full Flange

Bolted (200psi)

-deltaY

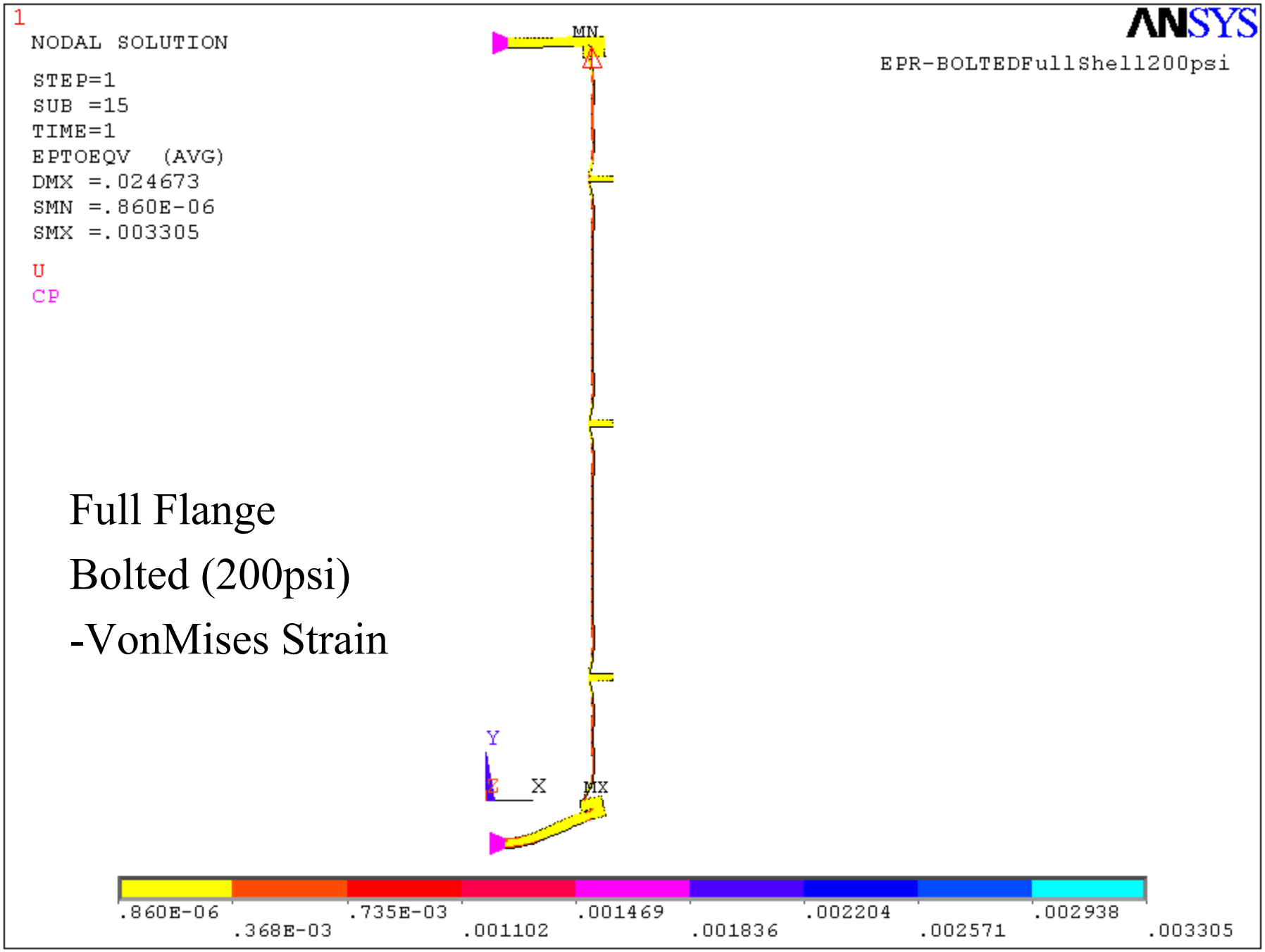

Full Flange

Bolted (200psi)

-VonMises Strain

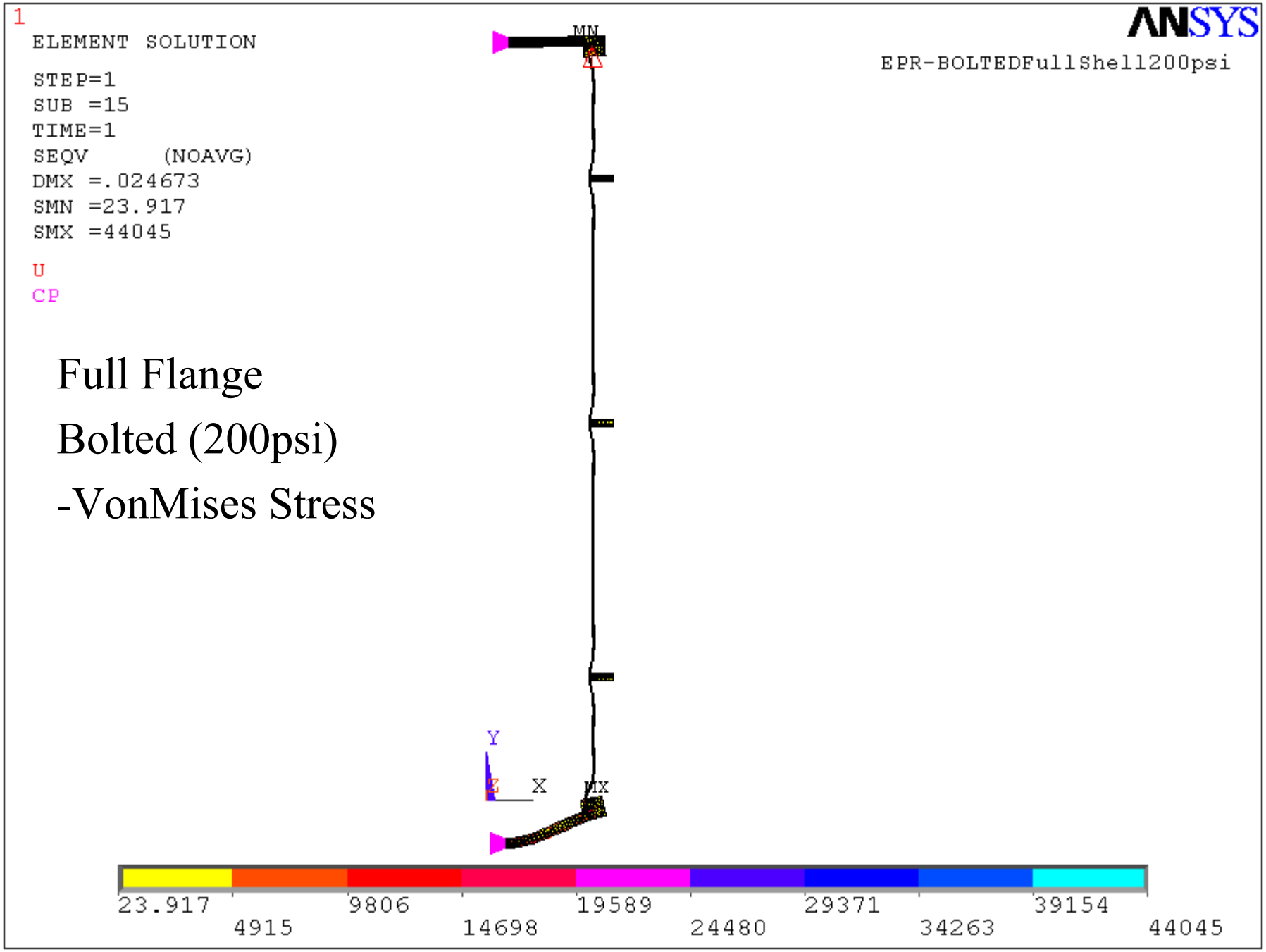

Full Flange

Bolted (200psi)

-VonMises Stress

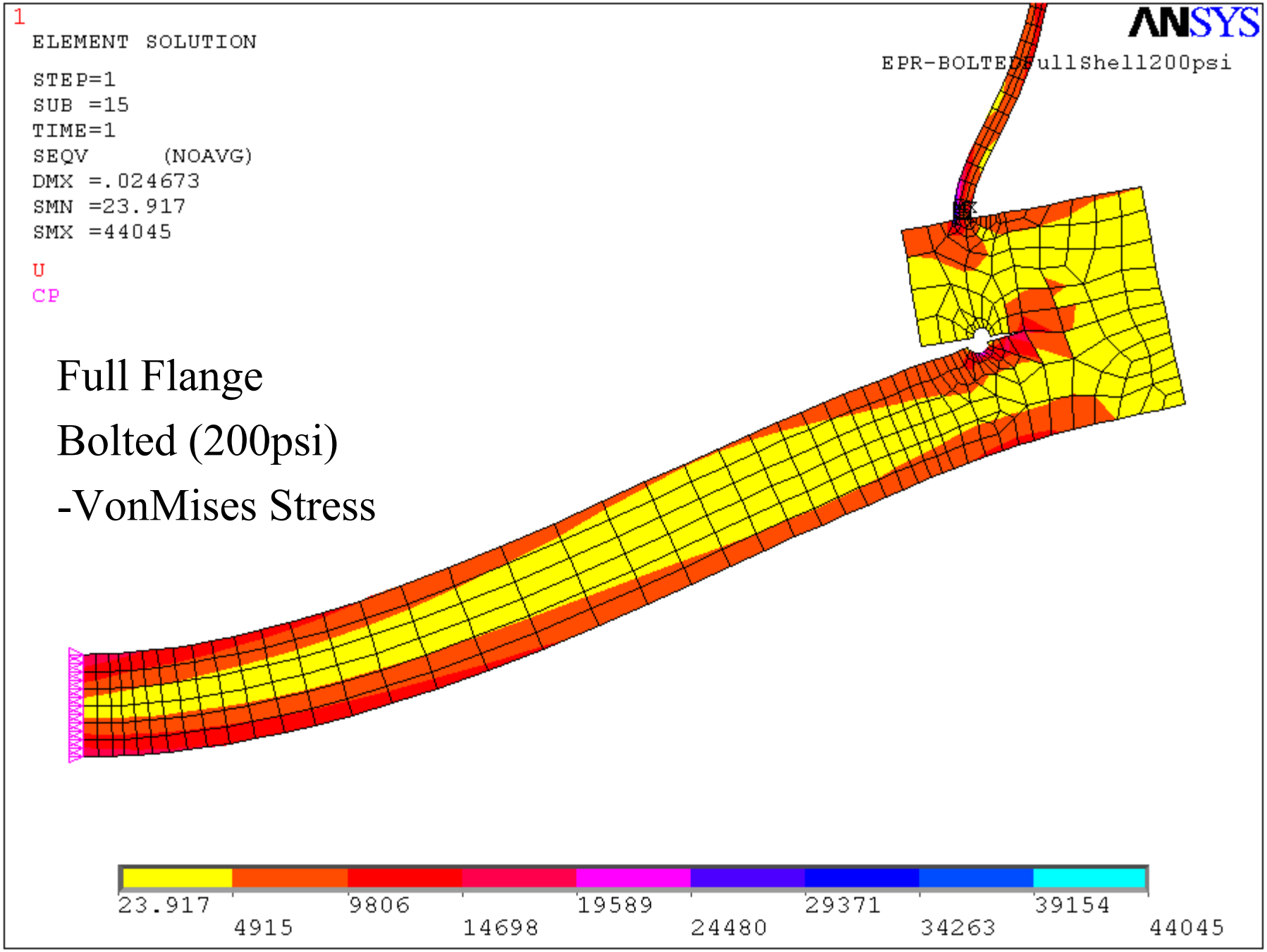

Full Flange

Bolted (200psi)

-VonMises Stress

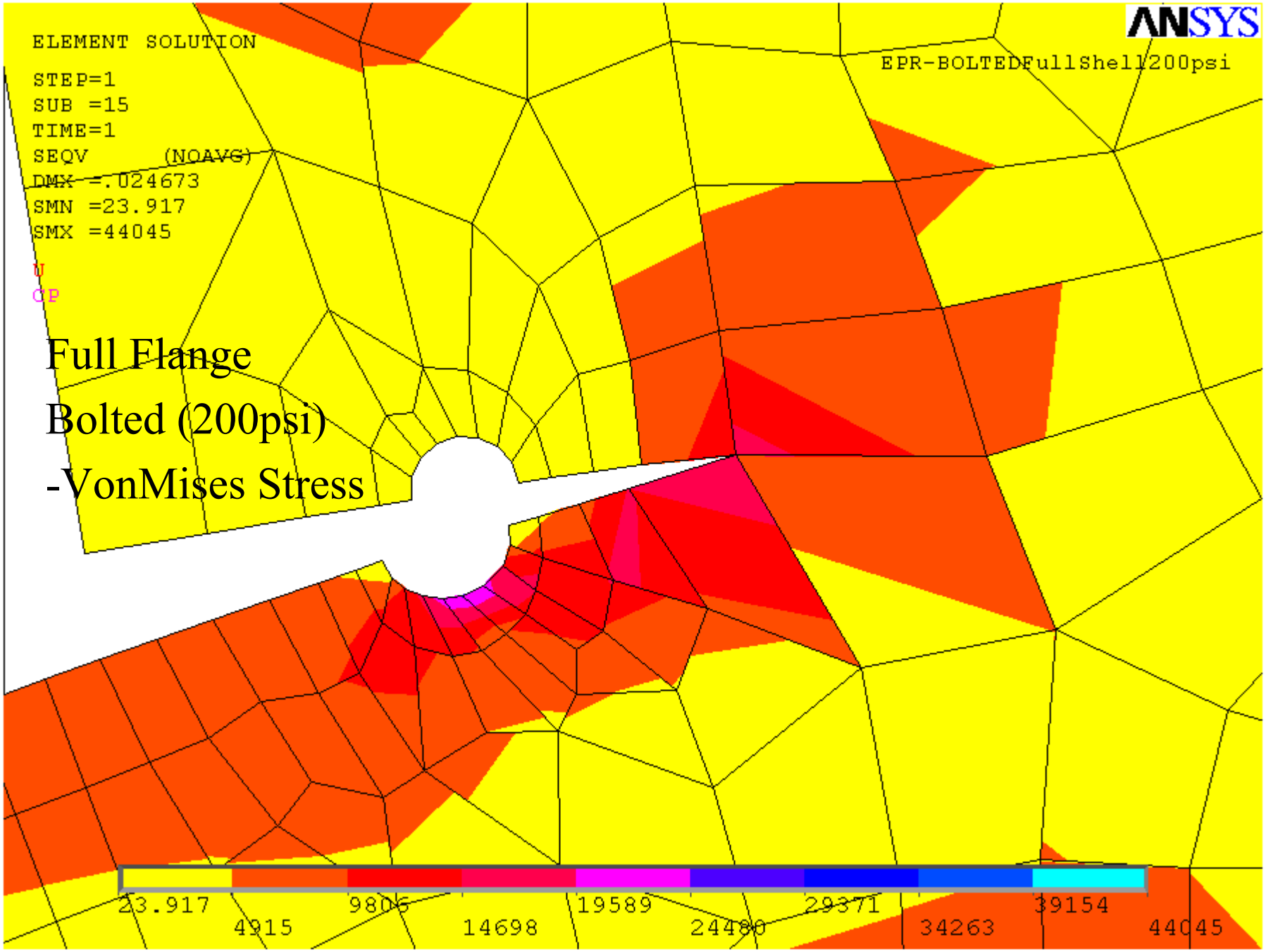

Full Flange

Bolted (200psi)

-VonMises Stress

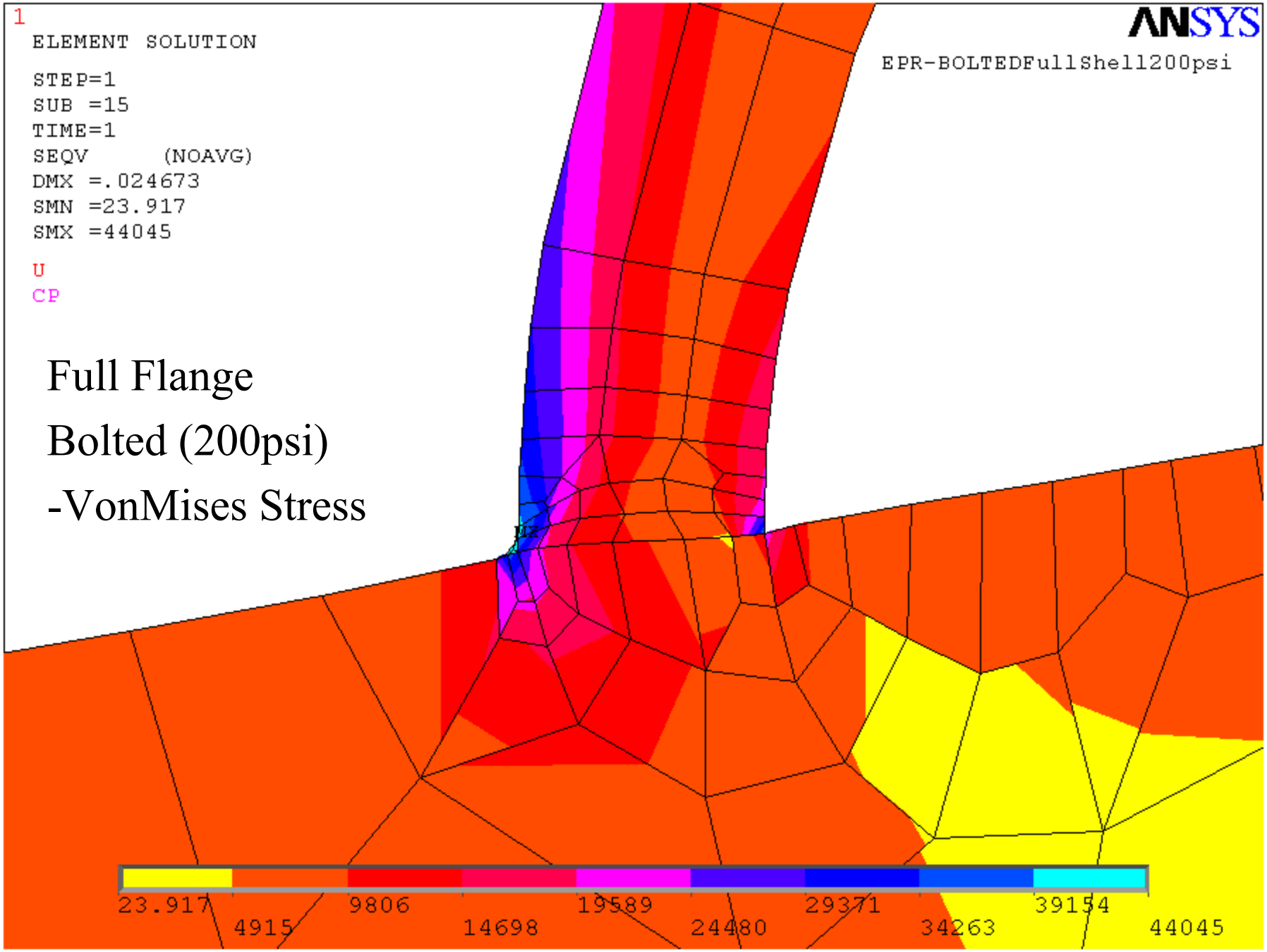
1
ELEMENT SOLUTION
STEP=1
SUB =15
TIME=1
SEQV (NOAVG)
DMX =.024673
SMN =23.917
SMX =44045
U
CP
ANSYS
EPR-BOLTEDFullShell200psi
Full Flange
Bolted (200psi)
-VonMises Stress
23.917
4915
9806
14698
19589
24480
29371
34263
39154
44045

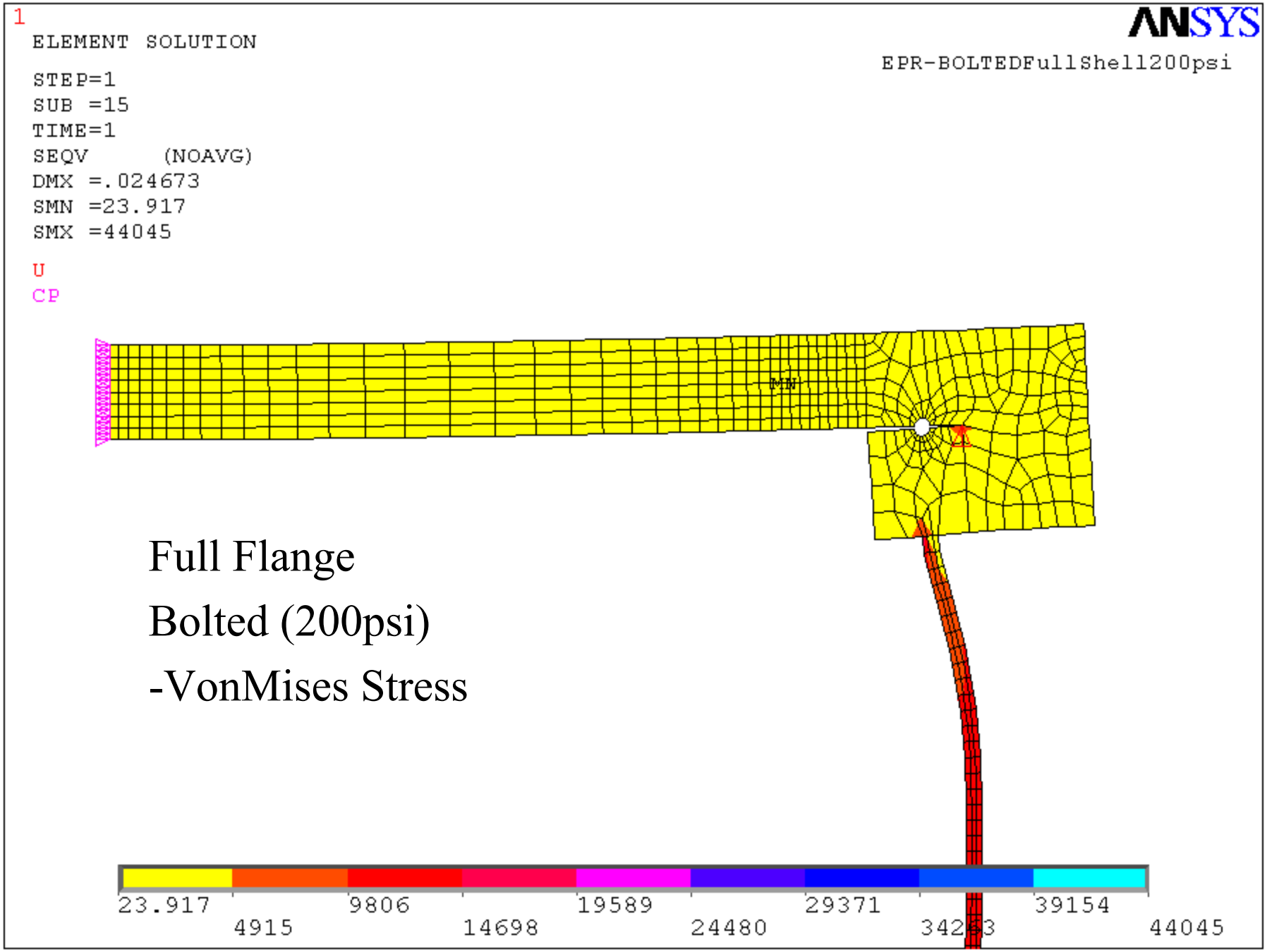

Full Flange

Bolted (200psi)

-VonMises Stress

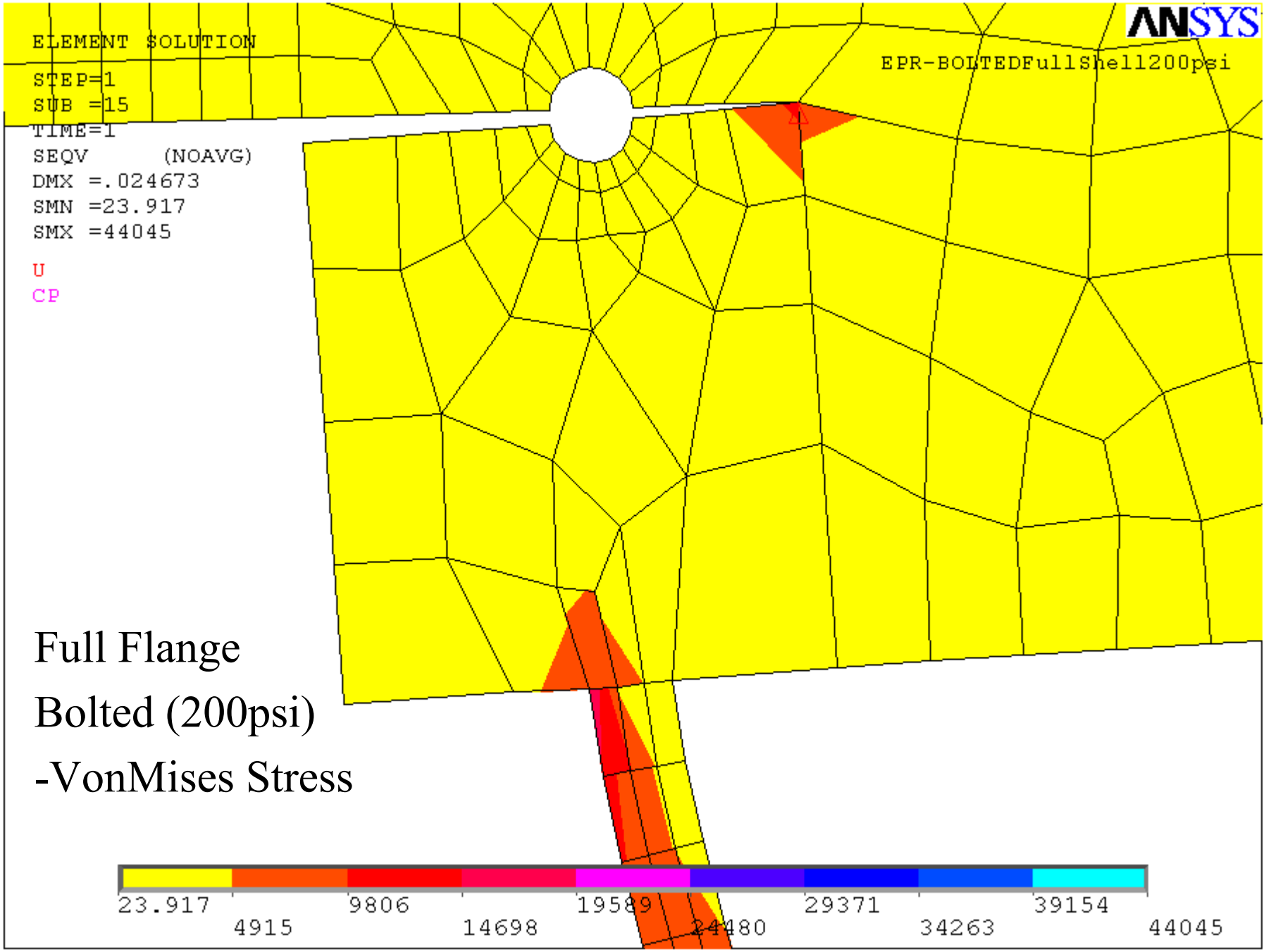

Full Flange
Bolted (200psi)
-VonMises Stress

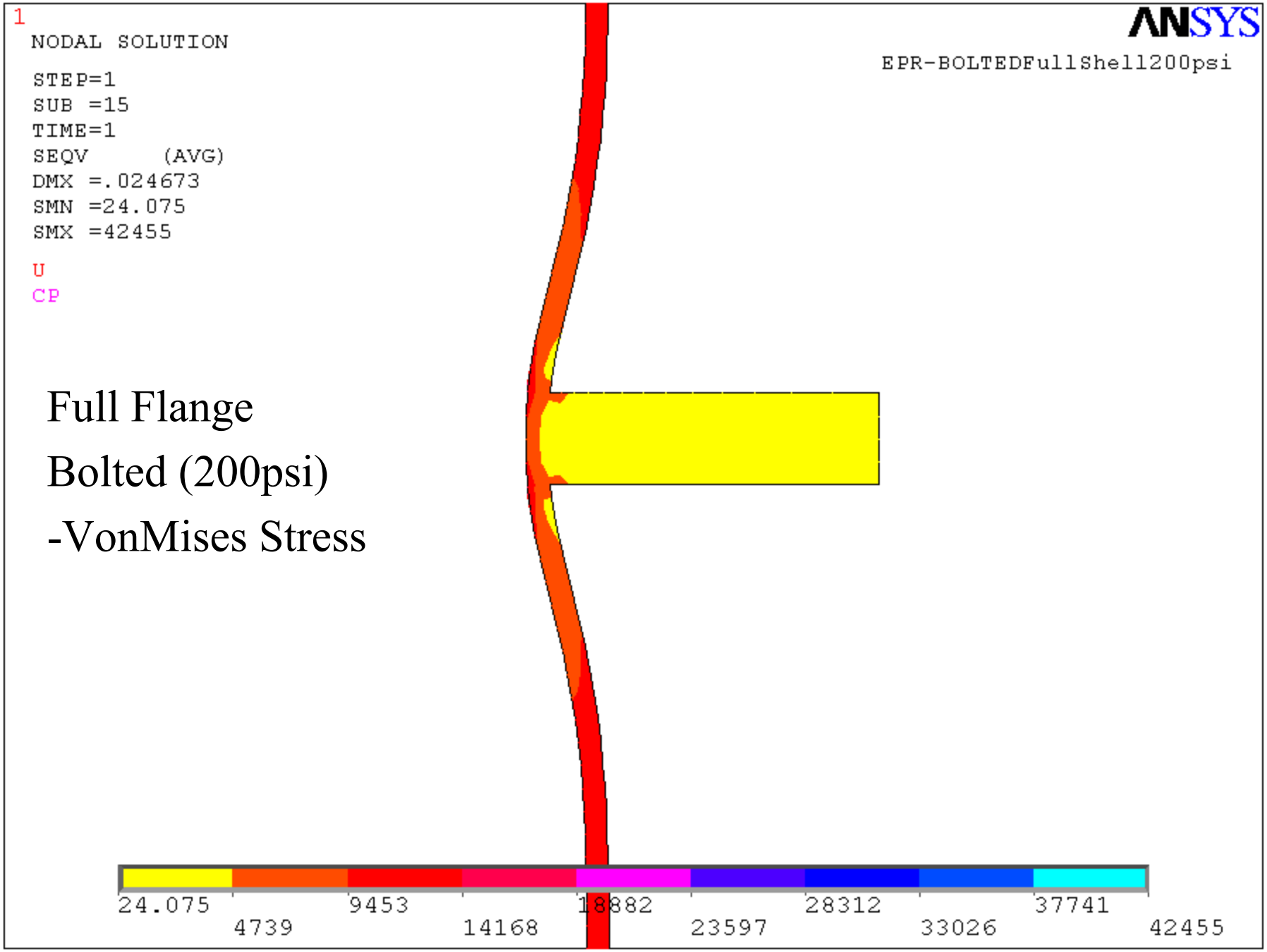
1
NODAL SOLUTION
STEP=1
SUB =15
TIME=1
SEQV (AVG)
DMX =.024673
SMN =24.075
SMX =42455
U
CP
ANSYS
EPR-BOLTEDFullShell200psi
Full Flange
Bolted (200psi)
-VonMises Stress
24.075
4739
9453
14168
18882
23597
28312
33026
37741
42455

INTERACTIVE TABLE

TABLE 1B (CONT'D)
SECTION I; SECTION III, CLASS 2 AND 3;* SECTION VIII, DIVISION 1; AND SECTION XII
MAXIMUM ALLOWABLE STRESS VALUES *S* FOR NONFERROUS MATERIALS
(*See Maximum Temperature Limits for Restrictions on Class)

	Line No.	Nominal Composition	Product Form	Spec No.	Type/Grade	Alloy Designation/ UNS No.	Class/Condition/ Temper
	1	...	Smls. extr. tube	SB-241	...	A96061	T4
	2	...	Smls. extr. tube	SB-241	...	A96061	T6
	3	...	Smls. extr. tube	SB-241	...	A96061	T4 wld.
	4	...	Smls. extr. tube	SB-241	...	A96061	T6 wld.
	5	...	Smls. pipe	SB-241	...	A96061	T6
	6	...	Smls. pipe	SB-241	...	A96061	T6
	7	...	Smls. pipe	SB-241	...	A96061	T6 wld.
	8	...	Die forgings	SB-247	...	A96061	T6
	9	...	Hand forgings	SB-247	...	A96061	T6
	10	...	Hand forgings	SB-247	...	A96061	T6
	11	...	Die & hand forgings	SB-247	...	A96061	T6 wld.
	12	...	Shapes	SB-308	...	A96061	T6
	13	...	Shapes	SB-308	...	A96061	T6 wld.
	14	...	Drawn smls. tube	SB-210	...	A96063	T6
	15	...	Drawn smls. tube	SB-210	...	A96063	T6 wld.
	16	...	Bar, rod, shapes	SB-221	...	A96063	T1
	17	...	Bar, rod, shapes	SB-221	...	A96063	T1
	18	...	Bar, rod, shapes	SB-221	...	A96063	T5
	19	...	Bar, rod, shapes	SB-221	...	A96063	T5
	20	...	Bar, rod, shapes	SB-221	...	A96063	T6
	21	...	Bar, rod, shapes	SB-221	...	A96063	T5 wld.
	22	...	Bar, rod, shapes	SB-221	...	A96063	T6 wld.
	23	...	Smls. extr. tube	SB-241	...	A96063	T1
	24	...	Smls. extr. tube	SB-241	...	A96063	T1
	25	...	Smls. extr. tube	SB-241	...	A96063	T5
	26	...	Smls. extr. tube	SB-241	...	A96063	T5
	27	...	Smls. extr. tube	SB-241	...	A96063	T6
	28	...	Smls. extr. tube	SB-241	...	A96063	T5 wld.
	29	...	Smls. extr. tube	SB-241	...	A96063	T6 wld.
	30	...	Smls. pipe	SB-241	...	A96063	T6
	31	...	Smls. pipe	SB-241	...	A96063	T6 wld.
A05	32	...	Rod	SB-187	...	C10200	O60
04	33	...	Smls. tube	SB-75	...	C10200	O60
A05 04	34	...	Smls. pipe	SB-42	...	C10200	O61
	35	...	Plate, sheet, strip	SB-152	...	C10200	O25

ASME – Cu

INTERACTIVE TABLE

TABLE 1B (CONT'D)
SECTION I; SECTION III, CLASS 2 AND 3;* SECTION VIII, DIVISION 1; AND SECTION XII
MAXIMUM ALLOWABLE STRESS VALUES *S* FOR NONFERROUS MATERIALS
(*See Maximum Temperature Limits for Restrictions on Class)

Line No.	Size/ Thickness, in.	P-No.	Min. Tensile Strength, ksi	Min. Yield Strength, ksi	Applicability and Max. Temperature Limits (NP = Not Permitted) (SPT = Supports Only) I	III	VIII-1	XII	External Pressure Chart No.	Notes	
1	..	23	26	14	NP	400 (CL 3 only)	400	400	NFA-13	G24, T3, W4	
2	..	23	38	20	NP	400 (CL 3 only)	400	400	NFA-13,23	G24, T3, W4	
3	..	23	24	..	NP	400 (CL 3 only)	400	400	NFA-13	G24, T3, W7	
4	..	23	24	..	NP	400 (CL 3 only)	400	400	NFA-13,23	G24, T3, W7	
5	≤ 1.000	23	42	20	NP	400 (CL 3 only)	400	400	NFA-13,23	T3, W4	
6	≥ 1.000	23	38	20	NP	400 (CL 3 only)	400	400	NFA-13,23	T3, W4	
7	..	23	24	..	NP	400 (CL 3 only)	400	400	NFA-13,23	T3, W7	
8	≤ 4.000	23	38	20	NP	400 (CL 3 only)	400	400	NFA-13,23	T3, W4	
9	≤ 4.000	23	37	20	NP	400 (CL 3 only)	400	400	NFA-13,23	T3, W4	
10	4.000 – 8.000	23	33	32	NP	400 (CL 3 only)	400	400	NFA-13,23	T3, W4	
11	≤ 8.000	23	24	..	NP	400 (CL 3 only)	400	400	NFA-13,23	T3, W7	
12	..	23	38	20	NP	400 (CL 3 only)	400	400	NFA-13,23	T3, W4	
13	..	23	24	..	NP	400 (CL 3 only)	400	400	NFA-13,23	G13, T3, W7	
14	0.020 – 0.500	23	33	28	NP	400 (CL 3 only)	400	400	NFA-1	T3, W4	
15	0.020 – 0.500	23	17	..	NP	400 (CL 3 only)	400	400	NFA-1	T3, W7	
16	≤ 0.500	23	17	9	NP	300 (CL 3 only)	400	400	NFA-1	T3, W4	
17	0.500 – 1.000	23	16	8	NP	300 (CL 3 only)	400	400	NFA-1	T3, W4	
18	≤ 0.500	23	22	14	NP	400 (CL 3 only)	400	400	NFA-1	T3, W4	
19	0.500 – 1.000	23	21	13	NP	400 (CL 3 only)	400	400	NFA-1	T3, W4	
20	≤ 1.000	23	30	25	NP	400 (CL 3 only)	400	400	NFA-1	T3, W4	
21	≤ 1.000	23	17	..	NP	400 (CL 3 only)	400	400	NFA-1	T3, W7	
22	≤ 1.000	23	17	..	NP	400 (CL 3 only)	400	400	NFA-1	T3, W7	
23	≤ 0.500	23	17	9	NP	300 (CL 3 only)	NP	NP	NFA-1	T3, W4	
24	0.500 – 1.000	23	16	8	NP	300 (CL 3 only)	NP	NP	NFA-1	T3, W4	
25	≤ 0.500	23	22	16	NP	300 (CL 3 only)	400	400	NFA-1	T3, W4	
26	0.500 – 1.000	23	21	15	NP	300 (CL 3 only)	400	400	NFA-1	T3, W4	
27	≤ 1.000	23	30	25	NP	300 (CL 3 only)	400	400	NFA-1	T3, W4	
28	≤ 1.000	23	17	..	NP	300 (CL 3 only)	400	400	NFA-1	T3, W7	
29	≤ 1.000	23	17	..	NP	300 (CL 3 only)	400	400	NFA-1	T3, W7	
30	..	23	30	25	NP	400 (CL 3 only)	400	400	NFA-1	T3, W4	
31	..	23	17	..	NP	400 (CL 3 only)	400	400	NFA-1	T3, W7	
32	..	31	28	8	NP	300	400	400	NFC-1	T3	A06
33	..	31	30	9	400	300 (CL 3 only)	400	400	NFC-1	G1, T3, W10	04
34	..	31	30	9	400	300	400	400	NFC-1	G1, T3, W10	04 A07
35	..	31	30	10	NP	300 (CL 3 only)	400	400	NFC-1	T2	

INTERACTIVE TABLE

TABLE 1B (CONT'D)
SECTION I; SECTION III, CLASS 2 AND 3;* SECTION VIII, DIVISION 1; AND SECTION XII
MAXIMUM ALLOWABLE STRESS VALUES *S* FOR NONFERROUS MATERIALS
(*See Maximum Temperature Limits for Restrictions on Class)

	Line No.	Maximum Allowable Stress, ksi (Multiply by 1000 to Obtain psi), for Metal Temperature, °F, Not Exceeding																	
		−20 to 100	150	200	250	300	350	400	450	500	550	600	650	700	750	800	850	900	950
	1	7.4	7.4	7.4	6.4	6.0	5.6	4.5	...	...	...	...	...	...	...	...	...	...	...
	2	10.9	10.9	10.9	9.1	7.9	6.3	4.5	...	...	...	...	...	...	...	...	...	...	...
	3	6.0	6.0	6.0	5.9	5.5	4.6	3.5	...	...	...	...	...	...	...	...	...	...	...
	4	6.0	6.0	6.0	5.9	5.5	4.6	3.5	...	...	...	...	...	...	...	...	...	...	...
	5	12.0	12.0	12.0	9.9	8.4	6.3	4.5	...	...	...	...	...	...	...	...	...	...	...
	6	10.9	10.9	10.9	9.1	7.9	6.3	4.5	...	...	...	...	...	...	...	...	...	...	...
	7	6.0	6.0	6.0	5.9	5.5	4.6	3.5	...	...	...	...	...	...	...	...	...	...	...
	8	10.9	10.9	10.9	9.1	7.9	6.3	4.5	...	...	...	...	...	...	...	...	...	...	...
	9	10.6	10.6	10.6	8.8	7.7	6.3	4.5	...	...	...	...	...	...	...	...	...	...	...
	10	10.0	10.0	10.0	8.4	7.4	6.1	4.5	...	...	...	...	...	...	...	...	...	...	...
	11	6.0	6.0	6.0	5.9	5.5	4.6	3.5	...	...	...	...	...	...	...	...	...	...	...
	12	10.9	10.9	10.9	8.5	7.2	5.6	4.0	...	...	...	...	...	...	...	...	...	...	...
	13	6.0	5.9	5.7	5.4	5.0	4.2	3.2	...	...	...	...	...	...	...	...	...	...	...
	14	9.4	9.4	9.4	7.4	5.5	3.4	2.0	...	...	...	...	...	...	...	...	...	...	...
	15	4.3	4.3	4.3	4.2	3.9	3.0	2.0	...	...	...	...	...	...	...	...	...	...	...
	16	4.9	4.9	4.9	4.2	4.2	3.4	2.0	...	...	...	...	...	...	...	...	...	...	...
	17	4.6	4.6	4.6	4.0	4.0	3.4	2.0	...	...	...	...	...	...	...	...	...	...	...
	18	6.3	6.3	6.3	5.1	4.6	3.4	2.0	...	...	...	...	...	...	...	...	...	...	...
	19	6.0	6.0	6.0	4.9	4.3	3.4	2.0	...	...	...	...	...	...	...	...	...	...	...
	20	8.6	8.6	8.6	6.8	5.0	3.4	2.0	...	...	...	...	...	...	...	...	...	...	...
	21	4.3	4.3	4.3	4.2	3.9	3.0	2.0	...	...	...	...	...	...	...	...	...	...	...
	22	4.3	4.3	4.3	4.2	3.9	3.0	2.0	...	...	...	...	...	...	...	...	...	...	...
	23	4.9	4.9	4.9	4.2	4.2	3.4	...	...	...	...	...	...	...	...	...	...	...	...
	24	4.6	4.6	4.6	4.0	4.0	3.4	...	...	...	...	...	...	...	...	...	...	...	...
	25	6.3	6.3	6.3	5.1	4.6	3.4	2.0	...	...	...	...	...	...	...	...	...	...	...
	26	6.0	6.0	6.0	4.9	4.4	3.4	2.0	...	...	...	...	...	...	...	...	...	...	...
	27	8.6	8.6	8.6	6.8	5.0	3.4	2.0	...	...	...	...	...	...	...	...	...	...	...
	28	4.3	4.3	4.3	4.2	3.9	3.0	2.0	...	...	...	...	...	...	...	...	...	...	...
	29	4.3	4.3	4.3	4.2	3.9	3.0	2.0	...	...	...	...	...	...	...	...	...	...	...
	30	8.6	8.6	8.6	6.8	5.0	3.4	2.0	...	...	...	...	...	...	...	...	...	...	...
	31	4.3	4.3	4.3	4.2	3.9	3.0	2.0	...	...	...	...	...	...	...	...	...	...	...
A05	32	5.3	4.5	4.3	4.2	4.0	4.0	3.0	...	...	...	...	...	...	...	...	...	...	...
04	33	6.0	5.1	4.9	4.8	4.7	4.0	3.0	...	...	...	...	...	...	...	...	...	...	...
A05 04	34	6.0	5.1	4.9	4.8	4.7	4.0	3.0	...	...	...	...	...	...	...	...	...	...	...
	35	6.7	5.6	5.4	5.3	5.0	4.0	3.0	...	...	...	...	...	...	...	...	...	...	...

INTERACTIVE TABLE

TABLE 1B (CONT'D)
SECTION I; SECTION III, CLASS 2 AND 3;* SECTION VIII, DIVISION 1; AND SECTION XII
MAXIMUM ALLOWABLE STRESS VALUES *S* FOR NONFERROUS MATERIALS
(*See Maximum Temperature Limits for Restrictions on Class)

	Line No.	Nominal Composition	Product Form	Spec No.	Type/Grade	Alloy Designation/ UNS No.	Class/Condition/ Temper
	1	...	Smls. pipe	SB-42	...	C10200	H55
	2	...	Smls. tube	SB-75	...	C10200	H55
	3	...	Smls. cond. tube	SB-111	...	C10200	H55
	4	...	Smls. U-bend tube	SB-395	...	C10200	H55
	5	...	Smls. pipe	SB-42	...	C10200	H80
	6	...	Smls. tube	SB-75	...	C10200	H80
	7	...	Smls. cond. tube	SB-111	...	C10200	H80
	8	...	Plate, sheet, strip	SB-152	...	C10400	O25
	9	...	Plate, sheet, strip	SB-152	...	C10500	O25
	10	...	Plate, sheet, strip	SB-152	...	C10700	O25
A05	11	...	Bar, rod	SB-187	...	C11000	O60
	12	...	Plate, sheet, strip, bar	SB-152	...	C11000	O25
	13	...	Smls. tube	SB-75	...	C12000	O60
04	14	...	Smls. tube	SB-75	...	C12000	O60
A05 04	15	...	Smls. pipe	SB-42	...	C12000	O61
	16	...	Smls. pipe	SB-42	...	C12000	H55
	17	...	Smls. tube	SB-75	...	C12000	H55
	18	...	Smls. cond. tube	SB-111	...	C12000	H55
	19	...	Smls. U-bend tube	SB-395	...	C12000	H55
	20	...	Smls. pipe	SB-42	...	C12000	H80
	21	...	Smls. tube	SB-75	...	C12000	H80
	22	...	Smls. cond. tube	SB-111	...	C12000	H80
	23	...	Smls. tube	SB-75	...	C12200	O60
04	24	...	Smls. tube	SB-75	...	C12200	O60
A05 04	25	...	Smls. pipe	SB-42	...	C12200	O61
A05	26	...	Finned tube	SB-359	...	C12200	O61
A05	27	...	Wld. cond. tube	SB-543	...	C12200	Annealed
	28	...	Plate, sheet, strip	SB-152	...	C12200	O25
A05	29	...	Wld. cond. tube	SB-543	...	C12200	Light cold worked
	30	...	Smls. pipe	SB-42	...	C12200	H55
	31	...	Smls. tube	SB-75	...	C12200	H55
	32	...	Smls. cond. tube	SB-111	...	C12200	H55
	33	...	Smls. U-bend tube	SB-395	...	C12200	H55
	34	...	Smls. pipe	SB-42	...	C12200	H80
	35	...	Smls. cond. tube	SB-75	...	C12200	H80
	36	...	Smls. tube	SB-111	...	C12200	H80
	37	...	Plate, sheet, strip, bar	SB-152	...	C12300	O25
	38	...	Plate, sheet	SB-152	...	C12500	O25

INTERACTIVE TABLE

TABLE 1B (CONT'D)
SECTION I; SECTION III, CLASS 2 AND 3;* SECTION VIII, DIVISION 1; AND SECTION XII
MAXIMUM ALLOWABLE STRESS VALUES *S* FOR NONFERROUS MATERIALS
(*See Maximum Temperature Limits for Restrictions on Class)

Line No.	Size/ Thickness, in.	P-No.	Min. Tensile Strength, ksi	Min. Yield Strength, ksi	Applicability and Max. Temperature Limits (NP = Not Permitted) (SPT = Supports Only) I	III	VIII-1	XII	External Pressure Chart No.	Notes	
1	2 < NPS ≤ 12	31	36	30	400	400	400	400	NFC-6	G1, W9, W10	
2	...	31	36	30	400	400 (Cl. 3 only)	400	400	NFC-6	G1, G9, W9, W10	
3	< 3	31	36	30	NP	400	400	400	NFC-6	G9, W9	
4	...	31	36	30	NP	400 (Cl. 3 only)	400	400	NFC-6	W9	
5	⅛ < NPS ≤ 2	31	45	40	400	300	400	400	NFC-6	G1, G5, G6, T4, W9, W10	
6	< 4	31	45	40	400	350	400	400	NFC-6	G1, G9, T4, W9, W10	
7	< 3	31	45	40	NP	300	400	400	NFC-6	G9, T4, W9	
8	...	31	30	10	NP	300	400	400	NFC-1	T2	
9	...	31	30	10	NP	300	400	400	NFC-1	T2	
10	...	31	30	10	NP	300	400	400	NFC-1	T2	
11	...	31	28	8	NP	300	400	400	NFC-1	T3	A05
12	≤ 2	31	30	10	NP	NP	400	400	NFC-1	T2	
13	...	31	30	9	NP	300 (Cl. 3 only)	NP	NP	NFC-1	...	
14	...	31	30	9	400	300 (Cl. 3 only)	400	400	NFC-1	G1, T3, W10	04
15	...	31	30	9	400	300	400	400	NFC-1	G1, T3, W10	04 A01
16	2 < NPS ≤ 12	31	36	30	400	400	400	400	NFC-6	G1, W9, W10	
17	...	31	36	30	400	400 (Cl. 3 only)	400	400	NFC-6	G1, G9, W9, W10	
18	< 3	31	36	30	NP	400	400	400	NFC-6	G9, W9	
19	< 2	31	36	30	NP	400 (Cl. 3 only)	400	400	NFC-6	W9	
20	⅛ < NPS ≤ 2	31	45	40	400	300	400	400	NFC-6	G1, G6, T4, W9, W10	
21	...	31	45	40	400	350 (Cl. 3 only)	400	400	NFC-6	G1, G9, T4, W9, W10	
22	< 3	31	45	40	NP	300	400	400	NFC-6	G9, T4, W9	
23	...	31	30	9	NP	300	400	400	NFC-7	T3	
24	...	31	30	9	400	300	NP	NP	NFC-1	G1, T3, W10	04
25	...	31	30	9	400	300	400	400	NFC-1	G1, T3, W10	04 A01
26	...	31	30	9	NP	300 (Cl. 3 only)	400	NP	NFC-1	G1, T3, W10	A05
27	...	31	30	9	NP	300 (Cl. 3 only)	400	400	NFC-1	G14, T3, W11	A05
28	...	31	30	10	NP	300	400	400	NFC-1	T2	
29	...	31	32	15	NP	300 (Cl. 3 only)	400	400	NFC-1	G14, T4, W3	A05
30	2 < NPS ≤ 12	31	36	30	400	400	400	400	NFC-6	G1, W9, W10	
31	...	31	36	30	400	400 (Cl. 3 only)	400	400	NFC-6	G1, G9, W9, W10	
32	< 3	31	36	30	NP	400	400	400	NFC-6	G9, W9	
33	< 2	31	36	30	NP	400 (Cl. 3 only)	400	400	NFC-6	W9	
34	⅛ < NPS ≤ 2	31	45	40	400	300	400	400	NFC-6	G1, G6, T4, W9, W10	
35	< 4	31	45	40	400	350 (Cl. 3 only)	400	400	NFC-6	G1, G9, T4, W9, W10	
36	< 3	31	45	40	NP	300	400	400	NFC-6	G9, T4, W9	
37	...	31	30	10	NP	300	400	400	NFC-1	T2	
38	≤ 2	31	30	10	NP	300 (Cl. 3 only)	NP	NP	NFC-1	T2	

INTERACTIVE TABLE

TABLE 1B (CONT'D)
SECTION I; SECTION III, CLASS 2 AND 3;* SECTION VIII, DIVISION 1; AND SECTION XII
MAXIMUM ALLOWABLE STRESS VALUES *S* FOR NONFERROUS MATERIALS
(*See Maximum Temperature Limits for Restrictions on Class)

	Line No.	Maximum Allowable Stress, ksi (Multiply by 1000 to Obtain psi), for Metal Temperature, °F, Not Exceeding																	
		−20 to 100	150	200	250	300	350	400	450	500	550	600	650	700	750	800	850	900	950
	1	10.3	10.3	10.3	10.3	10.0	9.7	9.4	...	...	...	...	...	...	...	...	...	...	...
	2	10.3	10.3	10.3	10.3	10.0	9.7	9.4	...	...	...	...	...	...	...	...	...	...	...
	3	10.3	10.3	10.3	10.3	10.0	9.7	9.4	...	...	...	...	...	...	...	...	...	...	...
	4	10.3	10.3	10.3	10.3	10.0	9.7	9.4	...	...	...	...	...	...	...	...	...	...	...
	5	12.9	12.9	12.9	12.9	12.5	11.8	4.3	...	...	...	...	...	...	...	...	...	...	...
	6	12.9	12.9	12.9	12.9	12.5	11.8	4.3	...	...	...	...	...	...	...	...	...	...	...
	7	12.9	12.9	12.9	12.9	12.5	11.8	4.3	...	...	...	...	...	...	...	...	...	...	...
	8	6.7	5.6	5.4	5.3	5.0	4.0	3.0	...	...	...	...	...	...	...	...	...	...	...
	9	6.7	5.6	5.4	5.3	5.0	4.0	3.0	...	...	...	...	...	...	...	...	...	...	...
	10	6.7	5.6	5.4	5.3	5.0	4.0	3.0	...	...	...	...	...	...	...	...	...	...	...
A05	11	5.3	4.5	4.3	4.2	4.0	4.0	3.0	...	...	...	...	...	...	...	...	...	...	...
	12	6.7	5.6	5.4	5.3	5.0	4.0	3.0	...	...	...	...	...	...	...	...	...	...	...
	13	6.0	5.1	4.9	4.8	4.7	...	...	...	...	...	...	...	...	...	...	...	...	...
04	14	6.0	5.1	4.9	4.8	4.7	4.0	3.0	...	...	...	...	...	...	...	...	...	...	...
A05 04	15	6.0	5.1	4.9	4.8	4.7	4.0	3.0	...	...	...	...	...	...	...	...	...	...	...
	16	10.3	10.3	10.3	10.3	10.0	9.7	9.4	...	...	...	...	...	...	...	...	...	...	...
	17	10.3	10.3	10.3	10.3	10.0	9.7	9.4	...	...	...	...	...	...	...	...	...	...	...
	18	10.3	10.3	10.3	10.3	10.0	9.7	9.4	...	...	...	...	...	...	...	...	...	...	...
	19	10.3	10.3	10.3	10.3	10.0	9.7	9.4	...	...	...	...	...	...	...	...	...	...	...
	20	12.9	12.9	12.9	12.9	12.5	11.8	4.3	...	...	...	...	...	...	...	...	...	...	...
	21	12.9	12.9	12.9	12.9	12.5	11.8	4.3	...	...	...	...	...	...	...	...	...	...	...
	22	12.9	12.9	12.9	12.9	12.5	11.8	4.3	...	...	...	...	...	...	...	...	...	...	...
	23	6.0	5.1	4.9	4.8	4.7	4.0	3.0	...	...	...	...	...	...	...	...	...	...	...
04	24	6.0	5.1	4.9	4.8	4.7	4.0	3.0	...	...	...	...	...	...	...	...	...	...	...
A05 04	25	6.0	5.1	4.9	4.8	4.7	4.0	3.0	...	...	...	...	...	...	...	...	...	...	...
A05	26	6.0	5.1	4.9	4.8	4.7	4.0	3.0	...	...	...	...	...	...	...	...	...	...	...
A05	27	5.1	4.3	4.1	4.1	4.0	3.4	2.6	...	...	...	...	...	...	...	...	...	...	...
	28	6.7	5.6	5.4	5.3	5.0	4.0	3.0	...	...	...	...	...	...	...	...	...	...	...
A05	29	7.8	7.8	7.8	7.8	7.5	7.3	2.6	...	...	...	...	...	...	...	...	...	...	...
	30	10.3	10.3	10.3	10.3	10.0	9.7	9.4	...	...	...	...	...	...	...	...	...	...	...
	31	10.3	10.3	10.3	10.3	10.0	9.7	9.4	...	...	...	...	...	...	...	...	...	...	...
	32	10.3	10.3	10.3	10.3	10.0	9.7	9.4	...	...	...	...	...	...	...	...	...	...	...
	33	10.3	10.3	10.3	10.3	10.0	9.7	9.4	...	...	...	...	...	...	...	...	...	...	...
	34	12.9	12.9	12.9	12.9	12.5	11.8	4.3	...	...	...	...	...	...	...	...	...	...	...
	35	12.9	12.9	12.9	12.9	12.5	11.8	4.3	...	...	...	...	...	...	...	...	...	...	...
	36	12.9	12.9	12.9	12.9	12.5	11.8	4.3	...	...	...	...	...	...	...	...	...	...	...
	37	6.7	5.6	5.4	5.3	5.0	4.0	3.0	...	...	...	...	...	...	...	...	...	...	...
	38	6.7	5.6	5.4	5.3	5.0	...	...	...	...	...	...	...	...	...	...	...	...	...

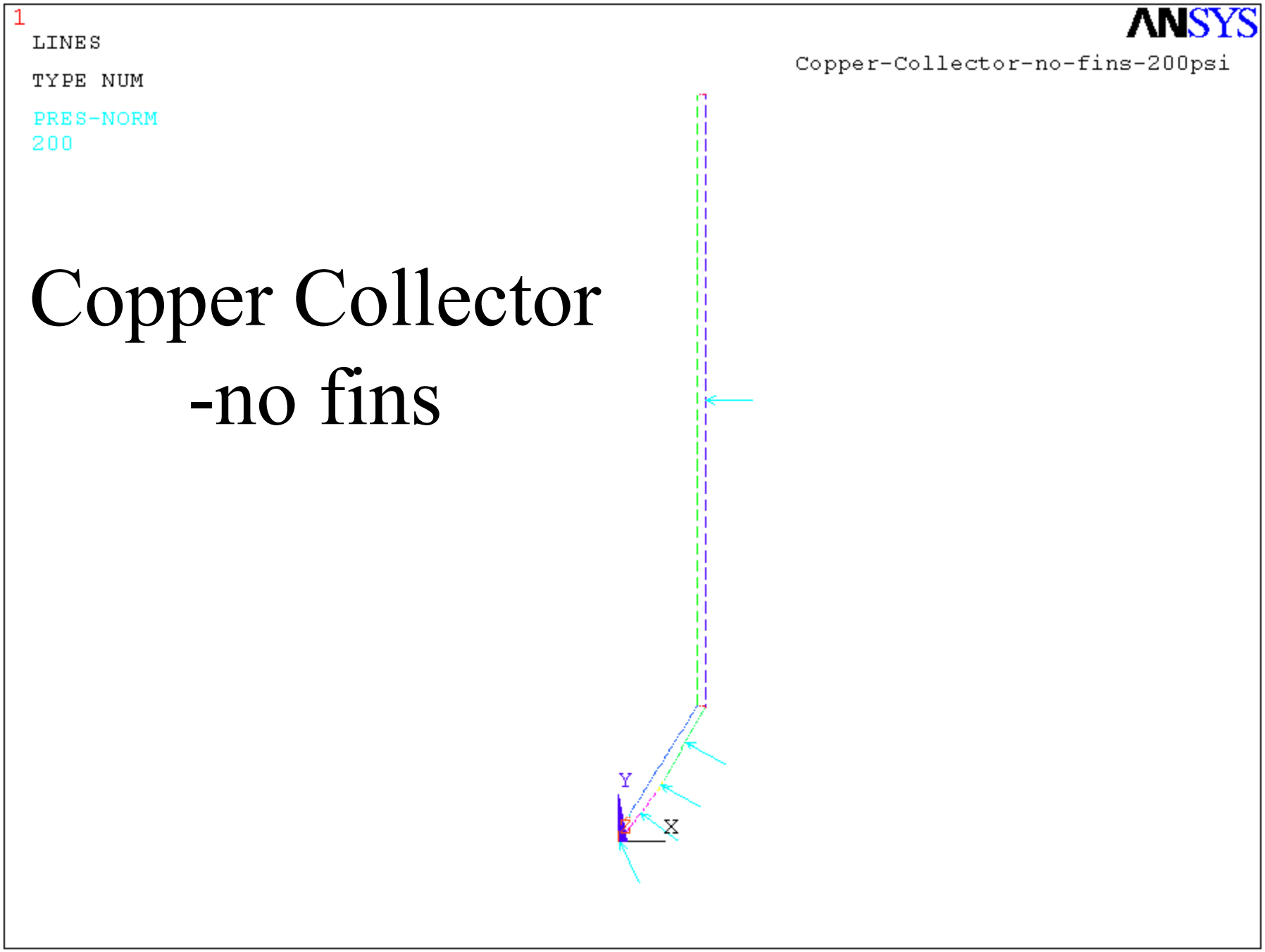

Copper Collector -no fins

1
ELEMENTS
U

ANSYS

Copper-Collector-no-fins-200psi

Copper Collector

- no fins

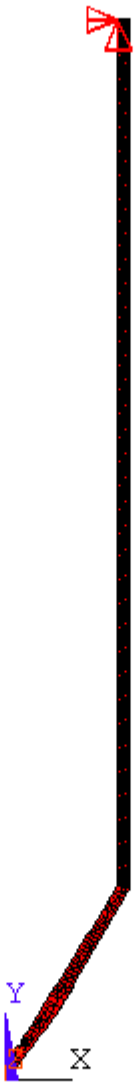

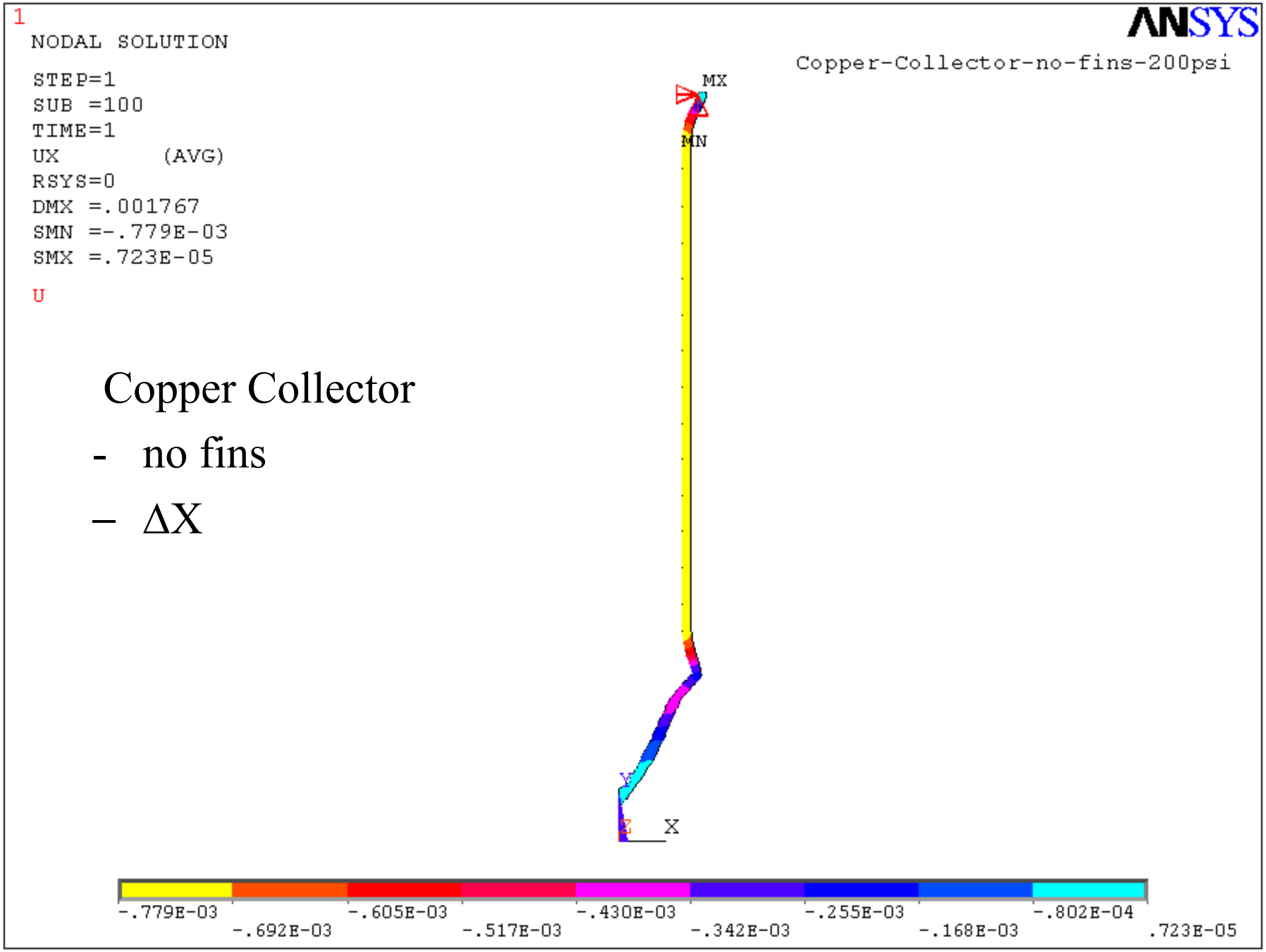

Copper Collector

- no fins
- ΔX

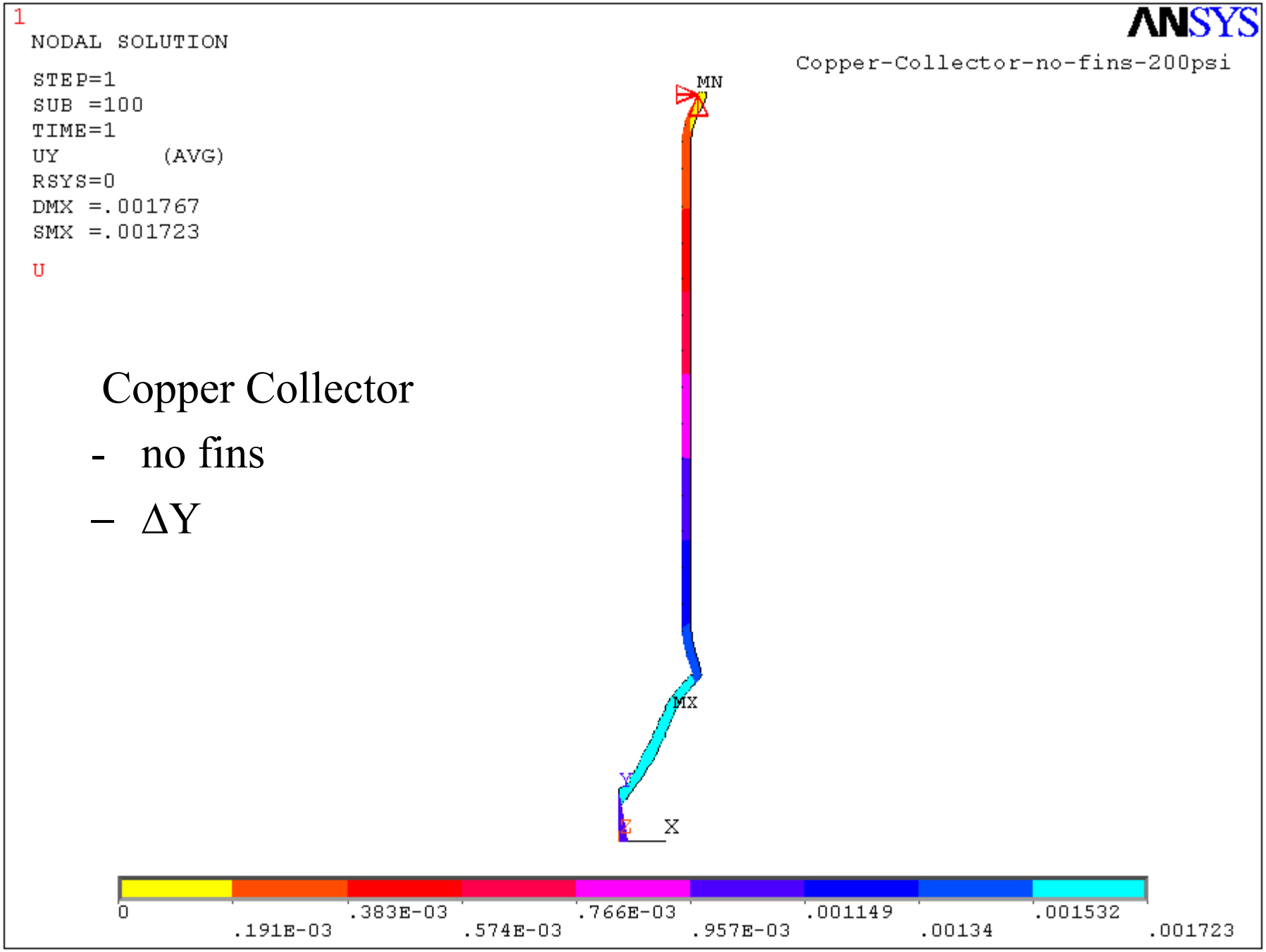

Copper Collector

- no fins
- ΔY

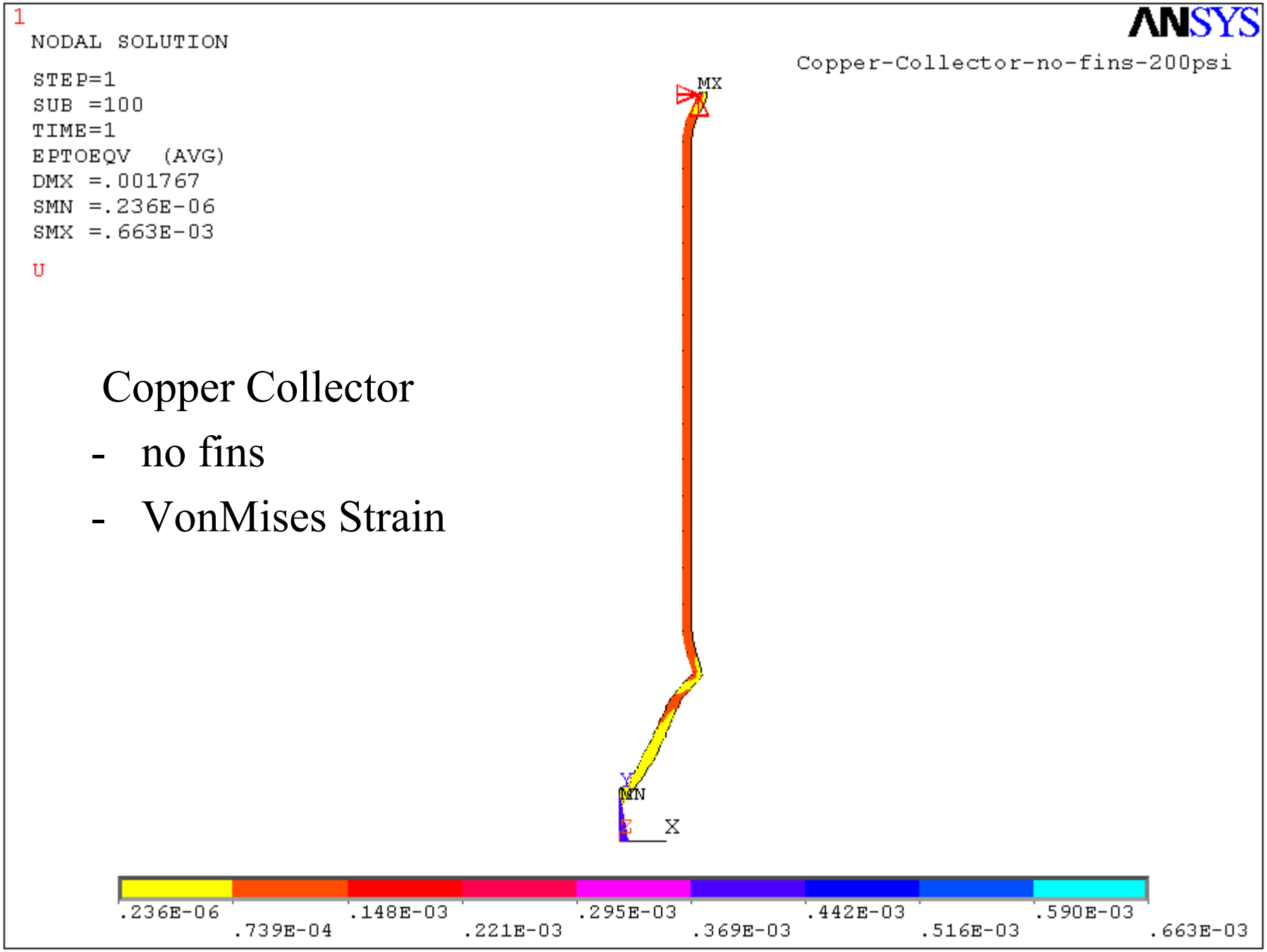

Copper Collector

- no fins
- VonMises Strain

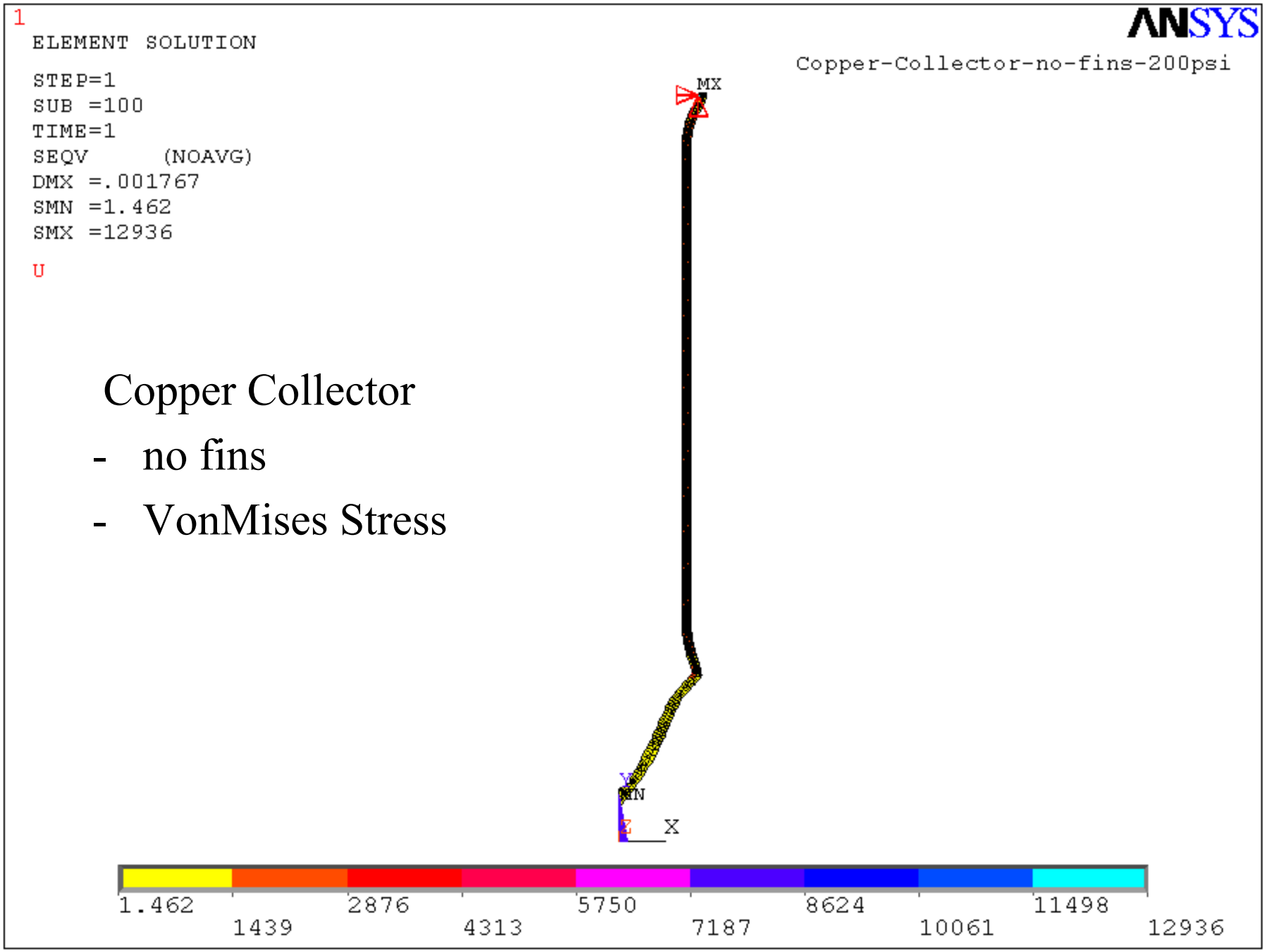

Copper Collector

- no fins
- VonMises Stress

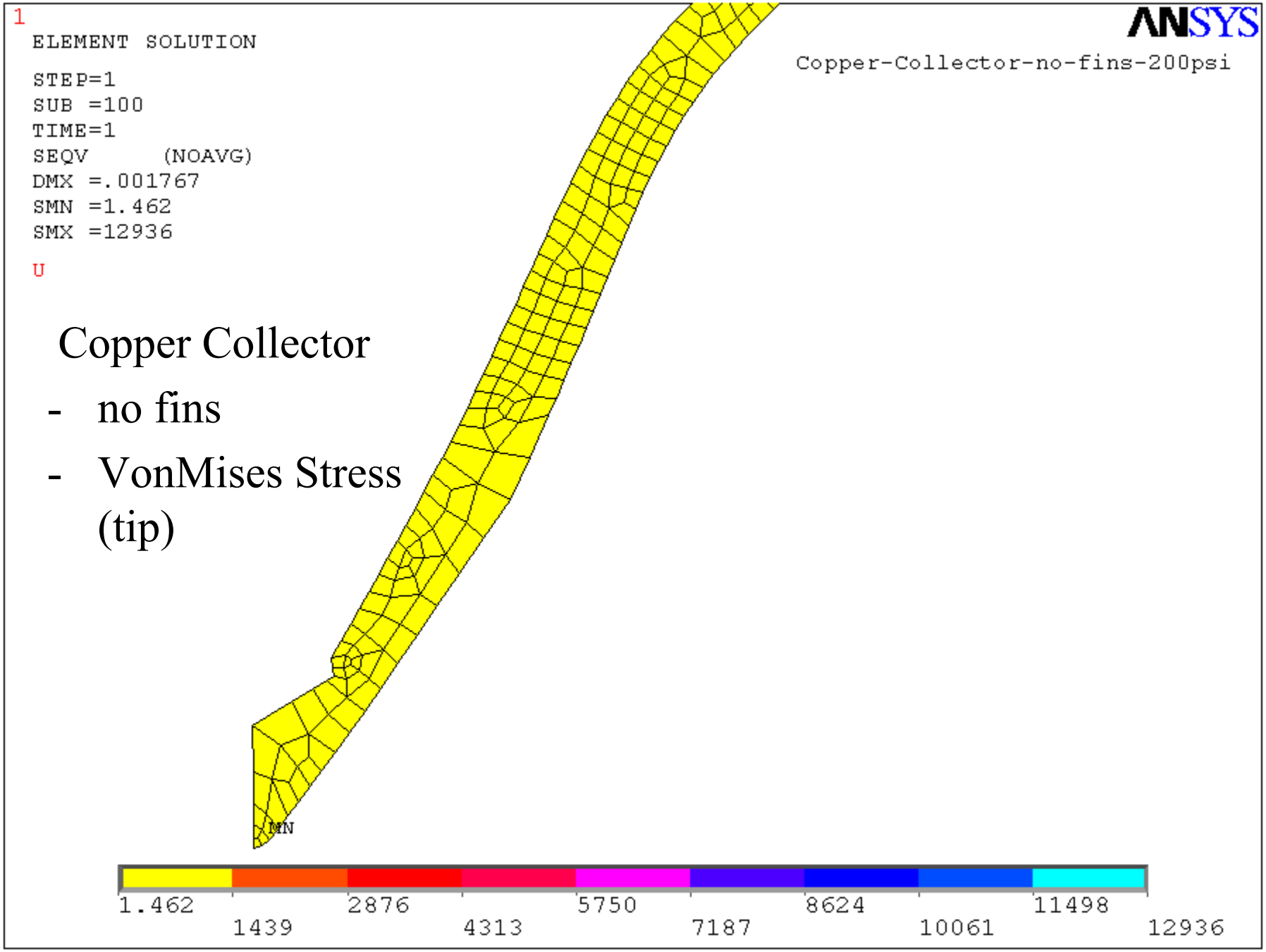

Copper Collector

- no fins
- VonMises Stress (tip)

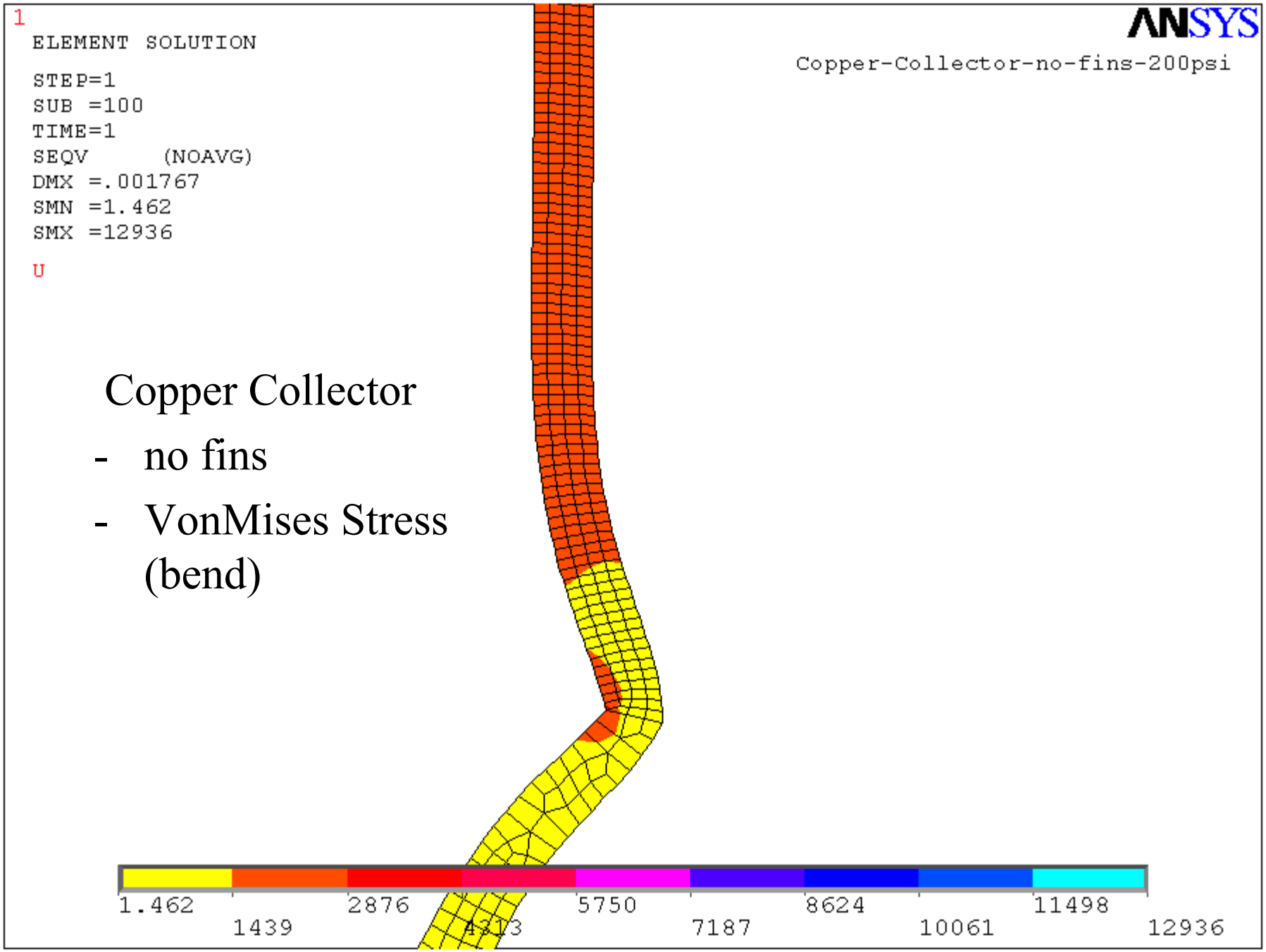

Copper Collector

- no fins
- VonMises Stress (bend)

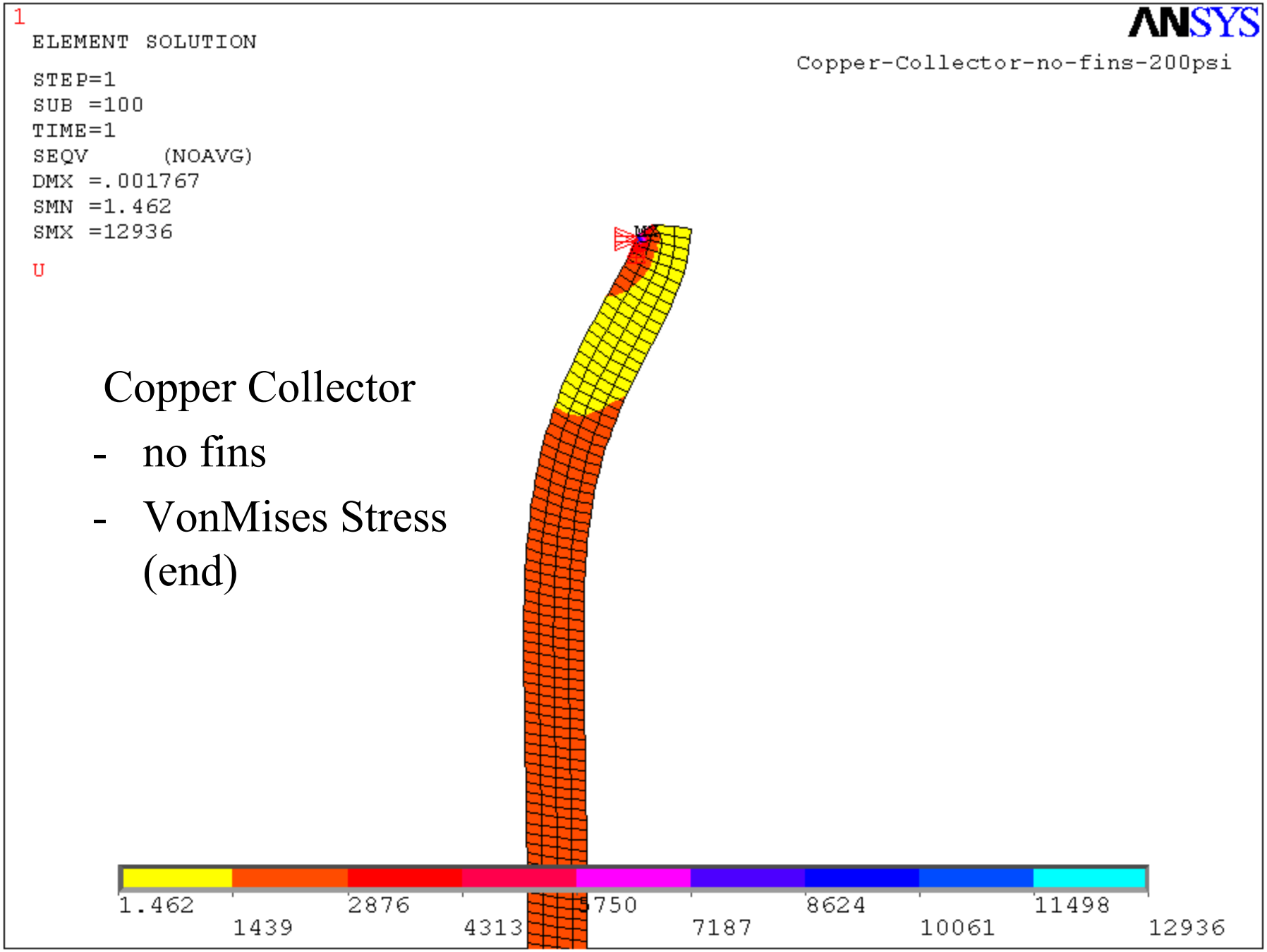

Copper Collector

- no fins
- VonMises Stress (end)

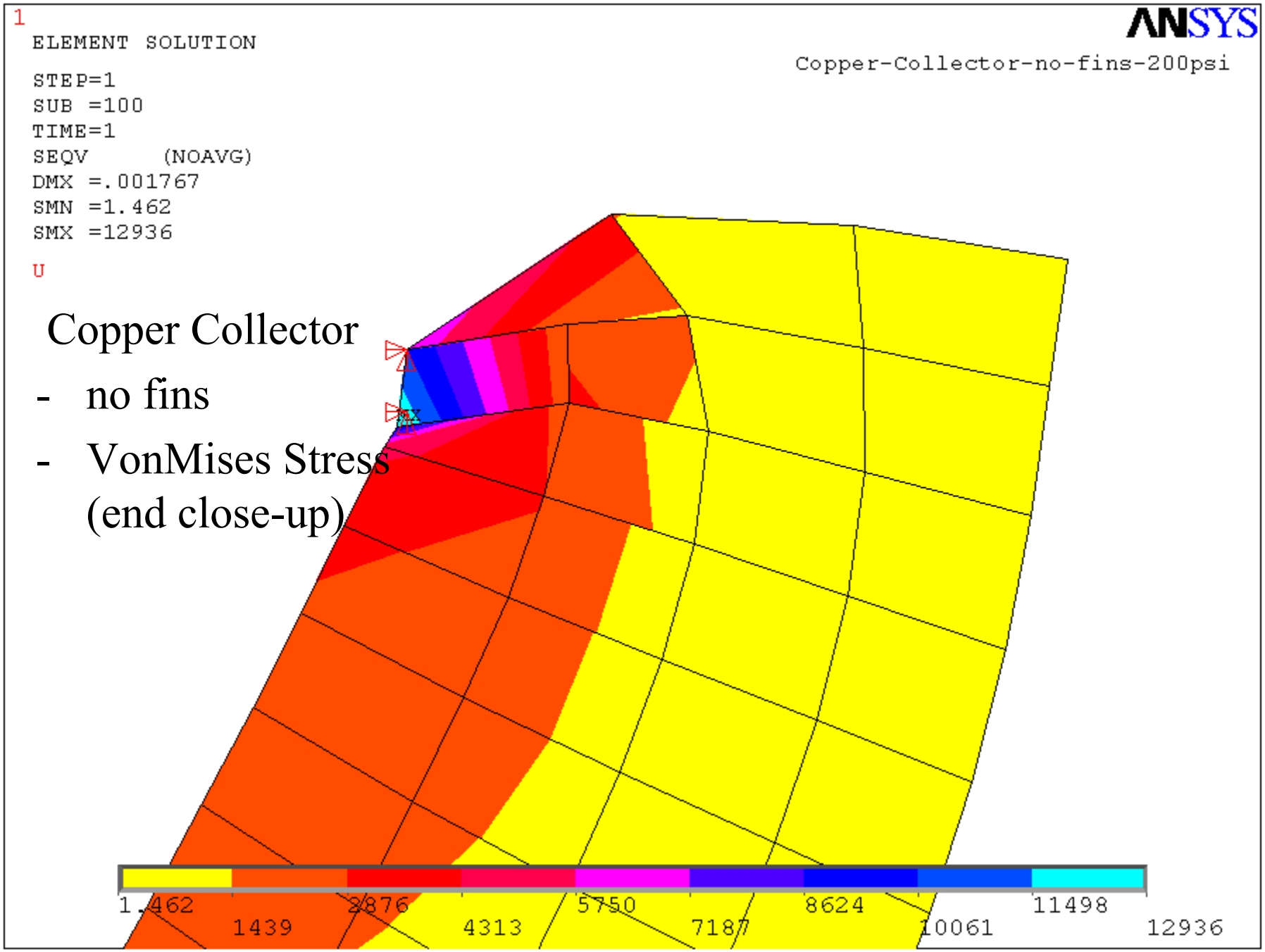

Copper Collector

- no fins
- VonMises Stress (end close-up)

Summary

- Using AMSE press. vessel code of materials for 200psi hydrostatic press. test -
  - Welded thin flanges are no good.
  - Welded full thickness flange is no good.
  - Bolted full thickness flange is the best option.

  - Interior welding of ring required.

  - Copper collector design is good.

From: Kane, Steven F
To: McIntyre, Gary T; Tuozzolo, Joseph E;
cc: Lessard, Edward T; Karol, Raymond C;
Subject: Meeting on RF Cavities - S. Kane"s action items
Date: Wednesday, August 01, 2007 3:56:57 PM
Attachments: ASMEBandPVSecVIIID280percentRule.pdf
ASMEBandPVSecVIIID1Scope-hotwater.pdf

Gary/Joe;
Attached are the two action items I was tagged with in our meeting the other week. Please pass to Jesse, as I don't recall his last name, and he's the one that needs this information the most. First is the scope, or rather exclusion, for pressure vessels with hot water. The exclusion is a combination of temperature and pressure. Next is the "80% Rule" I talked about. This comes out of Division 2, since Jesse was doing FE to arrive at stress levels to determine compliance. The rule says 90% of yield for hydro and 80% for pneumatic. So, depending upon what rules you are using, you need to be conscious of that. Thanks

The significant problems we face cannot be solved at the same level of thinking we were at when we created them.

ASME BOILER AND PRESSURE VESSEL CODE
AN INTERNATIONAL CODE

RULES FOR CONSTRUCTION OF PRESSURE VESSELS

VIII

Division 1

2004 Edition
July 1, 2004

ASME BOILER AND PRESSURE VESSEL COMMITTEE
SUBCOMMITTEE ON PRESSURE VESSELS

THE AMERICAN SOCIETY OF MECHANICAL ENGINEERS
NEW YORK, NEW YORK

Date of Issuance: July 1, 2004
(Includes all Addenda dated July 2003 and earlier)

This international code or standard was developed under procedures accredited as meeting the criteria for American National Standards and it is an American National Standard. The Standards Committee that approved the code or standard was balanced to assure that individuals from competent and concerned interests have had an opportunity to participate. The proposed code or standard was made available for public review and comment that provides an opportunity for additional public input from industry, academia, regulatory agencies, and the public-at-large.

ASME does not "approve," "rate," or "endorse" any item, construction, proprietary device, or activity.

ASME does not take any position with respect to the validity of any patent rights asserted in connection with any items mentioned in this document, and does not undertake to insure anyone utilizing a standard against liability for infringement of any applicable letters patent, nor assume any such liability. Users of a code or standard are expressly advised that determination of the validity of any such patent rights, and the risk of infringement of such rights, is entirely their own responsibility.

Participation by federal agency representative(s) or person(s) affiliated with industry is not to be interpreted as government or industry endorsement of this code or standard.

ASME accepts responsibility for only those interpretations of this document issued in accordance with the established ASME procedures and policies, which precludes the issuance of interpretations by individuals.

The footnotes in this document are part of this American National Standard.

ASME collective membership mark

The above ASME symbols are registered in the U.S. Patent Office.

"ASME" is the trademark of the American Society of Mechanical Engineers.

No part of this document may be reproduced in any form, in an electronic retrieval system or otherwise, without the prior written permission of the publisher.

Library of Congress Catalog Card Number: 56-3934
Printed in the United States of America

Adopted by the Council of the American Society of Mechanical Engineers, 1914.
Revised 1940, 1941, 1943, 1946, 1949, 1952, 1953, 1956, 1959, 1962, 1965, 1968, 1971, 1974, 1977, 1980, 1983, 1986, 1989, 1992, 1995, 1998, 2001, 2004

The American Society of Mechanical Engineers
Three Park Avenue, New York, NY 10016-5990

Copyright © 2004 by
THE AMERICAN SOCIETY OF MECHANICAL ENGINEERS
All Rights Reserved

INTRODUCTION

SCOPE

U-1 SCOPE

U-1(a)

U-1(a)(1) The Foreword provides the basis for the rules described in this Division.

U-1(a)(2) For the scope of this Division, pressure vessels are containers for the containment of pressure, either internal or external. This pressure may be obtained from an external source, or by the application of heat from a direct or indirect source, or any combination thereof.

U-1(a)(3) This Division contains mandatory requirements, specific prohibitions, and nonmandatory guidance for pressure vessel materials, design, fabrication, examination, inspection, testing, certification, and pressure relief. The Code does not address all aspects of these activities, and those aspects which are not specifically addressed should not be considered prohibited. Engineering judgment must be consistent with the philosophy of this Division, and such judgments must never be used to overrule mandatory requirements or specific prohibitions of this Division. See also informative and nonmandatory guidance regarding metallurgical phenomena in Appendix A of Section II, Part D.

U-1(b) This Division is divided into three Subsections, Mandatory Appendices, and Nonmandatory Appendices. Subsection A consists of Part UG, covering the general requirements applicable to all pressure vessels. Subsection B covers specific requirements that are applicable to the various methods used in the fabrication of pressure vessels. It consists of Parts UW, UF, and UB dealing with welded, forged, and brazed methods, respectively. Subsection C covers specific requirements applicable to the several classes of materials used in pressure vessel construction. It consists of Parts UCS, UNF, UHA, UCI, UCL, UCD, UHT, ULW, and ULT dealing with carbon and low alloy steels, nonferrous metals, high alloy steels, cast iron, clad and lined material, cast ductile iron, ferritic steels with properties enhanced by heat treatment, layered construction, and low temperature materials, respectively. Section II, Part D also contains tables of maximum allowable stress values for these classes of materials.

The Mandatory Appendices address specific subjects not covered elsewhere in this Division, and their requirements are mandatory when the subject covered is included in construction under this Division. The Nonmandatory Appendices provide information and suggested good practices.

U-1(c)

U-1(c)(1) The scope of this Division has been established to identify the components and parameters considered in formulating the rules given in this Division. Laws or regulations issued by municipality, state, provincial, federal, or other enforcement or regulatory bodies having jurisdiction at the location of an installation establish the mandatory applicability of the Code rules, in whole or in part, within their jurisdiction. Those laws or regulations may require the use of this Division of the Code for vessels or components not considered to be within its Scope. These laws or regulations should be reviewed to determine size or service limitations of the coverage which may be different or more restrictive than those given here.

U-1(c)(2) Based on the Committee's consideration, the following classes of vessels are not included in the scope of this Division; however, any pressure vessel which meets all the applicable requirements of this Division may be stamped with the Code U Symbol:

(a) those within the scope of other Sections;

(b) fired process tubular heaters;

(c) pressure containers which are integral parts or components of rotating or reciprocating mechanical devices, such as pumps, compressors, turbines, generators, engines, and hydraulic or pneumatic cylinders where the primary design considerations and/or stresses are derived from the functional requirements of the device;

(d) except as covered in U-1(f), structures whose primary function is the transport of fluids from one location to another within a system of which it is an integral part, that is, piping systems;

(e) piping components, such as pipe, flanges, bolting, gaskets, valves, expansion joints, fittings, and the pressure containing parts of other components, such as strainers and devices which serve such purposes as mixing, separating, snubbing, distributing, and metering or

controlling flow, provided that pressure containing parts of such components are generally recognized as piping components or accessories;

(f) a vessel for containing water[1] under pressure, including those containing air the compression of which serves only as a cushion, when none of the following limitations are exceeded:

(1) a design pressure of 300 psi (2 MPa);

(2) a design temperature of 210°F (99°C);

(g) a hot water supply storage tank heated by steam or any other indirect means when none of the following limitations is exceeded:

(1) a heat input of 200,000 Btu/hr (58.6 kW);

(2) a water temperature of 210°F (99°C);

(3) a nominal water containing capacity of 120 gal (450 L);

A05 *(h)* vessels having an internal or external operating pressure (see 3-2) not exceeding 15 psi (100 kPa) with no limitation on size [see UG-28(f) and 9-1(c)];

(i) vessels having an inside diameter, width, height, or cross section diagonal not exceeding 6 in. (152 mm), with no limitation on length of vessel or pressure;

(j) pressure vessels for human occupancy.[2]

U-1(d) The rules of this Division have been formulated on the basis of design principles and construction practices applicable to vessels designed for pressures not exceeding 3000 psi (20 MPa). For pressures above 3000 psi (20 MPa), deviations from and additions to these rules usually are necessary to meet the requirements of design principles and construction practices for these higher pressures. Only in the event that after having applied these additional design principles and construction practices the vessel still complies with all of the requirements of this Division may it be stamped with the applicable Code symbol.

U-1(e) In relation to the geometry of pressure containing parts, the scope of this Division shall include the following:

U-1(e)(1) where external piping; other pressure vessels including heat exchangers; or mechanical devices, such as pumps, mixers, or compressors, are to be connected to the vessel:

(a) the welding end connection for the first circumferential joint for welded connections [see UW-13(g)];

(b) the first threaded joint for screwed connections;

(c) the face of the first flange for bolted, flanged connections;

(d) the first sealing surface for proprietary connections or fittings;

U-1(e)(2) where nonpressure parts are welded directly to either the internal or external pressure retaining surface of a pressure vessel, this scope shall include the design, fabrication, testing, and material requirements established for nonpressure part attachments by the applicable paragraphs of this Division;[3]

U-1(e)(3) pressure retaining covers for vessel openings, such as manhole and handhole covers;

U-1(e)(4) the first sealing surface for proprietary fittings or components for which rules are not provided by this Division, such as gages, instruments, and nonmetallic components.

U-1(f) The scope of the Division includes provisions for pressure relief devices necessary to satisfy the requirements of UG-125 through UG-136 and Appendix 11.

U-1(g) Unfired steam boilers as defined in Section I shall be constructed in accordance with the rules of Section I or this Division [see UG-125(b) and UW-2(c)].

The following pressure vessels in which steam is generated shall be constructed in accordance with the rules of this Division:

U-1(g)(1) vessels known as evaporators or heat exchangers;

U-1(g)(2) vessels in which steam is generated by the use of heat resulting from operation of a processing system containing a number of pressure vessels such as used in the manufacture of chemical and petroleum products;

U-1(g)(3) vessels in which steam is generated but not withdrawn for external use.

U-1(h) Pressure vessels or parts subject to direct firing from the combustion of fuel (solid, liquid, or gaseous), which are not within the scope of Sections I, III, or IV may be constructed in accordance with the rules of this Division [see UW-2(d)].

U-1(i) Gas fired jacketed steam kettles with jacket operating pressures not exceeding 50 psi (345 kPa) may be constructed in accordance with the rules of this Division (see Appendix 19).

U-1(j) Pressure vessels exclusive of those covered in U-1(c), U-1(g), U-1(h), and U-1(i) that are not required by the rules of this Division to be fully radiographed,

[1] The water may contain additives provided the flash point of the aqueous solution at atmospheric pressure is 185°F or higher. The flash point shall be determined by the methods specified in ASTM D 93 or in ASTM D 56, whichever is appropriate.

[2] Requirements for pressure vessels for human occupancy are covered by ANSI/ASME PVHO-1.

[3] These requirements for design, fabrication, testing, and material for nonpressure part attachments do not establish the length, size, or shape of the attachment material. Pads and standoffs are permitted and the scope can terminate at the next welded or mechanical joint.

which are not provided with quick actuating closures (see UG-35), and that do not exceed the following volume and pressure limits may be exempted from inspection by Inspectors, as defined in UG-91, provided that they comply in all other respects with the requirements of this Division:

U-1(j)(1) 5 cu ft (0.14 m^3) in volume and 250 psi (1.7 MPa) design pressure; or

U-1(j)(2) 3 cu ft (0.08 m^3) in volume and 350 psi (2.4 MPa) design pressure;

U-1(j)(3) 1½ cu ft (0.04 m^3) in volume and 600 psi (4.1 MPa) design pressure.

In an assembly of vessels, the limitations in (1) through (3) above apply to each vessel and not the assembly as a whole. Straight line interpolation for intermediate volumes and design pressures is permitted. Vessels fabricated in accordance with this rule shall be marked with the "UM" Symbol in Fig. UG-116 sketch (b) and with the data required in UG-116. Certificates of Compliance shall satisfy the requirements of UG-120(a).

U-1(k) The degree of nondestructive examination(s) and the acceptance standards beyond the requirements of this Division shall be a matter of prior agreement between the Manufacturer and user or his designated agent.

GENERAL

U-2 GENERAL

(a) The user or his designated agent[4] shall establish the design requirements for pressure vessels, taking into consideration factors associated with normal operation, such other conditions as startup and shutdown, and abnormal conditions which may become a governing design consideration (see UG-22).

Such consideration shall include but shall not be limited to the following:

(1) the need for corrosion allowances;

(2) the definition of lethal services. For example, see UW-2(a).

(3) the need for postweld heat treatment beyond the requirements of this Division and dependent on service conditions;

(4) for pressure vessels in which steam is generated, or water is heated [see U-1(g) and (h)], the need for piping, valves, instruments, and fittings to perform the functions covered by PG-59 through PG-61 of Section I.

[4] For this Division, the user's designated agent may be either a design agency specifically engaged by the user, the Manufacturer of a system for a specific service which includes a pressure vessel as a part and which is purchased by the user, or an organization which offers pressure vessels for sale or lease for specific services.

(b) Responsibilities[5]

(1) The Manufacturer of any vessel or part to be marked with the Code Symbol has the responsibility of complying with all of the applicable requirements of this Division and, through proper certification, of assuring that all work done by others also complies. The vessel or part Manufacturer shall have available for the Inspector's review the applicable design calculations. See 10-5 and 10-15(d).

(2) Some types of work, such as forming, nondestructive examination, and heat treating, may be performed by others (for welding, see UW-26 and UW-31). It is the vessel or part Manufacturer's responsibility to ensure that all work so performed complies with all the applicable requirements of this Division. After ensuring Code compliance, the vessel or part may be Code stamped by the appropriate Code stamp holder after acceptance by the Inspector.

(c) A vessel may be designed and constructed using any combination of the methods of fabrication and the classes of materials covered by this Division provided the rules applying to each method and material are complied with and the vessel is marked as required by UG-116.

(d) When the strength of any part cannot be computed with a satisfactory assurance of safety, the rules provide procedures for establishing its maximum allowable working pressure.

(e) It is the duty of the Inspector to make all of the inspections specified by the rules of this Division, and of monitoring the quality control and the examinations made by the Manufacturer. He shall make such other inspections as in his judgment are necessary to permit him to certify that the vessel has been designed and constructed in accordance with the requirements. The Inspector has the duty of verifying that the applicable calculations have been made and are on file at Manufacturer's plant at the time the Data Report is signed. Any questions concerning the calculations raised by the Inspector must be resolved. See UG-90(c)(1).

(f) The rules of this Division shall serve as the basis for the Inspector to:

(1) perform the required duties;

(2) authorize the application of the Code Symbol;

(3) sign the Certificate of Shop (or Field Assembly) Inspection.

(g) This Division of Section VIII does not contain rules to cover all details of design and construction. Where complete details are not given, it is intended that

[5] See UG-90(b) and UG-90(c)(1) for summaries of the responsibilities of the Manufacturer and the duties of the Inspector.

the Manufacturer, subject to the acceptance of the Inspector, shall provide details of design and construction which will be as safe as those provided by the rules of this Division.

(h) Field assembly of vessels constructed to this Division may be performed as follows.

(1) The Manufacturer of the vessel completes the vessel in the field, completes the Form U-1 or U-1A Manufacturer's Data Report, and stamps the vessel.

(2) The Manufacturer of parts of a vessel to be completed in the field by some other party stamps these parts in accordance with Code rules and supplies the Form U-2 or U-2A Manufacturer's Partial Data Report to the other party. The other party, who must hold a valid U Certificate of Authorization, makes the final assembly, required NDE, final pressure test; completes the Form U-1 or U-1A Manufacturer's Data Report; and stamps the vessel.

(3) The field portion of the work is completed by a holder of a valid U Certificate of Authorization other than the vessel Manufacturer. The stamp holder performing the field work is required to supply a Form U-2 or U-2A Manufacturer's Partial Data Report covering the portion of the work completed by his organization (including data on the pressure test if conducted by the stamp holder performing the field work) to the Manufacturer responsible for the Code vessel. The vessel Manufacturer applies his U Stamp in the presence of a representative from his Inspection Agency and completes the Form U-1 or U-1A Manufacturer's Data Report with his Inspector.

In all three alternatives, the party completing and signing the Form U-1 or U-1A Manufacturer's Data Report assumes full Code responsibility for the vessel. In all three cases, each Manufacturer's Quality Control System shall describe the controls to assure compliance for each Code stamp holder.

(i) For some design analyses, both a chart or curve and a formula or tabular data are given. Use of the formula or tabular data may result in answers which are slightly different from the values obtained from the chart or curve. However, the difference, if any, is within practical accuracy and either method is acceptable.

U-3 STANDARDS REFERENCED BY THIS DIVISION

(a) Throughout this Division references are made to various standards, such as ANSI standards, which cover pressure–temperature rating, dimensional, or procedural standards for pressure vessel parts. These standards, with the year of the acceptable edition, are listed in Table U-3.

(b) Rules for the use of these standards are stated elsewhere in this Division.

U-4 UNITS OF MEASUREMENT 04

Either U.S. Customary units or SI units may be used for compliance with all requirements of this edition, but one system shall be used consistently throughout for all phases of construction.

Either the U.S. Customary units or SI units that are listed in Mandatory Appendix 33 are identified in the text, or are identified in the nomenclature for equations, shall be used consistently for all phases of construction (e.g. materials, design, fabrication, and reports). Since values in the two systems are not exact equivalents, each system shall be used independently of the other without mixing U.S. Customary units and SI units.

When SI units are selected, U.S. Customary values in referenced specifications that do not contain SI units shall be converted to SI values to at least three significant figures for use in calculations and other aspects of construction.[6]

[6] *Guidance for conversion of units from U.S. Customary to SI* is found in Nonmandatory Appendix GG.

ASME BOILER AND PRESSURE VESSEL CODE
AN INTERNATIONAL CODE

RULES FOR CONSTRUCTION OF PRESSURE VESSELS

VIII

Division 2

Alternative Rules

2004 Edition
July 1, 2004

ASME BOILER AND PRESSURE VESSEL COMMITTEE
SUBCOMMITTEE ON PRESSURE VESSELS

THE AMERICAN SOCIETY OF MECHANICAL ENGINEERS
NEW YORK, NEW YORK

Date of Issuance: July 1, 2004
(Includes all Addenda dated July 2003 and earlier)

This international code or standard was developed under procedures accredited as meeting the criteria for American National Standards and it is an American National Standard. The Standards Committee that approved the code or standard was balanced to assure that individuals from competent and concerned interests have had an opportunity to participate. The proposed code or standard was made available for public review and comment that provides an opportunity for additional public input from industry, academia, regulatory agencies, and the public-at-large.

ASME does not "approve," "rate," or "endorse" any item, construction, proprietary device, or activity.

ASME does not take any position with respect to the validity of any patent rights asserted in connection with any items mentioned in this document, and does not undertake to insure anyone utilizing a standard against liability for infringement of any applicable letters patent, nor assume any such liability. Users of a code or standard are expressly advised that determination of the validity of any such patent rights, and the risk of infringement of such rights, is entirely their own responsibility.

Participation by federal agency representative(s) or person(s) affiliated with industry is not to be interpreted as government or industry endorsement of this code or standard.

ASME accepts responsibility for only those interpretations of this document issued in accordance with the established ASME procedures and policies, which precludes the issuance of interpretations by individuals.

The footnotes in this document are part of this American National Standard.

ASME collective membership mark

The above ASME symbols are registered in the U.S. Patent Office.

"ASME" is the trademark of the American Society of Mechanical Engineers.

No part of this document may be reproduced in any form, in an electronic retrieval system or otherwise, without the prior written permission of the publisher.

Library of Congress Catalog Card Number: 56-3934
Printed in the United States of America

Adopted by the Council of the American Society of Mechanical Engineers, 1914.
Revised 1940, 1941, 1943, 1946, 1949, 1952, 1953, 1956, 1959, 1962, 1965, 1968, 1971, 1974, 1977, 1980, 1983, 1986, 1989, 1992, 1995, 1998, 2001, 2004

The American Society of Mechanical Engineers
Three Park Avenue, New York, NY 10016-5990

Copyright © 2004 by
THE AMERICAN SOCIETY OF MECHANICAL ENGINEERS
All Rights Reserved

If any combination of applied loads produces yielding, such joints are subject to ratcheting because the mating members may become loose at the end of each complete operating cycle and start the next cycle in a new relationship with each other, with or without manual manipulation. Additional distortion may occur in each cycle so that interlocking parts, such as threads, can eventually lose engagement. Therefore, primary plus secondary stress intensities (see 4-134), which result in slippage between the parts of a nonintegral connection in which disengagement could occur as a result of progressive distortion, shall be limited to the value S_y given in Table Y-1 of Section II, Part D.

AD-140 DESIGN CRITERIA

The design requirements of this Part AD provide specific design rules for certain commonly used pressure vessel shapes under pressure loading and, within prescribed limits, rules for the treatment of other loadings. Simplified criteria are included for determining whether an analysis for cyclic operation must be made. The thickness of the vessel parts and attached supports covered by these rules shall be determined by the applicable formula using the most severe combination of loadings and allowable stress intensities kS_m expected to occur simultaneously during design and operation. Stress intensities during test shall not exceed the limits in AD-151. The basis for these formulas is given below. Table AD-150.1 lists values of k that are appropriate for various load combinations.

(a) The theory of failure used in this Division is the maximum shear stress theory except in the case of some specifically designated configurations, shapes, or design rules included as a part of this Division. Stress intensity is defined as two times the maximum shear stress.

(b) The average value of the general primary membrane stress intensity across the thickness of the section under consideration, due to any combination of design pressure and mechanical loadings expected to occur simultaneously, should not exceed the design stress intensity value kS_m.

(c) The local primary membrane stress intensity due to any combination of design pressure and mechanical loadings expected to occur simultaneously is limited to $1.5kS_m$. The distance over which the stress intensity exceeds $1.1kS_m$ shall not extend in the meridional direction more than $\sqrt{Rt}$, where R is the radius at the midsurface of the shell or head measured normal to the surface from the axis of revolution in the meridional plane, and t is the nominal thickness of the shell or head under consideration.

(d) The primary bending stress due to any combination of design pressure and mechanical loadings expected to occur simultaneously shall not exceed $1.5\ kS_m$. (See Appendix 4 when the design of components involves combinations of calculated stresses.)

AD-140.1 Secondary Stresses. Secondary stresses may exist in vessels designed and fabricated in accordance with these rules, but limitations are provided to restrict such stresses to levels consistent with the rules in Appendix 4. Where construction details are not covered or where design conditions exceed the formula limitations, a detailed stress analysis in accordance with the rules of Appendix 4 shall be made.

AD-150 LOAD COMBINATIONS

Vessels and their supports shall be designed for the load combinations and maximum stress intensity limits kS_m under the conditions of design and operation as given in Table AD-150.1; for test, the load combination in Table AD-150.1 and the stress intensity limits in AD-151. Wind loads and earthquake loads need not be assumed to occur simultaneously.

AD-151 Upper Limits of Test Pressure

If the test pressure at any point in a vessel, including static head, exceeds the required test pressure defined in AT-300, AT-301, and AT-410 by more than 6%, the upper limit shall be established by the design engineer using all the loadings that may exist during the test.

AD-151.1 For Hydrostatically Tested Vessels. The hydrostatic test pressure of a completed vessel shall not exceed that value which results in the following stress intensity limits:

(a) a calculated primary membrane stress intensity P_m of 90% of the tabulated yield strength S_y at test temperature as given in the applicable table of Subpart 1 of Section II, Part D;

(b) a calculated primary membrane plus primary bending stress intensity $P_m + P_b$ not to exceed the applicable limits given in (1) or (2) below:

(1) $P_m + P_b \leq 1.35S_y$ for $P_m \leq 0.67S_y$;

(2) $P_m + P_b \leq 2.35S_y - 1.50P_m$ for $0.67S_y < P_m \leq 0.90S_y$;

where

S_y = tabulated yield strength at test temperature

AD-151.2 For Pneumatically Tested Vessels. The pneumatic test pressure of a completed vessel shall not exceed that value which results in the following stress intensity limits:

TABLE AD-150.1
STRESS INTENSITY k FACTORS FOR VARIOUS LOAD COMBINATIONS

Condition	Load Combinations (See AD-110)	k Factors	Calculated Stress Limit Basis
Design	A The design pressure, the dead load of the vessel, the contents of the vessel, the imposed load of the mechanical equipment, and external attachment loads	1.0	Based on the corroded thickness at design metal temperature
	B Condition A above plus wind load	1.2	Based on the corroded thickness at design metal temperature
	C Condition A above plus earthquake load	1.2	Based on the corroded thickness at design metal temperature
	D Condition A above plus loads resulting from wave action [Note (1)] (NOTE: The condition of structural instability or buckling must be considered.)	1.2	Based on the corroded thickness at design metal temperature
Operation	A The actual operating loading conditions. This is the basis of fatigue life evaluation.	See AD-160 and Appendix 5	Based on corroded thickness at operating pressure and metal operating temperature
Test	A The required test pressure, the dead load of the vessel, the contents of the vessel, the imposed load of the mechanical equipment, and external attachment loads	See AD-151 for special limits	Based on actual design values at test temperature

NOTE:
(1) When the rules of this Division are used in design of pressure vessels installed in oceangoing ships, barges, and other floating craft [per AG-100(b)(2)], dynamic loads resulting from wave action included under Condition D shall be the most probable largest loads encountered during the vessel's life and having a probability level per wave encounter not greater than 10^{-8}, which corresponds to one occurrence in 20 years.

(a) a calculated primary membrane stress intensity P_m of 80% of the tabulated yield strength S_y at test temperature as given in the applicable table of Subpart 1 of Section II, Part D;

(b) a calculated primary membrane plus primary bending stress intensity $P_m + P_b$ not to exceed the applicable limits given in (1) or (2) below:

(1) $P_m + P_b \leq 1.20S_y$ for $P_m \leq 0.67S_y$;

(2) $P_m + P_b \leq 2.20S_y - 1.50P_m$ for $0.67S_y < P_m \leq 0.80S_y$;

AD-151.3 For Multichamber Vessels. In the case of multichamber vessels, pressure may be applied simultaneously to the appropriate adjacent chamber to maintain the stress intensity limits set forth in AD-151.1 and AD-151.2 (see AT-310).

AD-160 FATIGUE EVALUATION

When determining whether or not a vessel fatigue analysis shall be specified, the user may consider experience with comparable equipment operating under similar conditions in accordance with the provisions of AD-160.1. When not based upon significant applicable service experience, the need for a fatigue analysis shall be determined in accordance with the provisions of AD-160.2 and AD-160.3. Paragraphs AD-160.2 and AD-160.3 are not applicable to vessels for which the number of loading cycles exceeds 10^6.

AD-160.1 Operating Experience. When the user is considering experience with comparable equipment operating under similar conditions as related to the design

Lessard, Edward T

From: Conrad, Cheryl S
Sent: Tuesday, October 16, 2007 3:12 PM
To: Lessard, Edward T
Subject: FW: Committee Vote - LESHC 07-18 ERL Project - Approved
Follow Up Flag: Follow up
Flag Status: Red

Ed,

Of the 5 committee members who were present at the meeting, there was a majority vote (R. Karol, J. Tuozzolo, and E. Lessard) indicating approval.
Two members did not vote.

Cheryl

From: Conrad, Cheryl S
Sent: Monday, October 08, 2007 4:36 PM
To: Alforque, Rodulfo; Beavis, Dana; Conrad, Cheryl S; Kane, Steven F; Karol, Raymond C; Lessard, Edward T; Mortazavi, Payman; Rehak, Margareta L; Travis, Richard J; Tuozzolo, Joseph E; Wu, Kuo-Chen; Haas, Edwin
Subject: Committee Vote - LESHC 07-18 ERL Project

All,

Ed has requested that you vote on whether or not you want to approve the ERL project be allowed to go forward with CPI as the manufacturer. Below is the information. Please submit your email vote by COB Monday, October 15.

The ERL beam dump design that was reviewed last August (**07-18**) is now planned to go forward using CPI as the manufacturer. Today, the ERL Project Manager indicated that obtaining a stamped or ASME certified vessel was not practicable because available designs would extend several feet beyond the space designed and built for the ERL (see **Correspondence** from Ady). This space restriction requires us to apply the equivalence process that is outlined in Part 851 to the proposed CPI-designed unit.

Ady Hershcovitch has communicated further with CPI and they will provide all documentation for the following if they are the chosen manufacturer:

1. General CPI-written welding and brazing procedures.
2. Product specific welding procedures documented on the appropriate drawings.
3. Proof that welders are certified to CPI welding procedures every 2 years. CPI uses a consultant certified by the American Welding Society that leads the training and performs the procedure-specific certifications. CPI will verify the trainer's credentials.
4. CPI will weld coupons representative of each weld joint and have them tested by an independent party.
5. CPI will do engineering calculations on the vessel and weld joints and evaluate the stresses at specified conditions.
6. CPI will provide materials certifications for all parts.
7. CPI will perform pressure tests and welding inspections.

Based on the above and additional documentation that the Committee requests, I am asking the committee to vote the ERL project be allowed to go forward with CPI as the manufacturer. Of course, this does not mean the dump is approved by the Committee for operations – just that it can be built by CPI. Additionally, based on our **07-18** minutes, the project will use a bolted flange in order to meet the ASME maximum allowable stress value.

Thank you.
Cheryl

Lessard, Edward T

From: Conrad, Cheryl S
Sent: Thursday, January 03, 2008 3:28 PM
To: Lessard, Edward T
Subject: RE: Committee Vote - LESHC 07-18 ERL Project - Approved
Follow Up Flag: Follow up
Flag Status: Red

Hi Ed,

Do you want to post this email on the web?

Cheryl

From: Lessard, Edward T
Sent: Tuesday, October 16, 2007 4:20 PM
To: Hershcovitch, Ady
Cc: Conrad, Cheryl S
Subject: Committee Vote - LESHC 07-18 ERL Project - Approved

Hi Ady:

The committee has voted to approve you go forward with CPI as the manufacturer. The next step is to meet the requirements of equivalence.

Regards.

Ed

Laboratory Environment Safety and Health Committee
Pressure and Cryogenic Safety Subcommittee

MINUTES OF MEETING 08-10

May 8, 2008

FINAL

Committee Members Present
D. Beavis
C. Conrad* (Secretary)
M. Gaffney
E. Haas
R. Karol
E. Lessard (Chairperson)
P. Mortazavi
J. Tuozzolo

(* non-voting)

Committee Members Absent
R. Alforque
S. Kane
M. Rehak
R. Travis* (Alternate Secretary)
K.C. Wu

Visitors

J.W. Glenn
G. McIntyre
C. Pai
D. Phillips
R. Than
R. Todd

Agenda:
1. Review of Energy Recovery Linac 5-Cell Cavity Pressure Vessel

Minutes of Meeting: Appended on pages 2 through 6.

ESH COMMITTEE MINUTES APPROVED:

[Signature on File]	**5/30/08**	**[Signature on File]**	**5/30/08**
E. Lessard	**Date**	**C. Parnell**	**Date**
LESHC Chairperson		**ESH ALD**	

Chairperson E. Lessard called the meeting of the Laboratory Environment Safety and Health Committee (LESHC) Pressure and Cryogenic Safety Subcommittee to order on May 8, 2008 at 1:40 p.m. The purpose of the meeting was to review the Energy Recovery Linac (ERL) 5-cell cavity which, because of backfill pressure potential, the Committee has to possibly view as a pressure vessel. Based on the approach that has been worked on by BNL and other labs, an acceptable alternative is to add pressure relief devices and burst disks.[1]

1 **Pressure Vessel Review –** G. McIntyre of C-AD presented an overview of the 5-cell cavity and addressed the 10CFR851 requirement of protecting vacuum systems if there is a chance of backfilling with pressurized gas. He also presented the relief scheme and the approach used for weld testing of the ERL electron gun.

1.1 G. McIntyre and other attendees made the following points during the course of the presentation and in response to specific Committee questions:[2]

1.1.1 The proposed cryogenic system for the ERL 5-cell cavity was previously reviewed by the LESHC in May 2006 (see 06-06 minutes). All 10 action items have been completed and are archived on the LESHC website and on the ERL website.

1.1.2 The cryomodule consists of a UHV vacuum niobium SRF 5-cell cavity surrounded by a 150-liter LHe capacity titanium helium vessel. Above this vessel is mounted a 550-liter LHe capacity ballast tank.

1.1.2.1 The ballast tank and helium vessel are filled with 4 ^{o}K LHe and the cryovacuum system pulls a vacuum on it causing the pressure and temperature to drop. The operating temperature is 2.1 ^{o}K.

1.1.2.2 To protect the UHV beam line components, a burst disk will be located at each end of the 5-cell cavity vacuum pipe. The burst disks will have a connection to a 10" vent header and in case a disk bursts, the discharge will be piped out of the Bldg. 912 cave via a stainless steel cryovent line which goes to the wall and has support columns.

1.1.2.3 The burst disks are not ASME certified and it is difficult to obtain the burst disks needed. BS&B burst disks (not ASME certified), available at 7 psig burst pressure, are used on devices at the JLAB/SNS SRF cavity which are similar in design to the 5-cell cavity.

1.1.2.3.1 BS&B's test data indicated they burst 2 disks at 6 psig and BS&B guarantees that the burst disks will burst between 5 and 7 psig. BS&B will fabricate 20 disks and verify that the pressure at which they burst is where it is supposed to be.

1.1.2.3.2 BNL has not tested any of these burst disks.

1.1.2.4 Pneumatic pressure-testing of the internal (beamline) UHV volume to the cavity will not be done because of contamination concerns.

1.1.2.5 There will be a pressure interlock for the ERL beamline —when the pressure gets too high, the vacuum valves which are not fast-acting (taking 3-5 sec) will close.

1.1.3 An explanation of the pressure limits and logic was presented. AES performed the ANSYS analysis for cavity external pressure (pressure from the LHe volume acting on the cavity) relief criteria which revealed local yielding at 44 psia (analysis reviewed in

[1] http://www.rhichome.bnl.gov/AGS/Accel/SND/LESHC/VaccumVesselSafetyDraft5-2-08.pdf

[2] G. McIntrye's presentation and these Minutes are posted on the LESHC website: http://www.rhichome.bnl.gov/AGS/Accel/SND/laboratory_environment,_safety_and_health_committee.htm.

LESHC 06-06 minutes). In accordance with the ASME Code, 2/3 of the yield gives the maximum pressure, in this case 29.9 psia.

1.1.3.1 AES suggested reducing the maximum external cavity pressure to 26 psia (baseline). Since the Code requires testing the cavity to 110% MAWP, this reduced the MAWP to 23.6 psia.

1.1.3.2 To protect the cavity, a reliable relief pressure device for the helium volume was sought to open at < 8.6 psig.

1.1.3.3 The helium vessel relief valve is set at 5 psig and the burst disk, which is the primary relief mechanism, is set at 8 psig.

1.1.3.3.1 The relief valve is to allow for expected spikes of pressure during the initial cavity cooldown without rupturing the burst disk.

1.1.3.3.2 It was noted that there are normally open vacuum gate valves on each side of the 5-cell cavity that will interlock closed in 3 to 5 seconds if loss of vacuum is sensed in the ERL ring. This will prevent contamination and loss of vacuum in the 5-cell cavity if vacuum is lost in the ERL ring.

1.1.4 Piping and Instrumentation drawings were presented showing the location of the components: ballast tank, a vent line that splits off—one returns to the vacuum pump and the other part has a burst disk and the smaller 5 psig relief valve which has a lift check in series with it; the low pressure LHe Dewar which supplies the ballast tank and helium vessel; the pre-atmosphere Dewar which supplies the temperature transition intercept and power coupling; and a storage tank and compressor (both under construction).

1.1.4.1 The burst disks will have a connection to a 10” vent header and in case a disk bursts, the discharge will be piped out of the Bldg. 912 cave via a stainless steel cryovent line which goes to the wall and has support columns

1.1.5 The Beam Line UHV Vacuum Failure analysis considered two failure modes of a potential air leak: (1) a relatively small leak into the beam line, and (2) a catastrophic failure, such as the burst disk itself failing or someone opening the valve and having a catastrophic in-rush of air into the cavity.

1.1.5.1 For a small leak into the beam line, three parameters for a given leak rate were calculated: (1) the indicated pressure of the beam line at the warm ends; (2) the heat load as a function of the leak rate onto the cryomodule due to the leak; and (3) the time for the cavity to pump one standard atmosphere of gas.

1.1.5.1.1 Expressing this graphically, to pump one atmosphere of gas a tremendous leak rate on the order of 2-3 Torr liters/s would result in pressure of 1 micron and a heat load ~ 2 watts. The cavity will not go positive in warmup.

1.1.5.2 For catastrophic venting of the beam line vacuum while cold, total heat of 3,193 KJ is calculated by computing the heat required to: convert 700 liters of LHe to gas (1,770 KJ), raise the niobium cavity to 80 ^{o}K (869 KJ), and raise the titanium cryomodule vessel to 80 ^{o}K (554 KJ). Using the total heat along with the heat of vaporization for nitrogen (5.57 KJ/mole ^{o}K) and the nitrogen heat of fusion (0.36 KJ/mole ^{o}K), there will be 14.4 liters of solid air.

1.1.5.2.1 Looking at a slice of one convolution, the solid air as it melts would pool in the bottom of the convolution and will be difficult to remove.

1.1.5.3 Calculating the maximum outflow of air upon the cavity warming, there will be very little internal convective heat transfer between the warm ends and the cold cavity. Using a conservatively high heat transfer of 180 watts and 50 watts of background, the resulting outflow rate of 1.7 SCFM is estimated.

1.1.5.3.1 There is a 10 hour cycle time from room temperature to cooldown. Once there is a vacuum, almost half of the volume is drawn down just to get it down to 2 ^{o}K. A future plan is for long-term operation.

1.1.5.4 The question of whether any nitrous oxide would be formed in this cavity as it warmed up was addressed. There will be a fair amount of oxygen component in the mixture. There will not be an explosive or a high oxygen concentration. Radiation, which is not present, would be needed to make nitrous oxide.

1.1.6 Upstream of the ERL 5-cell cavity will be the ERL electron gun (10% LHe capacity of the ERL 5-cell cavity), still in design and to be reviewed by the LESHC.

1.1.6.1 The gun cryomodule is niobium and stainless steel and consists of a 52-liter capacity ballast tank mounted on a 17-liter capacity helium vessel. There will be two burst disks, two isolating gate valves, two fundamental power couplers, and a photocathode.

1.1.6.2 A Class IV laser will be shown into the beam pipe and when the laser impinges on the face of the cathode in the gun which excites the surface, electrons come off of it and create an electron beam.

1.1.6.2.1 A concern is that if there is a leak of cryogenic fluid or air liquefying into the space, the laser could begin to ionize and create nitrous oxide. Since the laser can cause ionization of the cathode, it could ionize the air.

1.1.6.3 The approach to determine the size of the burst disks and relief valves in the electron gun is the same as the approach used for the beam tube vacuum: same maximum allowable pressure, same calculation assumptions, and same relief scenarios.

1.1.6.4 The failure modes considered the following two air leaks into the beam tube vacuum and a helium leak from cavity breach:

1.1.6.4.1 A small air leak into the beam tube where air accumulates and freezes or liquefies and is released during warm-up of the cavity. The relief is located on the UHV beam line side.

1.1.6.4.2 A large air leak from air condensing on the beam line side of the cavity or boil-off of helium in the cavity. There will be a relief valve and burst disk on the LHe side similar to the 5-cell cavity.

1.1.6.4.3 A helium leak from cavity breach causes vaporization of helium with the liquid helium eventually wetting the area to the gate valves. There is heat transfer from the walls to helium. There is condensing of air on the surface outside of the insulating vacuum.

1.1.6.5 This is the first time that BNL will have to do Code-type weld testing on a non-ASME-accepted material, niobium. G. McIntyre consulted with S. Kane (Pressure Safety Subject Matter Expert) and set up a weld plan to comply with the Code by identifying all pressure boundary welds in the design and categorizing them by type (joint, angle, multi-pass) and material type and thickness.

1.1.6.5.1 Per the ASME code, three specimens of each material type need to be tested. The tests to be performed are: room temperature tensile, guide bend tests on the roof and face, Charpy V-Notch impact test at 77 ^{o}K, and fracture mechanic analysis.

1.1.6.5.2 G. McIntyre mentioned that S. Kane suggested that if a 6.5^{o} (shallow angle and most difficult) weld is executed and passes, if parameters are

written properly, the other three weld angles (13 ^{o}, 26 ^{o}, 30 ^{o}) should be able to be addressed with the 6.5^{o} angle.

1.1.6.5.3 Charpy V-Notch (CVN) impact testing will be done at 77 ^{o}K on the thickest material (worst case) of each weld group. Test criteria are not available and the CVN test indicates when the material will break. Once AES has this data, they can select an acceptable limit.

1.1.6.5.4 No one has identified the actual fracture limit for this material, but G. McIntyre found in the literature one analysis done by Los Alamos in the 1990s which provides one data point.

1.1.6.5.5 To verify the acceptable material performance at 2 ^{o}K, G. McIntyre will do a fracture mechanics analysis using an analytical model described in a paper written by S. Kane.

1.1.6.5.6 Material certifications will be obtained for all niobium used and the material will be QA traceable.

1.1.6.5.7 AES will develop welding procedures to BNL's specifications and BNL's certified welding supervisor (Al Farland, BNL Central Shops, certified by the American Welding Society) will approve these procedures.

1.1.6.5.8 AES' certified welders will run test welds on the same material as that used for the actual case and if the welds qualify, then AES will be able to do the welds on the electron gun.

1.1.6.5.9 The weld inspection plan is to radiograph all the welds. However, since the material used is in Division II, it is not clear whether radiographing all the welds is required or if ultrasound would be an acceptable alternative. Radiographing could be performed either by putting film on the inside and using an electron tube to irradiate the outside or wrapping the outside with film and putting a source on the inside.

1.2 The following motion related to the 5-cell cavity was crafted by the Committee:

1.2.1 The Committee accepts the cavity as a device that meets the equivalence protection requirements in 10CFR851 for vacuum rated pressure vessels provided the following issues are closed out:

1.2.1.1 As a steady-state solution was presented for the situation where LHe from the cavity leaks into the UHV internal volume, determine if there is an initial pressure impulse due to thermal mass of the material.

1.2.1.2 State the assumptions used for a reasonable leak rupture of the helium vessel into the vacuum through a solid piece of niobium.

1.2.1.3 Verify that the flex joints on the Helium vent line can take the thermal contraction or impulse. (See 1.1.4.1)

1.2.1.4 Determine if there should be an interlock on the laser in case vacuum on the gun is lost. (See 1.1.6.2)

1.2.1.5 Ensure that the welding procedures submitted by AES are approved by BNL's certified welding supervisor (Al Farland, BNL Central Shops, certified by the American Welding Society). (See 1.1.6.5.8)

1.2.1.6 Verify the extent of in-process welding and determine if the ASME Code allows the use of ultrasound rather than radiography to verify all the welds on the gun. (Mike Gaffney). (See 1.1.6.5.9)

1.2.2 J. Tuozzolo made a recommendation for approval of the Motion.

1.2.3 Seconded by Mike Gaffney.
1.2.4 The motion was approved by a vote of 7 in favor and none opposed.

2 The meeting was adjourned at 3:10 pm

Dear Ed,
The pressure relief of the ERL 5-cell cavity beam tube was not addressed in the Cryogenic System review by the LESHC in May 2006. The contract for the cavity was awarded in 2003. In a strict sense it does not fall under the latest requirements of February 2007's 10CFR1085, but I feel the Committee should review our approach, conclusions and remediation plan. The calculations were performed by Roberto Than and Robert Todd in close consultation with K.C. Wu. The attached files present calculations worked from the vacuum side and from the cryogenic system side.

Calculations for the cryogenic side examine a leak of liquid helium into the vacuum beamtube. Although this is the least likely scenario of the leak possibilities into the vacuum beam tube (the cavity has been cold shock to 2K no less than 6 times) it is the most dramatic. As the cold cavity fills, the warm ends of the cavity cause the liquid to vaporize and increase pressure. For the 5-cell cavity cryogenics test the cavity 'string" terminates in a gate valve at either end. The string is protected by SST burst disks. Although the calculations indicate a single burst disk would be sufficient a conservative approach will be taken, a second disk will be mounted to the cavity string. See attached file "010604017-CAL-01"

An examination of a condensing air leak into the cold cavity string is perform in the PowerPoint file "ERL SRF cryo safety..". Its conclusion determined that the helium cryo leak noted above is governing scenario.

Please ask the Committee to review the documents and their approach. Roberto, Rob and I would be happy to meet to review this work at the convenience of the Committee. Although this system is not scheduled for cold testing at BNL until July the sooner we can deal with any additional requirements. Thank you.

Regards,
Mac

Gary T. McIntyre
Group Leader, Collider Support
Collider-Accelerator Department
Brookhaven National Laboratory
Building 911A
Upton, New York 11973-5000
Office: 631-344-7037
e-mail: mac@bnl.gov

C-A D Engineering Design Support Documentation Cover Page

Document number: 010604017-CAL-01	
Title: Low Pressure Relief for 5 Cell Cavity Helium Side Volume	**Author**: Y. R. Than
Subject: ERL Cryogenic System	
C-A Department Group: Cryogenic Systems Group	**Checked by: D. Aized** **Approval**: Y. R. Than
Documentation Type **[ ] Written Technical Paper** **[x] Design Calculations** **[ ] Design Review Presentation** **[ ] Design Certification** **[ ] Specification** **[ ] Procurement Documenation** **[ ] Safety/ALARA Review Presentation** Other	**Equipment Type** **[ ] Magnets and Power Supplies** **[ ] Vacuum Systems** **[ ] RF Systems** **[x] Cryogenic Systems** **[ ] Experimental Equipment** **[ ] Beam Instrumentation** **[ ] Water Systems** **[ ] Buildings, Structures, and Shielding** Other
Equipment Location:	**Associated information for cataloging**
[ ] Tandem Van DeGraff	**[ ]** CA-D Design Room Job No.
[ ] Linac	
[ ] Booster	**[ ]** CA-D Design Room Drawing No
[ ] AGS	
[x] RHIC	**[ ]** CA-D Specification No
[ ] 912 Experimental Area	
[ ] 919 Experimental Area	**[ ]** CA-D Experiment No.
[ ] RHIC Experimental Area	
	[ ] Other
[ ] Buildings Structures, and Shielding	
Other	

BROOKHAVEN NATIONAL LABORATORY
COLLIDER-ACCELERATOR DEPARTMENT
CRYOGENIC SYSTEMS GROUP

Doc. No.: 010604017-CAL-01
Issued Date: _____
Rev. No. A_____
Rev. Date: _____

LOW PRESSURE RELIEF FOR 5 CELL CAVITY HELIUM SIDE VOLUME

Prepared by: _Roberto Than_____

Checked by: _Dawood Aized_____

Approved by: _Roberto Than_____

1 SUMMARY

1.1 Low Pressure Relief System

The low pressure relief is used to protect the Cavity for normal process relief and in the event of a catastrophic failure that leads to loss of vacuum to the cavity / helium volume.
The MAWP for the Cavity is 26 psia and for the ballast tank is 60 psig.

A 5 psig 2 inch check relief, Cv=50, is pipe in parallel to relief pressure excursion during normal operations, of 30 g/s flow, e.g.during cooldown.

A burst disk set at 8 psig is used to protect the vessels for the case of loss of vacuum.

1.2 Load

The load determined is approximately 60 kW.

1.3 Relief Pressure

The relief pressure will be set at 22.7 psia or 8 psig.

1.4 Relief Flowrate and Conditions

Since the relief pressure is subcritical, vapor is generated until the relief pressure has been reached.
At the relief pressure the vaporization rate is:

T	4.719 K
P	1.544 atm
Hfg	16669 J/kg
Duty	60800 W
Relief Rate	3.65 kg/s

1.5 Burst Disk

The relief is located off the cold vapor return line on an vacuum jacketed 4 inch line.
The relief valve discharges into a 10 inch diameter line vented to atmosphere.

Set pressure: 8 psig
Manufacturing Range: 0%
Burst Tolerance: 1/-15%
The 4 inch burst disk has a MNFA area of 12.7 inches square.

2 LOAD

The highest load case is for the loss of vacuum to air on the beam side of the cavity, that side of the cavity is a bare surface. Heat input is 60 kW for a conservative heat flux value of 38 kW/m^2. [Ref.1] A recent test on loss of vacuum to air on a bare superfluid vessel gave 31 kW/m^2. [Ref.2]

2.1 Cavity Beam Tube Side load

Cavity Area	1.6	m2
Flux	38	kW/m2
Duty	60.8	kW

2.2 Helium Vessel and Ballast Tank Load

Helium vessel			Ballast tank		
L	45	in	84	in	
D	16	in	24	in	
Area	2262	in2	7238	in2	
		1.46			4.67 m2
					6.13 m2
			Flux		6 kW/m2
			Qtotal		36.8 kW

3 SIZING

3.1 Flow resistance method

DPtotal	0.440	atm
DPtotal	6.466	psid

	DP	DP	Dia	L	K	T	P	W
	atm	psid	inch	m		K	atm	g/s
Pipe	0.0013	0.0190	**4.26**	**0.305**	**0**	4.72	1.544	**3647**
LR elbow	0.0055	0.0811	**4.26**	**1.299**	**0**	4.72	1.543	**3647**
Pipe	0.0020	0.0288	**4.26**	**0.457**	**0**	4.72	1.538	**3647**
Branch	0.0285	0.4194	**4.26**	**0.000**	**1**	4.72	1.536	**3647**
Pipe	0.0021	0.0303	**4.26**	**0.457**	**0**	4.72	1.507	**3647**
LR elbow	0.0059	0.0862	**4.26**	**1.299**	**0**	4.72	1.505	**3647**
Pipe	0.0083	0.1225	**4.26**	**1.829**	**0**	4.72	1.499	**3647**
LR elbow	0.0060	0.0881	**4.26**	**1.299**	**0**	4.72	1.491	**3647**
Pipe	0.0085	0.1252	**4.26**	**1.829**	**0**	4.72	1.485	**3647**
LR elbow	0.0061	0.0900	**4.26**	**1.299**	**0.000**	4.72	1.476	**3647**
Pipe	0.0029	0.0426	**4.26**	**0.610**	**0.000**	4.72	1.470	**3647**
Pipe	0.0015	0.0214	**4.26**	**0.305**	**0.000**	4.72	1.467	**3647**
Burst disk	0.0317	0.4652	**4.02**	**0.000**	**0.790**	4.72	1.466	**3647**
4"PIPE	0.1810	2.6599	**4.26**	**0.305**	**0.012**	280.00	1.434	**3647**
Inlet to header	0.0994	1.4610	**10.42**	**0.000**	**1.000**	280.00	1.253	**3647**
LR elbow	0.0077	0.1128	**10.42**	**1.299**	**0.000**	280.00	1.154	**3647**
Pipe	0.0417	0.6130	**10.42**	**7.012**	**0.000**	280.00	1.146	**3647**

3.2 Coefficient of Discharge Method , Vapor generation of 0.13 m3/s at 4.8K.

$Q_{total} := 60800 \cdot W$ $\quad M_{he} := 0.0040026 \cdot \frac{kg}{mol}$ $\quad R_u := 8.314472 \cdot \frac{joule}{mol \cdot K}$ $\quad g_c := \frac{1 \cdot kg \cdot m}{N \cdot s^2}$

$P_{rel} := 1 \cdot atm + 8 \cdot psi = 1.544 \cdot atm$ $\quad T_{rel} := T_{satV.he}(P_{rel}) = 4.717 K$

$h_{fg} := h_{PsatV.he}(P_{rel}) - h_{PsatL.he}(P_{rel}) = 1.667 \times 10^4 \cdot \frac{J}{kg}$ $\quad m_{rel} := \frac{Q_{total}}{h_{fg}} = 3.647 \frac{kg}{s}$

$T_1 := T_{rel}$ $\quad P_1 := P_{rel}$ $\quad P_1 = 22.696 \cdot psi$ $\quad P_2 := 1.05 \cdot atm$

$\gamma_{sub} := \gamma_{he}(P_1, T_1) = 4.724$ $\quad Z_v := Z_{he}(P_1, T_1) = 0.576$ $\quad K_d := 0.62$

$$F_{sub} := \sqrt{\frac{2 \cdot \gamma_{sub}}{\gamma_{sub} - 1} \cdot \left[\left(\frac{P_2}{P_1}\right)^{\frac{2}{\gamma_{sub}}} - \left(\frac{P_2}{P_1}\right)^{\frac{\gamma_{sub}+1}{\gamma_{sub}}} \right]} = 0.752$$

$D2 := \rho_{PsatV.he}(P_{rel})$

$D2 = 27.725 \frac{kg}{m^3}$

$$A_{sub} := \frac{m_{rel} \cdot \sqrt{T_1 \cdot Z_v} \cdot \sqrt{R_u}}{K_d \cdot P_1 \cdot F_{sub} \cdot \sqrt{M_{he}} \cdot \sqrt{g_c}}$$

$A_{sub} = 37.573 \cdot cm^2$ $\quad A_{sub} = 5.824 \cdot in^2$

$$Volrate := \frac{A_{sub} \cdot K_d \cdot F_{sub} \cdot T_1^{0.5} \cdot \sqrt{R_u \cdot Z_v}}{M_{he}^{0.5}}$$

$Volrate = 0.132 \frac{m^3}{s}$

4 RELIEF DEVICE SPECIFICATION: BURST DISK

RELIEF DEVICE SPECIFICATION SHEET									
PROJECT	ERL			.P & I D drawing no				10604017	
SYSTEM	CET Cryo system			Equipment No.					
				Line No.					
GENERAL / BASIS OF SELECTION									
Vessel/Equipment/Pipe being protected			5 cell cavity and Ballast tank						
TAG NUMBER	BD02519H				CODE / Standards	ASME VIII			
SERVICE	Vessel Relief				Lost of Vacuum/ Thermal/Fire/Process	Lost of beamtube vacuum			
Type (Safety / Process	Process				Other				
Protected Volume	0	m^3		ft^3	Heat of Vaporization	16520.9	J/kg		
Heat input	0	W	0	Btu/hr	Expansivity Coef	5.065			
Heat Transfer Area	1.6	m^2	17.21	ft^2	Cp	14769.3	J/kg-K		
Heat input Evaporation	60000	W	204739	Btu/hr	Initial Quality X	0.99			
Sensible Vol. Expansion Rate	0E+00	m^3/s	0.0	ft^3/min	Initial Pressure	1.54	atm	22.696	psia
Evaporation Vol. Rate	0.13099	m^3/s	277.3	ft^3/min	initial Temperature	4.72	K	8.490	°R
Total Volumetric Rate	1.31E-01	m^3/s	277.3	ft^3/min	initial Density	27.928	kg/m3	1.741	lb/ft^3
ORIFICE AREA / SERVICE CONDITIONS									
Fluid / ID	Helium-4		10		Req'd capacity mass flow	3.63	kg/s	7.990	lb/s
State	Gas								
Mol Weight	4.0026	g/mol			Calculated Area	37.412	cm2	5.799	in2
Density @ T,P relief	27.725	kg/m3	1.729	lb/ft^3	Calculated Kv / Cv	106.00		124.27	
Operating Pressure	0.03	atm	0.44	psia	Calculated Air capacity @Prelief @ STP	2365.53	Nm^3/hr	1392.12	SCFM
Normal Operating Temp	2	K	3.6	°R	K factor	0.62			
Set Pressure	1.544	atm	22.696	psia	Selected Area	81.94	cm2	12.7	in2
Relief Temperature	4.72	K	8.491	°R	Orifice Letter				
% Allow over pressure	0%				Air capacity @Prelief @ 15°C/60°F, 1 atm	5183.1	Nm^3/hr	3049	SCFM
Relief Pressure	1.54437	atm	22.696	psia	Kv / Cv capacity	0.00		0	
Back pressure + 1 atm	1.05	atm			MNFA	81.94	cm2	12.7	in2
Ratio of Specific Heats,k	4.72425				Manufacturing Tolerance	0%			
Compressibility factor, Z	0.57604				Burst Tolerance	15%			
MANUFACTURER / CONSTRUCTION / MATERIALS									
Manufacturer	BS&B								
Model No.	LPS				Springs				
Body Bonnet					Pilot		-		
Seat & Disc									
Resilient Seat Seal					Burst Disk Material	SS316			
Guide & Rings					Holder Material	SS316			
OPTIONS									
Inlet Size and type	4"NPS				Flange or Ends	ANSI			
					Rating and type	150#			
Outlet Size and type	4"NPS				Flange or Ends	ANSI			

5 RELIEF DEVICE SPECIFICATION: 5 psig 2 inch PROCESS RELIEF

RELIEF DEVICE SPECIFICATION SHEET									
PROJECT	ERL			.P & I D drawing no				10604017	
SYSTEM	CET Cryo system			Equipment No.					
				Line No.					
GENERAL / BASIS OF SELECTION									
Vessel/Equipment/Pipe being protected			BALLAST Tank Process Relief						
TAG NUMBER	H10940R				CODE / Standards	B31.3			
SERVICE	Process relief				Lost of Vacuum/ Thermal/Fire/Process	Process			
Type (Safety / Process	Process				Other	Process, Cooldown			
Protected Volume	0	m^3		ft^3	Heat of Vaporization	18326.5	J/kg		
Heat input	45000	W	153555	Btu/hr	Expansivity Coef	0.999			
Heat Transfer Area	0	m^2	0.00	ft^2	Cp	5193.0	J/kg-K		
Heat input Evaporation	0	W	0	Btu/hr	Initial Quality X	1.00			
Sensible Vol. Expansion Rate	1E-01	m^3/s	280.6	ft^3/min	Initial Pressure	1.34	atm	19.696	psia
Evaporation Vol. Rate	0	m^3/s	0.0	ft^3/min	initial Temperature	288.00	K	518.400	°R
Total Volumetric Rate	1.33E-01	m^3/s	280.6	ft^3/min	initial Density	0.227	kg/m3	0.014	lb/ft^3
ORIFICE AREA / SERVICE CONDITIONS									
Fluid / ID	Helium-4		10		Req'd capacity mass flow	0.030	kg/s	0.066	lb/s
State	Gas								
Mol Weight	4.0026	g/mol			Calculated Area	4.690	cm2	0.727	in2
Density @ T,P relief	0.227	kg/m3	0.014	lb/ft^3	Calculated Kv / Cv	13.29		15.58	
Operating Pressure	0.03	atm	0.44	psia	Calculated Air capacity @Prelief @ STP	228.76	Nm^3/hr	134.62	SCFM
Normal Operating Temp	2	K	3.6	°R	K factor	0.62			
Set Pressure	1.340	atm	19.696	psia	Selected Area	0.00	cm2	0	in2
Relief Temperature	288.06	K	518.506	°R	Orifice Letter				
% Allow over pressure	0%				Air capacity @Prelief @ 15°C/60°F, 1 atm	749.2	Nm^3/hr	441	SCFM
Relief Pressure	1.340	atm	19.696	psia	Kv / Cv capacity	43.50		51	
Back pressure + 1 atm	1.05	atm			MNFA	0.00	cm2	0	in2
Ratio of Specific Heats,k	1.6665				Manufacturing Tolerance				
Compressibility factor, Z	1.00064				Burst Tolerance				
MANUFACTURER / CONSTRUCTION / MATERIALS									
Manufacturer	Circle Seal								
Model No.	259-B				Springs				
Body Bonnet	Brass				Pilot		-		
Seat & Disc	Teflon								
Resilient Seat Seal					Burst Disk Material				
Guide & Rings					Holder Material				
OPTIONS									
Inlet Size and type	2"NPS				Flange or Ends	FNPT			
					Rating and type				
Outlet Size and type	2"NPS				Flange or Ends	FNPT			

6 Burst Disk Info

LPS™ Rupture Disk

The LPS Rupture Disk was developed to provide low burst pressures from 5 psig (0.35 barg) using reverse buckling rupture disk technology. The LPS Rupture Disk, combined with the SRB-7RS® Safety Head, provides accuracy and reliability. The LPS uses SAF™ technology (Structural Apex Forming™) enabling very low burst pressures to be achieved with excellent opening characteristics.

LPS Rupture Disk

LPS Rupture Disk Material Options

The LPS Rupture Disk is available in a range of corrosion resistant materials (see table on opposite page for details).

Standard disk materials are Nickel alloy 200, Stainless Steel grade 316, Inconel® (Nickel alloy 600), Monel® (Nickel alloy 400), Hastelloy® C-276, & Tantalum.

The LPS disk includes an outlet side hinge to control fragmentation. Standard disk hinge material is Stainless Steel grade 316 with alternates available upon request.

Tef liners are offered with the type LPS Rupture Disk at burst pressures of 35 psig (2.4 barg) and higher.

Flow Performance/K_R Values/Rupture Disk Sizing

Flow resistance factor, "K_R," may be used to determine the relieving capacity of a system when using techniques such as those described in Crane Technical Paper No. 410. Individual K_R values have been established for both gas & liquid service for the LPS disk. These are experimentally determined at the BS&B Safety Systems, L.L.C. flow laboratory following ASME procedures and witnessed by ASME representatives. Care must be taken to use the correct value for sizing purposes. When K_R values are marked on the LPS disk tag, those for gas service are shown as "K_{Rg}," and those for liquid service are shown as "K_{Rl}."

When using K_R value for sizing calculations, the nominal pipe size (assuming schedule 40 pipe), of the vent system is used. When using "coefficient of discharge" sizing techniques, the Minimum Net Flow Area or Net Relief Area of the rupture disk device is used.

MNFA Values and NRA Values

Disk Size		MNFA	NRA
in	mm	(in^2)	(cm^2)
1	25	0.86	4.90
1 ½	40	1.93	11.30
2	50	3.36	19.70
3	80	7.39	40.80
4	100	12.74	69.70
6	150	28.89	158.60
8	200	50.00	275.60

MNFA is expressed in square inches to facilitate sizing calculations in line with ASME practice. NRA is expressed in square centimeters for use when sizing in line with ISO, European Standards and forthcoming CEN practice.

APPENDIX A, SECTION I: Relief devices sizing

I-1 Methods for sizing burst disk area

Flow Resistance method

This method is the same method used for carrying out pressure drop calculations for a piping system, with the relief device modeled with a specified K factor.

$$\Delta P = \sum \frac{\rho \cdot U^2}{2} \frac{f}{L_{pipe} \cdot D} + \sum \frac{\rho \cdot U^2}{2} \cdot K_{component}$$

Note that the typical K value for an orifice can be confirmed if the orifice equation is rewritten in the following form:

$$\Delta P = P1 - P2 = \frac{1}{C^2 Y^2} \frac{\dot{m}^2}{2A^2 \rho_1} = \frac{1}{C^2 Y^2} \frac{\rho \cdot U^2}{2}$$

When compressibility effects are small Y=1 and Cd =0.62 is used (high Reynolds number flow and small beta β, orifice to pipe diameter ratio), a K value of 2.6 is obtained (=K for thin wall orifice).

I-2 Coefficient of Discharge Method

With the Coefficient of Discharge Method, the rupture disk is treated as a relief device with the flow area calculated utilizing orifice formulas and a fixed coefficient of discharge (Flow coefficient), 'Kd', of 0.62 if using ASME code. This method does NOT explicitly take into account piping so there are restrictions in its use. These restrictions are known as the "8 & 5 Rule" which states that in order to use this method to size the rupture disk all of the following four conditions must be met[:

1. The rupture disk must be installed within 8 pipe diameters of the vessel.
2. The rupture disk discharge pipe must not exceed 5 pipe diameters.
3. The rupture disk must discharge directly to atmosphere.
4. The inlet and outlet piping is at least the same nominal pipe size as the rupture disk.

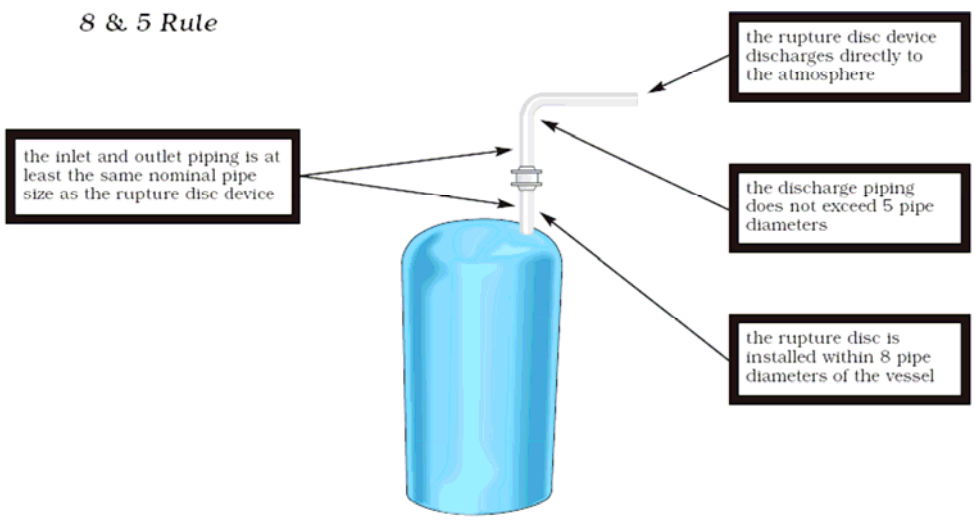

The flow area calculated with this method is called the Minimum Net Flow Area or MNFA. The MNFA is the rupture disk's minimum cross sectional area required to meet the *needed* flow. This is not the area (and thus the size) you specify. Just like a pipe with a nominal size and an actual inside diameter, the rupture disk has a nominal size and an actual Net Flow Area or NFA. The rupture disk purchased must have a NFA equal to or greater than the MNFA. The manufacturer publishes the NFA for every rupture disk model and size they sell. The NFA also accounts for bursting characteristics of the disk and the holder.

2.1 Relief free flow area and flowrates

The burst disk equation is basically the orifice equation. ASME sets the 0.62 value which is based on a conservative orifice diameter to pipe diameter ratio of β of 0.4 and fully developed flow with Reynolds number larger than 10^5.

General equation any consistent units:

$$F = \sqrt{\frac{2\cdot\gamma}{\gamma-1}\left[\left(\frac{P2}{P1}\right)^{2/\gamma} - \left(\frac{P2}{P1}\right)^{\gamma+1/\gamma}\right]} \ldots\ldots\ldots for.subsonic\ldots flow$$

$$F = \sqrt{\gamma\left[\left(\frac{2}{\gamma+1}\right)^{\frac{\gamma+1}{\gamma-1}}\right]} \ldots\ldots\ldots for\ldots choked\ldots\ldots flow.$$

$$.A = \frac{\dot{m}\sqrt{T\cdot Z}\cdot\sqrt{R_u}}{K\ \cdot P_1\cdot F\cdot\sqrt{M}\cdot\sqrt{g_c}}$$

$$A = \frac{\dot{V}\cdot\sqrt{M}}{K\ \cdot F\cdot\sqrt{Z}\cdot\sqrt{T}\sqrt{R_u}\sqrt{g_c}}$$

Note API-RP520 and ASME gives the formulas in a different format than the above, but they are identical.
The API formula has separate formulas for subsonic and choked flow. ASME only gives formula for choked flow.

$$F_2 = \sqrt{\frac{\gamma}{\gamma-1}\left(\frac{P2}{P1}\right)^{2/\gamma}\left[\frac{1-\left(\frac{P2}{P1}\right)^{\gamma-1/\gamma}}{1-\left(\frac{P2}{P1}\right)} - \right]} \ldots\ldots\ldots for.subsonic\ldots flow\ldots\ldots API520\ldots.equation$$

$$.A = \frac{\dot{m}\cdot\sqrt{R_u}}{K\ \cdot F_2\sqrt{g_c}}\sqrt{\frac{Z\cdot T}{M\cdot P_1\cdot(P_1-P_2)}}$$

$$C = \sqrt{\frac{g_c}{R_u}}\sqrt{\gamma\left[\left(\frac{2}{\gamma+1}\right)^{\frac{\gamma+1}{\gamma-1}}\right]} \ldots\ldots\ldots for\ldots choked\ldots\ldots flow\ldots\ldots ASME..or.API520$$

$$A = \frac{\dot{m}}{C\ \cdot K\cdot P_1}\sqrt{\frac{Z\cdot T}{M}}$$

$\dot{m}$: mass flow
$\dot{V}$: Volumetric flow rate
M: Molecular weight

T_1: Inlet temperature
Z: Compressibility factor
F: Net Expansion Flow factor
F_2: Net Expansion Flow factor subsonic flow API equation
C: Gas flow constant
K: Flow Coefficient or Effective Discharge coefficient, from manufacturer; ASME use K =0.62 for rupture device
P1: Inlet pressure
P2: downstream or back pressure
A: Discharge Area
γ: Ratio of specific heats
g_c: Conversion constant: for SI units 1 kg-m/N-s^2 = 1,
R_u: Universal Gas Constant: any 8.314472 J/mol-K

7 REFERENCES

1. Lehmann and Zahn, "Safety Aspects for LHe Cryostats and LHe Transport Containers", ICEC7, London, 1978.
2. Hewitt, G.F., Shires,, G.L., Bott, T.R., *Process Heat Transfer*, CRC Press Begell House, 1994.
3. Crane, Flow of Fluids through Valves, Fittings, and Pipe. Crane Co., Copyright 1969.
4. Stephen M. Harrison, “Loss of vacuum on a super fluid helium vessel”, 17th International Conference on Magnet Technology, IEEE Transaction on Applied Superconductivity, March 2002, Vol. 12, No 1.
5. Perry, Robert H. and Green, Don W. (1984). *Perry's Chemical Engineers' Handbook*, Sixth Edition, McGraw Hill. ISBN 0-07-049479-7.
6. API Recommended Practice 520
7. ASME Section Boiler and Pressure Vessel Code
8. Technical Bulletin TB 8102, “Rupture Disk Sizing”, Fike Corporation

BURST TEST CERTIFICATE
& CERTIFICATE OF CONFORMANCE

ASME VIII DIV I

CUSTOMER:	BS&B TULSA	DATE:	04/02/2008
	7455 EAST 46TH STREET	P.O. NUMBER:	BNL-0000130433
	PO BOX 470590	BS & B LOT NO:	A8000495-1
	TULSA, OKLAHOMA,	SIZE:	4" DN 100
	OK -74147	TYPE:	LPS
	United States Of Ame	HOLDERTYPE:	S
QTY. OF UNITS SHIPPED:	3	MATERIAL:	316,316
QTY. OF UNITS TESTED:	2	HEAT NOs:	7460548

We certify that the Rupture Discs covered by this data have been manufactured, inspected, tested and packaged in accordance with the purchase order requirements.
Test results are on file available for examination.

BURST TEST RESULTS

NUMERICAL VALUE	PRESSURE UNIT	@TEMPERATURE
7.6, 7.6,	psi(G)	72° F

RATED RUPTURE

NUMERICAL VALUE	PRESSURE UNIT	@TEMPERATURE
8.0,	psi(G)	72° F

OTHER DETAILS:-

TAG NUMBERS:

MNFA: 12.740 IN^2

Kr(G) : 0.79

Per Pro BS & B Safety Systems Ltd.

Quality Assurance Department

BS&B SAFETY SYSTEMS; BAY G-1, RAHEEN BUSINESS PARK, LIMERICK, REPUBLIC OF IRELAND . Tel No: + 353-61-484700 FaxNo.:+353-61-227987

Stahlwerk Ergste Westig GmbH
Postfach 20 40
D-59412 UNNA

Zapp Precision Strip, Inc.
266 Barnet Blvd.
Dartmouth, MA 02745
Phone +1 508-998-6300
Fax +1 508-998-6310
Tollfree 888-647-3700
www.zapp.com

Member of the Zapp Group

November 02, 2006

Inspection Certificate No. 2210001526000010 01

Your purchase Order	1510000200 dated 28.09.2006		
Sales Order	2202000374	Delivery Note	2210001526
Production Lot	1824959	Inspection Lot	020000136154
Item	10	STAINLESS STEEL	
Grade / Alloy	SS316L		
Dimensions	0.0050 " X 36.0000 "		
Thickness tolerance	-0.00025 " / 0.00025 "		
Width tolerance	0.00000 " / 0.37500 "		
Conditions	Annealed		
Surface	Bright Anneal		
Specifications	AMS 5507F / AMS 5524K / ASTM A 240 / A 240-06		
Ident-No	8700158		
Quantity / Weight	2.550,000		

Chemical composition Heat 7460548

C (%)	Si (%)	Mn (%)	S (%)	P (%)	Cr (%)
0,020	0,510	1,41	0,0010	0,0220	16,50
Ni (%)	**Mo (%)**	**Cu (%)**	**N (%)**		
10,25	2,16	0,210	0,025		

Quality inspection results

Tensile Strength 97.8 KSi
.2% Yield Strength 44.6 KSi
Elong. 2" 60.40%
Bend Passed
Corrosion Passed
Grain 9.0
Hardness Rb 82

In compliance with the conditions mentioned in the acknowledgement of order:
Sizes and surface: without objection
Quality identification test: without objection
This certificate has been issued by computer and is valid without signature.

ZPS / GENE SHELDON +1 508-998-6300

Batch D001245004

BS&B SAFETY SYSTEMS, L.L.C.

CERTIFICATE OF CONFORMANCE

SAFETY HEAD

02/06/2008

Customer:	BROOKHAVEN NATIONAL LABORATORY
P.O.Number:	BNL-0000130433
BS&B Lot:	A8000495-2

We certify that the items described in this document have been manfactured, inspected and tested in accordance with the standards applicable to our industry. The original test data is on file and available for your examination.

Type:	SRB-7RS
Size:	4 Inch
Quantity:	1
Assembly Number:	GW-0-0068-042
Flange Rating:	150/300 ANSI
Material I / L:	316
Material O / L:	316

Attachments: N/A

Tab Marking: N/A

BS&B Safety Systems , LLC

QA/QC DEPARTMENT

BS&B Safety Systems, L.L.C. • 7455 E. 46TH Street • P.O. Box 470590 • Tulsa, OK 74147-0590
Phone 918/622-5950 • Fax 918/665-3904
Email sales@ bsbsystems.com • Website www.bsbsystems.com

ERL 5-Cell SRF Beam Line Vacuum Failure Analysis

R. Todd

Beam Line Vacuum Failure

- Two failure modes
  - Small leak into beam line and cryopumped by cold surfaces of SRF cavity.
  - Catastrophic venting of beamline while cold resulting in significant solid air formation on the cold surfaces of the SRF cavity.

CRYOMODULE CONFIGURATION

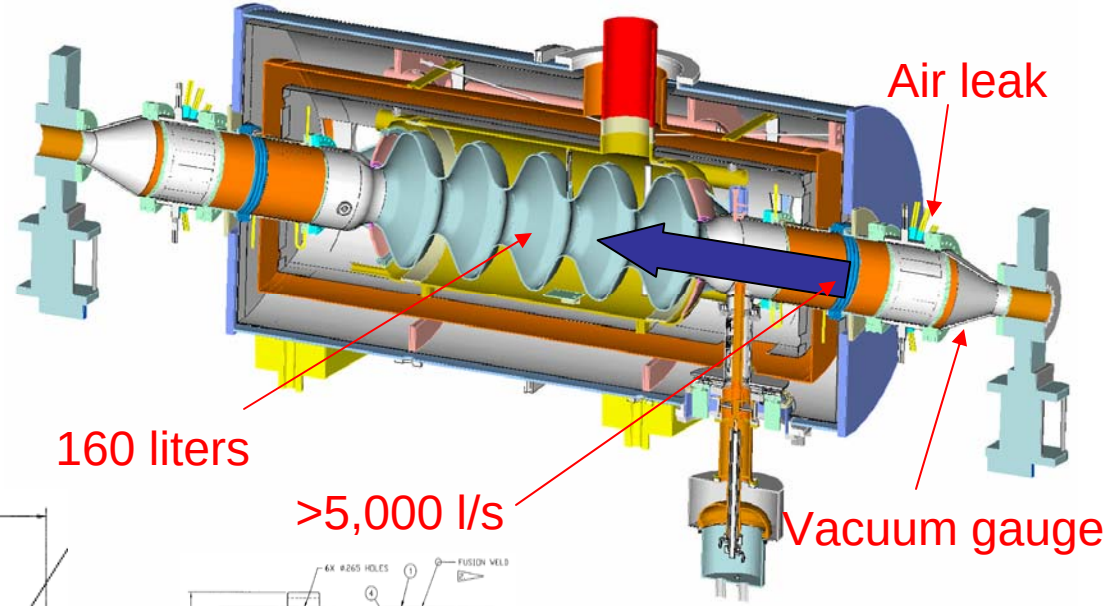

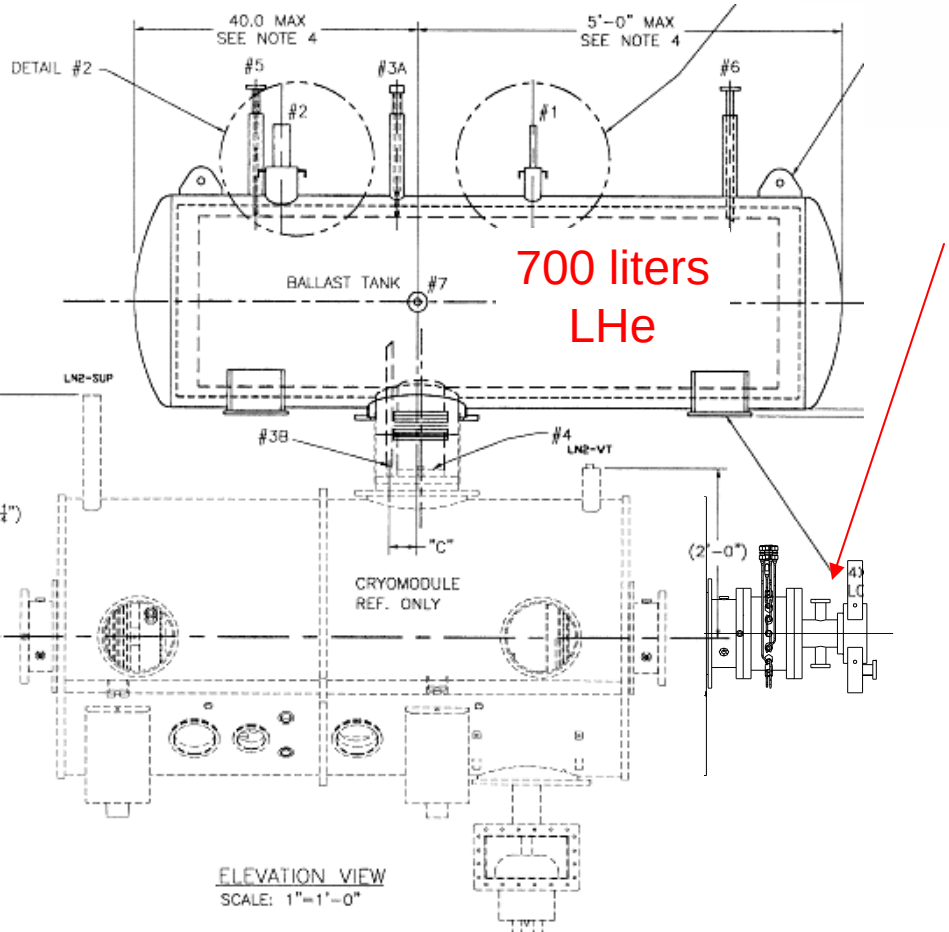

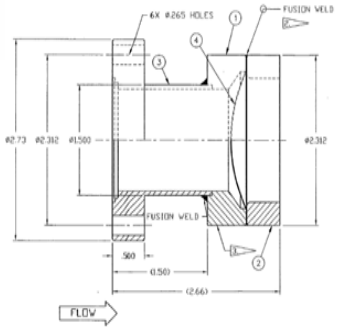

Burst disk
One on each end

Nb cavity 82 Kg
Ti He vessel 63.5 Kg
Therm. Trans. 29.5 Kg ea
Adaptors 31.3 Kg ea
Valves 35.4 Kg ea
Fe Abs 31.8 Kg ea
Surface area warm ends (2x) 1×10^4 cm^2
String volume (valve to valve) 160 liters

Small leak into beam line envelope.

- For a given leak rate, calculate:
  - Indicated pressure of beam line at warm end.
    - Calculate speed of cavity
      - » S = 11.6 A , 5300 l/s
    - Calculate Pressure as a function of leak size.
      - » P= Q/S, where Q leak rate (Torr l/sec)
  - Heat load on cavity due to leak.
    - Using nitrogen heat capacity Cp = 29 J/mol K
      - » H(watts) = 0.511Q
  - Time for cavity to pump one STP volume of gas.
    - Calculate volume of string assembly
      - » 160 liters = $1.2e^5$ Torr liters
      - » Time (hrs) = 33.9 / Q
  - Express graphically

Pressure, Throughput and Heat Load as a Function of Air Leak Rate

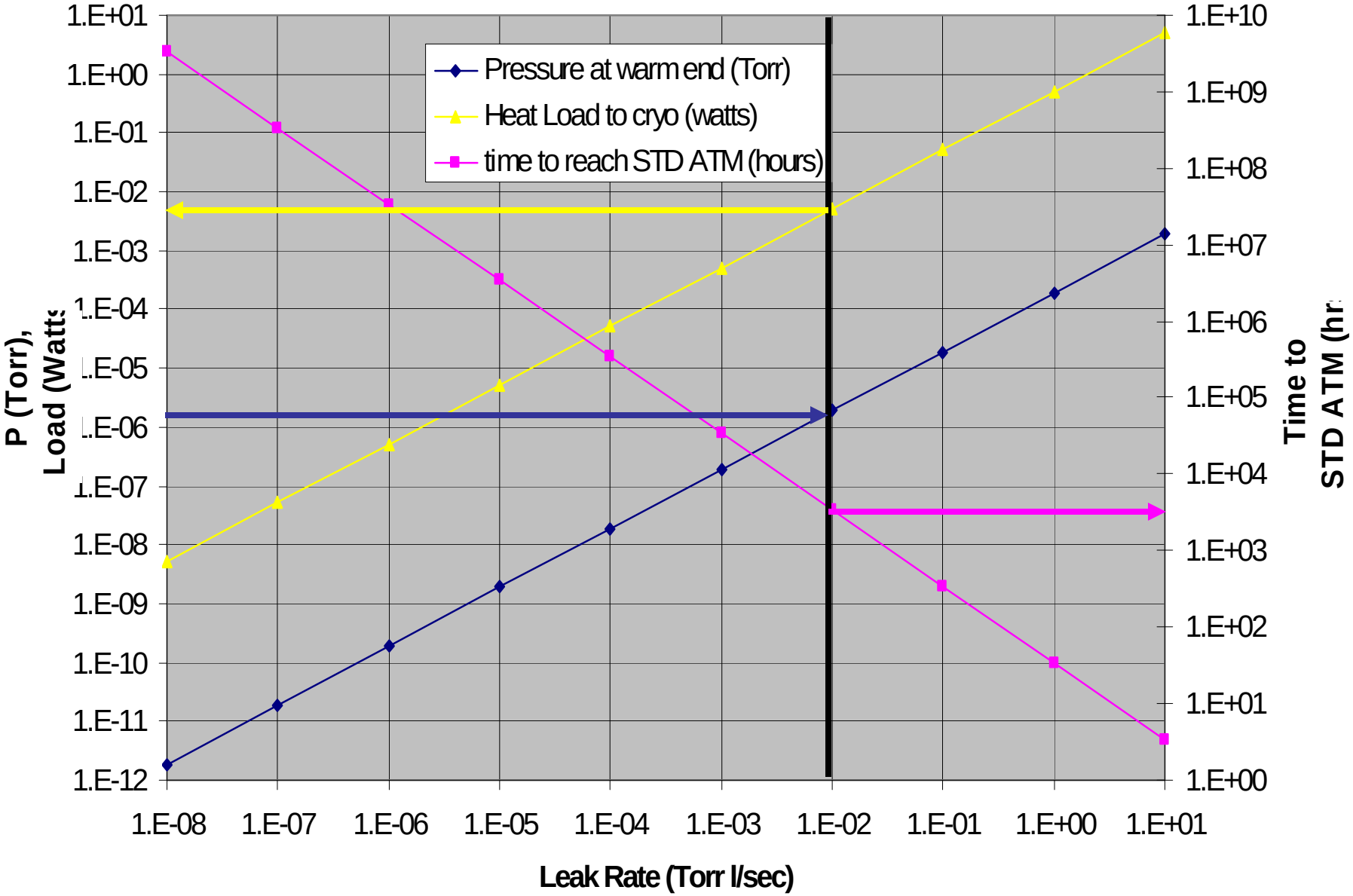

Summary

- In the event of leaks > $1x10^{-2}$ Torr l/s, cold cathode gauges and sputter ion pumps will indicate higher than normal pressures in the range of $1x10^{-6}$ Torr or higher.
  - At this pressure it will take > 1000 hrs (~40 days) to pump a std atm string volume.
  - The cavity will not perform with this quantity condensed on the surface.
  - Because a standard operating cycle for the cavity is 10 hours, the cavity string will not rise above 1 atm upon warm-up.

Catastrophic Venting of Beam Line Vacuum While Cold.

- Calculate quantity of air cryopumped by cold cavity.
  - Calculate total heat required to evaporate helium (convert to gas) and raise temp of cavity to 80K.
    - Heat required to convert liquid to gas
      - Using
        - » He heat of vaporization (0.0829 KJ/mole)
        - » 700 liters LHe, 85.4 Kg
    - 1,770 KJ
    - Heat required to raise Nb cavity to 80K
      - Using
        - » Cp (Nb, 80K) = 0.133 J/g K
        - » Debye temp of 275
        - » Nb Cavity mass 82 Kg
    - 869 KJ
    - Heat required to raise Ti vessel to 80K
      - Using
        - » Cp (Ti, 80K) = 0.109 J/g K
        - » Debye temp of 380
        - » Ti vessel mass 63.5 Kg
    - 554 KJ
    - Total heat = 3193 KJ

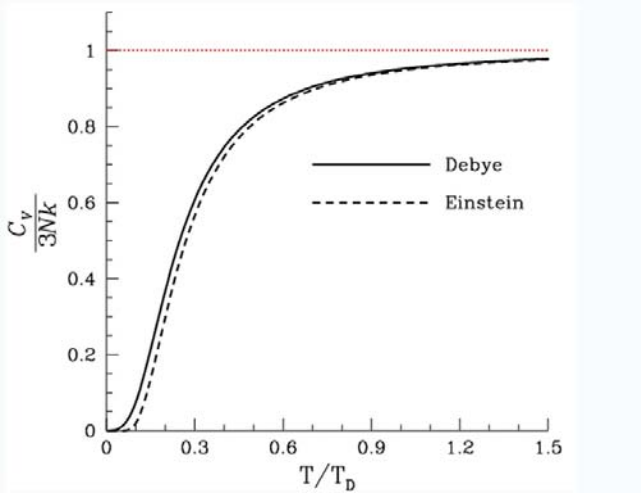

Catastrophic Venting of Beam Line Vacuum While Cold.

- Using
  - nitrogen heat of vaporization, 5.57 KJ/mole K (O_2; 6.82)
  - Nitrogen heat of fusion 0.36 KJ/mole K (O_2; 0.44)
  - Total heat of 3193 KJ
    - For nitrogen only; 15,102 grams, 17.4 liters LN_2
    - Using higher latent heats for oxygen would reduce this number
- Capacity of five cavity convolutions

  » 14.4 liters
  - Most liquid will pool in convolutions

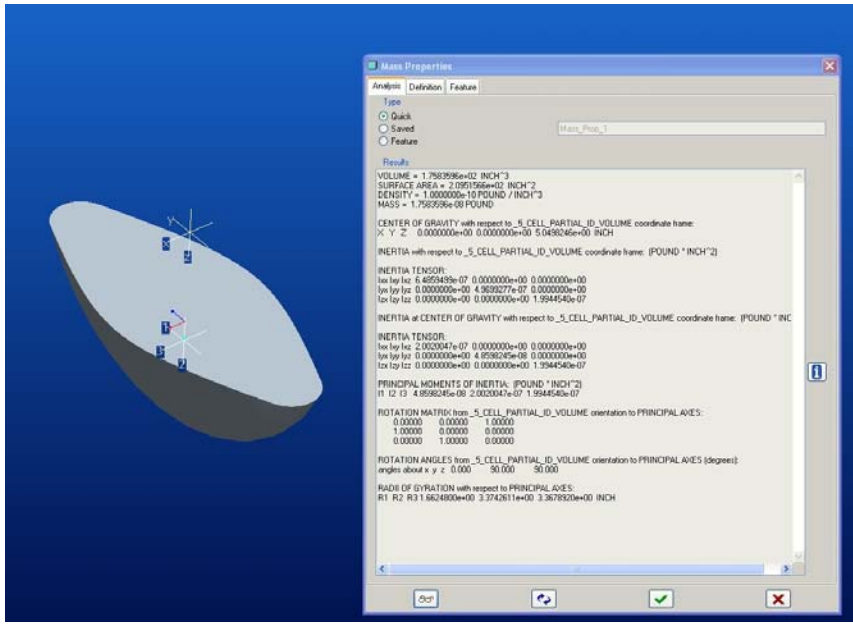

Catastrophic Venting of Beam Line Vacuum While Cold.

- Calculate maximum outflow rate of air upon cavity warming.
  - Once equilibrium is reached, melting and evaporation of solid air will be driven by heat load generated from gas convection due to warm ends.
    - Calculate heat load due to gas convective heating from warm ends using general form of the free convection formula for laminar flow in unconfined space.
      - » 180 Watts.
      - » Conservative because enclosed air space would yield a lower convective heat load.
      - » Assume additional background heat load of 50 Watts
      - » Use total heat load of 230 Watts.
    - Calculate maximum outflow rate.
      - » Use nitrogen heat of fusion 0.72 KJ/mole to calculate conversion rate to liquid.
      - » Although solid air will pool in convolutions, conservatively assume all melting air is instantaneously converted to 300K gas at the warm ends due to high heat capacity (37,500 KJ). The yields the highest possible flow rate.
      - » 1.7 CFM

Catastrophic Venting of Beam Line Vacuum While Cold.

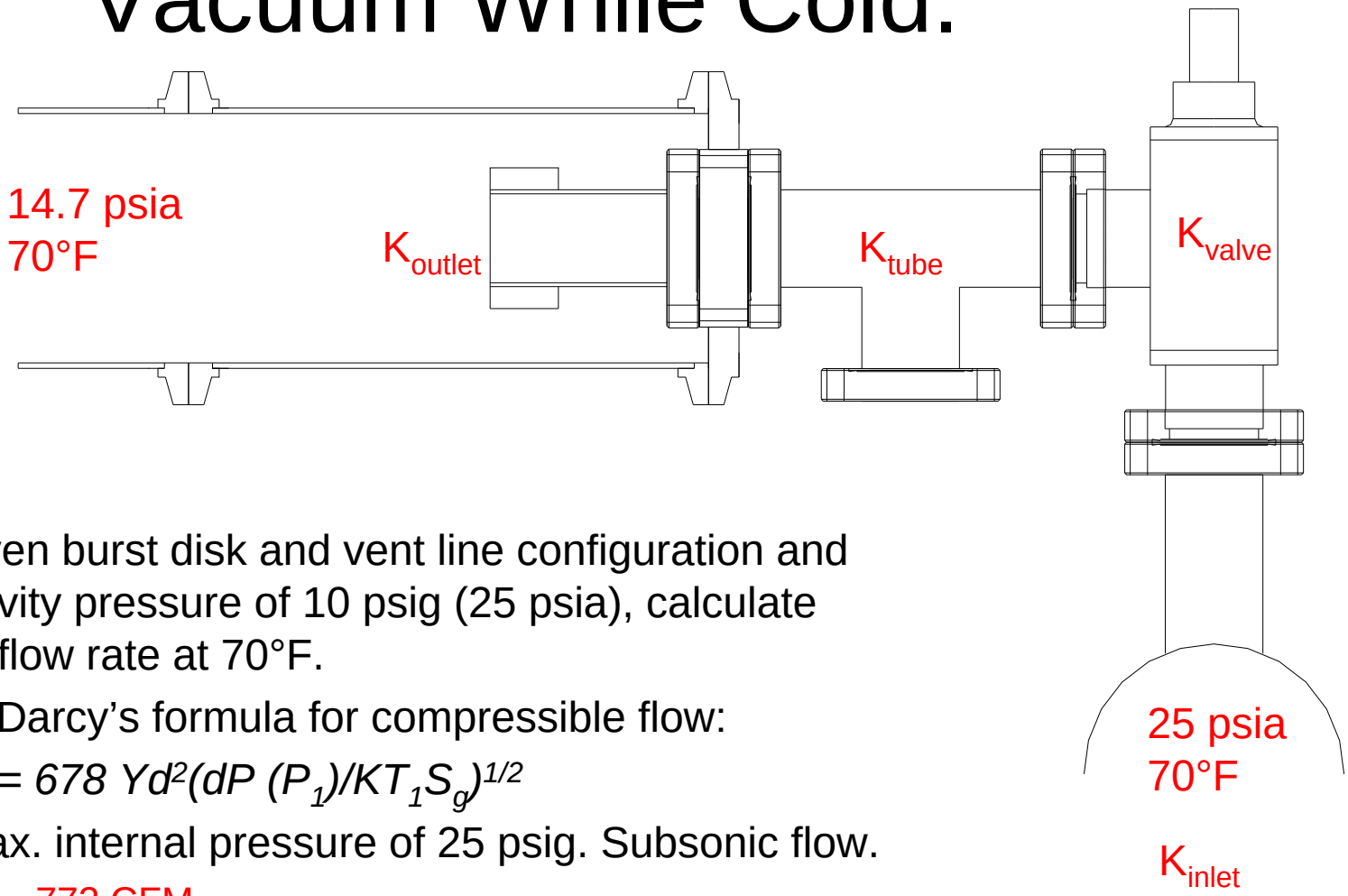

- For the given burst disk and vent line configuration and internal cavity pressure of 10 psig (25 psia), calculate maximum flow rate at 70°F.
  - Using Darcy's formula for compressible flow:
    - $q_m = 678\ Yd^2(dP\ (P_1)/KT_1S_g)^{1/2}$
    - Max. internal pressure of 25 psig. Subsonic flow.
      - 772 CFM

RT Gas Flow Rate vs. heat load

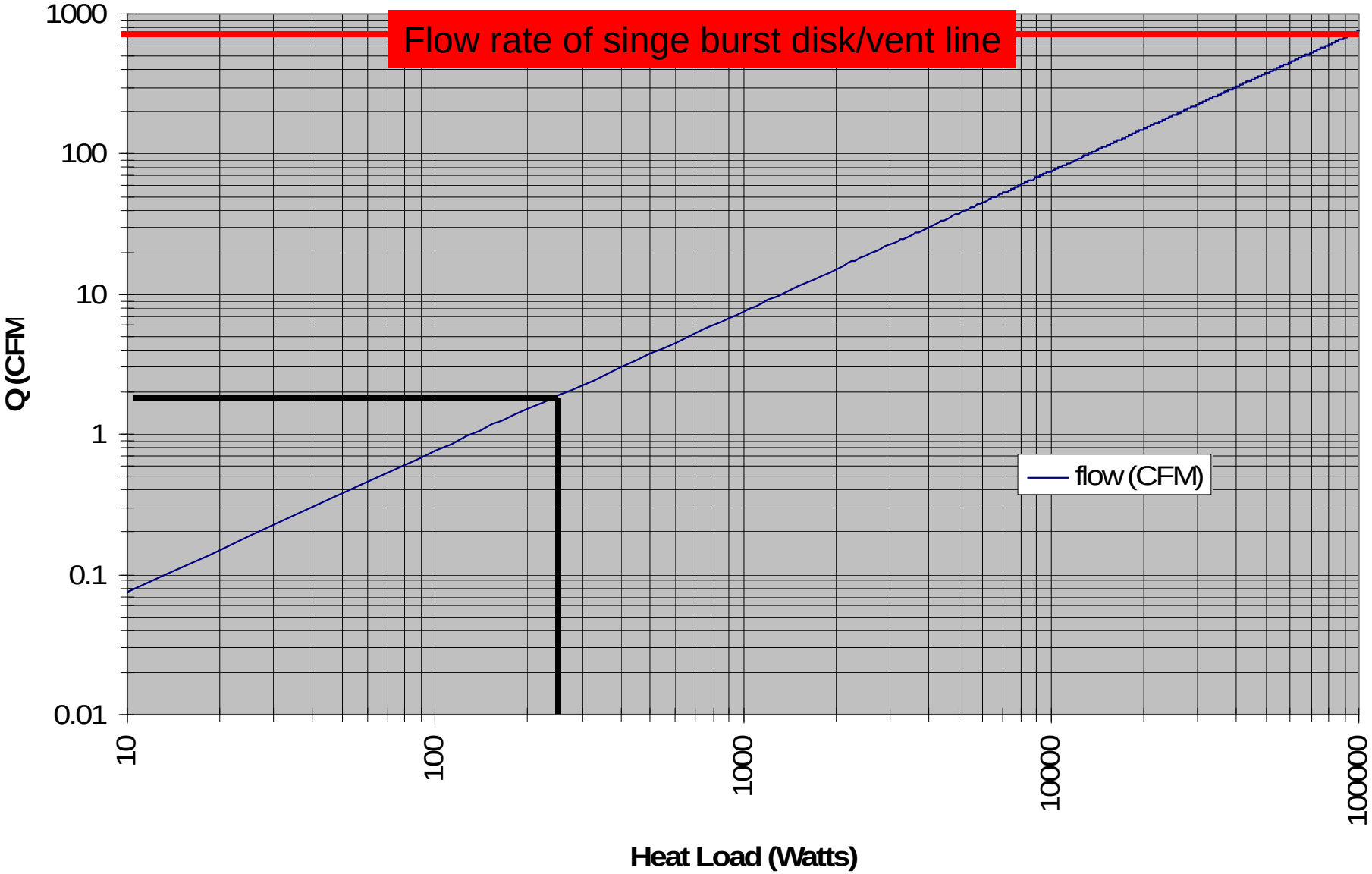

Summary

- Catastrophic beam line venting will result in cryo condensation of air (17.4 liters LN_2).
  - This calculated quantity is conservatively a maximum and based on steady state flux to the cold walls with a constant sticking coefficient of unity and no end effects.
    - Final quantity of condensed solid air will be limited by:
      - Thermal resistance due to significant cryo condensed layers.
      - Convective end cooling of room temperature end components.
- Upon warming from end heating, the reversal of air flow will be sufficiently slow to be handled by the burst disks.
    - 1.7 CFM
  - This flow rate is based on complete heating of nitrogen to 293K prior to exit which leads to a conservatively high value.
  - Calculated relief capacity for a single burst disk for 293K gas
    - 772 CFM @ 25 psia internal
    - Due to the low flow rate and conservative assumptions, a more rigorous analysis is not necessary.

Appendix

CASE I THE CASE OF SMALL AIR LEAKS

CALCULATE THE INDICATED PRESSURE, HEAT LOAD AND TIME TO BLEED 1 STD ATM VOLUME OF GAS AS A FUNCTION OF LEAK RATE

1) $P = \frac{Q}{S_c}$ WHERE Q = LEAK RATE Torr ℓ/sec
S_c = SPEED OF CAVITY ℓ/sec

(WELCH)

ASSUME SPEED OF CAVITY

$$S_c = 11.6A = 11.6\,\frac{\pi(24)^2}{4} = 5300\ \ell/\text{sec}$$

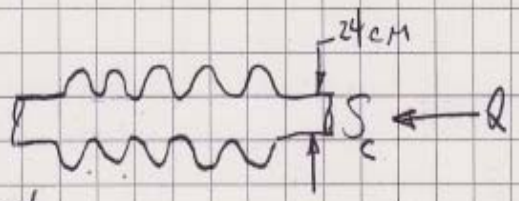

2) HEAT LOAD ON CAVITY

ASSUMING STICKING $\alpha = 1$

$$C_p N_2 = \frac{1040\,J}{kg\,^\circ K} \cdot \frac{28\,g}{Mole} \cdot \frac{kg}{1000\,g} = 29.12\ \text{Joule Mole}^{-1}\,^\circ K^{-1}$$

(WHITE)

$$H = \frac{29.12\,J}{Mole\,^\circ K} \cdot \frac{Mole}{22.4\,\ell} \cdot \frac{293\,^\circ K}{760\,Torr} \cdot Q\,\frac{Torr\,\ell}{Sec}$$

$$H = 0.511\,Q\ \left(\frac{Joule}{Sec}\right)$$

3) TIME TO PUMP ONE SRF VOLUME AT STP.

$$V_{STRING} = 160\,\ell \times 760\,Torr \quad \text{(McINTYRE)}$$

$$= 1.22\times10^5\ Torr\,\ell$$

$$T_{(HRS)} = \frac{1.22\times10^5\ Torr\,\ell}{Q\ Torr\,\ell}\,\frac{Sec}{}\,\frac{HR}{3600\,Sec} = \frac{33.9}{Q}$$

4) EXPRESS 1, 2, 3 GRAPHICALLY

2. CALCULATE QUANTITY OF N_2 CRYO CONDENSED ON COLD CAVITY.

USING N_2 HEAT OF VAPORIZATION OF 557 $\frac{kJ}{Mole}$
(HEAT OF FUSION 0.36)

$$\left(1770+869+554\right)\frac{kJ}{}\,\frac{Mole}{}\,\frac{28\,g}{Mole}\,\frac{}{5.92\,kJ}=\frac{15{,}029\,l}{868\,g}=17.4\,l\ LN_2$$

3. CAPACITY OF SRF ASSUMING SOLID AIR POOLS IN BOTTOM OF CONVOLUTIONS.

-CALCULATED USING SOLID MODEL $2.88\,\frac{l}{\text{CONVOLUTION}}$

$V = 2.88 \times 5 = 14.4$ LITERS

MOST SOLID AIR WILL POOL IN THE CONVOLUTIONS AND BE CONTAINED.

4. CALCULATE RATE AT WHICH SOLID AIR RETURNS TO GAS.

- SRF CAVITY HAS A BACKGROUND HEAT LOAD OF ~50 WATTS
- HEAT LOAD ON SOLID AIR DUE SOLEY TO GAS CONDUCTION

$$\sim H = \frac{kA(T_2-T_1)}{L}$$

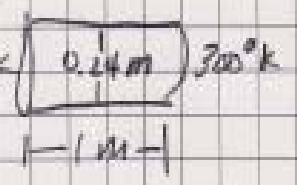

$$=\frac{258\times10^{-8}\,W}{M\,°K}\,\frac{(.0452\,M^2)(210°K)}{1\,M}$$

$= 0.25$ Watts/END

- CALCULATE HEAT LOAD DUE TO FREE CONVECTION

- DUE TO THE CLOSED GEOMETRY, AN ESTIMATE WILL BE MADE USING UNCONFINED CONDITION WHICH WILL YIELD HIGHER THAN EXPECTED HEAT LOAD (CONSERVATIVE)

2. CALCULATE QUANTITY OF N_2 CRYO CONDENSED ON COLD CAVITY.

USING N_2 HEAT OF VAPORIZATION of 5.57 $\frac{kJ}{Mole}$

$$\left(1770+869+554\right)\frac{kJ}{Mole}\,\frac{28g}{Mole}\,\frac{}{5.57kJ} = \frac{16051\,g\,l}{868\,g} = 18.5\,l\ LN_2$$

3. CAPACITY OF SRF ASSUMING SOLID AIR POOLS IN BOTTOM OF CONVOLUTIONS.

-CALCULATED USING SOLID MODEL $2.88\,\frac{l}{\text{CONVOLUTION}}$

$V = 2.88 \times 5 = 14.4$ LITERS

MOST SOLID AIR WILL POOL IN THE CONVOLUTIONS AND BE CONTAINED.

4. CALCULATE RATE AT WHICH SOLID AIR RETURNS TO GAS.

- SRF CAVITY HAS A BACKGROUND HEAT LOAD OF ~50 WATTS
- HEAT LOAD ON SOLID AIR DUE SOLEY TO GAS CONDUCTION

$$\sim H = \frac{kA(T_2-T_1)}{L}$$

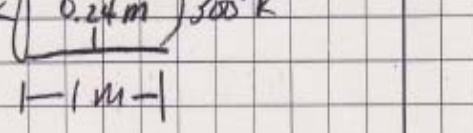

$$= 25.8\times10^{-3}\,\frac{W}{M\,°K}\,\frac{(.0452M^2)(220°K)}{1M}$$

$= 0.25$ Watts/END

- CALCULATE HEAT LOAD DUE TO FREE CONVECTION

- DUE TO THE CLOSED GEOMETRY, AN ESTIMATE WILL BE MADE USING UNCONFINED CONDITION WHICH WILL YIELD HIGHER THAN EXPECTED HEAT LOAD (CONSERVATIVE)

USING THE GENERAL FORM OF THE FREE CONVECTION LORENZ EQUATION UNDER LAMINAR FLOW (McADAMS, HEAT TRANS.)

$$\frac{h_c L}{k_f} = 0.54\left[\frac{L^3 \rho_f^2 g \beta_f \Delta T}{\mu_f^2}\left(\frac{C_p \mu}{k}\right)_f\right]^{0.25}$$

WHERE FOR IDEAL GAS $\beta = \frac{1}{T_f}$ (WHITE)

FOR THE CAVITY L IS THE CHARACTERISTIC DIMENSION AND WILL BE TAKEN AS THE DIAMETER

$11\,FT^2 \; \frac{144\,IN^2}{FT^2} \; \frac{2.54\,CM^2}{IN^2}$

$= 10{,}000\ CM^2$

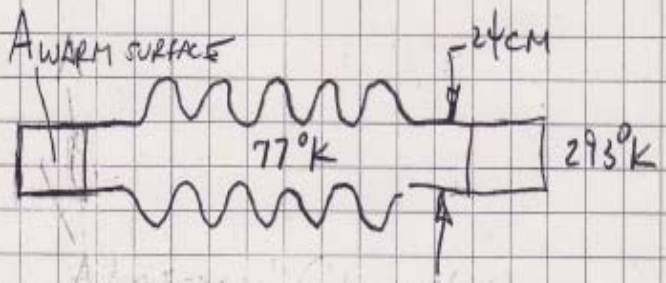

$L = 24\,CM$

$\frac{.5\,kJ}{kg\,°K}\,256\,kg\,(293°K) = 37{,}500\ kJ$

$\rho_f = \frac{28\,g/Mole}{.082\,ATM\,\ell/Mole\,°K \times 77°K} = 4.4\,\frac{g}{\ell} = 4.4\times10^{-3}\,\frac{g}{CM^3}$

$g = 980\ CM/SEC^2$

$\mu_f = 0.012$ CENTIPOISE OR $1.2\times10^{-4}\ g\,CM^{-1}\,SEC^{-1}$ (McADAMS)

$C_p = 1.04\ J/g\,°K$ (WHITE)

$k_f = 0.0091\ Btu/HR\,FT\,°F$ (McADAMS)

$= 1.6\times10^{-4}\ W/CM\,°C$

$T_f = \frac{293+77}{2} = 185\,°K$

$$\frac{h_c L}{k_f} = 0.54\left[\frac{(24)^3(4.4\times10^{-3})^2}{(1.2\times10^{-4})^2}\,\frac{980(293-77)}{185}\left(\frac{1.04\,(1.2\times10^{-4})}{1.6\times10^{-4}}\right)\right]^{0.25}$$

$$h_c = \frac{12.5}{24}\,1.6\times10^{-4} = 8.3\times10^{-5}\ \frac{W}{CM^2\,{}^\circ K}$$

UNITS CHECK

$$\frac{h_c L}{k_f} = \frac{CM^3\,g^2\,CM\,{}^\circ K\,CM^2\,s^2\,J\,g\,CM\,{}^\circ K}{(CM^3)^2\,s^2\,{}^\circ K\,g^2\,g\,{}^\circ K\,CM\,s\,W}$$

$$h_c = \frac{W}{CM\,{}^\circ K\,CM} = \frac{W}{CM^2\,{}^\circ K}\ \checkmark$$

TOTAL HEAT LOSS

$q = hA\,(\Delta T)$ FOR A, USE $10{,}000\ CM^2$

$$q = 8.3\times10^{-5}\ \frac{W}{CM^2\,{}^\circ K}\times 10000\ CM^2\times(293-77) = 180\ \text{WATTS}$$

* DUE TO THE LARGE AMOUNT OF STORED HEAT, ASSUME NO CHANGE IN WARM END TEMPERATURE

5. CALCULATE VOLUMETRIC FLOW RATE USING HEAT OF FUSION OF $0.72\ kJ/Mole$ AND HEAT OF VAPORIZATION OF $5.57\ kJ/Mole$

180 WATTS + 50 WATTS BACKGROUND

$$Q = 230\ \frac{J}{sec}\ \frac{22.4\ STDL}{Mole}\ \frac{Mole}{(5.57+.72)\,kJ}\ \frac{kJ}{1000\,J}\ \frac{1000\,CM^3}{l}\ \frac{M^3}{100^3\,CM^3}$$

$= 8.2\times10^{-4}\ M^3/sec$

$$8.2\times10^{-4}\ \frac{M^3}{sec}\ \frac{60\,sec}{MIN}\ \frac{IN^3}{2.54^3\,CM^3}\ \frac{FT^3}{12^3\,IN^3}\ \frac{100^3\,CM^3}{M^3}$$

$= 1.7\ CFM$

6. CALCULATE MAXIMUM VOLUMETRIC FLOW FOR DISCHARGE VENT PIPE AND BURST DISC.

USE MAXIMUM UPSTREAM PRESSURE OF 25 PSI

FOR COMPRESSIBLE UNCHOKED (i.e SUBSONIC) FLOW (CRANE)

$$q_m' = 678 Y d^2 \sqrt{\frac{\Delta P P_1'}{K T_1 S_g}}$$

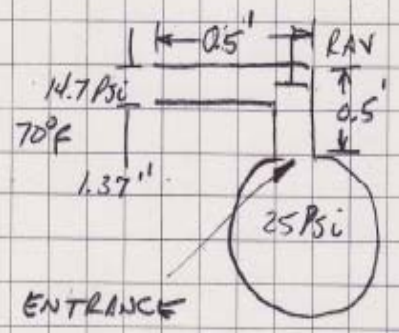

$$k = f\frac{L}{D}$$

$$P_1' = 25 + 14.7 = 39.7 \text{ PSI}$$

$\Delta P = 25$ PSI

$d = 1.37''$, $d^2 = 1.877$

$D = .1142$ FT

$f = 0.022$ (TURBULENT)

$$k = f\frac{L}{D} = \frac{0.022 \times 1}{.1142} = .1926$$

$k = 1$ FOR PIPE EXIT

$k = 55 f_T$ FOR RIGHT ANGLE VALVE $f_T = 0.021$

$k = 1.155$

k TOTAL $= .1926 + 1.155 + 1 = 2.3476$

$$\frac{\Delta P}{P_1'} = \frac{25}{39.7} = 0.6297$$

$Y = 0.64$

$T_1 = 460 + 70 = 470$

$$q_m' = 678(0.64)(1.877)\sqrt{\frac{25 \times 39.7}{2.3476 \times 470 \times 1}}$$

$= 772$ CFM

650 CFM FOR 30 PSI ENTRANCE PRESSURE

REFERENCES

1) K.M. WELCH, CAPTURE PUMPING TECHNOLOGY, 1991

2) F.M. WHITE, HEAT TRANSFER, 1984

3) McINTYRE (BNL), CALCULATION FOR STRING VOLUME COMPONENT WEIGHTS AND SURFACE AREA

4) McADAMS, HEAT TRANSMISSION, CHEMICAL ENGINEERING SERIES, 1954

5) CRANE, FLOW OF FLUIDS THROUGH VALVES, FITTINGS AND PIPE, TECH PAPER 410, 1988

JS-0-0052-000

"Proprietary Data is included in the information disclosed herein and is the sole property of BS&B SAFETY SYSTEMS, L.L.C. This information is submitted in confidence and neither this document nor the information disclosed herein shall be reproduced or transferred to other documents or used or disclosed to others for manufacturing or for any other purpose except as specifically authorized in writing by BS&B SAFETY SYSTEMS, L.L.C.

ITEM	D/S	PART NO.	QTY.	DESCRIPTION
1	B	JS-2-0038-088	1	INLET (304 SS)
2	B	JS-4-0039-088	1	OUTLET (304 SS)
3	—	KO-0-1139-088	1	CF FLANGE HALF NIPPLE 2 3/4" O.D.
				NOR-CAL MODEL #IN-150
4	—	———	—	RUPTURE DISK, 1.5" LPS (316 SS)
				B.P.: 6 PSI @ 72° F
				MFG. RANGE: 5 TO 7 PSI @ 72° F

"ORIGINAL"

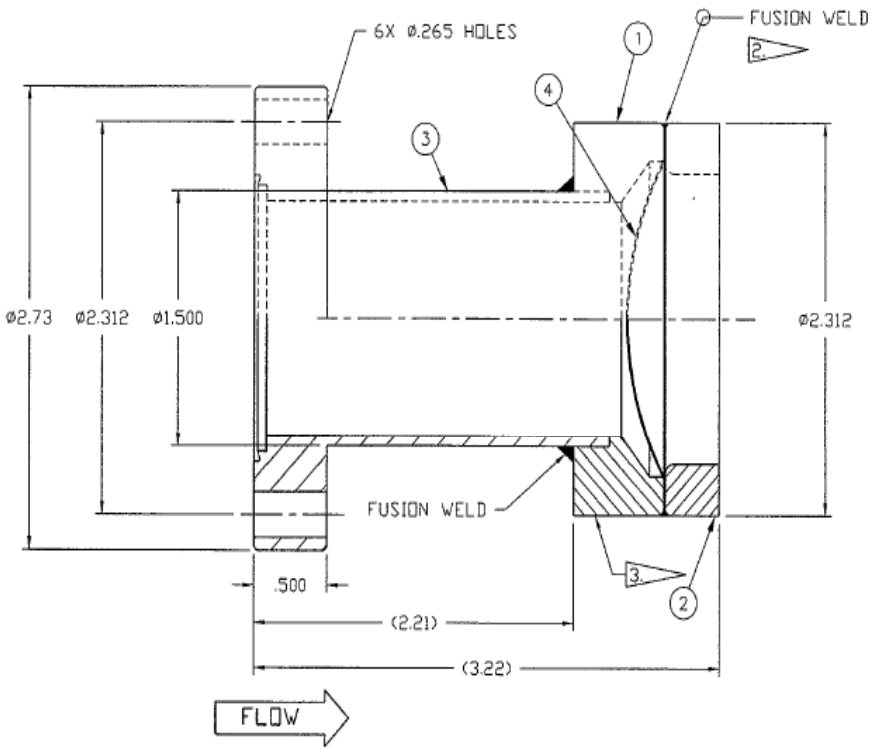

NOTES:

1.____ AT LEAST 6% OF THE LOT SHALL BE BURST TESTED (TWO BURST TESTS MINIMUM). THIS NUMBER MAY INCLUDE FINDING BREAKS AS WELL AS FINAL BURST TEST SAMPLES.

2. FUSION WELD IAW MIL-2-8611A.

3. ELECTRO-ETCH THE FOLLOWING:
FLOW →
X.X PSI @ 72° F
LOT # "XXXXXXXX-X"
"BS&B" & PART # "XX-X-XXXX-XXX"

4.____ HELIUM LEAK TEST PER Q.C. 527.

5.____ PARTS SHALL BE SENT TO NTS, QUALITY CONTROL CLEANING OR EQUIVALENT FOR CLEANING. IN AN AREA EQUAL TO A CLASS 100 CLEANROOM THE ASSEMBLY SHALL BE CLEANED TO REMOVE ALL SOLVENTS, PARTICULATE MATTER AND FINGERPRINTS. BECAUSE THE RUPTURE DISK IS FRAGILE ULTRASONIC CLEANING SHALL NOT BE USED. THE RUPTURE DISK SHALL NOT BE SUBJECTED TO FORCED OR COMPRESSED AIR AS PRESSURIZED AIR COULD DAMAGE THE DISK.

6.____ AFTER CLEANING THE ASSEMBLY MUST PASS A FINAL HELIUM LEAK TEST OF 1×10^{-7} CC/SEC. NO VACUUM GREASE OR SEALANT SHALL BE USED. AFTER THE PART IS CLEAN AND DRY A PARTICLE COUNT SHALL BE MADE TO DETERMINE THE NUMBER OF PARTICLES PER CUBIC FOOT LARGER THAN 0.5 MICRONS REMAINING. WITH THE PART SUSPENDED WITH THE FLANGE DOWN, THE COUNT SHALL BE TAKEN AT THE FLANGE OPENING AFTER THE ASSEMBLY IS TAPPED WITH A PLASTIC HAMMER TO DISLODGE PARTICULATE. THE RESULTING COUNT SHALL BE RECORDED AND INCLUDED ON THE TAG WITH EACH PART.

125 FINISH OR BETTER ALL OVER UNLESS NOTED OTHERWISE
BREAK ALL SHARP CORNERS UNLESS NOTED

7.____ AFTER THE FINAL LEAK TEST THE FLANGE END SHALL BE COVERED WITH A CLEAN PLASTIC COVER. THE ASSEMBLY SHALL BE SEALED IN A CLEAN POLYETHYLENE BAG PURGED WITH DRY FILTERED NITROGEN. THAT BAG SHALL THEN BE SEALED IN ANOTHER CLEAN POLYETHYLENE BAG.

8.____ A LABEL CONTAINING THE FOLLOWING INFORMATION SHALL BE SEALED IN BETWEEN THE TWO BAGS:

JS-0-0052-000
MONTH/YEAR
BS&B LOT NUMBER
PARTICLE COUNT

REV.	ECN NO.	BY	CHK'D.	DATE

TITLE: ASSY., 1-1/2" LPS WELDED UNIT — B

TOLERANCE: DECIMALS
.XXX: ±.010
.XX: ±.03
ANGLES: ±0°30'

SCALE: 4/3

RELEASE No.: A7-2539

BS&B SAFETY SYSTEMS

DRAWN BY: CAD 10/01/07
CHECKED BY: P Patrick 10/01/07
APPROVED BY: 10/16/07

JS-0-0052-000

Lessard, Edward T

From: Nelson, DeVaughn [DeVaughn.Nelson@science.doe.gov]
Sent: Wednesday, March 26, 2008 5:40 PM
To: fck@ornl.gov; Lessard, Edward T; Dennis.Parzyck@ch.doe.gov
Subject: FW: Vacuum System Design Standard - Draft 1
Importance: High
Attachments: vacuum standard-draft 1.doc

Colleagues:

I know that each of you is aware of Bob Casey's consensus standard development to address vacuum systems per Part 851 requirement. I could not verify that I had passed this on to any of you, so here you will find the draft standard attached.

As best I can tell, the team members for this standard involves only contractors, which is good. I thought we might also quickly consider/discuss on Friday the incorporation of such a standard in the ASO Guide (DOE G 420.2-1) as an attachment. I have not given this any thought, but I know of no reason why this could not be done as Bob suggests. Do any of you have any concerns? This topic, obviously, could be of significant interest at the TJ Workshop. By putting it in the Guide, this sets the precedent mark in the sand where the accelerator community finds implementation of the 851 requirements to be best accomplished at accelerator facilities. Then others can do what they want at other facilities without suggesting or pushing their approaches onto the ASO community.

Thanks

DeVaughn

From: Casey, William (Bob) [mailto:casey@bnl.gov]
Sent: Tuesday, March 18, 2008 11:05 AM
To: Nelson, DeVaughn
Subject: FW: Vacuum System Design Standard - Draft 1

Hi DeVaughn – we continue to make progress with the development of a consensus standard addressing vacuum systems and Part 851 requirements. I just wanted for you to see where we are at this point. As we discussed last fall, our plan is to complete this standard and then ask that it be included as an attachment in the Accelerator safety order guidance document.

Let me know if you have comments.

Best wishes - Bob

From: Casey, William (Bob)
Sent: Tuesday, March 18, 2008 10:47 AM
To: Sharma, Sushil; Lessard, Edward T; Hseuh, Hsiao-chaun; Kane, Steven F; 'kausch@jlab.org'; 'dolis@fnal.gov'; 'Keith.Jobe@SLAC.Stanford.EDU'; 'laddp@ornl.gov'; Haas, Edwin; 'Dave Pushka'; 'Toter, William F.'; 'Jeff Collins'; 'jerickson@lanl.gov'
Subject: Vacuum System Design Standard - Draft 1

The attached file contains the first draft of our consensus standard for design of vacuum systems. It is based on our discussions during the 4 conference calls previously held. As I put together the draft, I filled in potential gaps using material from the Fermi Lab Vacuum Vessel Standard which I judged consistent with our discussions.

Please take a look and let me know what you think.

I plan a conference call for this Friday at 2:00 pm EDT to discuss this draft.

Bob

A Consensus Standard For The Design, Construction, Operation, Inspection, And Maintenance Of Vacuum Vessels And Associated Components at Accelerators

I. INTRODUCTION

Vacuum vessels, including evacuated chambers and insulating jacketed Dewars**,** pose a potential hazard to equipment and personnel from rupture due to back-fill pressurization or implosion due to vacuum window failure. It is therefore important to design and operate vacuum systems in accordance with applicable and sound engineering principles. In addition, 10 CFR 851 defines vacuum vessels as a pressure vessel because of the potential for catastrophic failure resulting from back-fill pressurization. As such, vacuum vessels subject to back-fill pressurization are potentially subject to the requirements of the ASME Pressure Vessel Code Section VIII (hereafter referred to as the Code).

However, the Code excludes vessels with internal or external operating pressure not exceeding 15 psi. Therefore the requirements of the Code do not apply to vacuum systems provided that adequate pressure relief assures that the maximum internal pressure within the vacuum vessel is limited to less than 15 psig from all credible pressure sources, including failure scenarios.

Vacuum vessels which cannot be protected against from pressurization exceeding 15 psi, are subject to the requirements of the Code. In some situations when vacuum vessels are used in special research applications, the Code may not be applicable because of pressure range, vessel geometry, use of special materials, etc. In these situations, Part 851, Appendix A, Part 4, Section C applies which notes that the contractor must implement measures to provide equivalent protection and ensure a level of safety greater than or equal to the level of protection afforded by the ASME or applicable state of local code. Section C specifically states that the program must include the following:

> (1) Design drawings, sketches, and calculations must be reviewed and approved by a qualified independent design professional (i.e. , professional engineer). Documented organizational peer review is acceptable.
>
> (2) Qualified personnel must be used to perform examinations and inspections of materials, in-process fabrications, non-destructive tests, and acceptance test.
>
> (3) Documentation, traceability, and accountability must be maintained for each unique pressure vessel or system, including descriptions of design, pressure conditions, testing, inspection, operation, repair, and maintenance.

The purpose of this standard is to further define these requirements for vacuum vessels in general, and in particular when the Code does not apply and an equivalent level of safety as required by Part 851 must be provided.

II. SCOPE

This standard establishes requirements and guidelines for the design and construction of vacuum vessels designed and built after the publication of 10CFR851. It also includes

requirements for operation, inspection, and maintenance of vacuum piping, vessels and systems.

Applicability of Requirements for Mitigation of Potential Implosion Hazards

The requirements of this standard apply to all vacuum vessels except those with a total energy less than 100,000 joules. This includes:

1. Any vessel with a volumetric capacity of less than 35 cubic feet.

2. Any vessel under external pressure whose product P x V is less than 515 (psi) (cu. ft.), where P is the external differential MAWP and V is the volumetric capacity.

Vacuum vessels with thin or brittle vacuum windows require special considerations not addressed in this standard; however, windows are likely to be the weakest portion of the vacuum vessel when considering the implosion hazard

Applicability of Requirements for Mitigation of Potential for Back-fill Pressurization Hazards

All vacuum vessels that cannot be protected against internal over-pressurization > 15 psi.

III. DEFINITIONS[1]

Engineering Evaluation – A document prepared by the responsible engineer which demonstrates that a given system satisfies the requirements of this standard. It provides a basis for independent review of design and installation, as well as a record for a future user of the system design parameters. The engineering evaluation is expected to address the topics listed in Appendix B.

Independent Design Professional – A person responsible for independent review of the design of a vacuum system subject to the requirements of this standard. This person is normally appointed by the Division Manager for the organization responsible for operation of the vacuum system and must meet the qualification requirements define in Section V.

Pressure Safety Committee (PSC) - A Committee appointed by the Laboratory Director or other senior Lab manager for review of new or modified designs of vacuum/pressure systems subject to this Standard. The Committee also serves as the authority having jurisdiction for matters of pressure safety for the facility. Reviews by the PSC are comprehensive and are expected to span the topics identified in appendix A.

Responsible Vacuum System Design Engineer – the person responsible for the engineering design of a vacuum system. This person is normally appointed by the Division Manager for the organization responsible for operation of the vacuum system and must meet the qualification requirements define in Section V.

[1] All titles used in this standard should be considered generic and not mandated. It is understood that different organizations will have different nomenclature for similar functions

Vacuum System - any system containing a vessel and its associated piping and components having atmospheric pressure outside the system and a pressure less than atmospheric inside the system, or any system which is operated with a differential pressure greater on the outside than on the inside.

Requirements for vacuum vessels are determined by the following categories:

Category I – Vacuum vessels in which the differential operating pressure can never exceed 15 psi.

Category II- Vacuum vessels which can be protected from pressurization exceeding 15 psi through engineering controls (e.g. pressure relief devices).

Category III – Vacuum vessels which are not or can not be protected against from pressurization exceeding 15 psi.

IV. Responsibilities

A. The Division Manager for the organization designing or operating a vacuum vessel is responsible for the implementation of the requirements of this standard. He/she shall assign a qualified responsible engineer to design the vacuum system and prepare the engineering note. The Division Manager and Responsible Engineer shall arrange for review by an independent design professional or the Pressure Safety Committee and shall maintain an open, updated file for each vacuum vessel located in his area of operation.

B. The Pressure Safety Committee is responsible for independent review of vacuum system design and shall serve as the authority having jurisdiction for matters of vacuum/pressure safety for the facility. A quorum of at least 5 members should be present for all formal actions of the committee.

V. Qualifications

a. Responsible Vacuum System Design Engineer

The responsible vacuum system design engineer shall possess a recognized degree or certificate of professional standing and applicable and demonstrated experience, or is person who, by extensive knowledge, training and experience, has successfully demonstrated the ability to solve or resolve problems relating to the subject matter. The qualifications and experience required of the responsible design engineer will depend on the complexity and criticality of the system and the nature of the individual's experience. Approval from the Laboratory Authority Having Jurisdiction is required if the individual does not meet at least one of the following criteria:

(a) Completion of an engineering degree, requiring four or more years of full-time study, plus a minimum of 5 years experience in the design of related vacuum/pressure systems.

(b) Professional Engineering registration, recognized by the local jurisdiction, and experience in the design of related vacuum/pressure systems.

(c) Completion of an engineering associates degree, requiring at least 2 years of full-time study, plus a minimum of 10 years experience in the design of related vacuum/pressure systems.

(d) Fifteen years experience in the design of related vacuum/pressure systems.. Experience in the design of related vacuum/pressure systems is satisfied by vacuum/pressure systems design experience that includes design calculations for pressure, sustained and occasional loads, and piping flexibility.

These qualification requirements also to any individual serving in the role of an independent design reviewer

B. Pressure Safety Committee (PSC)

The members of the PSC are appointed by the Laboratory Director and shall be experienced and knowledgeable in the design and operation of vacuum/pressure systems. Technical competence for each member shall be evidenced by 15 years of employment as a safety professional, physicist or mechanical engineer. A Bachelor of Science degree or greater is required. Completion of training in pressure-safety-codes identified in Appendix A 10CFR851 is also required. The committee as a whole must possess the capability to evaluate the list of topics identified in appendix A. Individual members are not expected to be expert in all topic areas. At least one member of the PSC shall possess the qualifications identified for a Vacuum/Pressure Vessel Designer.

VI. Requirements

A. Design

Vacuum vessels shall be designed to ensure that allowable stresses are not exceeded and to ensure that the vessel is stable (resistant to buckling).

a. Category I and II Vacuum Systems

Vacuum vessels in these categories are not required to be U-stamped. For vacuum systems in the categories I and II, the allowable compressive stresses shall be calculated using ASME Pressure Vessel Code Case 2286, July 17, 1998. Alternatively vacuum vessels may be designed in accordance with the following applicable section of the ASME Code.

- Section VIII Div. 1 Parts UG28, UG29, UG 30, UG32, UG33, UG34, UG37 to UG42, UG80.
- Section VIII Div. 1 Appendix 9
- Section VIII Div. 1 Appendix 13 paragraph 13-14
- Section VIII Div. 2 Appendix 1
- Section VIII Div. 2 Appendix 2

- Section VIII Div. 2 Appendix G paragraph G112

- ASME Code allowable stresses shall be used. For materials not included in tables of Section II, allowable stresses shall be calculated as described in the ASME Code Sec. VIII Div. 1 Appendices P & Q and Div. 2 Appendix J.

- Stresses and vessel stability shall be calculated as described in the Code. Finite Element Analysis (FEA) may be used to refine stress calculations or model vessel geometries not described in the Code.

- Stresses shall meet allowable stress criteria described in the Code.

- The external pressure for buckling failure predicted by Finite Element Analysis (FEA), used for shapes not specifically covered in the Code, shall not be less than 3.5 times the MAWP.

b. Category III Vacuum Systems

For vacuum systems in Category III, all design requirements contained in the ASME Pressure Vessel Code apply. Vessels must be U stamped unless authorized by the authority having jurisdiction. The provisions of the standard below for Category 3 systems define the equivalence requirements which must be met when the Code is deemed not applicable.

B. Design Review

The engineering evaluation prepared for category III vacuum systems must be reviewed and approved by a qualified independent design professional (see definitions above) or through review by the Authority having Jurisdiction.

C. Fabrication

Vacuum systems in category III must be fabricated, inspected, and tested in accordance with written procedures and a formal quality assurance program satisfying DOE 414.C requirements.

a. **Welding**

Because of the risk of internal over-pressurization, personnel performing welding and brazing activities in category III vacuum systems shall meet the qualification requirements identified in the American Welding Society (AWA) 2.1.

1. For all welding to pressure retaining components and attachments to pressure retaining components all welding and brazing procedure specifications (WPS/BPS) and welder and brazer performance qualifications shall meet the requirements of ASME Boiler & Pressure Vessel Code Section IX and/or AWS B2.1
2. All welding and brazing of Class III systems must also meet the applicable design and fabrication code(s) that are employed in the design of the system.

3. Welding or brazing of specially designed seals, structural or electrical joints where pressure containment is provided by components that are not integral to the welding or brazing process may be qualified by the welding/brazing of sample joints on like materials with precise joint configurations and cross sectional areas that duplicate the designed component. These sample welds must be visually inspected and a minimum of 4 cross sections cut and examined by appropriate polishing and etching methods that reveal adequate fusion and penetration, and must contain no injurious defects. Welding or brazing of the final components must be done to a welding/brazing procedure specification that has duplicated essential and non essential variables identified in ASME IX for process(es) tested. These procedures must contain acceptability standards for the weld/braze joints. Similarly the performance qualifications of welders/brazers for these joints are qualified by producing and passing the actual sectioning test joints within the limitation of the essential and non-essential variables identified in the WPS/BPS. Maintenance of qualification and retests for failures must follow the requirements of ASME IX.

Records demonstrating conformance with these qualifications must be submitted and approved by the responsible engineer. Records of these qualifications must be maintained with the records for the vacuum system

b. **Inspection**

All vessels shall be visually inspected during fabrication, testing and operation by the responsible design engineer to determine that the vessel has been constructed in accordance with design requirements and good engineering practice.

- Upon receipt of materials used for construction of the vessel
- All welds
- Prior to and following all tests
- Prior to initial operation
- Every 5 years for operating vessels and systems

Because of the additional risk of internal over-pressurization, personnel inspecting category III vacuum vessels and systems should meet qualification requirements defined by the American Society for Non Destructive Testing (ASNT) Specification SNT-TC-1A 1996.

Records demonstrating conformance with these qualifications must be submitted and approved by the responsible engineer. Records of these qualifications must be maintained with the records for the system.

c. **Testing**

All vacuum vessels shall be tested by pumping out the vacuum volume and determined to be leak-tight. Following the test the responsible engineer shall examine the vessel and determine that no effect in excess of limits established by the engineer was experienced.

For ordinary vacuum vessels the test pressure shall be full atmospheric pressure differential of 15 psid. For vacuum vessels not intended to be pumped out to the full

atmospheric pressure differential of 15 psid, the test pressure shall be 125% of the maximum allowable external differential pressure, but not more than full atmospheric pressure (15 psid).

For a vacuum vessel within a pressure vessel, the test differential pressure shall be 125% of the maximum allowed working pressure differential.
Thin windows and other delicate equipment may be removed for the test of the vacuum vessel.

All vacuum tests shall be documented with a brief description and the signatures of the responsible engineer and one additional witness. Records of these tests must be maintained.

D. Pressure Relief

Pressure relief devices used in Category II or III vacuum systems must be high quality and shall be certified by the National Board of Boiler and Pressure Vessel Inspectors. Calculations shall be performed and documented to demonstrate adequate sizing for venting capability of the pressure relief device(s).

In special applications where Board certified relief devices are not be available for category II systems, operability tests demonstrating function and flow capacity of the relief device must be performed and documented. A vacuum system utilizing a non-certified pressure relief device that has not been tested must be treated as a category III system.

Spring actuated pressure relief devices shall be inspected and tested prior to installation and then every five years while in routine operation. Burst disks shall be visually inspected at a regular period not to exceed 5 years. Engineered or administrative controls are required to assure that the pressure relief devices are not altered or removed during the operating lifetime of the vessel. Safety wires/labeling are examples of this type of control

E. Existing Vacuum Systems

It is not the intent of this standard to apply these requirements retroactively to existing vacuum systems. The operating department responsible for the current operation of a vacuum system constructed prior to Feb. 9, 2007 should ensure that operation of the vacuum system is safe and that the vacuum system was designed and operated in a manner consistent with applicable and sound engineering practices. Questionable vessels or those with unknown histories shall be re-tested as defined in this standard. Operability of relief devices on pre-existing systems should be confirmed if such evidence does not exist. Bench top tests of similar relief devices are acceptable if the relief device can not be tested as installed. The division manager or his designee shall provide a written record of the decisions, judgments, tests, administrative controls and hazard analysis that were necessary to approve these types of vessels under this standard.

F. Records

All design drawings, sketches, calculations, reviews, tests, inspections, material certifications, qualification records, and operating history required by this standard must be documented and retained through-out operation of the system and for a five year period following disposal of the vessel and related system. For purpose of this requirement, inactive systems in storage are treated the same as an active system until such time as it is officially “disposed”.

Appendix A

Review by Pressure Safety Committee

All vacuum vessels designed to this standard require independent review by Laboratory Pressure Safety Committee. The basis for this review is the engineering note which should address the following topics as applicable:

- Physical layout
- Piping and instrumentation drawings
- Design parameters including:
  - Maximum design/Allowable working pressures
  - Pressure vessel, piping and component ratings
- Stress calculations
- Fabrication procedure and inspections
- Failure scenarios which can over-pressure the vacuum volume
- Maximum release rate and pressure relief capabilities
- Quench protection description, if appropriate
- Stress analyses for custom made equipment
- Materials used and their suitability for application
- Evaluation of oxygen deficiency hazard
- Test plans and results, if any
- Operating and emergency procedures
- Results of department safety review(s)

Appendix B

Engineering Evaluations

Engineering evaluations are required for all vacuum systems subject to this Standard. Preparation of the evaluation is the responsibility of the vacuum design engineer. The engineering evaluation shall include the following:

- Design drawings, sketches, and calculations, including a stress/collapse analysis of all exceptional parts of the vessel.
- a fabrication procedure, including a list of planned and completed inspections and any other quality control procedures taken.
- acceptance tests planned or completed
- description of and capacity requirements for pressure relief systems and associated tests
- a description of personnel hazards associated with vessel operation and the methods used for protection. The hazard analysis shall address vessel application, operating limits and controls, possible effects in the event of vessel failure and inherent safeguards provided.

ERL: High Beta 5 Cell Cavity Cryogenic & Pressure Safety Committee Review

May , 2008

SIXTY YEARS
OF DISCOVERY
1947-2007

BROOKHAVEN
NATIONAL LABORATORY

Office of Science
U.S. DEPARTMENT OF ENERGY

Cold Emission Test System PFD/ P&ID

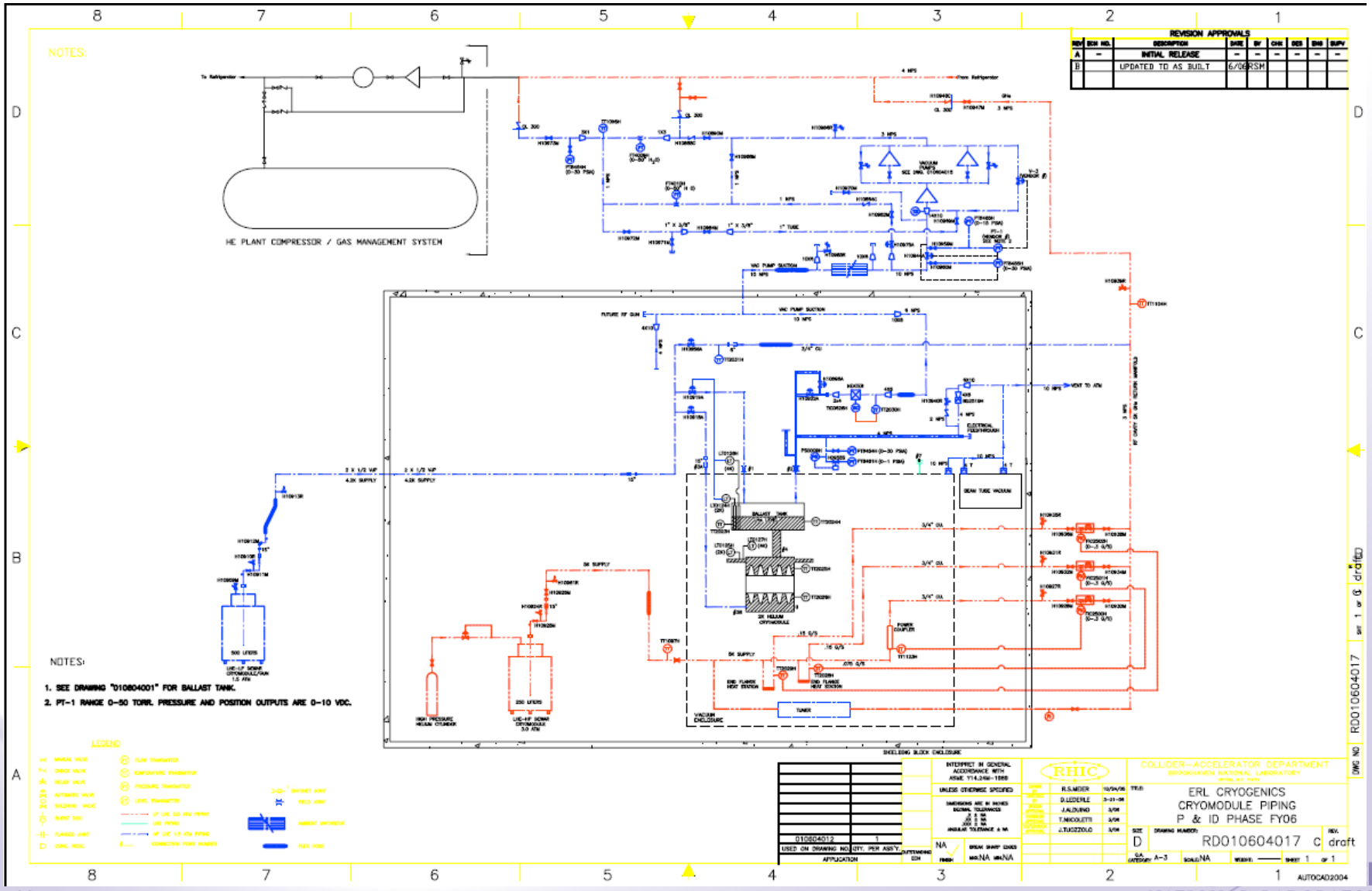

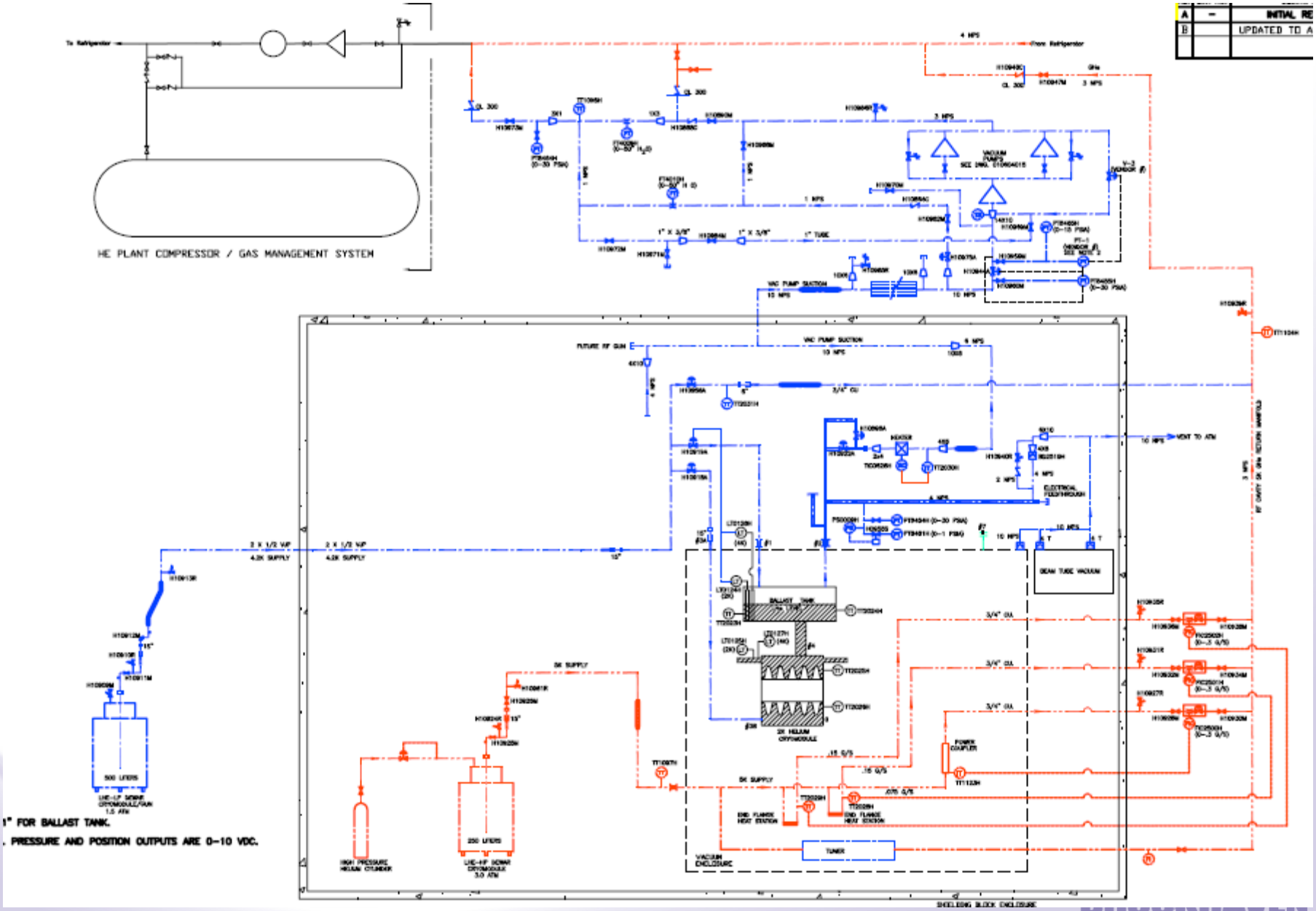
HE PLANT COMPRESSOR / GAS MANAGEMENT SYSTEM
INITIAL RE
UPDATED TO A
VACUUM PUMPS
VAC PUMP SUCTION
FUTURE RF GUN
VENT TO ATM
ELECTRICAL FEEDTHROUGH
BEAM TUBE VACUUM
BALLAST TANK
2K HELIUM CRYOMODULE
POWER COUPLER
END FLANGE HEAT STATION
TUNER
VACUUM ENCLOSURE
HIGH PRESSURE HELIUM CYLINDER
500 LITERS
250 LITERS
SHIELDING BLOCK ENCLOSURE
" FOR BALLAST TANK.
. PRESSURE AND POSITION OUTPUTS ARE 0-10 VDC.

eCX Cavity String Cryo-Module P& ID

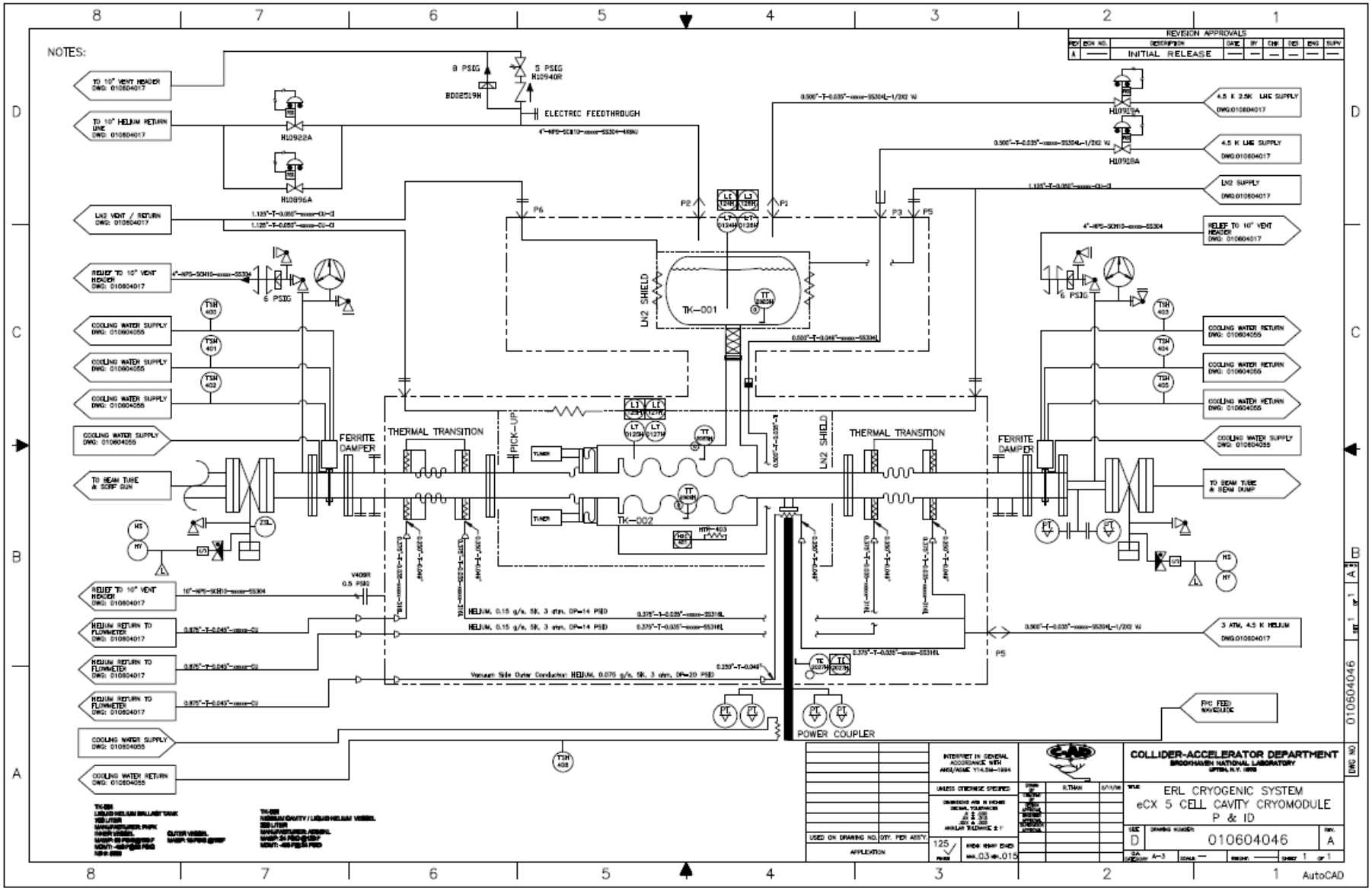

UHV Side Relief Gun Side

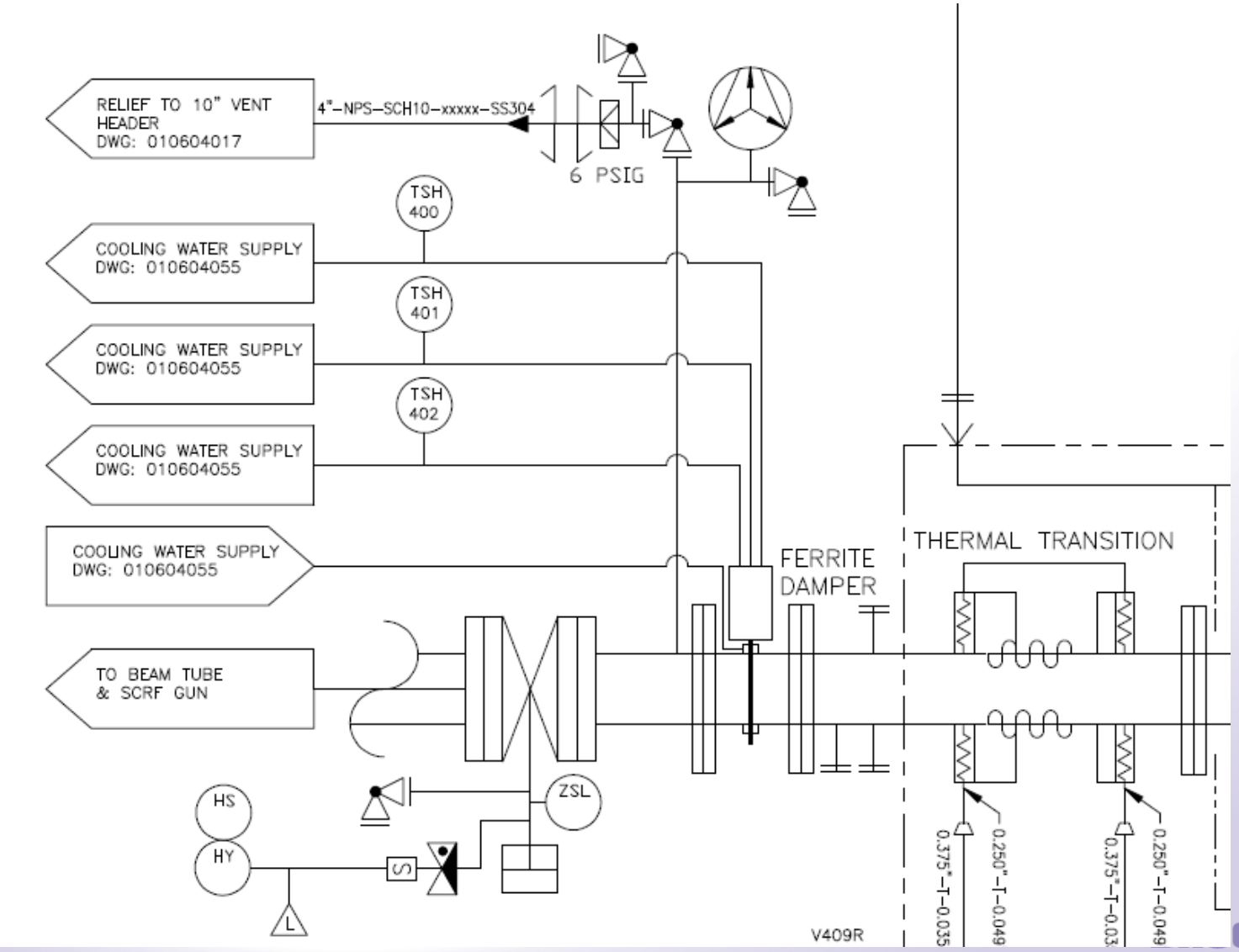

UHV Side Relief Beam Dump Side

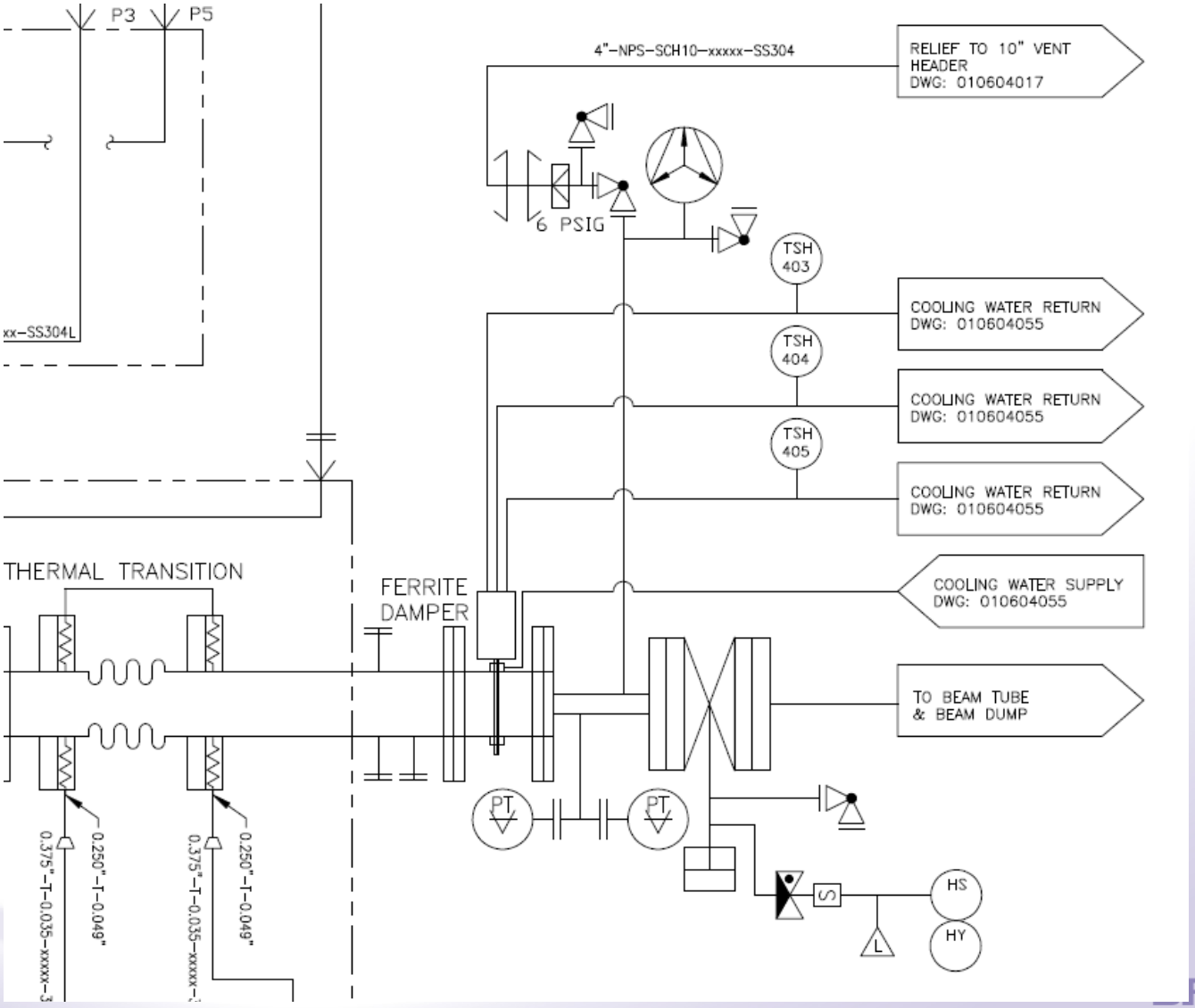

Cryomodule

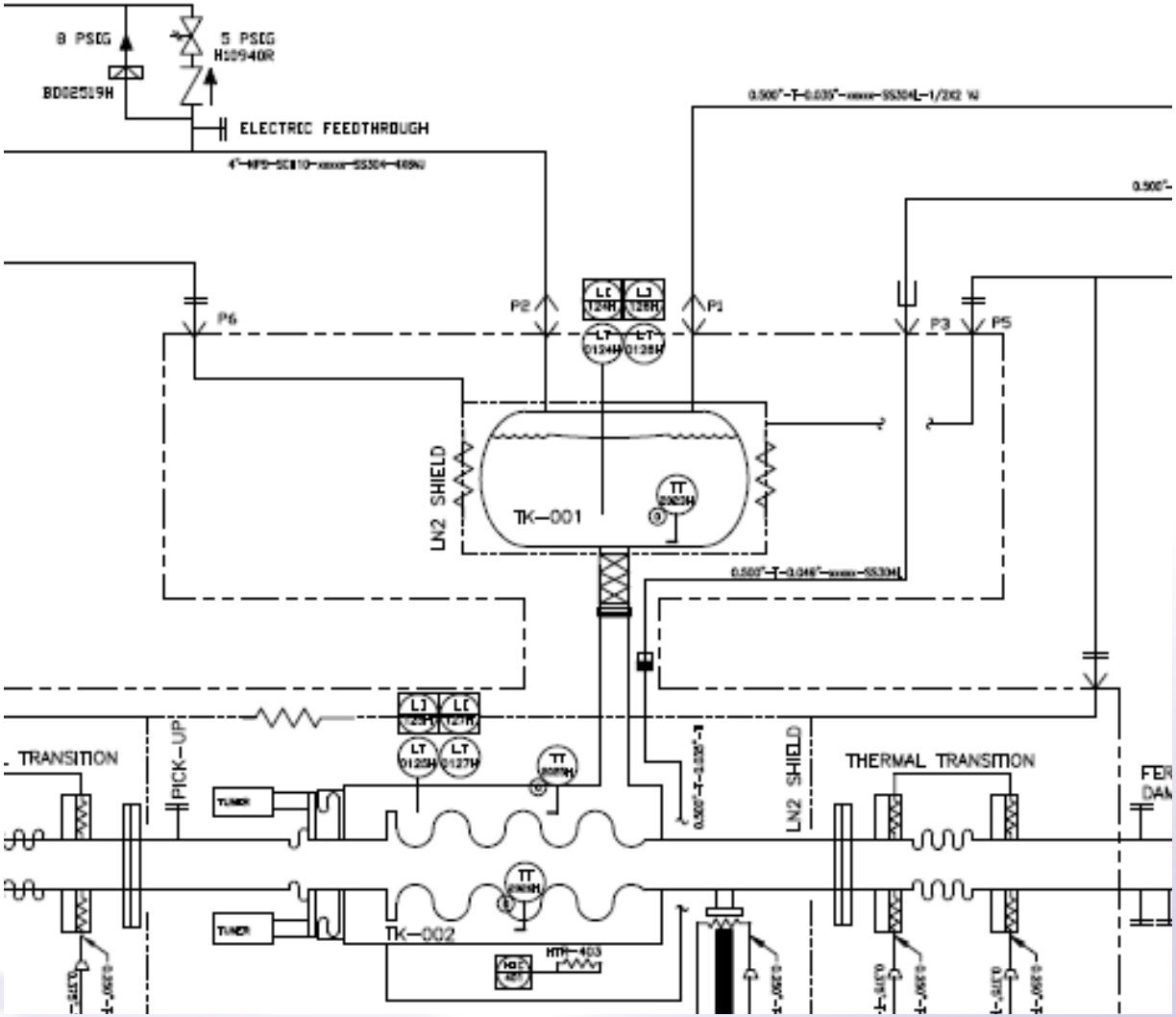
8 PSIG
5 PSIG
H10940R
BD02519H
ELECTRIC FEEDTHROUGH
P6
P2
P1
P3
P5
LN2 SHIELD
TK-001
TT
TRANSITION
PICK-UP
TUNER
LT
LT
LN2 SHIELD
THERMAL TRANSITION
TK-002
HTR-403

Reliefs

- Air leak into beam-tube vacuum:

A. Small leak of air into beam tube: Relief on beam-tube side

- Air accumulates; freezes/liquefies
- Released during warm-up of cavity

B. Large leak of air: Relief on helium side

- Air condensing on beam tube side of cavity
- Boil-off of helium in cavity

- Helium Leak from Cavity breach

C. Vaporization of helium: Relief on beam-tube side

- Liquid helium eventually wets area to gate valves
- Heat transfer from walls to helium
- Condensing of Air on surface outside of insulating vacuum

Cryomodule Cross-section

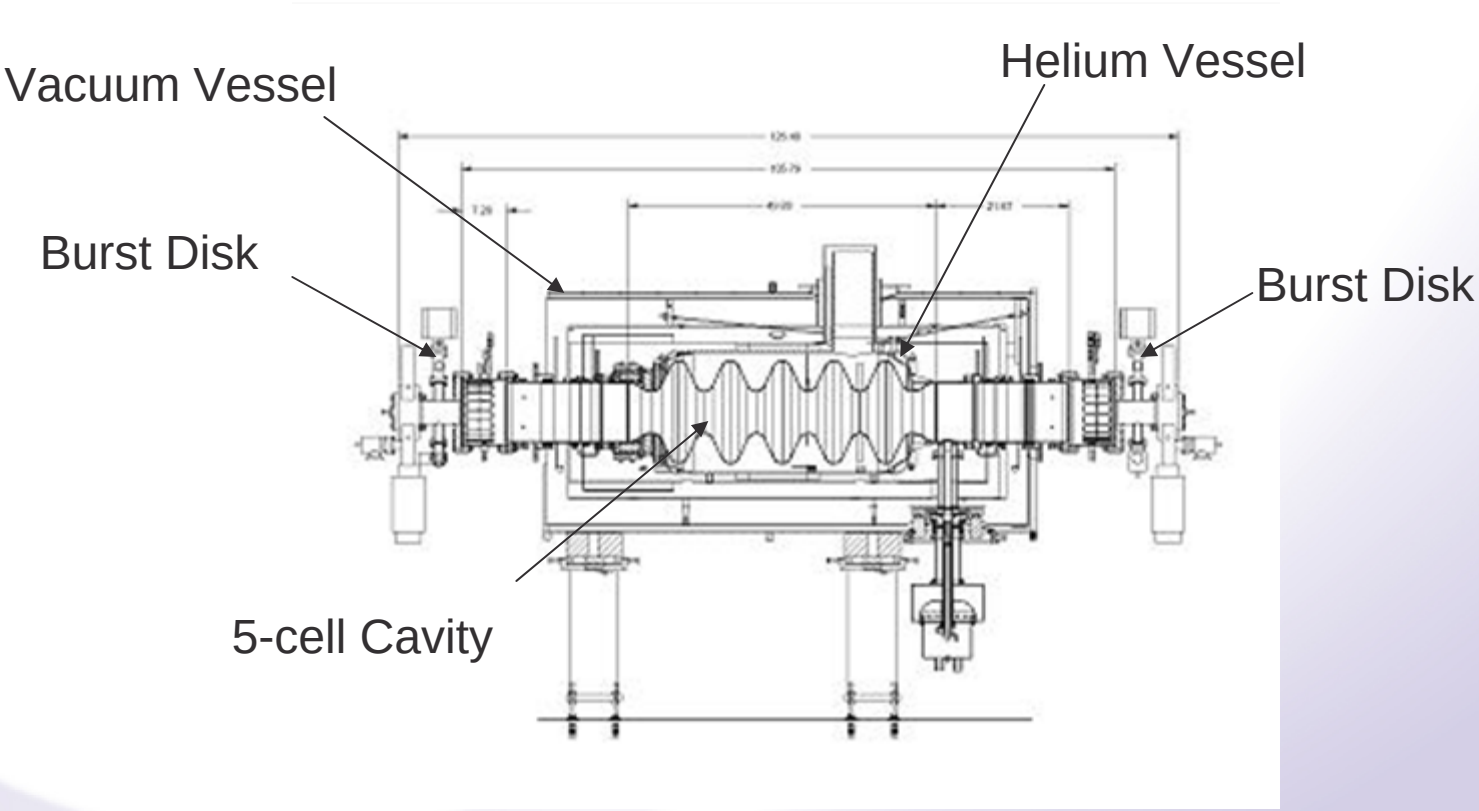

UHV (Beam-Tube) Side Relief

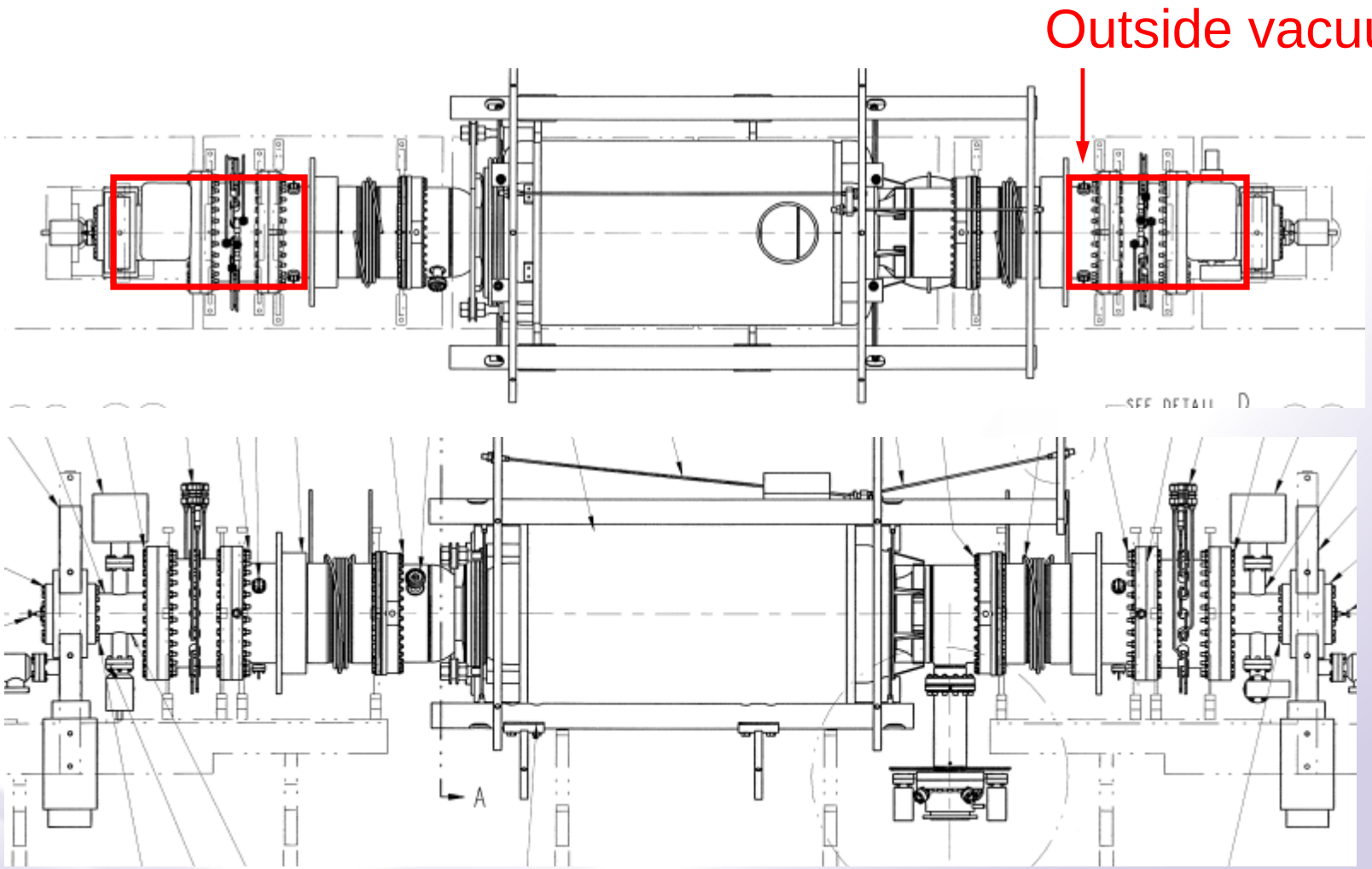

A & C. Small UHV Air Leak, Helium Leak into UHV Side Relief on UHV Side

- **A. Accumulated air case: Q < 1 kW** **(Rob Todd's Analysis)**
  - Relief Rate < 0.02 kg/s Air
  - Relief Area Required< 0.55 in^2

- **C. Helium leak from Cavity breach**
  - **Heat Input:** From condensing air on surface outside insulating vacuum volume 38 kW/m^2 flux
  - **Surface Area, outside insulating vacuum: 0.67 m^2**
    - Q input ≈ 25 kW
    - Saturated vapor
    - Relief Rate: 1.5 kg/s Helium

  - **Relief Area required: 2.24 in^2** (Coefficient of Discharge method)
  - Tube Cross sectional Area: 2 x=1.47 in^2 =2.94 in^2
  - Burst Disk Area: 2 x 2.32 = 4.64 in^2

UHV (Beam-Tube) Side Burst Disk

Dia: 1.37 in
Tube Area:1.47 in^2

QTY: 2
Total: 2.94 in^2

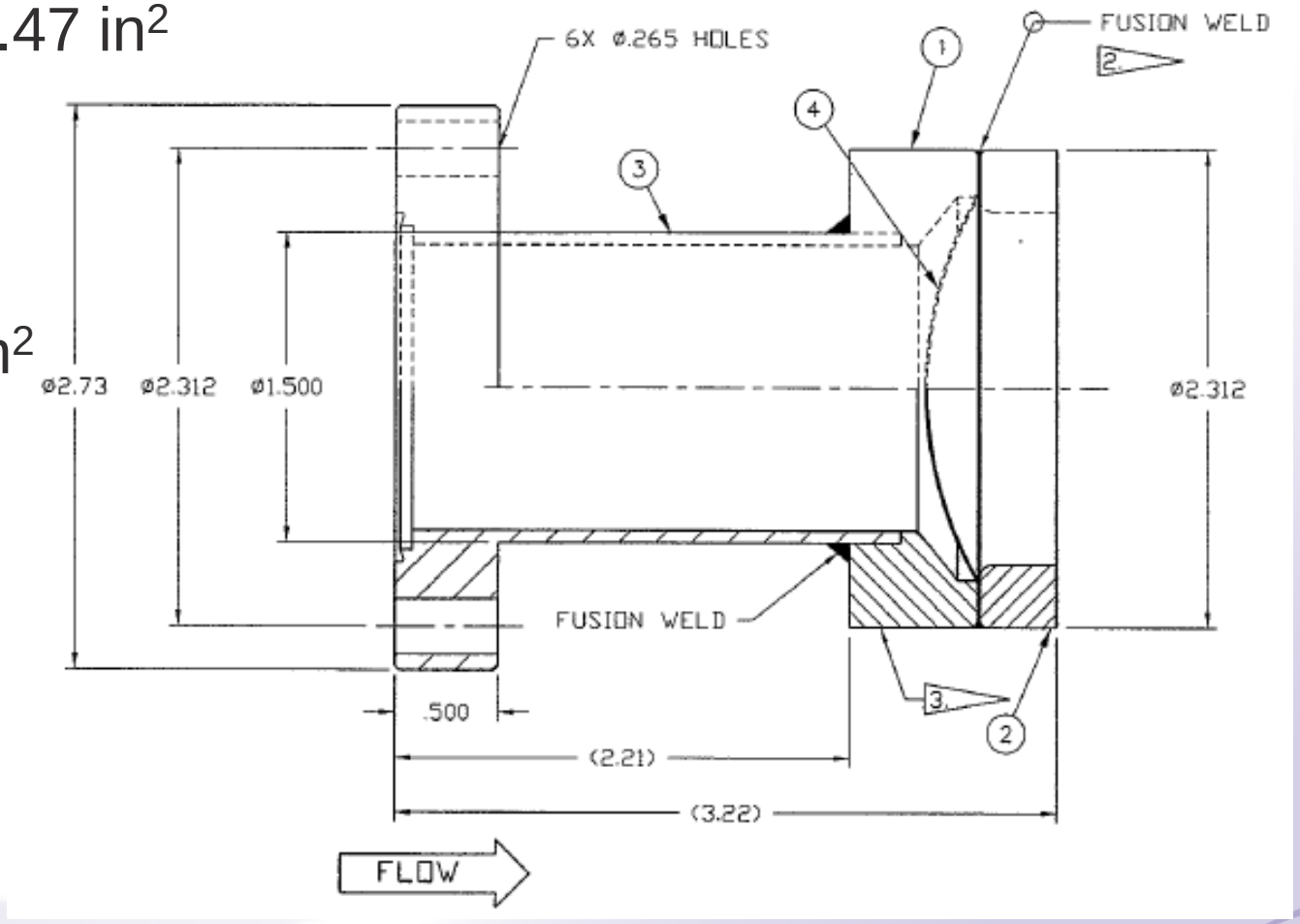

B. Air condensing on beam tube side of cavity
Relief on Helium Side

- Loss of beam-tube vacuum to air
  - **38 kW/m^2 flux from condensing air**
    - Cavity Area inside helium vessel: 1.6 m^2
    - Q input ≈ 60 kW
    - Relief Rate: 3.6 kg/s Helium
    - Relief Area required: 6 in^2 (Coefficient of Discharge method)
    - Flow Resistance method: DP: 6.5 psid (available 8 psid)

- Loss of Insulating vacuum to air
  - **5 kW/m^2 flux with MLI**
    - Helium vessel and Ballast tank Area: 5.5 m^2
    - Q input ≈ 28 kW
    - Relief Rate: 1.6 kg/s Helium
    - Relief Area required: 3.5 in^2
- Relief
  - 4" Burst Disk 8 psig, BS&B LPS: 8 psig, ASME UD stamped
    - Flow Area MNFA: 12.5 in^2

SCRF GUN

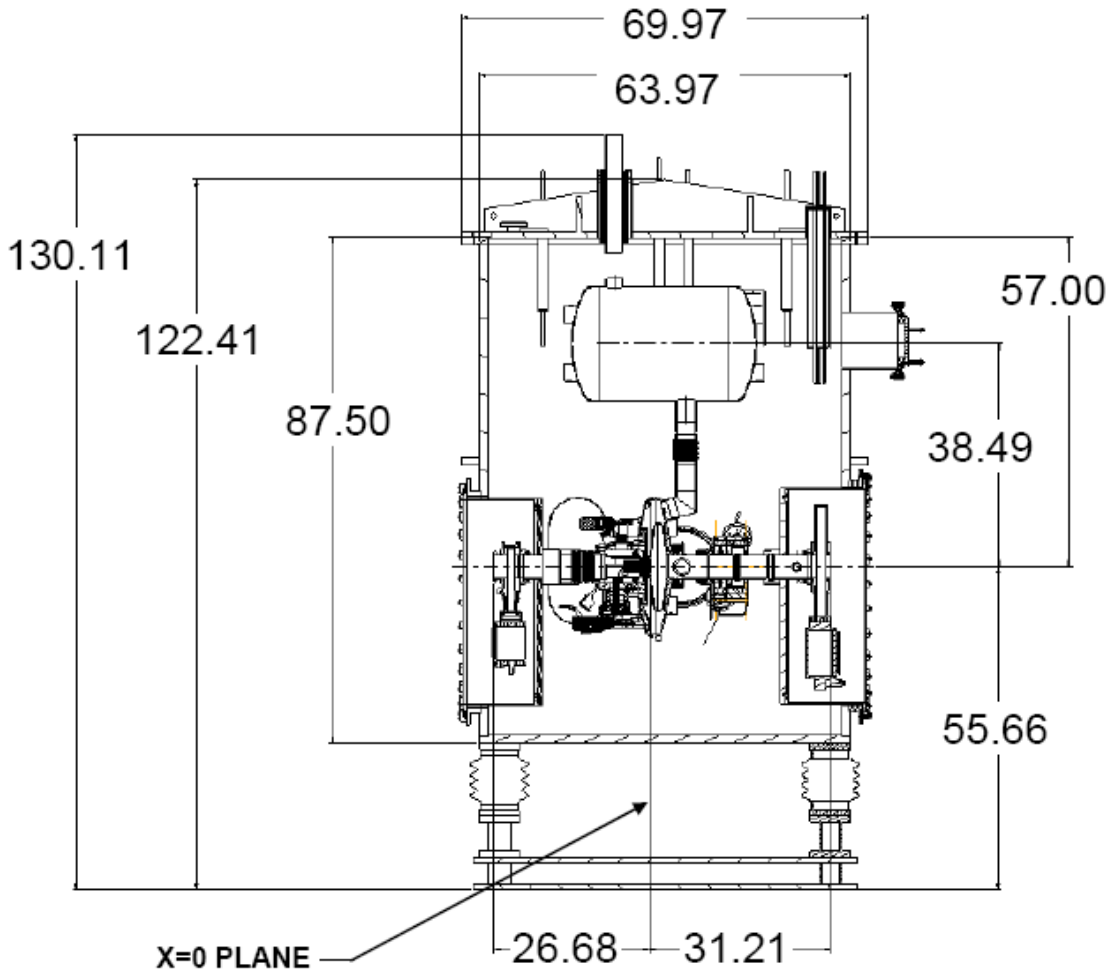

BROOKHAVEN
NATIONAL LABORATORY

SCRF GUN

- Air leak into beam-tube vacuum:

  A. Small leak of air into beam tube: Relief on beam-tube side

  - Air accumulates; freezes/liquefies
  - Released during warm-up of cavity

  B. Large leak of air: Relief on helium side

  - Air condensing on beam tube side of cavity
  - Boil-off of helium in cavity

- Helium Leak from Cavity breach

  C. Vaporization of helium: Relief on beam-tube side

  - Liquid helium eventually wets area to gate valves
  - Heat transfer from walls to helium
  - Condensing of Air on surface outside of insulating vacuum

SCRF GUN
A & C. Small UHV Air Leak, Helium Leak into UHV Side Relief on UHV Side

- **A. Accumulated air case: Q < 1 kW**

- **C. Helium leak from Cavity breach**
  - **Heat Input:** From condensing air on surface outside insulating vacuum volume 38 kW/m^2 flux
  - **Surface Area, outside insulating vacuum: 0.040 m^2 each end**
    - Q input ≈ 1.6 kW
    - Saturated vapor
    - Relief Rate: ≈ 0.1 kg/s Helium

  - **Relief Area required: 0.2 in^2** (Coefficient of Discharge method)
  - Tube Cross sectional Area: 1.47 in^2
  - Burst Disk Area: 2.32 in^2

SCRF GUN
B. Air condensing on beam tube side of cavity Relief on Helium Side

- Loss of beam-tube vacuum to air
  - **38 kW/m^2 flux from condensing air**
    - Gun Cavity Area inside helium vessel: 0.26 m^2
    - Q input ≈ 10 kW
    - Relief Rate: 0.6 kg/s Helium
    - Relief Area required: 6 in^2 (Coefficient of Discharge method)
    - Flow Resistance method: DP= 6.5 psid (available 8 psid)

- Loss of Insulating vacuum to air
  - **5 kW/m^2 flux with MLI around helium vessel**
    - Helium vessel and Ballast tank Area: 2.45m^2
    - Q input ≈ 14.7 kW
    - Relief Rate: 0.87 kg/s Helium
    - Relief Area required: 1.6 in^2 (Coefficient of Discharge method)
- Relief
  - 2" Burst Disk 8 psig, BS&B LPS: 8 psig, ASME UD stamped
    - Flow Area MNFA: 3.36in^2

LESHC ERL 5-Cell Cavity Review

Beamtube Pressure Relief

May 8, 2008

G. McIntyre

LESHC ERL 5-Cell Cavity Review

Beamtube Pressure Relief May 8, 2008

- Agenda
  - LESHC Safety Review Status
  - Review of 5-cell cavity layout
    - Helium vessel
    - Cavity
  - Burst disk locations
  - Explanation of pressure limits of the 5-cell cavity

LESHC ERL 5-Cell Cavity Review

Beamtube Pressure Relief May 8, 2008

- Agenda (cont'd)
  - Cryomodule/Helium Vessel Relief System (R. Than)
    - Design
    - Supporting Calculations
    - Electron Gun Vacuum Beamtube Relief Approach
  - Beamtube Vacuum Relief System (R. Todd)
    - Design
    - Supporting Calculations
  - Electron Gun Vacuum Beamtube Relief & Weld Test Plans

LESHC ERL 5-Cell Cavity Review

Beamtube Pressure Relief May 8, 2008

- LESHC Safety Review Status
  - Committee review of 5-cell cryogenics system conducted May 2006
    - (LESHC Minutes# 06-06)
    - All Action Items answered and archived in ERL's LESHC "folder"
  - This review requested to address 10CFR851 requirement of protecting vacuum systems with chance of backfilling with pressurized gas

LESHC ERL 5-Cell Cavity Review

Beamtube Pressure Relief May 8, 2008

5-cell Cavity He Vessel & Ballast Tank Volumes

Ballast Tank (550 liters)

Helium Vessel (150 liters)

SRF Cavity

Fundamental Power Coupler

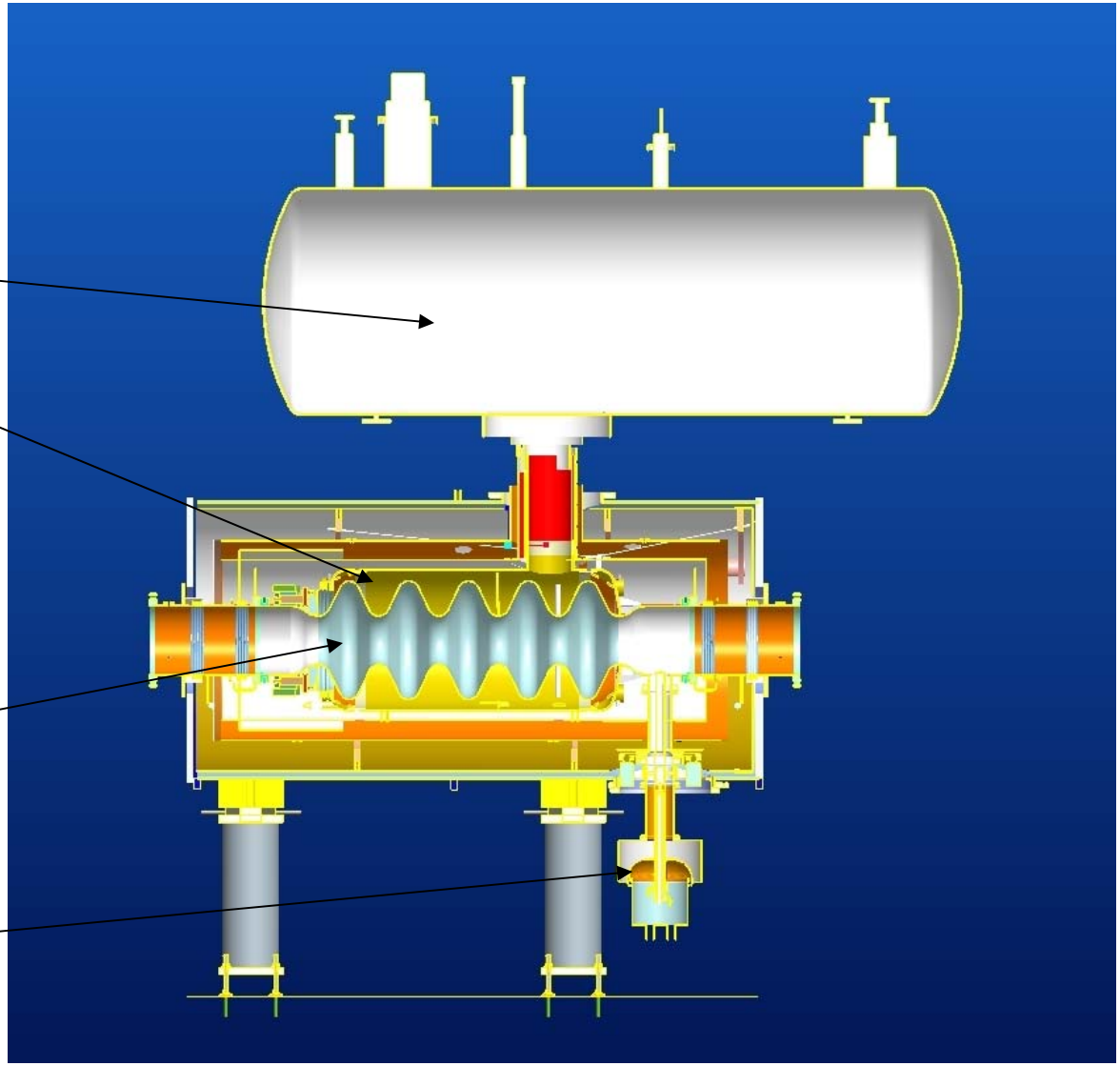

Non-cryomodule components not shown for clarity

LESHC ERL 5-Cell Cavity Review

Beamtube Pressure Relief May 8, 2008

- 5-cell Cavity/Helium Vessel Layout

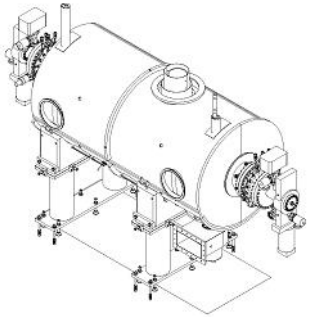

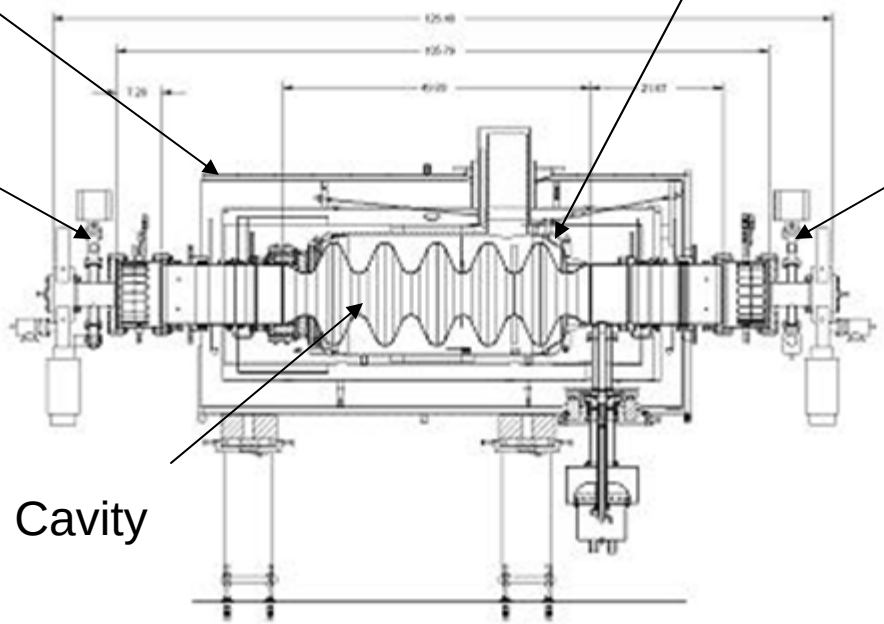

LESHC ERL 5-Cell Cavity Review

Beamtube Pressure Relief May 8, 2008

- Cavity Pressure Relief Criteria
  - ANSYS analysis revealed local yielding at a pressure of 44 psia (Analysis reviewed in LESHC minutes of 05/06)
  - I.A.W. ASME Code 2/3 of 44 psia taken at maximum pressure => 29.9 psia
  - Vendor suggested maximum cavity pressure of 26 psia. This produced a MAWP of 23.6 psia.
  - To protect cavity a reliable relief pressure device was sought to open at < 8.6 psig

LESHC ERL 5-Cell Cavity Review

Beamtube Pressure Relief May 8, 2008

- Cavity Pressure Relief Criteria (cont'd)
  - BS&B burst disk similar to those used on JLAB/SNS SRF cavity available at 7 psig burst pressure. (Actual range 5-7 psig)
  - Helium vessel relief valve set at 5 psig and burst disk at 8 psig- disk primary relief device
    - Lower relief valve pressure setting is to allow for expected spikes in pressure during initial cavity cooldown without rupturing disk

LESHC ERL Electron Gun

Beamtube Pressure Relief Plan May 8, 2008

- ERL e-Gun – Helium-cooled SRF cavity
  - Plan is use same approach for beamtube relief
    - Same maximum allowable pressure
      - For machine protection
    - Same calculation assumptions
      - Greatly reduced He volumes (10% of 5-cell)
    - Same relief scenario
      - Relief valves
      - Burst disks
  - Calculation Approach:
    - Cryogenic & UHV Systems
      - Same as 5-cell
  - Weld Test Plan for Cavity
    - G. McIntyre

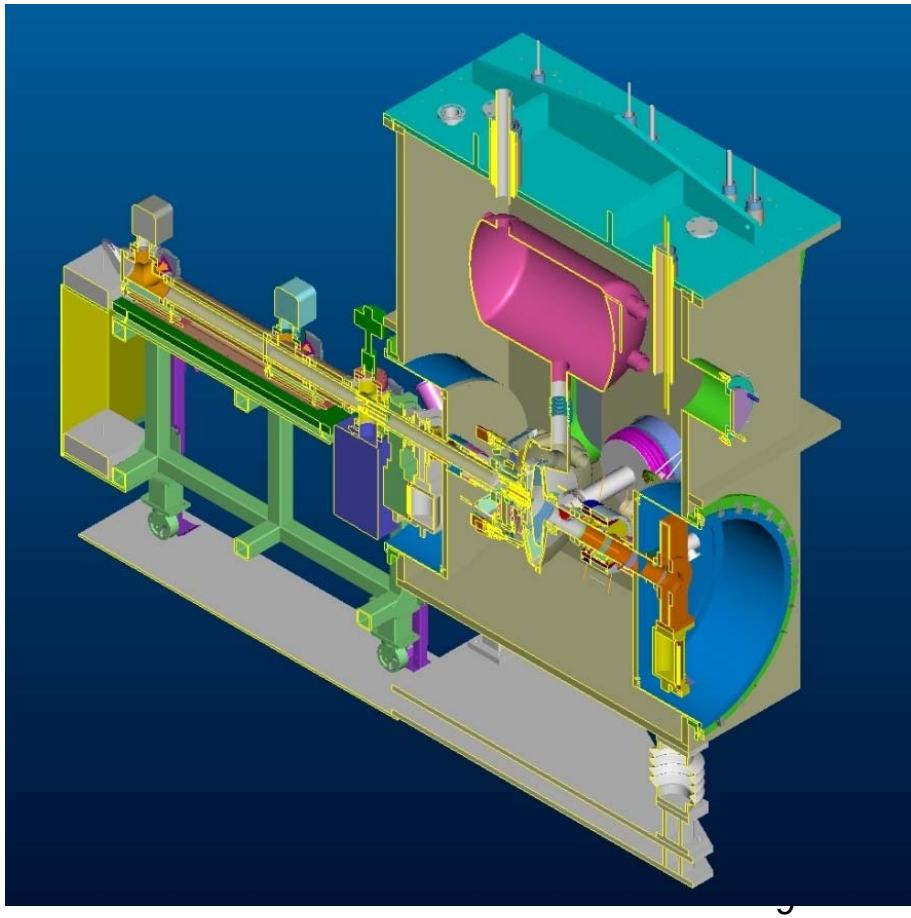

LESHC ERL Electron Gun

Beamtube Pressure Relief Plan May 8, 2008

- Close-up cross-section of Gun Cryomodule

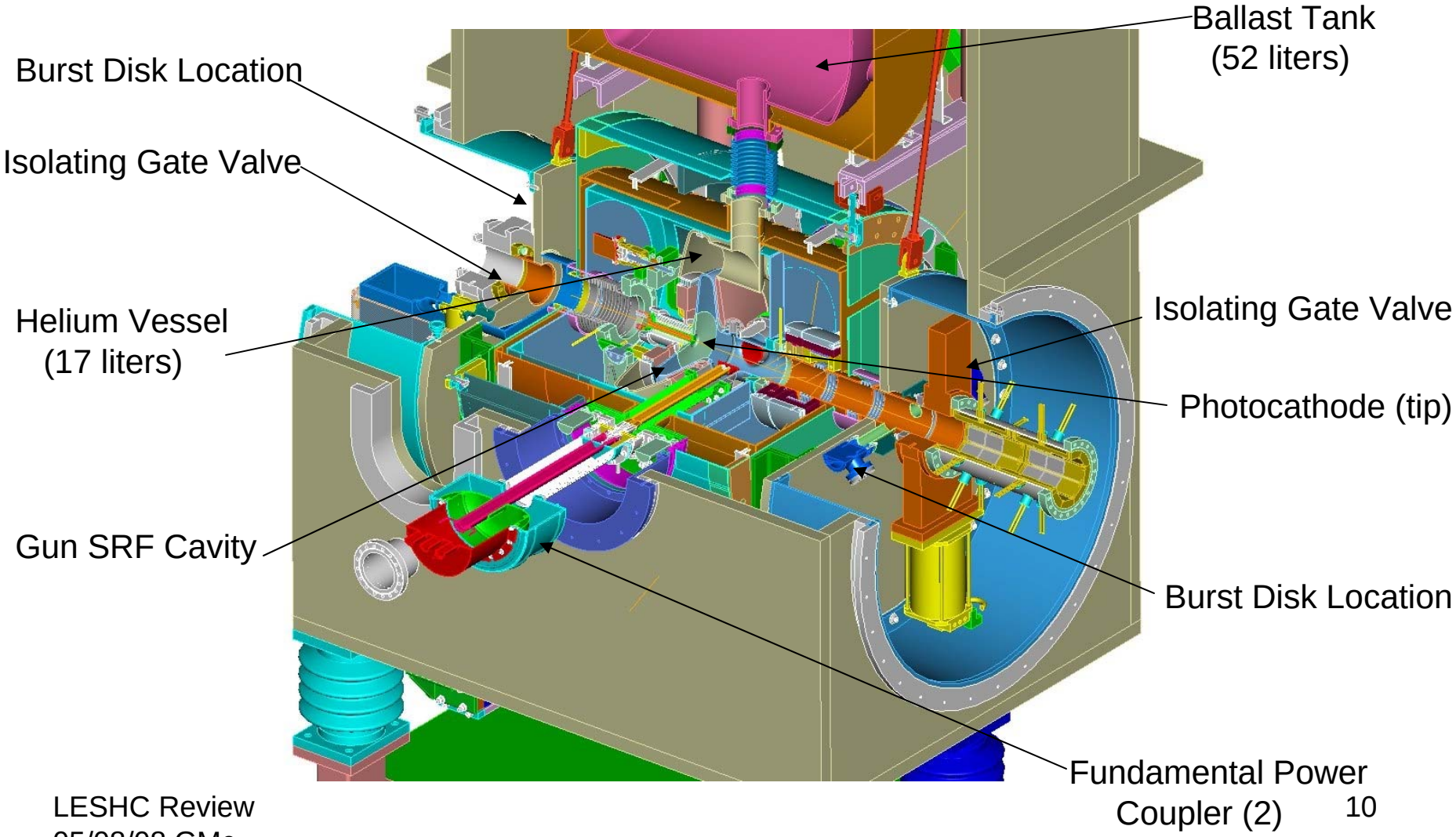

LESHC ERL Electron Gun

Gun Cavity Weld Test Plan May 8, 2008

- Approach to Niobium Cavity Weld Testing

Note: Niobium (Nb) is **not** an ASME accepted material

  - Determine all pressure boundary welds in design
  - Categorize welds into types (joint, angle, multi-pass) & material thicknesses
  - Determine most conservative weld within a given group (type and thickness)
  - Secure material certifications for all Nb to be used
  - Develop Weld Procedures Specifications (WPS) & EB weld parameters (QW-260) for all welds

LESHC ERL Electron Gun

Gun Cavity Weld Test Plan May 8, 2008

- Weld Plan Approach (cont'd)
  - Have qualifying welder(s) perform most conservative welds according to WPS and within QW-260 parameters
  - Have tensile tests and guide bend tests performed on selected welds I.A.W. ATSM A-370 at ~293K
  - Have CVN Impact Testing done at 77K on thickest material of each weld group
  - Execute Fracture Mechanics Analysis to verify acceptable material performance at 2K

LESHC ERL Electron Gun

Gun Cavity Weld Test Plan May 8, 2008

- Advanced Energy Systems: List of Gun Cavity Welds

E. B. Weld Test Speciment Requirements							
Item No.	**Assembly No.**	**Assembly Name**	**Joint Description**	**Joint Thickness**	**Base Materials**	**Type of Weld**	**Weld Angle**
1	1242G00017-11	End Body / Pick-Up Half Nipple	Butt, Reduced Thickness, Interlocking, Back Relief	.070 Nb .070 Nb	Nb RRR250> / Nb RRR250>	One side full penetration smooth under bead	0°
2**	1242G00017-9	End Body / FPC Half Nipple	Butt, Reduced Thickness, Interlocking, Back Relief	.070 Nb .070 Nb	Nb RRR250> / Nb RRR250>	One side full penetration smooth under bead	0°
3*	1242G00017-7	End Body / FPC Stiffener	Butt	N/A	Nb RRR250> / Nb RRR250>	Keyhole both side .11 from each side	10°
4	1242G00011-3	End Group Assy. / End Body Assy. / End Disk Assy.	Angle Butt, Interlocking	.118 Nb .118 Nb	Nb RRR250> / Nb RRR250>	Keyhole one side with a Cosmetic Pass	13°
5	1242G00005-11	Choke Hub Assy. / Choke Hub / Inner Tube	Butt, Interlocking	.253 Nb .253 Nb	Nb RRR250> / Nb RRR250>	Keyhole one side full penetration	0°
6	1242G00005-7	Choke Hub Assy. / Item 7 / Outer Tube	Angle Butt, Interlocking	.165 Nb .335 Nb	Nb RRR250> / Nb RRR250>	Keyhole one side .25 penetration	30°
7	1242G00015-3	FPC Half Cell Assy. / FPC Hub	Angle Butt, Interlocking	.157 Nb .157 Nb	Nb RRR250> / Nb RRR250>	Keyhole outside.125 Min. Cosmetic inside .031 Min.	6.5° 6.5°
8	1242G00009-3	Cathode Half Cell Assy. / Cathode Half Cell	Butt, Interlocking	.157 Nb .157 Nb	Nb RRR250> / Nb RRR250>	Keyhole outside.125 Min. Cosmetic inside .031 Min.	0° 9°
9	1242G00003-3	Cavity Choke Hub Assy. / Cathode Half Cell Assy. / Choke Hub Assy.	Angle Butt, Interlocking	.157 Nb .157 Nb	Nb RRR250> / Nb RRR250>	Keyhole outside .125 Min. Cosmetic inside .031 Min.	19.5°
10	1242G00021-3	Pick-Up Half Nipple ASSY. / Pick-Up Flange / Pick-Up Tube	Butt	.330 Nb .330 TI	Nb RRR250> / Nb55Ti	Keyhole one side .30 penetration	0°
11*	1242G00021-3	Pick-Up Half Nipple ASSY. / Pick-Up Flange / Pick-Up Tube	Butt	N/A	Nb RRR250> / Nb55Ti	Cosmetic seal one side	10°
12**	1242G00017-3	End Body Assy. / Cavity End Flange	Butt	.330 Nb .330 TI	Nb RRR250> / Nb55Ti	Keyhole one side .30 penetration	0°
13*	1242G00017-3	End Body Assy. / Cavity End Flange	Butt	N/A	Nb RRR250> / Nb55Ti	Cosmetic seal one side	**5°**
14	1242G00013-3	End Disk Assy. / Disk	Butt	.375 Nb .250 TI	Nb RRR250> / Nb55Ti	Keyhole one side full penetration	0°
15	1242G00007-3	Cathode Flange Assy. / Extension Tube / Cathode Flange	Butt, Interlocking	.260 Nb .260 TI	Nb RRR250> / Nb55Ti	Keyhole one side full penetration	0°
16	1242G00001-3	Cavity Choke Hub Assy. / Tuner Dish	Butt	.375 TI .313 TI	Nb55Ti / Nb55Ti	Keyhole one side full penetration	0°
17	Base Line Tension Specimen covers Items 1, 4, 5, 6, and one side of Items 10, 14, 15			N/A	Material Nb RRR>250 / HT#505257 / .118 thick		N/A
18	Base Line Tension Specimen covers Items 7, 8, 9			N/A	Material Nb RRR>250 / HT#505152 / .157 thick		N/A
19	Base Line Tension Specimen covers Items16 and one side of Items 10, 14, 15			N/A	Material Nb55Ti / HT#595113 / .250 thick		N/A
20	Base Line Tension Specimens and Charpy V-notch Specimens			N/A	Material Large Grain Niobium		N/A
21	Base Line Tension Specimen covers Item 8			N/A	Material Large Grain Niobium		N/A
22	Bend Test Specimen covers Item 8		Butt, Interlocking	.157 Nb .157 Nb	Nb RRR250> / Nb RRR250>	Keyhole outside.125 Min. Cosmetic inside .031 Min.	0° 9°
23	Bend Test Specimen covers Item 9		Angle Butt, Interlocking	.157 Nb .157 Nb	Nb RRR250> / Nb RRR250>	Keyhole outside .125 Min. Cosmetic inside .031 Min.	19.5°
24	Bend Test Specimen covers Item 14, 15		Butt, Interlocking	.157 Nb .157 Ti	Nb RRR250> / Nb55Ti	Keyhole one side full penetration	0°
25	Bend Test Specimen covers Item 16		Butt	.157 Ti .157 Ti	Nb55Ti / Nb55Ti	Keyhole one side full penetration	0°
Notes:	Items marked with a * are not a structural weld and should not require a specimen only a visual inspection for porosity. Items marked with a ** are covered by another item.						

LESHC ERL Electron Gun

Gun Cavity Weld Test Plan May 8, 2008

- Proposed test plan from AES weld list

Electron Gun Weld Test Matrix												
						3 specimens minimum tested						
Assigned AES Weld #	Weld Type	Weld Thicknesses (in./in.)	Weld Angle	Material Types		Tensile at 300K		Guide Bend Test (Root) at 300K	Guide Bend Test (Face) at 300K	Charpy V-notch Impact at 77K		Fracture Mechanic Analysis
5	Interlocking Butt	0.253 / 0.253	-	RRR / RRR		X		X	X	0.253 / 0.253		X
8	Interlocking Butt	0.157 / 0.157	-	RRR / RRR		X		X	X			
4	Angle Interlocking Butt	0.165 / 0.335	13º	RRR / RRR		X		X	X			
6	Angle Interlocking Butt	0.165 / 0.335	30º	RRR / RRR		X		X	X	0.335 / 0.335		X
* 7	Angle Interlocking Butt	0.157 / 0.157	6.5º	RRR / RRR		X		X	X			
9	Angle Interlocking Butt	0.157 / 0.157	26º	RRR / RRR		X		X	X			
10	Butt	0.330 / 0.330		RRR / NbTi		X		X	X			
14	Butt	0.375 / 0.250		RRR / NbTi		X		X	X	0.375 / 0.375		X
15	Butt	0.260 / 0.260		RRR / NbTi		X		X	X			
16	Butt	0.375 / 0.313		NbTi / NbTi		X		X	X	0.375 / 0.375		X

*- most severe angle & worst case

CVN testing is a materials test – thickest material example is worst case.

LESHC ERL Electron Gun

Gun Cavity Weld Test Plan May 8, 2008

- The plan is to perform this level of testing, using this approach, on welding of all ASME non-accepted materials in the gun.

- Is this approach acceptable to the LESHC / C-AD ASSRC?

ERL: High Beta 5 Cell Cavity Cryogenic & Pressure Safety Committee Review

ERL 5-Cell SRF Beam Line Vacuum Failure Analysis

May, 2008

BROOKHAVEN NATIONAL LABORATORY

a passion for discovery

Office of Science

U.S. DEPARTMENT OF ENERGY

Beam Line Vacuum Failure

- Two failure modes
  - Small leak into beam line and cryopumped by cold surfaces of SRF cavity.
  - Catastrophic venting of beam line while cold resulting in significant solid air formation on the cold surfaces of the SRF cavity.

CRYOMODULE CONFIGURATION

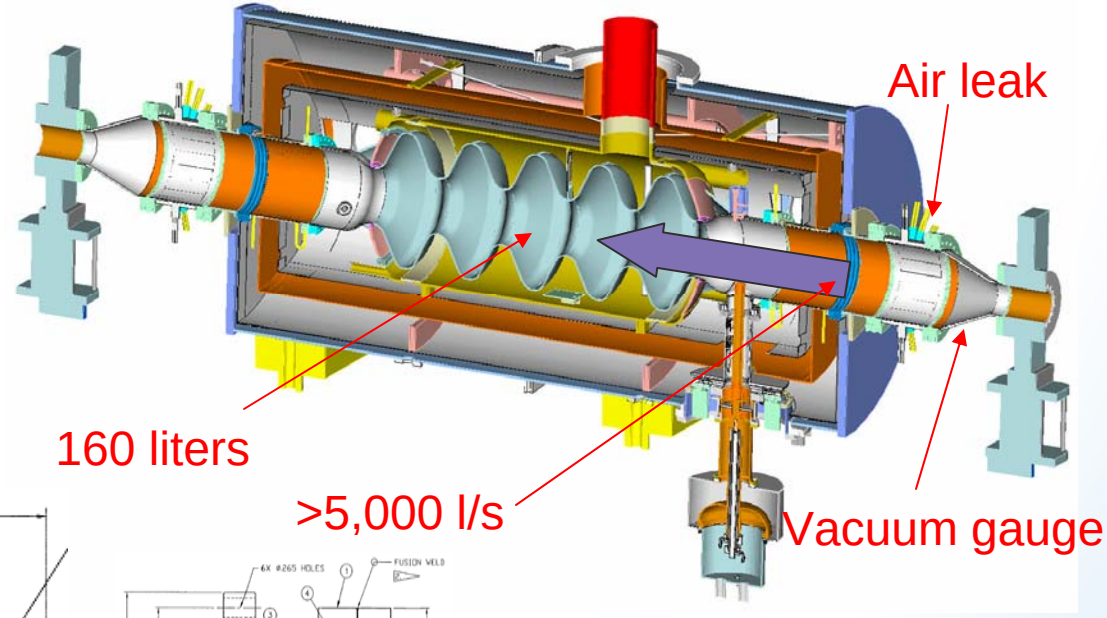

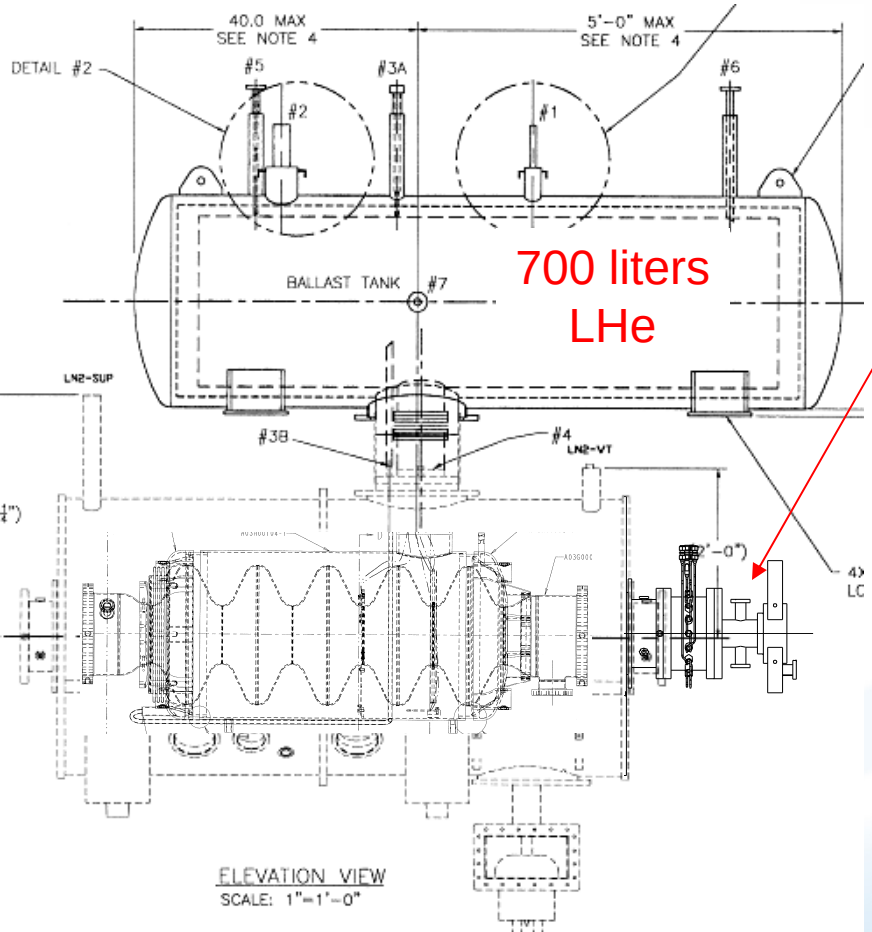

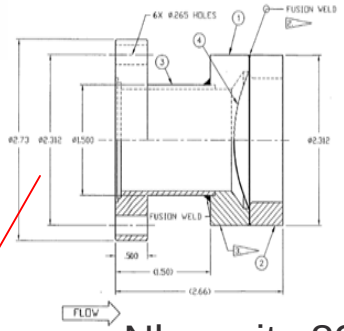

Burst disk
One on each end

Nb cavity 82 Kg
Ti He vessel 63.5 Kg
Therm. Trans. 29.5 Kg ea
Adaptors 31.3 Kg ea
Valves 35.4 Kg ea
Fe Abs 31.8 Kg ea
Surface area warm ends 0.67 m^2
String volume (valve to valve) 160 liters

BROOKHAVEN NATIONAL LABORATORY

Small leak into beam line envelope.

- For a given leak rate, calculate:
  - Indicated pressure of beam line at warm end.
    - Calculate speed of cavity
      - S = 11.6 A , 5300 l/s
    - Calculate Pressure as a function of leak size.
      - P= Q/S, where Q leak rate (Torr l/sec)
  - Heat load on cavity due to leak.
    - Using nitrogen heat capacity Cp = 29 J/mol K
      - H(watts) = 0.511Q
  - Time for cavity to pump one STP volume of gas.
    - Calculate volume of string assembly
      - 160 liters = $1.2e^5$ Torr liters
      - Time (hrs) = 33.9 / Q
  - Express graphically

Pressure, Throughput and Heat Load as a Function of Air Leak Rate

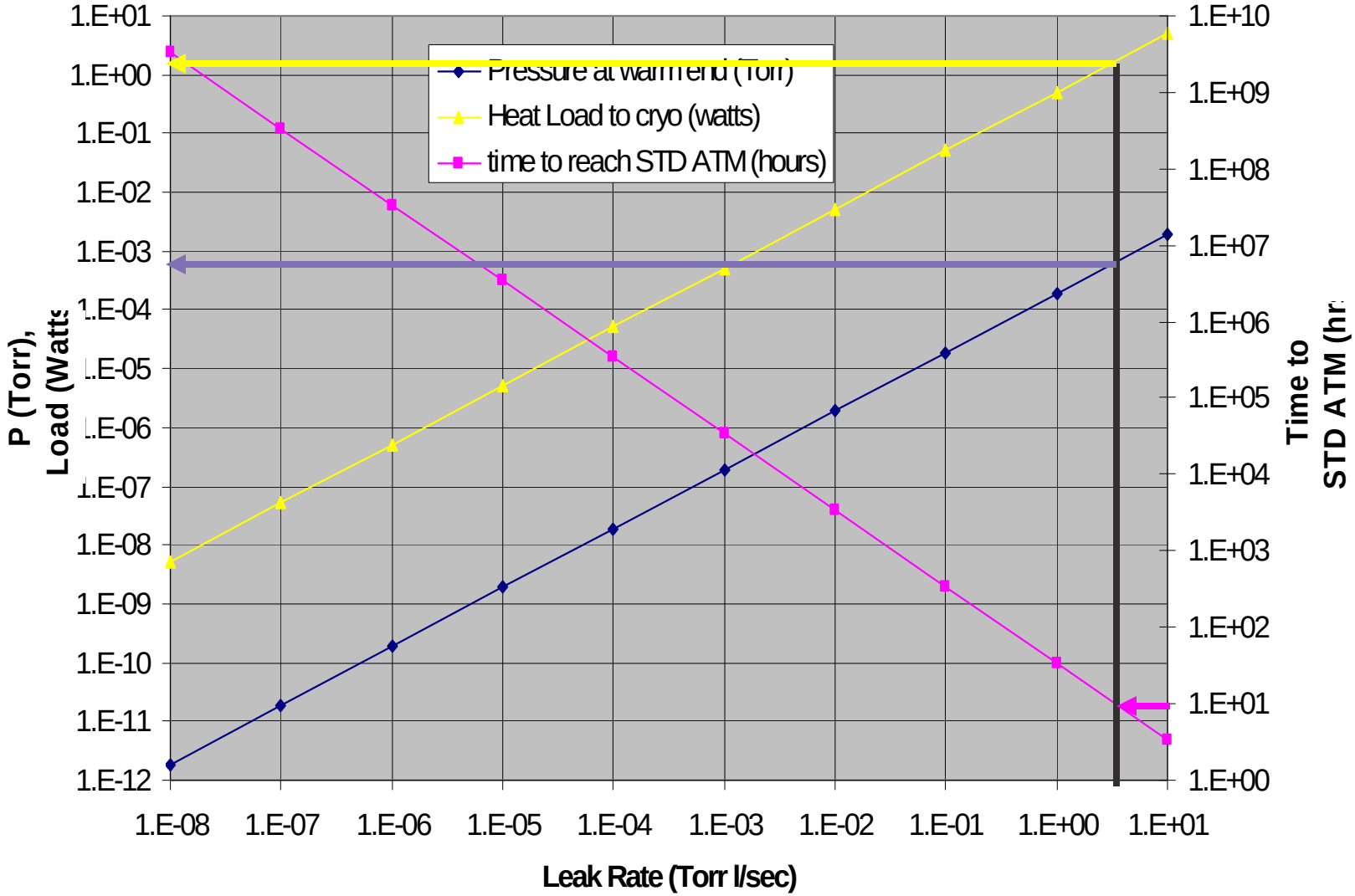

Summary

- For leak rates below ~2 Torr l/s and pressure below ~ 1 micron, the cavity will not go positive upon warmup.
- Gauge readings can be used to predict expected pressure upon warm up.

Catastrophic Venting of Beam Line Vacuum While Cold.

- Calculate quantity of air cryopumped by cold cavity.
  - Calculate total heat required to evaporate helium (convert to gas) and raise temp of cavity to 80K.
    - Heat required to convert liquid to gas
      - Using
        - He heat of vaporization (0.0829 KJ/mole)
        - 700 liters LHe, 85.4 Kg
    - 1,770 KJ
    - Heat required to raise Nb cavity to 80K
      - Using
        - Cp (Nb, 80K) = 0.133 J/g K
        - Debye temp of 275
        - Nb Cavity mass 82 Kg
    - 869 KJ
    - Heat required to raise Ti vessel to 80K
      - Using
        - Cp (Ti, 80K) = 0.109 J/g K
        - Debye temp of 380
        - Ti vessel mass 63.5 Kg
    - 554 KJ
    - Total heat = 3193 KJ

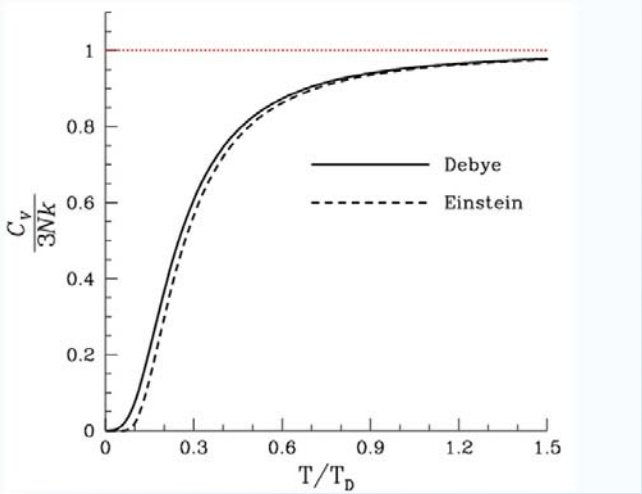

Catastrophic Venting of Beam Line Vacuum While Cold.

- Using
  - nitrogen heat of vaporization, 5.57 KJ/mole K (O_2; 6.82)
  - Nitrogen heat of fusion 0.36 KJ/mole K (O_2; 0.44)
  - Total heat of 3193 KJ
    - For nitrogen only; 15,102 grams, 17.4 liters LN_2
    - Using higher latent heats for oxygen would reduce this number
- Capacity of five cavity convolutions
    - 14.4 liters
  - Most liquid will pool in convolutions

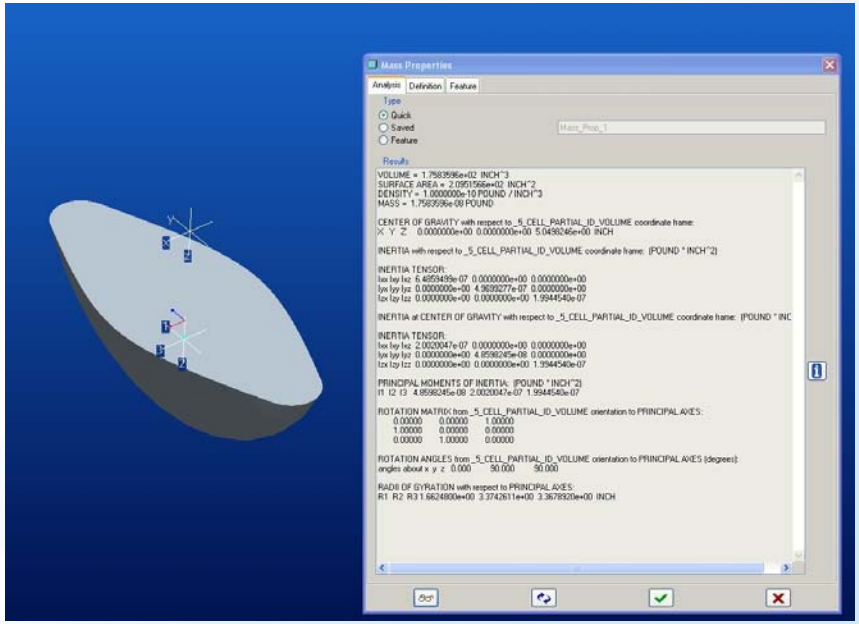

Catastrophic Venting of Beam Line Vacuum While Cold.

- Calculate maximum outflow rate of air upon cavity warming.
  - Once equilibrium is reached, melting and evaporation of solid air will be driven by heat load generated from gas convection due to warm ends.
    - Calculate heat load due to gas convective heating from warm ends using general form of the free convection formula for laminar flow in unconfined space.
      - 180 Watts.
      - Conservative because enclosed air space would yield a lower convective heat load.
      - Assume additional background heat load of 50 Watts
      - Use total heat load of 230 Watts.
    - Calculate maximum outflow rate.
      - Use nitrogen heat of fusion 0.72 KJ/mole to calculate conversion rate to liquid.
      - Although solid air will pool in convolutions, conservatively assume all melting air is instantaneously converted to 300K gas at the warm ends due to high heat capacity (37,500 KJ). The yields the highest possible flow rate.
      - 1.7 CFM

Catastrophic Venting of Beam Line Vacuum While Cold.

- For the given burst disk and vent line configuration, calculate flow rate at 70°F.
  - Using Darcy's formula for subsonic compressible flow:
    - $q_m = 678\ Yd^2(dP\ (P_1)/KT_1S_g)^{1/2}$
      - 217 CFM @ 6 psig

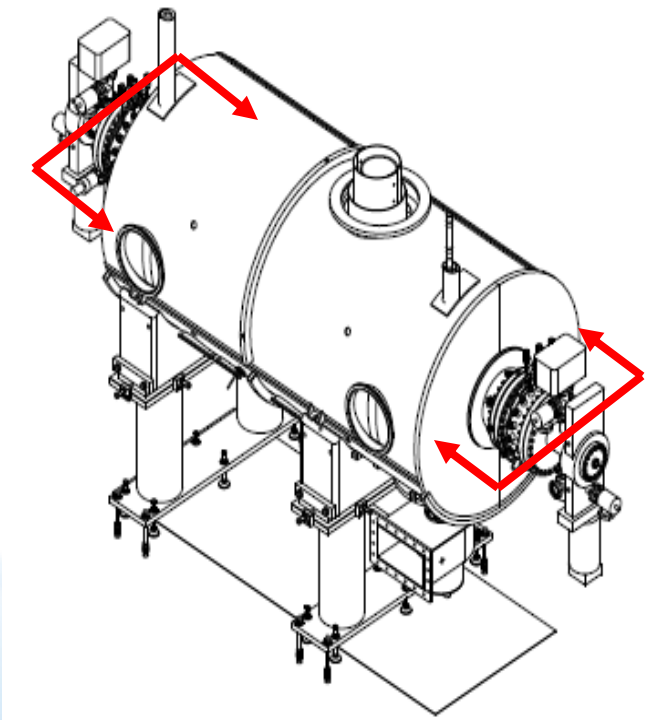

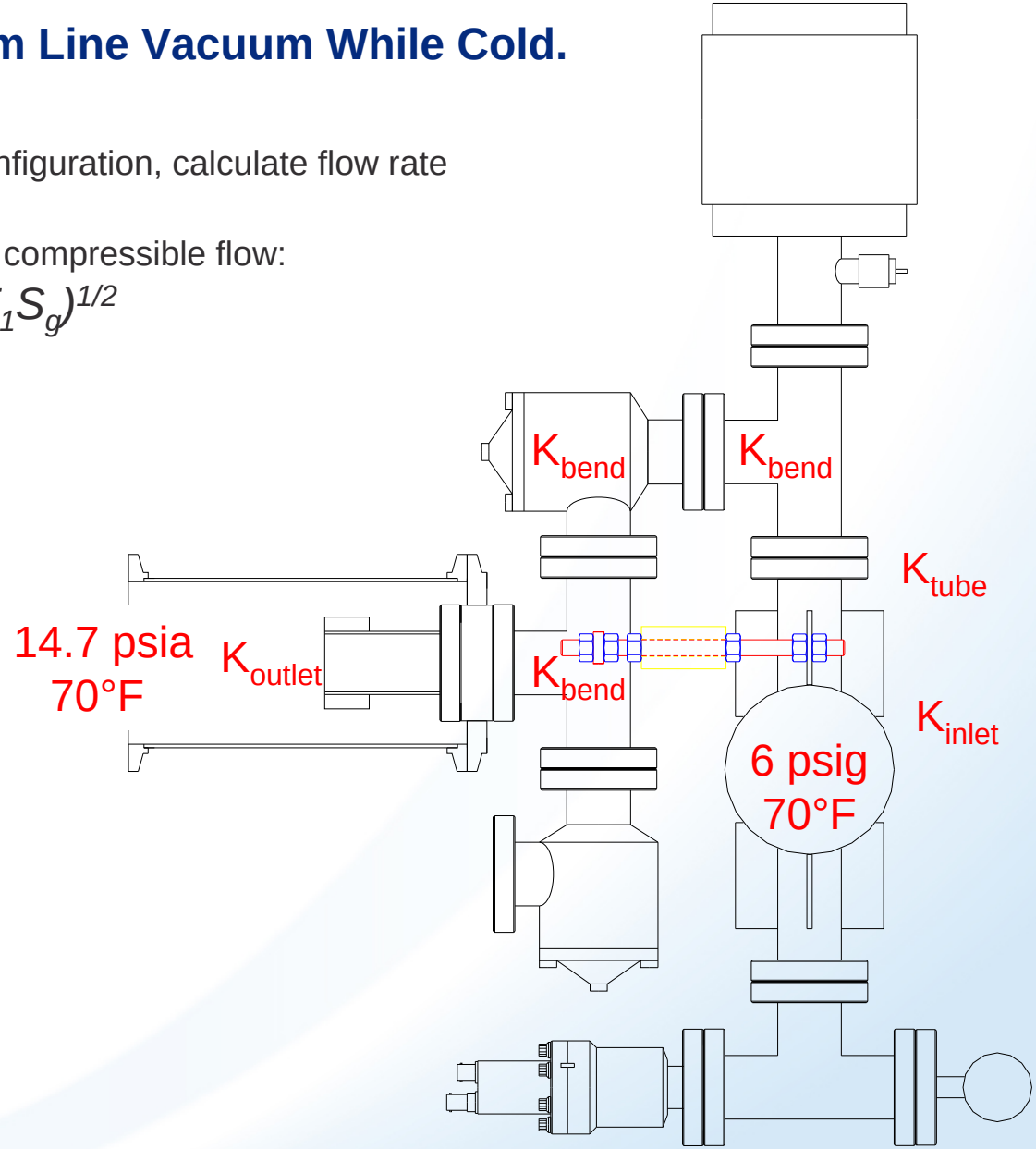

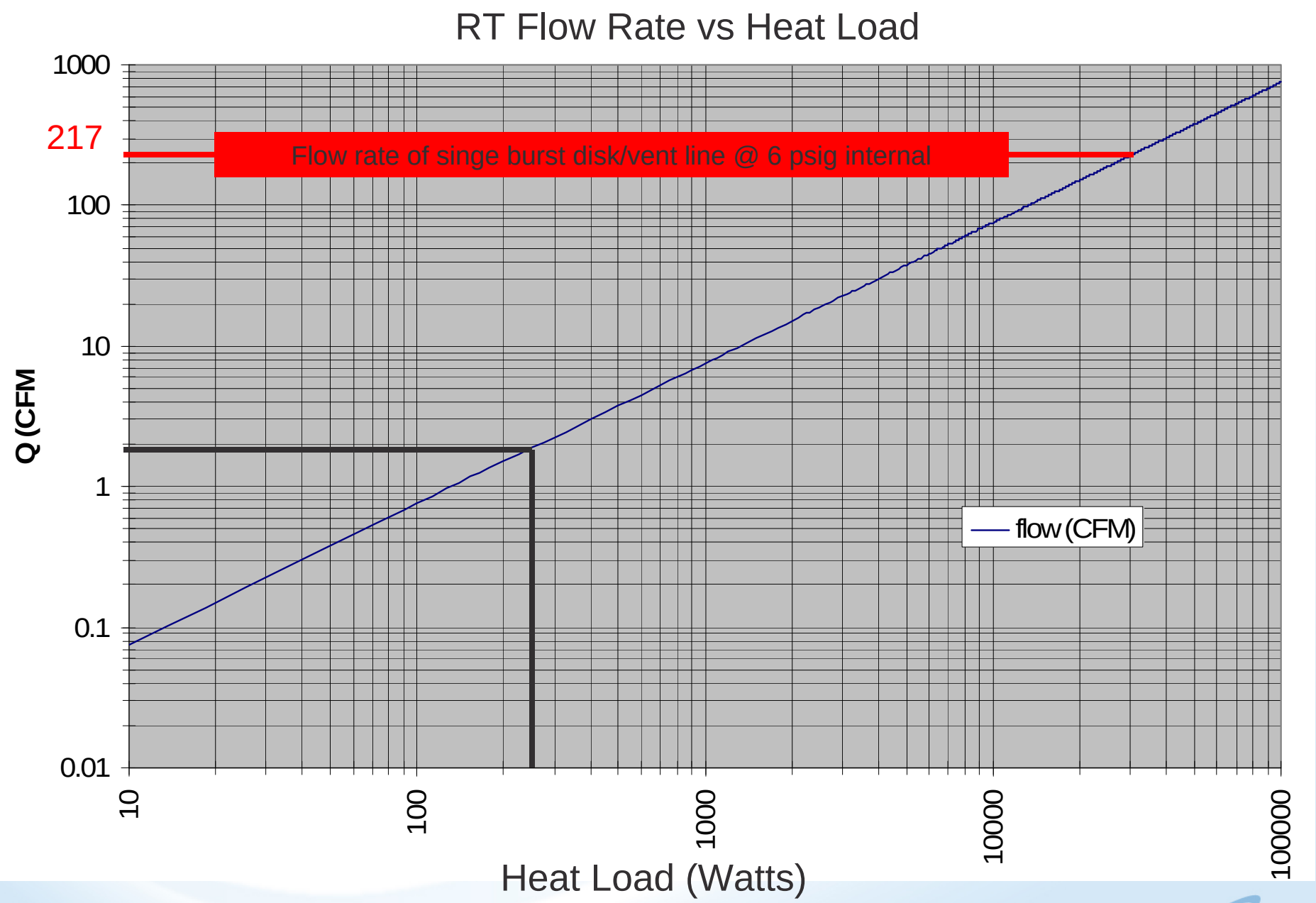
RT Flow Rate vs Heat Load
1000
217
100
10
1
0.1
0.01
Q (CFM
Flow rate of singe burst disk/vent line @ 6 psig internal
flow (CFM)
10
100
1000
10000
100000
Heat Load (Watts)

Summary

- Catastrophic beam line venting will result in cryo condensation of air (17.4 liters LN_2).
  - This calculated quantity is conservatively a maximum and based on steady state flux to the cold walls with a constant sticking coefficient of unity and no end effects.
    - Final quantity of condensed solid air will be limited by:
      - Thermal resistance due to significant cryo condensed layers.
      - Convective end cooling of room temperature end components.
- Upon warming from end heating, the reversal of air flow will be sufficiently slow to be handled by the burst disks.
    - 1.7 CFM
  - This flow rate is based on complete heating of nitrogen to 293K prior to exit which leads to a conservatively high value.
  - Calculated relief capacity for a single burst disk for 293K gas
    - 217 CFM @ 6 psig internal
    - Due to the low flow rate and conservative assumptions, a more rigorous analysis is not necessary.

Appendix

CASE I THE CASE OF SMALL AIR LEAKS

CALCULATE THE INDICATED PRESSURE, HEAT LOAD AND TIME TO BLEED 1 STD ATM VOLUME OF GAS AS A FUNCTION OF LEAK RATE

1) $P = \frac{Q}{S_c}$ WHERE Q = LEAK RATE Torr ℓ/sec
S_c = SPEED OF CAVITY ℓ/sec

(WELCH)

ASSUME SPEED OF CAVITY

$$S_c = 11.6A = 11.6\,\frac{\pi(24)^2}{4} = 5300\ \ell/\text{sec}$$

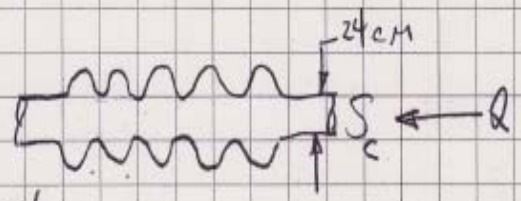

2) HEAT LOAD ON CAVITY

ASSUMING STICKING $\alpha = 1$

$$C_p N_2 = \frac{1040\,J}{kg\,^\circ K}\,\frac{28\,g}{Mole}\,\frac{kg}{1000\,g} = 29.12\ \text{Joule Mole}^{-1}\,^\circ K^{-1}$$

(WHITE)

$$H = \frac{29.12\,J}{Mole\,^\circ K}\,\frac{Mole}{22.4\,\ell}\,\frac{293\,^\circ K}{760\,Torr}\,Q\,\frac{Torr\,\ell}{Sec}$$

$$H = 0.511\,Q\ \left(\frac{Joule}{sec}\right)$$

3) TIME TO PUMP ONE SRF VOLUME AT STP.

$$V_{STRING} = 160\,\ell \times 760\,Torr \quad \text{(McINTYRE)}$$
$$= 1.22\times10^5\ Torr\,\ell$$

$$T_{(HRS)} = \frac{1.22\times10^5\ Torr\,\ell}{Q\ Torr\,\ell}\,\frac{Sec}{}\,\frac{HR}{3600\,Sec} = \frac{33.9}{Q}$$

4) EXPRESS 1, 2, 3 GRAPHICALLY

Brookhaven Science Associates
BROOKHAVEN NATIONAL LABORATORY

CASE II CATASTROPHIC BEAM LINE VENTING TO AIR.

1) CALCULATE TOTAL HEAT REQUIRED TO EVAPORATE LHe AND RAISE CAVITY TEMP TO 80°K

$V_{TANK} = 700\,l$

$\rho_{LHe} = 0.122\ g/cm^3$

$\frac{122\,g}{l}\ 700\,l = 85{,}400\ g\ LHe$

A) HEAT TO CONVERT TO GAS

He HEAT OF VAPORIZATION 0.0829 kJ Mole^{-1}

$\frac{0.0829\ kJ}{Mole}\ \frac{85{,}400\ g\ Mole}{4\ g} = 1770\ kJoule$

B) HEAT TO RAISE NIOBIUM CAVITY TO 80°K

$C_{P(Nb)} = \frac{24.6\ J\ Mole}{Mole\ °K\ 93\ g} = \frac{0.265\ J}{g\ °K}$

$\frac{T}{T_{D(Nb)}} = \frac{80}{275} = 0.3 \qquad C_V = 0.5$

$0.265 \times 0.5 = 0.1325\ J/g\,°K$

$\frac{0.1325\ kJ}{kg\ °K}\ 82\ kg\ 80°K = 869\ kJoule$

C) HEAT TO RAISE TITANIUM He VESSEL TO 80°K

$C_{P(Ti)} = \frac{25\ kJ\ Mole}{Mole\ °K\ 48\ g} = 0.52\ \frac{J}{g\,°K} \qquad \frac{T}{T_{D(Ti)}} = \frac{80}{380} = 0.21$

$0.52 \times .2 = 0.11\ J/g\,°K$

$\frac{0.11\ kJ}{kg\ °K}\ 63.5\ kg\ 80°K = 554\ kJ$

Brookhaven Science Associates
BROOKHAVEN NATIONAL LABORATORY

2. CALCULATE QUANTITY OF N_2 CRYO CONDENSED ON COLD CAVITY.

USING N_2 HEAT OF VAPORIZATION of 5.57 $\frac{kJ}{Mole}$

$$\left(1770+869+554\right)\frac{kJ}{5.57\,kJ}\,\frac{Mole}{}\,\frac{28\,g}{Mole} = \frac{16051\,g}{868\,g} = 18.5\,\ell\ LN_2$$

3. CAPACITY OF SRF ASSUMING SOLID AIR POOLS IN BOTTOM OF CONVOLUTIONS.

-CALCULATED USING SOLID MODEL $2.88\,\frac{\ell}{\text{CONVOLUTION}}$

$V = 2.88 \times 5 = 14.4$ LITERS

MOST SOLID AIR WILL POOL IN THE CONVOLUTIONS AND BE CONTAINED.

4. CALCULATE RATE AT WHICH SOLID AIR RETURNS TO GAS.

- SRF CAVITY HAS A BACKGROUND HEAT LOAD OF ~50 WATTS
- HEAT LOAD ON SOLID AIR DUE SOLEY TO GAS CONDUCTION

$$\sim H = \frac{kA(T_2-T_1)}{L}$$

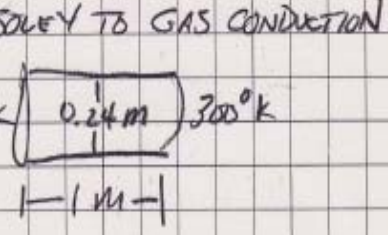

$$= 258\times10^{-3}\,\frac{W}{M\,°K}\,\frac{(.0452\,M^2)(220\,°K)}{1\,M}$$

$= 0.25$ Watts/END

- CALCULATE HEAT LOAD DUE TO FREE CONVECTION

- DUE TO THE CLOSED GEOMETRY, AN ESTIMATE WILL BE MADE USING UNCONFINED CONDITION WHICH WILL YIELD HIGHER THAN EXPECTED HEAT LOAD (CONSERVATIVE)

Brookhaven Science Associates
BROOKHAVEN NATIONAL LABORATORY

USING THE GENERAL FORM OF THE FREE CONVECTION LORENZ EQUATION UNDER LAMINAR FLOW (McADAMS, HEAT TRANS.)

$$\frac{h_c L}{k_f} = 0.54\left[\frac{L^3 \rho_f^2 g \beta_f \Delta T}{\mu_f^2}\left(\frac{C_p \mu}{k}\right)_f\right]^{0.25}$$

WHERE FOR IDEAL GAS $\beta = \frac{1}{T_f}$ (WHITE)

FOR THE CAVITY L IS THE CHARACTERISTIC DIMENSION AND WILL BE TAKEN AS THE DIAMETER

$11\,FT^2 \cdot \frac{144\,IN^2}{FT^2} \cdot \frac{2.54^2\,CM^2}{IN^2}$

$= 10{,}000\ CM^2$

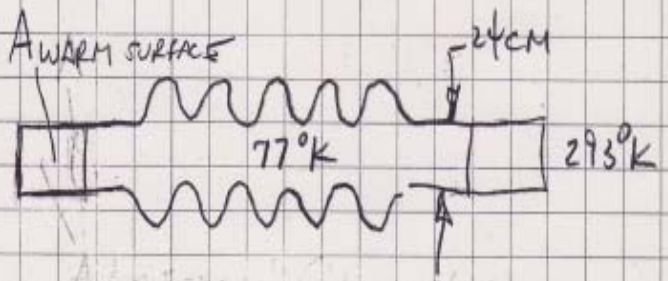

$L = 24\,CM$

$\frac{.5\,kJ}{kg\,°K}\,256\,kg\,(293°K) = 37{,}500\ kJ$

$\rho_f = \frac{28\,g/mole}{.082\,ATM\,\ell/mole\,°K \times 77°K} = 4.4\,\frac{g}{\ell} = 4.4\times10^{-3}\,\frac{g}{CM^3}$

$g = 980\ CM/SEC^2$

$\mu_f = 0.012$ CENTIPOISE OR $1.2\times10^{-4}\ g\,CM^{-1}\,SEC^{-1}$ (McADAMS)

$C_p = 1.04\ J/g\,°K$ (WHITE)

$k_f = 0.0091\ Btu/HR\,FT\,°F$ (McADAMS)

$= 1.6\times10^{-4}\ W/CM\,°C$

$T_f = \frac{293+77}{2} = 185\,°K$

Brookhaven Science Associates
BROOKHAVEN NATIONAL LABORATORY

$$\frac{h_c L}{k_f} = 0.54\left[\frac{(24)^3(4.4\times10^{-3})^2}{(1.2\times10^{-4})^2}\,\frac{980(293-77)}{185}\left(\frac{1.04\,(1.2\times10^{-4})}{1.6\times10^{-4}}\right)\right]^{0.25}$$

$$h_c = \frac{12.5}{24}\,1.6\times10^{-4} = 8.3\times10^{-5}\ \frac{W}{CM^2\,{}^\circ K}$$

UNITS CHECK

$$\frac{h_c L}{k_f} = \frac{CM^3\,g^2\,CM\,{}^\circ K\,CM^2\,s^2\,J\,g\,CM\,{}^\circ K}{(CM^3)^2\,s^2\,{}^\circ K\,g^2\,g\,{}^\circ K\,CM\,s\,W}$$

$$h_c = \frac{W}{CM\,{}^\circ K\,CM} = \frac{W}{CM^2\,{}^\circ K}\ \checkmark$$

TOTAL HEAT LOSS

$q = hA\,(\Delta T)$ FOR A, USE $10{,}000\ CM^2$

$$q = 8.3\times10^{-5}\ \frac{W}{CM^2\,{}^\circ K}\times 10000\ CM^2\times(293-77) = 180\ \text{WATTS}$$

* DUE TO THE LARGE AMOUNT OF STORED HEAT, ASSUME NO CHANGE IN WARM END TEMPERATURE

5. CALCULATE VOLUMETRIC FLOW RATE USING HEAT OF FUSION OF 0.72 KJ/MOLE AND HEAT OF VAPORIZATION OF 5.57 KJ/MOLE

180 WATTS + 50 WATTS BACKGROUND

$$Q = 230\ \frac{J}{sec}\ \frac{22.4\ STDL}{Mole}\ \frac{Mole}{(5.57+.72)\,KJ}\ \frac{KJ}{1000J}\ \frac{1000\,CM^3}{l}\ \frac{M^3}{100^3\,CM^3}$$

$= 8.2\times10^{-4}\ M^3/sec$

$$8.2\times10^{-4}\ \frac{M^3}{sec}\ \frac{60\,sec}{MIN}\ \frac{IN^3}{2.54^3\,CM^3}\ \frac{FT^3}{12^3\,IN^3}\ \frac{100^3\,CM^3}{M^3}$$

$= 1.7$ CFM

Brookhaven Science Associates
BROOKHAVEN NATIONAL LABORATORY

6. CALCULATE VOLUMETRIC FLOW FOR DISCHARGE VENT PIPE AND BURST DISK.

FOR COMPRESSIBLE UNCHOKED (SUBSONIC) FLOW (CRANE)

$$q'_m = 678\, Y d^2 \sqrt{\frac{\Delta P\, P_1'}{k T_1 S_g}}$$

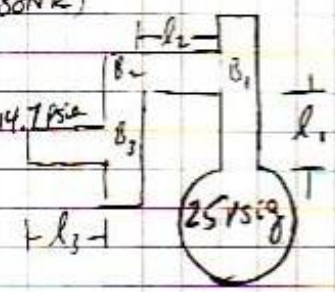

AT A MAX UPSTREAM P of 25 psig

$P_1' = 25 + 14.7 = 39.7$ $\qquad l_{TOTAL} = 1.5$ ft

$\Delta P = 25$ $\qquad T = 460 + 70 = 530$

$d = 1.37''$ $\quad d^2 = 1.88$

$D = 0.1142$ FT

$f = 0.022$ (TURBULENT)

$$k = f \frac{L}{D} = \frac{0.022 \times 1.5}{0.1142} = 0.289$$

$k = 1$ FOR PIPE EXIT

$k = 55 f_T$ FOR 90° BEND $\quad f_T = 0.021$

$k = 1.16 \times 3$ BENDS $= 3.5$

$k_{TOTAL} = 0.3 + 1 + 3.5 = 4.8$

$$\frac{\Delta P}{P_1'} = \frac{25}{39.7} = 0.63 \quad , Y = 0.64 \quad T = 530\ °R$$

$$q'_m = 678 (0.64)(1.88) \sqrt{\frac{25 \times 39.7}{4.8 \times 530 \times 1}}$$

$= 510$ CFM

@ 6 psi $\quad Y = 0.77$, $q_m = 217$ CFM

Brookhaven Science Associates
BROOKHAVEN NATIONAL LABORATORY

REFERENCES

1) K.M. WELCH, CAPTURE PUMPING TECHNOLOGY, 1991

2) F.M. WHITE, HEAT TRANSFER, 1984

3) McINTYRE (BNL), CALCULATION FOR STRING VOLUME COMPONENT WEIGHTS AND SURFACE AREA

4) McADAMS, HEAT TRANSMISSION, CHEMICAL ENGINEERING SERIES, 1954

5) CRANE, FLOW OF FLUIDS THROUGH VALVES, FITTINGS AND PIPE, TECH PAPER 410, 1988

Brookhaven Science Associates

BROOKHAVEN NATIONAL LABORATORY

JS-0-0052-000

"Proprietary Data is included in the information disclosed herein and is the sole property of BS&B SAFETY SYSTEMS, L.L.C. This information is submitted in confidence and neither this document nor the information disclosed herein shall be reproduced or transferred to other documents or used or disclosed to others for manufacturing or for any other purpose except as specifically authorized in writing by BS&B SAFETY SYSTEMS, L.L.C.

ITEM	O/S	PART NO.	QTY.	DESCRIPTION
1	B	JS-2-0038-088	1	INLET (304 SS)
2	B	JS-4-0039-088	1	OUTLET (304 SS)
3	—	KO-0-1139-088	1	CF FLANGE HALF NIPPLE 2 3/4" O.D.
				NOR-CAL MODEL #IN-150
4	—	———	—	RUPTURE DISK, 1.5" LPS (316 SS)
				B.P.: 6 PSI @ 72° F
				MFG. RANGE: 5 TO 7 PSI @ 72° F

"ORIGINAL"

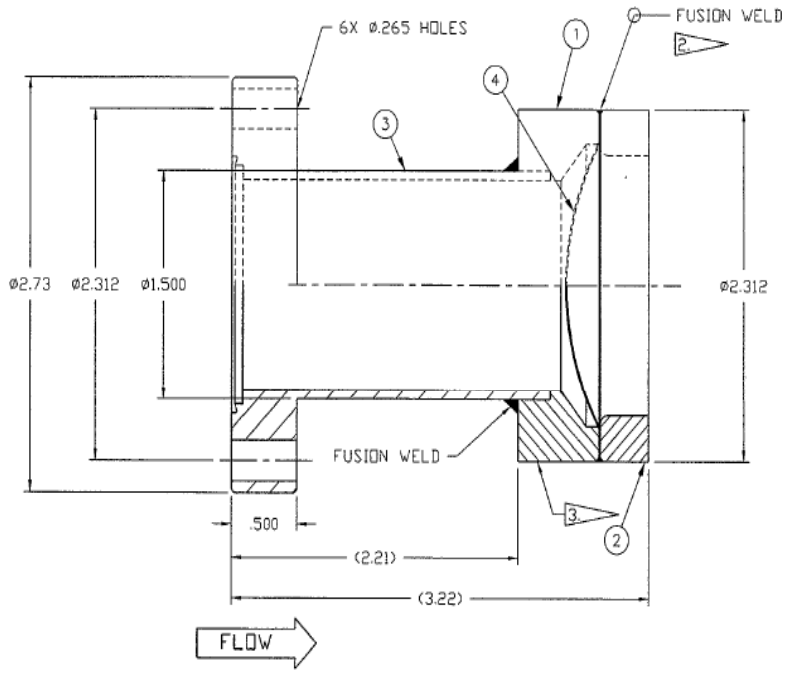

NOTES:

1.____ AT LEAST 6% OF THE LOT SHALL BE BURST TESTED (TWO BURST TESTS MINIMUM). THIS NUMBER MAY INCLUDE FINDING BREAKS AS WELL AS FINAL BURST TEST SAMPLES.

2. FUSION WELD IAW MIL-2-8611A.

3. ELECTRO-ETCH THE FOLLOWING:
FLOW →
X.X PSI @ 72° F
LOT # "XXXXXXXX-X"
"BS&B" & PART # "XX-X-XXXX-XXX"

4.____ HELIUM LEAK TEST PER Q.C. 527.

5.____ PARTS SHALL BE SENT TO NTS, QUALITY CONTROL CLEANING OR EQUIVALENT FOR CLEANING. IN AN AREA EQUAL TO A CLASS 100 CLEANROOM THE ASSEMBLY SHALL BE CLEANED TO REMOVE ALL SOLVENTS, PARTICULATE MATTER AND FINGERPRINTS. BECAUSE THE RUPTURE DISK IS FRAGILE ULTRASONIC CLEANING SHALL NOT BE USED. THE RUPTURE DISK SHALL NOT BE SUBJECTED TO FORCED OR COMPRESSED AIR AS PRESSURIZED AIR COULD DAMAGE THE DISK.

6.____ AFTER CLEANING THE ASSEMBLY MUST PASS A FINAL HELIUM LEAK TEST OF 1×10^{-7} CC/SEC. NO VACUUM GREASE OR SEALANT SHALL BE USED. AFTER THE PART IS CLEAN AND DRY A PARTICLE COUNT SHALL BE MADE TO DETERMINE THE NUMBER OF PARTICLES PER CUBIC FOOT LARGER THAN 0.5 MICRONS REMAINING. WITH THE PART SUSPENDED WITH THE FLANGE DOWN, THE COUNT SHALL BE TAKEN AT THE FLANGE OPENING AFTER THE ASSEMBLY IS TAPPED WITH A PLASTIC HAMMER TO DISLODGE PARTICULATE. THE RESULTING COUNT SHALL BE RECORDED AND INCLUDED ON THE TAG WITH EACH PART.

FINISH 125 OR BETTER ALL OVER UNLESS NOTED OTHERWISE
BREAK ALL SHARP CORNERS UNLESS NOTED

7.____ AFTER THE FINAL LEAK TEST THE FLANGE END SHALL BE COVERED WITH A CLEAN PLASTIC COVER. THE ASSEMBLY SHALL BE SEALED IN A CLEAN POLYETHYLENE BAG PURGED WITH DRY FILTERED NITROGEN. THAT BAG SHALL THEN BE SEALED IN ANOTHER CLEAN POLYETHYLENE BAG.

8.____ A LABEL CONTAINING THE FOLLOWING INFORMATION SHALL BE SEALED IN BETWEEN THE TWO BAGS:

JS-0-0052-000
MONTH/YEAR
BS&B LOT NUMBER
PARTICLE COUNT

REV.	ECN NO.	BY	CHK'D.	DATE

TITLE: ASSY., 1-1/2" LPS WELDED UNIT

B

TOLERANCE: DECIMALS
.XXX: ±.010
.XX: ±.03
ANGLES: ±0°30'

SCALE: 4/3

RELEASE No.: A7-2539

BS&B SAFETY SYSTEMS

DRAWN BY: CAD 10/01/07
CHECKED BY: P Patrick 10/01/07
APPROVED BY: 10/16/07

JS-0-0052-000

BROOKHAVEN NATIONAL LABORATORY

- BS&B leak tests 10% with a minimum of two per production run.
- Minimum net flow area for the device is 1.496 sq in. (area of 1.5” tube).
- Over 50 units in service with no reported failures.

BURST TEST CERTIFICATE
& CERTIFICATE OF CONFORMANCE

BS&B SAFETY SYSTEMS, L.L.C.

DATE: 01/16/2008

CUSTOMER: BROOKHAVEN NATIONAL LABORATORY
ATTN: ACCT'S PAYABLE
PO BOX 5000
UPTON, NY
USA - 11973

QTY. OF UNITS SHIPPED: 10
QTY. OF UNITS TESTED: 2

P.O. NUMBER: BNL-0000125966
BS & B LOT : A7070727-1
SIZE: 1.5"
TYPE: WELDED LPS
DISK MATERIAL: 316

We Certify that the items described in this document have been manufactured, inspected and tested in accordance with the standards applicable to our industry. The Original test data is on file and is available for your examination.

BURST TEST RESULTS

NUMERICAL VALUE	PRESSURE UNIT	@TEMPERATURE
6, 6	psig	72 °F

RATED RUPTURE

NUMERICAL VALUE	PRESSURE UNIT	@TEMPERATURE
6	psig	72 °F

OTHER DETAILS:

Tab Marking: N/A

QC Inspector: J.B.BLOCKER

Attachments: N/A

A7070727-1

BS&B Safety Systems, LLC
QA/QC DEPARTMENT

BS&B Safety Systems, L.L.C. • 7455 E. 46TH Street • P.O. Box 470590 • Tulsa, OK 74147-0590
Phone 918/622-5950 • Fax 918/665-3904
Email sales@bsbsystems.com • Website www.bsbsystems.com

Obtaining ASME Certification

- Required tolerance for ASME UD certification is ±2 psi.
- LPS design disk has a tolerance of 15% or for 6 psi < 1psi. This allows the LPS design to meet ASME certification.
- For certification:
  - Test device for a Kr value and file per the drawing configuration.
  - Presentation of the device to the National Board.
  - National Board to schedule inspection
    - Inspector to verify testing and produce documentation.
      - Witness welding, burst test and flow test.
  - Process could take 9 months or more.
  - Cost ~8K plus sacrificial assemblies (up to 20!)

Building 120
P.O. Box 5000
Upton, NY 11973-5000
Phone 631 344-7468
Fax 631 344-7497
gaffney@bnl.gov

managed by Brookhaven Science Associates
for the U.S. Department of Energy

Memo

Date: June 6, 2008

To: G. McIntyre

From: Michael Gaffney

Subject: Pressure Test for ERL 5°K Cooling Circuit

Reference: (a) *ASME B31.3-2002, "Process Piping,"*

Attachments: (1) 5K Circuit Weld Schematic 053008 (String thru Inner Magnetic Shield As Build Drawing)
(2) Leak Test Documentation Form (SR: 0912-ERL-0001)

To support the Energy Recovery Linear Accelerator (ERL) program, a pressure test was successfully performed on the stainless steel tubing for the helium 5°K cooling circuit of the Linear Accelerator (LINAC) on 30 May, 2008. The test was performed to support the fabrication process of the 5-Cell cyromodule, allowing for the visual inspection under pressure as required by reference (a), prior to the installing the cryogenic insulation and insertion into the vacuum jacket.

Helium gas was used to pressurized the four (4) branches as shown in Attachment (1) simultaneously. Each branch outlet was capped. Prior to the pressure test, a leak test was performed at operating pressures and no helium gas leak was detected. Test pressure was held for 10 minutes and then reduced to design pressure of 60 psig. All welds were spayed with a leak detection solution and visually check for leaks. No leaks were detected.

Attachment (2) documents the leak check and will need to be combined with additional leak checks performed as the unit is built-up. Attachment (1) needs to be included in the department's drawing system for configuration control.

5K Circuit Weld Schematic 053008.jpg

Attachment 1

Leak Test Documentation

Attachment 2

If you have any questions, I may be reached at extension 7468.

cc:
S Kane E. Lessard J. Tuozzolo S. Seberg L. Greves
\

mg/SE88SR08

Leak Test Documentation Form

SR: 0912-ERL-0001	Project Title/Number: **ERL 5-Cell 5°K Circuit**
Drawing/Sketches: **010601176 (5K Circuit Weld Schematic 053008)**	
Description of Components/System: 4 Branches: ¼" to ½" Stainless Steel Tubing (0.049" wall)	
Type of Test; Code or Procedure Reference: B31.3 Process Piping	
Other	

System Preparation (Insert "√" or "NA")

√	Fabrication is complete	N/A	Vent for air at high point
N/A	Flushed/cleaned	√	Vent for quickly relieving pressure
√	Openings sealed	√	System and test fluid at room temperature
√	Components not rated for test pressure and/or not subject to test are isolated	√	Eliminate hazards to personnel near test

Test Gauge Range (1.5 - 4 times test pressure):

Serial No.: IN06692 (0-100 psig) Calibration Due Date: 05/30/2009

Pressure Relief Device Set Point, 1⅓ times test pressure.
(Use if subject to significant thermal expansion during test.) (Insert NA or Pressure Setting.)
NA

Design or Maximum Allowable Working Pressure (MAWP): **60 psig**

Specified Test Pressure: **66 psig**

Note: Code required test pressures are based on the MAWP, which is usually the same as the design pressure.

Factor x (MAWP)

Vessels
- Hydrostatic 1.3
- Pneumatic 1.1

Piping
- Hydrostatic 1.5
- Pneumatic 1.1

Test Fluid	Actual Test Pressure (10 min. minimum hold time)
Helium	67-psig

Test Results (Accept/Reject - Leaks) Method Used (Visual, Soap Bubble, Vacuum, etc.)
Accepted - No Leaks observed using Soap Bubble (Leck-Tek). Initial vacuum leak chect to MDL 4×10^{-4} atm-cc/sec

Test Accepted

Scott Seberg (21485) 5/30/08
Department Representative (Life Number) Date

Michael Gaffney (22039) 5/30/08
Authorized Inspector (Life Number) Date

THIS SCHEMATIC REPRESENTS THE AS-BUILT, FIELD RUN 5K LINES ATTACHED TO THE 5-CELL STRING ASSEMBLY, BNL DRAWING NUMBER - 010601176.

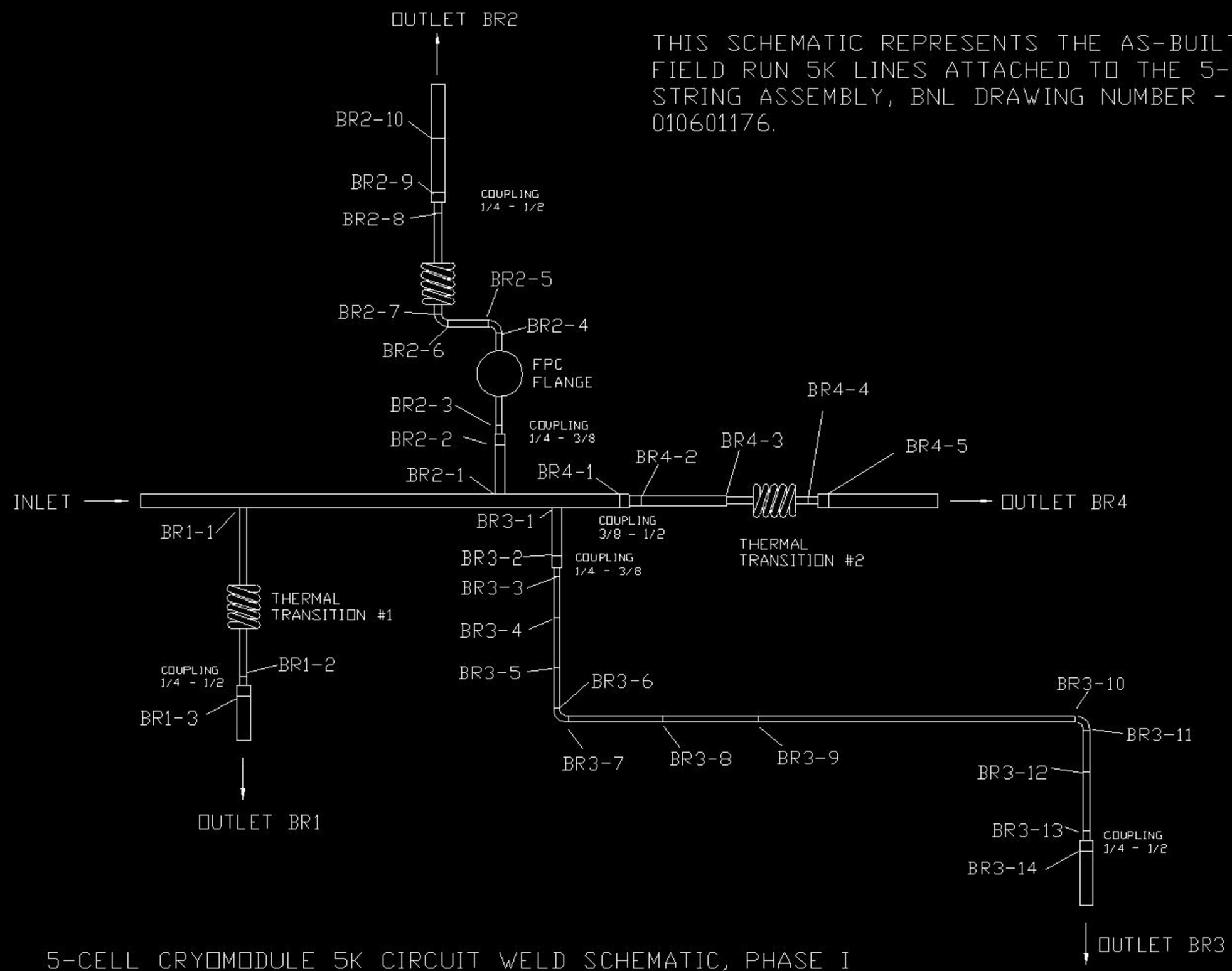

5-CELL CRYOMODULE 5K CIRCUIT WELD SCHEMATIC, PHASE I
FROM STRING THRU INNER MAGNETIC SHIELD, ASSOCIATED DWG-BNL# 010601176

05/30/08

Building 120
P.O. Box 5000
Upton, NY 11973-5000
Phone 631 344-7468
Fax 631 344-7497
gaffney@bnl.gov

managed by Brookhaven Science Associates
for the U.S. Department of Energy

Memo

Date: February 26, 2009

To: G. McIntyre

From: Michael Gaffney

Subject: Pressure Test for ERL Installation

Reference:
- *(a)* BNL Drawing RD010604017, *"ERL Cryogenics Cyromodule Piping P & ID Phase FY06 (Rev B)"*
- (b) Memorandum from M. Gaffney to G. McIntyre, *"Pressure Test for ERL 5 Cell Cavity 5°K Cooling Circuit,"* dated 08/26/08
- *(c)* ASME B31.3-2002, *"Process Piping,"*
- *(d)* *SBMS Subject Area, "Piping Systems, Identification of"*

Attachments:
- (1) Leak Test Documentation Form LHe (SR: 0912-ERL-0003)
- (2) Leak Test Documentation Form GHe (SR: 0912-ERL-0004)
- (3) Leak Test Documentation Form LN2 (SR: 0912-ERL-0005)
- (4) Leak Test Documentation Form Ballast (SR: 0912-ERL-0006)
- (5) Leak Test Documentation Form Weld Repair (SR: 0912-ERL-0007)

Pressure tests were performed on the Energy Recovery Linear (ERL) Accelerator system installed in Building 912. As documented in reference (a), process piping includes: the 4.2°K liquid helium supply line (LHe), the nitrogen 80°K thermal shield circuit (LN2) and the supply and exhaust of the connection to the helium 5°K cooling circuit (GHe) of the 5-Cell Cavity, whose internal pressure test was documented by reference (b). The design pressure for these systems is 60-psig (test pressure 66-psig). The Ballast tank and relief line were also tested. The tank and line were tested under vacuum and the design system pressure is 6-psig (test pressure 8-psig). Relief valves were capped and the burst disk was removed and a blank installed.

Pressure tests, as required by reference (c) were successfully performed on 17 & 18 February, 2009. Compressed helium gas was used for testing. No leaks were detected and the tests were documented on attachments (1) to (4). After the test, a weld repair was performed on the GHe piping penetrations to the 5-Cell Cavity Vacuum Vessel. A pressure test was performed on 25 February 2009, to verify that the repairs did not degrade the piping and documented on attachment (5).

mg/SE88SR09

Attachment 1	Attachment 2	Attachment 3	Attachment 4	Attachment 5
Leak Test Documentation Form	Leak Test Documentation Form	Leak Test Documentation Form	Leak Test Documentation Form	Leak Test Documentation Form
LHe	GHe	LN2	Ballast	Weld Repair

Also note the following:

- The nitrogen shield lines need to be labeled per reference (d). Since these lines are not vacuum jacketed, the method of labeling needs to be effective (such as hanging signs) when frost builds up.
- The nitrogen system valves need labels.
- Since the system has significant amount on non-vacuum jacketed piping, staff working in the area needs to wear appropriate personal protective equipment. CGA P-12, "Safe Handling of Cryogenic Liquids" requires safety glasses with side shield be worn during transfer of cryogenic liquid with enclosed piping systems and is applicable in this case. Insulated gloves are required when handling piping that is at cryogenic temperatures.
- The 5°K cooling circuit piping is not adequately supported. The Swaglock® fittings are susceptible to vibration.

If you have any questions, I may be reached at extension 7468.

cc:
S Kane E. Lessard J. Tuozzolo Y. Than S. Seberg W. Dejong M. Sardzinski
L. Greves (Safety Files) C. Conrad (LESHC Files)

Leak Test Documentation Form

SR: 0912-ERL-0006	Project Title/Number: **ERL Installation**

Drawing/Sketches: **RD010604017**

Description of Components/System: ERL Ballast Tank and Revief Line

Type of Test; Code or Procedure Reference: ASME B&PV Code Section VIII (Div 1) & B31.3 Process Piping

Other - Test Boundary H10918A/H10919A to H10922A/H10896A BD2519H removed and blanked & H10940R capped

System Preparation (Insert "√" or "NA")

√	Fabrication is complete	N/A	Vent for air at high point
√	Flushed/cleaned	N/A	Vent for quickly relieving pressure
√	Openings sealed	√	System and test fluid at room temperature
√	Components not rated for test pressure and/or not subject to test are isolated	√	Eliminate hazards to personnel near test

Test Gauge Range (1.5 - 4 times test pressure):

Serial No.: ASHCROFT (30" Vacuum-30 psig) Calibration Due Date: 12/9/09

Pressure Relief Device Set Point, 1⅓ times test pressure.
(Use if subject to significant thermal expansion during test.) (Insert NA or Pressure Setting.)
10 psig

Design or Maximum Allowable Working Pressure (MAWP): **6 psig**

Specified Test Pressure: **8 psig**

Note: Code required test pressures are based on the MAWP, which is usually the same as the design pressure.

Factor x (MAWP)

Vessels
- Hydrostatic 1.3
- Pneumatic 1.1

Piping
- Hydrostatic 1.5
- Pneumatic 1.1

Test Fluid	Actual Test Pressure (10 min. minimum hold time)
Helium	8 psig

Test Results (Accept/Reject - Leaks) Method Used (Visual, Soap Bubble, Vacuum, etc.)
Accept - Visual & Vacuum

Test Accepted

M. Sardzinski (14473) 2/17/2009
Department Representative (Life Number) Date

M. Gaffney (22039) 02/17/09
Authorized Inspector (Life Number) Date

Leak Test Documentation Form

SR: 0912-ERL-0007	Project Title/Number: **ERL Installation**

Drawing/Sketches: **RD010604017**

Description of Components/System: ERL Gaseous Helium Supply and Return Piping: Vacuum Vessel/Piping Interface (weld repairs performed sealing vessel to piping)

Type of Test; Code or Procedure Reference: ASME B31.3 Process Piping

Other - Test Boundary - H10926M to H10947M (including 5-Cell Cavity)

System Preparation (Insert "√" or "NA")

√	Fabrication is complete	N/A	Vent for air at high point
√	Flushed/cleaned	N/A	Vent for quickly relieving pressure
√	Openings sealed	√	System and test fluid at room temperature
√	Components not rated for test pressure and/or not subject to test are isolated	√	Eliminate hazards to personnel near test

Test Gauge Range (1.5 - 4 times test pressure):

Serial No.: WIKA (0-160 psig) Calibration Due Date: 11/13/09

Pressure Relief Device Set Point, 1⅓ times test pressure.
(Use if subject to significant thermal expansion during test.) (Insert NA or Pressure Setting.)
190 psig

Design or Maximum Allowable Working Pressure (MAWP): **60 psig**

Specified Test Pressure: **66 psig**

Note: Code required test pressures are based on the MAWP, which is usually the same as the design pressure.

Factor x (MAWP)

Vessels
- Hydrostatic 1.3
- Pneumatic 1.1

Piping
- Hydrostatic 1.5
- Pneumatic 1.1

Test Fluid	Actual Test Pressure (10 min. minimum hold time)
Helium	68 psig

Test Results (Accept/Reject - Leaks) Method Used (Visual, Soap Bubble, Vacuum, etc.)
Accept - Visual/Soap Bubble

Test Accepted

M. Sardzinski (14473) 2/25/2009
Department Representative (Life Number) Date

M. Gaffney (22039) 02/25/09
Authorized Inspector (Life Number) Date

Leak Test Documentation Form

SR: 0912-ERL-0004	Project Title/Number: **ERL Installation**
Drawing/Sketches: **RD010604017**	
Description of Components/System: ERL Gaseous Helium Supply and Return Piping	
Type of Test; Code or Procedure Reference: ASME B31.3 Process Piping	
Other - Test Boundary - H10926M to H10947M (including 5-Cell Cavity)	

System Preparation (Insert "√" or "NA")

√	Fabrication is complete	N/A	Vent for air at high point
√	Flushed/cleaned	N/A	Vent for quickly relieving pressure
√	Openings sealed	√	System and test fluid at room temperature
√	Components not rated for test pressure and/or not subject to test are isolated	√	Eliminate hazards to personnel near test

Test Gauge Range (1.5 - 4 times test pressure):

Serial No.: WIKA (0-160 psig) Calibration Due Date: 11/13/09

Pressure Relief Device Set Point, 1⅓ times test pressure.
(Use if subject to significant thermal expansion during test.) (Insert NA or Pressure Setting.)
190 psig

Design or Maximum Allowable Working Pressure (MAWP): **60 psig**

Specified Test Pressure: **66 psig**

Note: Code required test pressures are based on the MAWP, which is usually the same as the design pressure.

Factor x (MAWP)

Vessels
- Hydrostatic 1.3
- Pneumatic 1.1

Piping
- Hydrostatic 1.5
- Pneumatic 1.1

Test Fluid	Actual Test Pressure (10 min. minimum hold time)
Helium	66 psig

Test Results (Accept/Reject - Leaks) Method Used (Visual, Soap Bubble, Vacuum, etc.)
Accept - Visual/Soap Bubble/Vacuum (5 Cell Cavity lines)

Test Accepted

M. Sardzinski (14473) 2/17/2009
Department Representative (Life Number) Date

M. Gaffney (22039) 02/17/09
Authorized Inspector (Life Number) Date

Leak Test Documentation Form

SR: 0912-ERL-0003	Project Title/Number: **ERL Installation**
Drawing/Sketches: **RD010604017**	
Description of Components/System: ERL Liquid Helium Supply Pipe	
Type of Test; Code or Procedure Reference: ASME B31.3 Process Piping	
Other - Test Boundary - H10912M to H10956A/H10919A/H10918A	

System Preparation (Insert "√" or "NA")

√	Fabrication is complete	N/A	Vent for air at high point
√	Flushed/cleaned	N/A	Vent for quickly relieving pressure
√	Openings sealed	√	System and test fluid at room temperature
√	Components not rated for test pressure and/or not subject to test are isolated	√	Eliminate hazards to personnel near test

Test Gauge Range (1.5 - 4 times test pressure):

Serial No.: WIKA (0-160 psig) Calibration Due Date: 11/13/09

Pressure Relief Device Set Point, 1⅓ times test pressure.
(Use if subject to significant thermal expansion during test.) (Insert NA or Pressure Setting.)
190 psig

Design or Maximum Allowable Working Pressure (MAWP): **60 psig**

Specified Test Pressure: **66 psig**

Note: Code required test pressures are based on the MAWP, which is usually the same as the design pressure.

Factor x (MAWP)

Vessels
- Hydrostatic 1.3
- Pneumatic 1.1

Piping
- Hydrostatic 1.5
- Pneumatic 1.1

Test Fluid	Actual Test Pressure (10 min. minimum hold time)
Helium	67 psig

Test Results (Accept/Reject - Leaks) Method Used (Visual, Soap Bubble, Vacuum, etc.)
Accept - Visual /Vacuum

Test Accepted

M. Sardzinski (14473) 2/18/2009
Department Representative (Life Number) Date

M. Gaffney (22039) 02/18/09
Authorized Inspector (Life Number) Date

Leak Test Documentation Form

SR: 0912-ERL-0005	Project Title/Number: **ERL Installation**
Drawing/Sketches: **RD010604017**	
Description of Components/System: ERL Liquid Nitrogen Supply and Return Piping	
Type of Test; Code or Procedure Reference: ASME B31.3 Process Piping	
Other	

System Preparation (Insert "√" or "NA")

√	Fabrication is complete	N/A	Vent for air at high point
√	Flushed/cleaned	N/A	Vent for quickly relieving pressure
√	Openings sealed	√	System and test fluid at room temperature
√	Components not rated for test pressure and/or not subject to test are isolated	√	Eliminate hazards to personnel near test

Test Gauge Range (1.5 - 4 times test pressure):

Serial No.: WIKA (0-160 psig) Calibration Due Date: 11/13/09

Pressure Relief Device Set Point, 1⅓ times test pressure.
(Use if subject to significant thermal expansion during test.) (Insert NA or Pressure Setting.)
190 psig

Design or Maximum Allowable Working Pressure (MAWP): **60 psig**

Specified Test Pressure: **66 psig**

Note: Code required test pressures are based on the MAWP, which is usually the same as the design pressure.

Factor x (MAWP)

Vessels
- Hydrostatic 1.3
- Pneumatic 1.1

Piping
- Hydrostatic 1.5
- Pneumatic 1.1

Test Fluid	Actual Test Pressure (10 min. minimum hold time)
Helium	66 psig

Test Results (Accept/Reject - Leaks) Method Used (Visual, Soap Bubble, Vacuum, etc.)
Accept - Visual/Drop

Test Accepted

M. Sardzinski (14473) 2/17/2009
Department Representative (Life Number) Date

M. Gaffney (22039) 02/17/09
Authorized Inspector (Life Number) Date

C-A D Engineering Design Support Documentation Cover Page

Title: ***WPS NB 1-08 Revision A***	Author: Gary McIntyre
Subject: WELDING PROCEDURE SPECIFICATION (WPS) for Electron Beam Welding of Niobium to Niobium and Niobium to Niobium55-Titanium	
C-A Department Group: ERL Mechanical	Checked: Alfred Farland Approval:
Documentation Type: ☐ Written Technical Paper ☐ Design Calculations ☐ Design Review Presentation ☐ Design Certification X Specification ☐ Procurement Documentation ☐ Safety/ALARA Review Presentation X Other: WELDING PROCEDURE SPECIFICATION (WPS)	Equipment Type: ☐ Magnets and Power Supplies ☐ Vacuum Systems X RF Systems ☐ Cryogenic Systems ☐ Experimental Equipment ☐ Beam Instrumentation ☐ Water Systems ☐ Buildings, Structures, and Shielding X Other: SRF Cavity
Equipment Location: ☐ Tandem Van DeGraff ☐ Linac ☐ Booster ☐ AGS ☐ RHIC X 912 Experimental Area ☐ 919 Experimental Area ☐ RHIC Experimental Areas ☐ SNS ☐ Buildings, Structures, and Shielding X Other Energy Recovery Linac BLG 912	Associated information for cataloging (if available fill in the number): ☐ C-A D Design Room Job No. ☐ C-A D Design Room Drawing No. ☐ C-A D Specification No. ☐ C-A D Experiment No. X Other AES Drawing # 1242G00001, e-GUNF CAVITY ASSEMBLY

BROOKHAVEN NATIONAL LABORATORY
MAINTENANCE AND FABRICATION SERVICES DIVISION

WELDING PROCEDURE SPECIFICATION (WPS)
(C-AD Engineering Archive # 1242G00001 QAR-01)

WPS Number: NB 1-08 **Revision**: A **Date: 02/23/09**

Written By: G. McIntyre GTM **Approved By:** A. Farland
Material: Niobuim/Nb55Ti Welding **Process:** EBW **Type:** Machine
Support PQRs:

Base Metals (QW-403)

P-Number (N/A): Nb - RRR **To** **P-Number (N/A):** Nb - RRR **and** Nb55Ti
Minimum Pipe Dia. **Grooves:** 3/4 in. dia **Fillets:** ALL

Joints (QW-402)

Joint Design: Interlocking Butt, Angled Butt and Butt Welds (all full penetration), Repairs and Buildup.
Fit-up gap: < .010 inches
Base Metal: RRR to RRR .001 - .410 in. **Max. Deposited Metal:** N/A
RRR to Nb55Ti .001 - .410 in.
Details: See Attachment for typical joints.

Backing or Retainer: When permitted by Engineering Instructions.
Type: RRR niobium when used.

Filler Metals (QW-404)

Base Metal	Spec. No. (SFA)	AWS No. (class)	F-No	A-No	Table
Nb-RRR	See Note 1				
Nb55Ti	See Note 1				

Size of Filler: ---------- Autogenous fusion weld ----------
Fillet: ----------ALL----------
Consumable Insert: ----------N/A----------

Positions (QW-405)

Welding Positions: All **Progression:** Uphill or Forehand

Preheat (QW-406)

Preheat Temperature: Minimum 50°F
Interpass Temperature: N/A

Postweld Heat Treatment
None

WPS Number: NB 1-08 Rev. A
Written By: G. McIntyre **Approved:** Al Farland

Electrical Characteristics (QW-409)

Beam Current: 3 – 60 mA (10^{-3} Amps) **Volts:** 100 to 140 kV
Slope Up: 5° to 90° **Filament Current**: 24 Amps
Overlap: 0 to 1.5 inches **Oscillations:** None
Frequency: 1 – 1000 Hz **Amplitude**: (X) .000 to .125 inches (Y) .000 to .125 inches

---

Technique (QW-410)

Travel Speed: 1 to 40 inches per minute **Fixture Angle:** 0° to 45°
Environment (Pressure of Vacuum): < 5 X10^{-5} Torr **Filament:** 1.4mm Tungsten Ribbon
Wash Pass: Cosmetic pass on underside minimum 20% of material thickness.
Gas: None
Penetration: Complete

1. Once the cleaning process has started Nitrile or Latex gloves must be worn whenever the parts are handled.
2. Parts shall be degreased in Micro-90 under ultrasonic agitation at 45°C for 15 minutes, rinsed with Ultra High Purity de-ionized water filtered to (0.05 microns) and blow dry with Ultra High Purity Nitrogen filtered to 0.05 microns. During and after the degreasing, rinsing, and drying process's the parts will not be supported on or near the electron beam weld joints.
3. BCP of niobium and Nb55Ti parts shall be carried out in a mixture of electronic grade acids consisting of HF (48% concentration), HNO_3 (65% concentration) and $H_3P_3O_4$ (85% concentration) mixed in a volume ratio of 1:1:2. During the etching operation the parts shall not exceed a temperature of 15°C.
4. After the chemical etching is complete (within 10 seconds) the parts are immersed in a rinsing bath of Ultra High Purity de-ionized water filtered to (0.05 microns) and then rinse in flowing (0.05 micron) filtered Ultra High Purity de-ionized water.
5. Parts are then placed on a laminar airflow bench class 1000 or better to air dry. During the etching and drying process's the parts will not be supported on or near the electron beam weld joints.
6. Components will be welded within 8 hours of buffered chemical polishing. If more than 8 hours has elapsed before welding an additional 3 microns will be removed.

WPS Number: Nb 1-08 Rev. A
Written By: G. McIntyre **Approved:** Al Farland

Weld Preparation Chart

See attached drawing

Pipe/Plate Size	Thickness (T)	Root Opening	Half Angle (D)
Plate	< 0.410"	< 0.010"	N/A

Supporting Documents

1. PQR Supported by this WPS

Notes

1. This procedure does not use filler material.
2. Weld samples performed on a PTR-636 electron beam welding, Precision Technologies, Inc. , Enfield, CT.

Revisions

None

WPS Number: Nb 1-08 Rev. A
Written By: G. McIntyre **Approved:** Al Farland

Weld Type Drawings (Representative of Welds performed under this WPS)

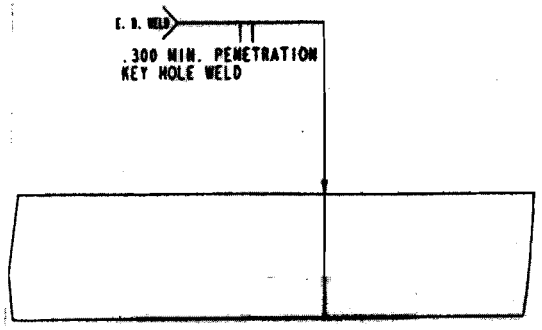

Simple Butt Weld

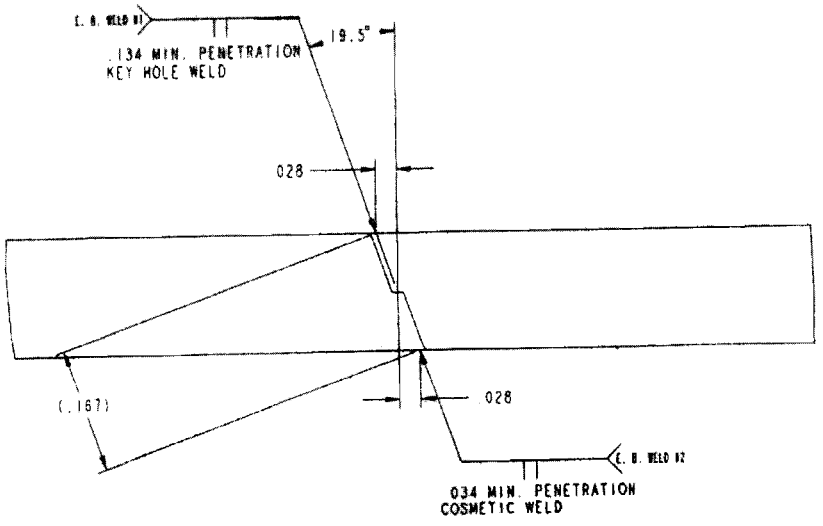

Angled Interlocking Butt Weld

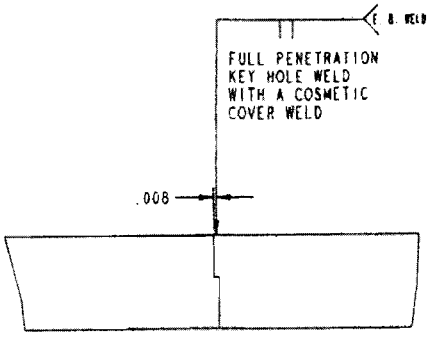

Interlocking Butt Weld

ERL ELECTRON GUN WELD PROCEDURE QUALIFICATION RECORDS

PO Line Item #	Test Type	Drawing	Number	Weld Type	Weld Thicknesses (in. / in.)	Weld Angle from Normal	Material Types	Procedure Qualification Record Number (AES -Seq. No.)	Number of Tests Required: Tensile	Min. Tensile Strength (KSI)	Min. Yield Strength (KSI)	Macropolishing	Macro Results	GBT - Root *	GBT-R Results	GBT- Face **	GBT-F Results	CVN	Min. CVN Energy (FT-LBS)
1 & 2	Tensile Test / Macropolishing	1242T00	101	Interlocking Butt	0.070 / 0.070	N/A	RRR / RRR	AES- EGUN-234	3	19.2	8.8	2	S						
1 & 2	Tensile Test / Macropolishing	1242T00	102	Angle Interlocking Butt	0.118 / 0.118	13°	RRR / RRR	AES- EGUN-236	3	23.3	9.2	2	S						
1 & 2	Tensile Test / Macropolishing	1242T00	103	Interlocking Butt	0.253 / 0.253	N/A	RRR / RRR	AES- EGUN-241	3	20.5	7.9	2	S						
1 & 2	Tensile Test / Macropolishing	1242T00	104	Angle Interlocking Butt	0.165 / 0.335	30°	RRR / RRR	AES- EGUN-256	3	18.3	9.2	2	S						
1 & 2	Tensile Test / Macropolishing	1242T00	106	Interlocking Butt	0.157 / 0.157	N/A	RRR / RRR	AES- EGUN-245	3	22.4	9.6	2	S						
1 & 2	Tensile Test / Macropolishing	1242T00	107	Angle Interlocking Butt	0.157 / 0.157	19.5°	RRR / RRR	AES- EGUN-242	3	20.2	9.7	2	S						
1 & 2	Tensile Test / Macropolishing	1242T00	108	Butt	0.330 / 0.330	N/A	RRR / NbTi	AES- EGUN-249	3	24.0	11.1	2	S						
1 & 2	Tensile Test / Macropolishing	1242T00	110	Butt	0.260 / 0.260	N/A	RRR / NbTi	AES- EGUN-247	3	23.8	12.0	2	S						
1 & 2	Tensile Test / Macropolishing	1242T00	111	Butt	0.375 / 0.313	N/A	NbTi / NbTi	AES- EGUN-254	3	62.0	56.5	2	S						
3 & 4	Guided Bend Test Root / Face	1242T00	117	Interlocking Butt	0.157 / 0.157	N/A	RRR / RRR	AES- EGUN-246						3	S	3	S		
3 & 4	Guided Bend Test Root / Face	1242T00	118	Angle Interlocking Butt	0.157 / 0.157	19.5°	RRR / RRR	AES- EGUN-243						3	S	3	S		
3 & 4	Guided Bend Test Root / Face	1242T00	120	Butt	0.157 / 0.157	N/A	NbTi / NbTi	AES- EGUN-252						3	S	3	S		
5	CV-notch Impact Test @77K	1242T00	121	Interlocking Butt	0.253 / 0.253	N/A	RRR / RRR	AES- EGUN-239										3	4
5	CV-notch Impact Test @77K	1242T00	122	Angle Interlocking Butt	0.165 / 0.335	30°	RRR / RRR	AES- EGUN-255										3	4
5	CV-notch Impact Test @77K	1242T00	123	Angle Interlocking Butt	0.157 / 0.157	19.5°	RRR / RRR	AES- EGUN-244										3	1
5	CV-notch Impact Test @77K	1242T00	124	Butt	0.330 / 0.330	N/A	RRR / NbTi	AES- EGUN-251										3	4
5	CV-notch Impact Test @77K	1242T00	125	Butt	0.375 / 0.313	N/A	NbTi / NbTi	AES- EGUN-253										3	40
3 & 4	Guided Bend Test Root / Face	1242T00	127	Interlocking Butt	0.070 / 0.070	N/A	RRR / RRR	AES- EGUN-235						3	S	3	S		
3 & 4	Guided Bend Test Root / Face	1242T00	128	Angle Interlocking Butt	0.118 / 0.118	13°	RRR / RRR	AES- EGUN-237						3	S	3	S		
3 & 4	Guided Bend Test Root / Face	1242T00	129	Angle Interlocking Butt	0.165 / 0.335	30°	RRR / RRR	AES- EGUN-257						3	S	3	S		
3 & 4	Guided Bend Test Root / Face	1242T00	130	Butt	0.330 / 0.330	N/A	RRR / NbTi	AES- EGUN-250						3	S	3	S		
3 & 4	Guided Bend Test Root / Face	1242T00	132	Butt	0.260 / 0.260	N/A	RRR / NbTi	AES- EGUN-248						3	S	3	S		
5	CV-notch Impact Test @77K	1242T00	133	Angle Interlocking Butt	0.118 / 0.118	13°	RRR / RRR	AES- EGUN-238										3	1
3 & 4	Guided Bend Test	1242T00	134	Interlocking Butt	0.253 / 0.253	N/A	RRR / RRR	AES- EGUN-240						3	S	3	S		
5	CV-notch Impact Test @77K	1242T00	126	No welding - material sample														3	2
6	CV-notch Impact Test @4K	1242T00	126	No welding - material sample														3	3
									27			18		27		27		24	

* - Face of weld is the wider end of the weld "V" when weld zone is viewed from side of sample.
** - Root of weld is the smaller end of the weld "V" (point) when weld zone is viewed from side of sample.

S - Satisfactory
U - Unsatisfactory

Electron Beam Welding Data Sheet

WO/ST No.: 001600	Seq. No.234
Operation No.: 6&7	Sheet 1 of 1

Customer: Brookhaven National Lab.		
Date: 2/6/2009	Charge Number:GC1292-001	
Program Number: O0345		
Part Name: Tension test specimen		
Part Number:1242T00101-5	Rev.N/A	Qty. 1
Serial Number: N/A		

Sketch:

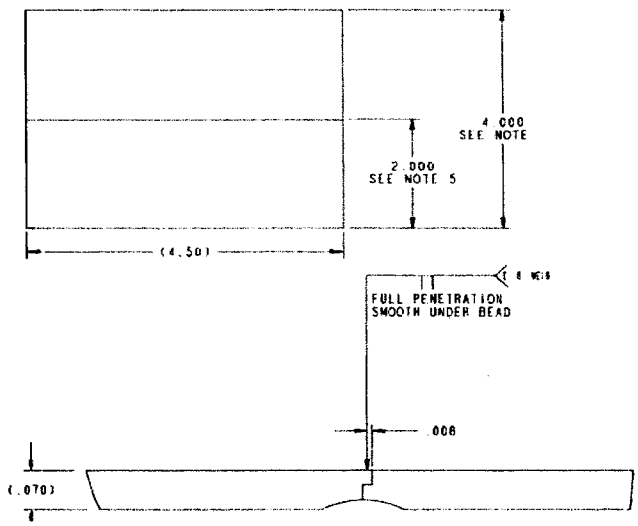

Vendor used for welding: Advanced Energy Systems, Inc.
Machine Type: Electron Beam
Machine Serial Number: 636
Gun Type: BK 1.4 mm fil. V-Style Ribbon
Operator: Ted Matos
Weld Description
Specification Number:WPS-N-1-08
Material 1: Niobium .070
Material 2: Niobium .070
Weld Type: liner full pen. smooth under bead
Joint Type: Interlocking
Joint Thickness: .070
Tooling
Fixture Type: test piece holder
Fixture Angle: 0 degree
Weld Cycle Data
Vacuum Level: 2.2 x 10 -5
Ramp Up: N/A
Over Lap: N/A
Fade Out: N/A
Cool down time in vacuum: 30 min.
Back fill time to 20 Torr: 22 min
Cool down time at 20 Torr: 15 min
Temperature at atmosphere: 92.0 degrees

Penetration Requirements:	%	Depth (Inches)	Length
Spot Tack Weld			N/A
Stitch Tack Weld			
Seal Weld			N/A
Weld	100	.070	N/A
Cosmetic Weld			N/A

Weld Type	Beam kV	Beam mA	Frequency Hz	Amplitude (X / Y)	Spot Size Inches	Welding Speed IN / MIN	Welding Speed SEC / REV	Defocus	Gun to work Distance
Tack Weld	100	7	1000	X=6.5 Y=6.5	X=.075 Y=.075	18	N/A	-4	11
Seal Weld	100	10	1000	X=6.5 Y=6.5	X=.075 Y=.075	18	N/A	-4	11 (550)
Weld	100	17	1000	X=6.5 Y=6.5	X= .075 Y=.075	18	N/A	-4	
Cosmetic Weld				X= Y=	X= Y=				

Comments: "No fit up gap, No filler material and No Pre-heat of parts required" visual inspection was good.

Certified Test Report

LABORATORY TESTING INC.
2331 Topaz Drive, Hatfield, PA 19440
Phone: 800-219-9095 • Fax: 800-219-9096

BNL001-09-05-15980-1

Accredited Nadcap™
Materials Testing Laboratory
Nondestructive Testing

SOLD TO
Brookhaven National Laboratory
Collider-Accelerator Dept.
Building 911A
Upton, NY 11973-5000

SHIP TO
Brookhaven National Laboratory
Collider-Accelerator Dept.
Building 911A
Upton, NY 11973-5000
ATTN: G. T. McIntyre

CUSTOMER P.O.	CERTIFICATION DATE	SHIP VIA
BNL-0000148742	6/18/2009	EMAIL & UPS

DESCRIPTION

Quantity:	1
Size:	4" x 4 1/2"
PO Line Item No.:	1 & 2
Drawing No.:	1242T00 101
Weld Type:	Interlocking Butt
Weld Thicknesses:	0.070 / 0.070
Weld Angle from Norm:	N/A
Material Types:	RRR / RRR
PQR No. (AES-Seq. No):	AES- EGUN-234
Material:	Niobium

TENSILE TEST:

APPLICABLE SPECIFICATIONS: **ASME BPVC, SECTION IX, 2007 EDITION, 2008a ADDENDA**

	Specimen #1	Specimen #2	Specimen #3
Size (Inches)	0.2515 x 0.0585	0.2510 x 0.0585	0.2510 x 0.0590
Area (Square Inches)	0.0147	0.0147	0.0148
Tensile Load (Pounds)	317.00	329.75	284.00
Tensile Strength (KSI)	21.5	22.5	19.2
Yield Load (.2%) (Pounds)	129.79	141.21	130.51
Yield Strength (.2%) (KSI)	8.8	9.6	8.8
Elongation (In 2") (%)	19	20	19
Failure Location	Ductile	Ductile	Ductile
Mode of Fracture	Weld Area	Weld Area	Weld Area

LABORATORY TESTING INC.
2331 Topaz Drive, Hatfield, PA 19440
Phone: 800-219-9095 ◆ Fax: 800-219-9096

Certified Test Report

BNL001-09-05-15980-1

Accredited Nadcap™
Materials Testing Laboratory
Nondestructive Testing

A Macro Examination was performed on (2) pieces of the submitted Test Specimens in accordance with Customer Instructions with the following results:

ACTUAL: The samples were sectioned, ground, and etched in accordance with LTI Procedure Numbers 90-MACRO-1, Rev. 2, Dated 11/2/06 and 90-MICRO-1, Rev. 6, Dated 6/18/01.

Representative photographs revealed that the general macrostructure of the materials exhibited no evidence of cracking, excessive amounts of inclusions or significant porosity as shown in Figures 1-2.

The services performed above were done in accordance with LTI's Quality System Program Manual Revision 18 dated 7/27/07 and ISO/IEC 17025. These results relate only to the items tested and this report shall not be reproduced, except in full, without the written approval of Laboratory Testing, Inc. L.T.I. is accredited by PRI to ISO17025 and by Nadcap for NDT and Materials Testing for the test methods and specific services as listed in the Scopes of Accreditation available at www.labtesting.com and www.eAuditNet.com. The results reported on this test report represent the actual attributes of the material tested and indicate full compliance with all applicable specification and contract requirements.

MERCURY CONTAMINATION: During the testing and inspection, the product did not come in direct contact with mercury or any of its compounds nor with any mercury containing devices employing a single boundary of containment.

NOTE: The recording of false, fictitious or fraudulent statements or entries on this document may be punishable as a felony under Federal Statutes.

Sherri L. Scheifele
QA Specialist

Sherri L Scheifele

By: _____
Authorized Signature

LABORATORY TESTING INC.
2331 Topaz Drive, Hatfield, PA 19440
Phone: 800-219-9095 • Fax: 800-219-9096

Certified Test Report

BNL001-09-05-15980-1

Accredited Nadcap™
Materials Testing Laboratory
Nondestructive Testing

PHOTOGRAPHIC SUBMITTAL

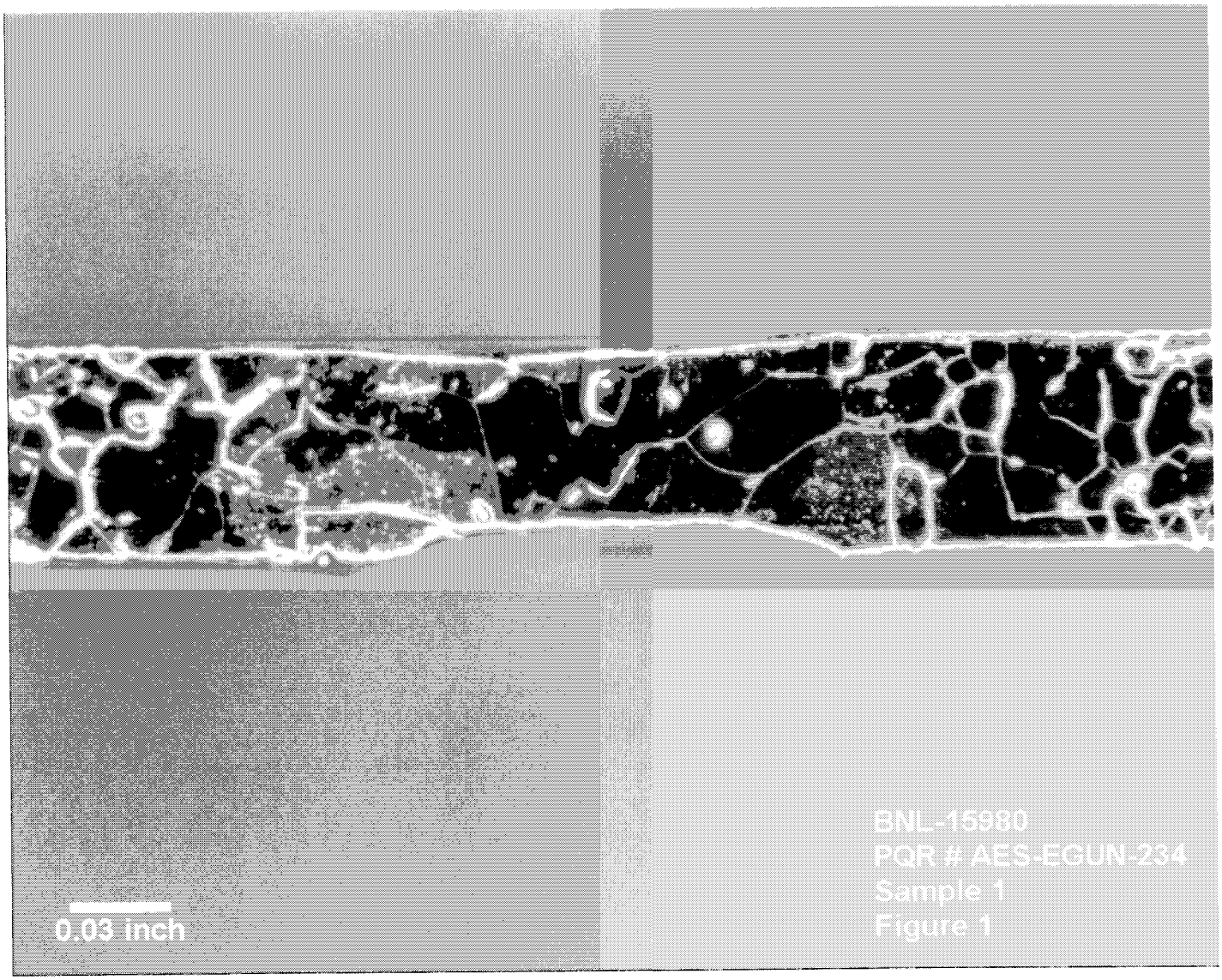

FIGURE 1

LABORATORY TESTING INC.
2331 Topaz Drive, Hatfield, PA 19440
Phone: 800-219-9095 • Fax: 800-219-9096

Certified Test Report

BNL001-09-05-15980-1

Accredited Nadcap™
Materials Testing Laboratory
Nondestructive Testing

PHOTOGRAPHIC SUBMITTAL

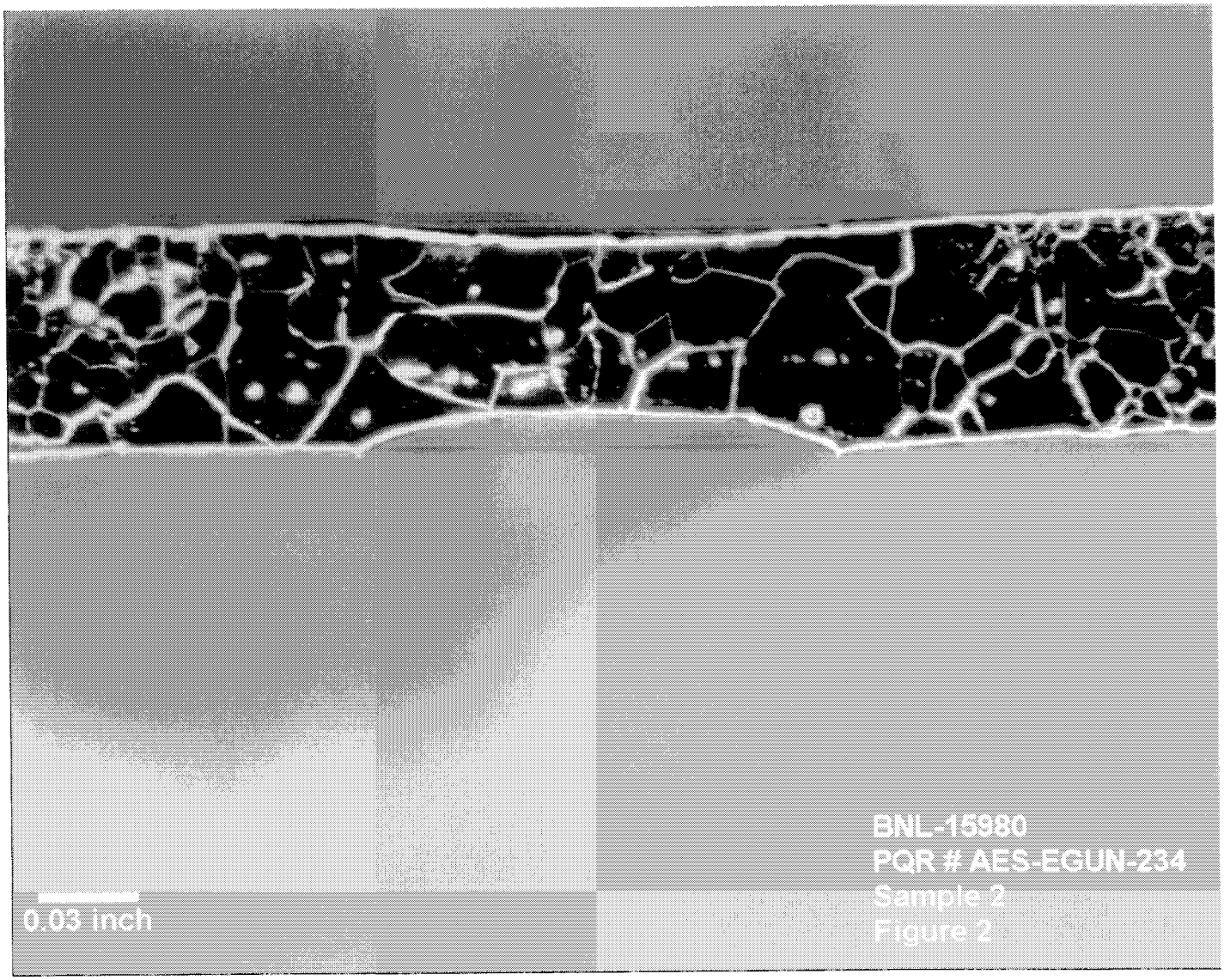

FIGURE 2

Electron Beam Welding Data Sheet

WO/ST No.: 001601	Seq. No. 236
Operation No.: 5 &6	Sheet 1 of 1

Customer: Brookhaven National Lab.	Vendor used for welding: Advanced Energy Systems, Inc.
Date: 2/10/2009 | Charge Number:1292GC001-01	Machine Type: Electron Beam welder
Program Number: O345	Machine Serial Number: 636
Part Name: Tension Test	Gun Type: BK 1.4 mm fil. V-Style Ribbon
Part Number:1242T00102-5 | Rev.N/A | Qty. 1	Operator: Ted Matos
Serial Number: N/A	**Weld Description**
Sketch:	Specification Number: WPS-N-1-08
	Material 1: niobium .118 thick
	Material 2: niobium .118 thick
	Weld Type: Full pen. with cosmetic pass
	Joint Type: interlock
	Joint Thickness: .121
	Tooling
	Fixture Type: test piece holder
	Fixture Angle: 13 degree
	Weld Cycle Data
	Vacuum Level: 2.4 x 10-5
	Ramp Up: N/A
	Over Lap: N/A
	Fade Out: N/A
	Cool down time in vacuum:30 min.
	Back fill time to 20 Torr: 22 min.
	Cool down time at 20 Torr: 15 min.
	Temperature at atmosphere: 99.0

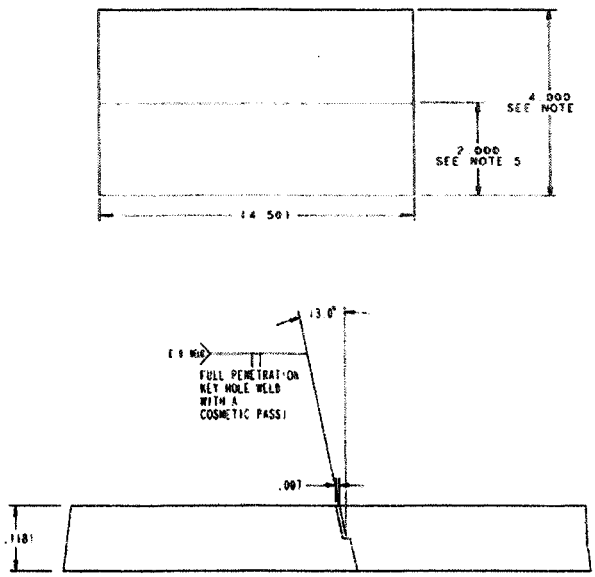

Penetration Requirements:	%	Depth (Inches)	Length
Spot Tack Weld			N/A
Stitch Tack Weld			
Seal Weld			N/A
Weld	100	.121	N/A
Cosmetic Weld			N/A

Weld Type	Beam kV	Beam mA	Frequency Hz	Amplitude (X / Y)	Spot Size Inches	Welding Speed IN / MIN	Welding Speed SEC / REV	Defocus	Gun to work Distance
Tack Weld	100	7	1000	X=.003 Y=.003	X=.003 Y=.003	18	N/A	-1/2 "	11
Weld Pass	100	18	1000	X=.3 Y=.3	X=.009 Y=.009	18	N/A	-1/2 " (570)	11
Cosmetic Pass	100	18	1000	X=.3 Y=.3	X= .009 Y=.009	18	N/A	+4" (610)	11
				X= Y=	X= Y=				

Comments: Parts were weld with no .007 offset, The fade out seemed to be slightly on edge of joint. Sectioned, Etched and the whole joint was consumed by the weld.
"No fit up gap, No filler material and No Pre-heat of parts required"

Certified Test Report

LABORATORY TESTING INC.
2331 Topaz Drive, Hatfield, PA 19440
Phone: 800-219-9095 • Fax: 800-219-9096

BNL001-09-05-15980-2

Accredited Nadcap™
Materials Testing Laboratory
Nondestructive Testing

SOLD TO
Brookhaven National Laboratory
Collider-Accelerator Dept.
Building 911A
Upton, NY 11973-5000

SHIP TO
Brookhaven National Laboratory
Collider-Accelerator Dept.
Building 911A
Upton, NY 11973-5000
ATTN: G. T. McIntyre

CUSTOMER P.O.	CERTIFICATION DATE	SHIP VIA
BNL-0000148742	6/18/2009	EMAIL & UPS

DESCRIPTION

Quantity:	1
Size:	4" x 4 1/2"
PO Line Item No.:	1 & 2
Drawing No.:	1242T00 102
Weld Type:	Angle Interlocking Butt
Weld Thicknesses:	0.118 / 0.118
Weld Angle from Norm:	13 Degrees
Material Types:	RRR / RRR
PQR No. (AES-Seq. No):	AES- EGUN-236
Material:	Niobium

TENSILE TEST:

APPLICABLE SPECIFICATIONS: **ASME BPVC, SECTION IX, 2007 EDITION, 2008a ADDENDA**

	Specimen #1	Specimen #2	Specimen #3
Size (Inches)	0.2480 x 0.1010	0.2460 x 0.1000	0.2470 x 0.1025
Area (Square Inches)	0.0250	0.0246	0.0253
Tensile Load (Pounds)	583.50	566.00	610.50
Tensile Strength (KSI)	23.3	23.0	24.1
Yield Load (.2%) (Pounds)	229.5	232.00	263.24
Yield Strength (.2%) (KSI)	9.2	9.4	10.4
Elongation (In 2") (%)	38	35	38
Failure Location	Weld Area	Weld Area	Weld Area
Mode of Fracture	Ductile	Ductile	Ductile

LABORATORY TESTING INC.
2331 Topaz Drive, Hatfield, PA 19440
Phone: 800-219-9095 ◆ Fax: 800-219-9096

Certified Test Report

BNL001-09-05-15980-2

Accredited Nadcap™
Materials Testing Laboratory
Nondestructive Testing

A Macro Examination was performed on (2) pieces of the submitted Test Specimens in accordance with Customer Instructions with the following results:

ACTUAL: The samples were sectioned, ground, and etched in accordance with LTI Procedure Numbers 90-MACRO-1, Rev. 2, Dated 11/2/06 and 90-MICRO-1, Rev. 6, Dated 6/18/01.

Representative photographs revealed that the general macrostructure of the materials exhibited no evidence of cracking, excessive amounts of inclusions or significant porosity as shown in Figures 3 and 4.

The services performed above were done in accordance with LTI's Quality System Program Manual Revision 18 dated 7/27/07 and ISO/IEC 17025. These results relate only to the items tested and this report shall not be reproduced, except in full, without the written approval of Laboratory Testing, Inc. L.T.I. is accredited by PRI to ISO17025 and by Nadcap for NDT and Materials Testing for the test methods and specific services as listed in the Scopes of Accreditation available at www.labtesting.com and www.eAuditNet.com. The results reported on this test report represent the actual attributes of the material tested and indicate full compliance with all applicable specification and contract requirements.

MERCURY CONTAMINATION: During the testing and inspection, the product did not come in direct contact with mercury or any of its compounds nor with any mercury containing devices employing a single boundary of containment.

NOTE: The recording of false, fictitious or fraudulent statements or entries on this document may be punishable as a felony under Federal Statutes.

Sherri L. Scheifele
QA Specialist

Sherri L Scheifele

By: _____
Authorized Signature

LABORATORY TESTING INC.
2331 Topaz Drive, Hatfield, PA 19440
Phone: 800-219-9095 ◆ Fax: 800-219-9096

Certified Test Report

BNL001-09-05-15980-2

Accredited Nadcap™
Materials Testing Laboratory
Nondestructive Testing

PHOTOGRAPHIC SUBMITTAL

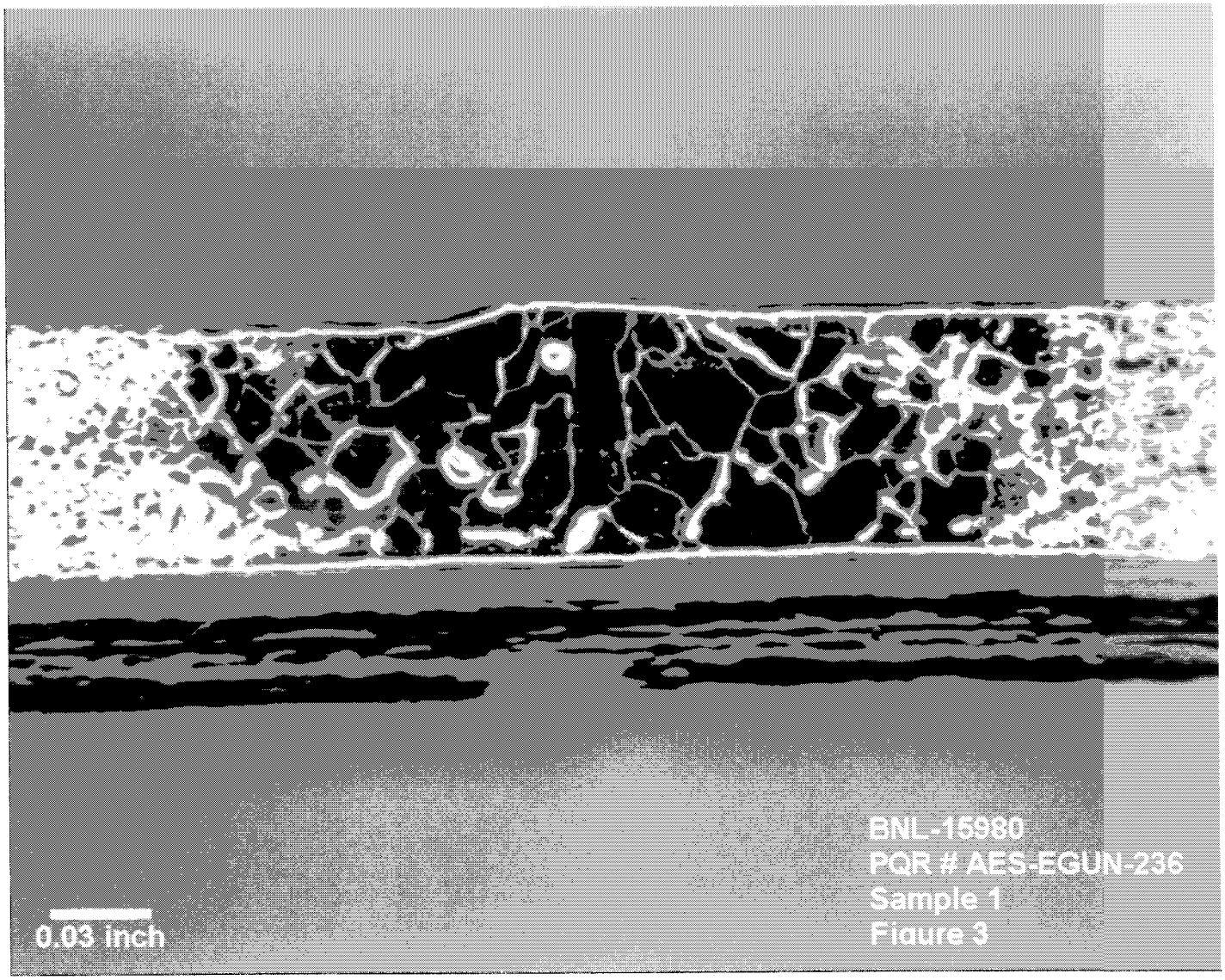

FIGURE 3

LABORATORY TESTING INC.
2331 Topaz Drive, Hatfield, PA 19440
Phone: 800-219-9095 ◆ Fax: 800-219-9096

Certified Test Report

BNL001-09-05-15980-2

Accredited Nadcap™
Materials Testing Laboratory
Nondestructive Testing

PHOTOGRAPHIC SUBMITTAL

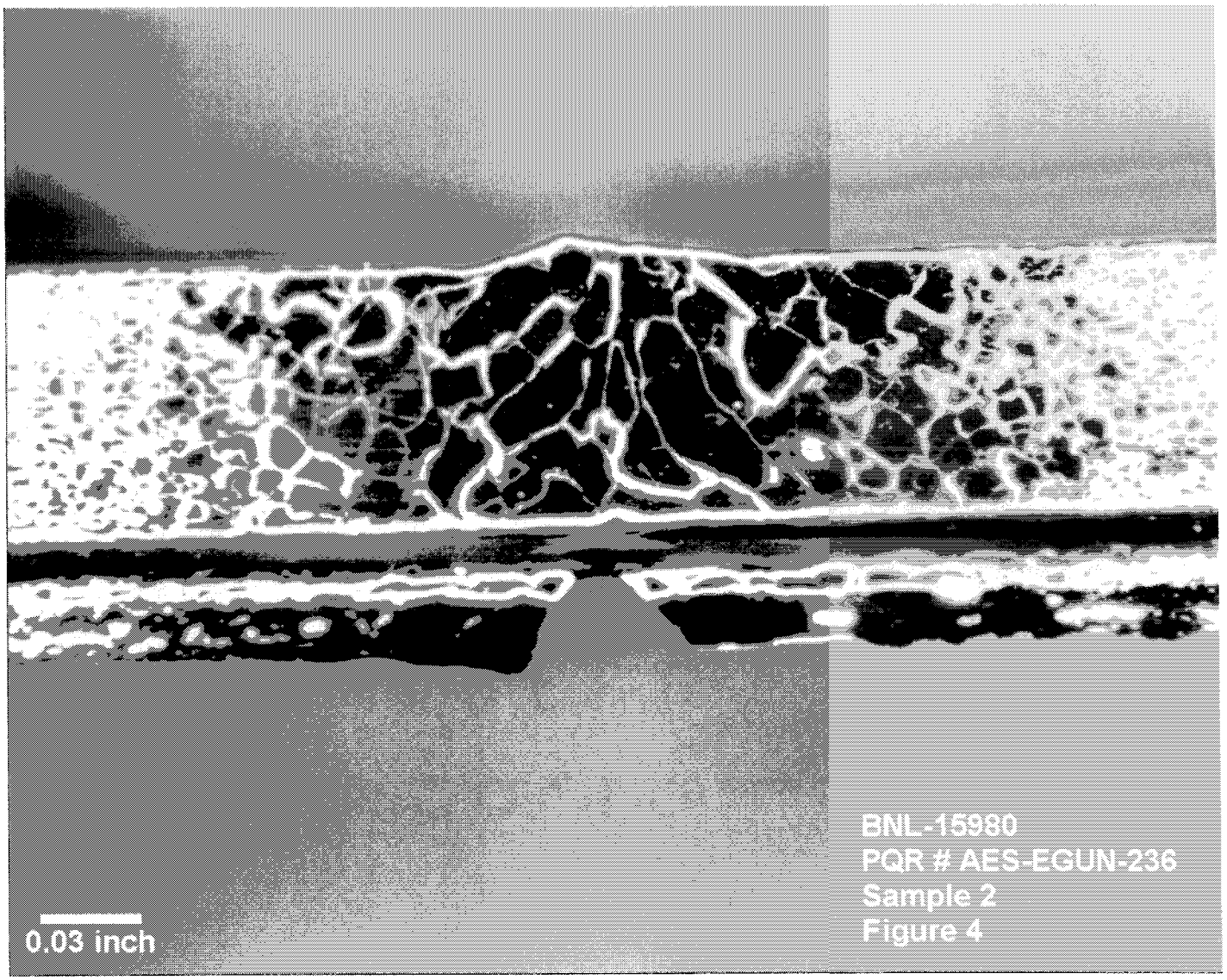

FIGURE 4

Electron Beam Welding Data Sheet

WO/ST No.: 001602	Seq. No. 241
Operation No.: 6&7	Sheet 1 of 1

Customer: Brookhaven National Lab.	Vendor used for welding: Advance Energy Systems inc.
Date: 2/17/2009 | Charge Number: GC1292-001	Machine Type: Electron Beam Welder
Program Number: 0345	Machine Serial Number: 636
Part Name: Tension specimen plate	Gun Type: BK 1.4 mm fil. V-Style Ribbon
Part Number:1242T00103-5 | Rev.n/a | Qty. 1	Operator: Ted Matos
Serial Number: N/A	**Weld Description**
Sketch: thickness .253	Specification Number: WPS-N-108
	Material 1: Niobium .253 thick
	Material 2: Niobium .253 thick
	Weld Type: full pen. with cosmetic pass
	Joint Type: interlock
	Joint Thickness: .253
	Tooling
	Fixture Type: test piece holder
	Fixture Angle: 0 degree
	Weld Cycle Data
	Vacuum Level: 2.0 x 10-5
	Ramp Up: N/A
	Over Lap: N/A
	Fade Out: N/A
	Cool down time in vacuum: 30min.
	Back fill time to 20 Torr: 22 min.
	Cool down time at 20 Torr: 15 min.
	Temperature at atmosphere: 99.0

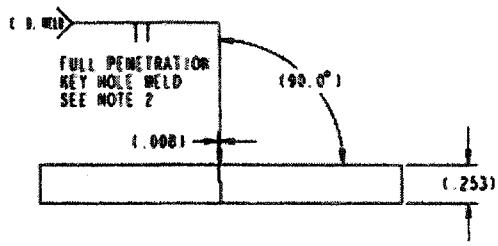

Align cross hairs .008 off joint

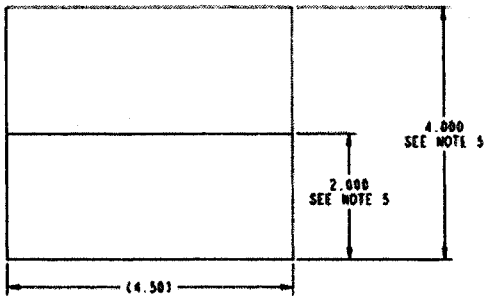

Penetration Requirements:	%	Depth (Inches)	Length
Spot Tack Weld			N/A
Stitch Tack Weld			
Seal Weld			N/A
Weld	100	.253	N/A
Cosmetic Weld			N/A

Weld Type	Beam kV	Beam mA	Frequency Hz	Amplitude (X / Y)	Spot Size Inches	Welding Speed IN / MIN	Welding Speed SEC / REV	Defocus	Gun to work Distance
Tack Weld	100	7	1000	X=2.5 Y= 2.5	X=.034 Y=.034	18	N/A	- ½"	11"
Weld Pass	100	47	1000	X=2.5 Y=2.5	X=.034 Y=.034	18	N/A	-1/2" (570)	11"
Cosmetic Pass	100	37	1000	X=2.5 Y=2.5	X= .034 Y=.034	18	N/A	+4 (610)	11"
				X= Y=	X= Y=				

Comments: "No fit up gap, No filler material and No Pre-heat of parts required" Visual inspection good.

Certified Test Report

LABORATORY TESTING INC.
2331 Topaz Drive, Hatfield, PA 19440
Phone: 800-219-9095 • Fax: 800-219-9096

BNL001-09-05-15980-3

Accredited Nadcap™
Materials Testing Laboratory
Nondestructive Testing

SOLD TO
Brookhaven National Laboratory
Collider-Accelerator Dept.
Building 911A
Upton, NY 11973-5000

SHIP TO
Brookhaven National Laboratory
Collider-Accelerator Dept.
Building 911A
Upton, NY 11973-5000
ATTN: G. T. McIntyre

CUSTOMER P.O.
BNL-0000148742

CERTIFICATION DATE
6/18/2009

SHIP VIA
EMAIL & UPS

DESCRIPTION

Quantity:	1
Size:	4" x 4 1/2"
PO Line Item No.:	1 & 2
Drawing No.:	1242T00 103
Weld Type:	Interlocking Butt
Weld Thicknesses:	0.253 / 0.253
Weld Angle from Norm:	N/A
Material Types:	RRR / RRR
PQR No. (AES-Seq. No):	AES- EGUN-241
Material:	Niobium

TENSILE TEST:

APPLICABLE SPECIFICATIONS: **ASME BPVC, SECTION IX, 2007 EDITION, 2008a ADDENDA**

	Specimen #1	Specimen #2	Specimen #3
Size (Inches)	0.2480 x 0.2550	0.2475 x 0.2500	0.2455 x 0.2495
Area (Square Inches)	0.0632	0.0619	0.0613
Tensile Load (Pounds)	1,377.50	1,312.50	1,257.50
Tensile Strength (KSI)	21.8	21.2	20.5
Yield Load (.2%) (Pounds)	602.50	490.00	492.50
Yield Strength (.2%) (KSI)	9.5	7.9	8.0
Elongation (In 2") (%)	47	45	50
Failure Location	Weld Area	Weld Area	Weld Area
Mode of Fracture	Ductile	Ductile	Ductile

LABORATORY TESTING INC.
2331 Topaz Drive, Hatfield, PA 19440
Phone: 800-219-9095 • Fax: 800-219-9096

Certified Test Report

BNL001-09-05-15980-3

Accredited Nadcap™
Materials Testing Laboratory
Nondestructive Testing

A Macro Examination was performed on (2) pieces of the submitted Test Specimens in accordance with Customer Instructions with the following results:

ACTUAL: The samples were sectioned, ground, and etched in accordance with LTI Procedure Numbers 90-MACRO-1, Rev. 2, Dated 11/2/06 and 90-MICRO-1, Rev. 6, Dated 6/18/01.

Representative photographs revealed that the general macrostructure of the materials exhibited no evidence of cracking, excessive amounts of inclusions or significant porosity as shown in Figures 5 and 6.

The services performed above were done in accordance with LTI's Quality System Program Manual Revision 18 dated 7/27/07 and ISO/IEC 17025. These results relate only to the items tested and this report shall not be reproduced, except in full, without the written approval of Laboratory Testing, Inc. L.T.I. is accredited by PRI to ISO17025 and by Nadcap for NDT and Materials Testing for the test methods and specific services as listed in the Scopes of Accreditation available at www.labtesting.com and www.eAuditNet.com. The results reported on this test report represent the actual attributes of the material tested and indicate full compliance with all applicable specification and contract requirements.

MERCURY CONTAMINATION: During the testing and inspection, the product did not come in direct contact with mercury or any of its compounds nor with any mercury containing devices employing a single boundary of containment.

NOTE: The recording of false, fictitious or fraudulent statements or entries on this document may be punishable as a felony under Federal Statutes.

Sherri L. Scheifele
QA Specialist

Sherri L Scheifele

By: _____
Authorized Signature

LABORATORY TESTING INC.
2331 Topaz Drive, Hatfield, PA 19440
Phone: 800-219-9095 • Fax: 800-219-9096

Certified Test Report

BNL001-09-05-15980-3

Accredited Nadcap™
Materials Testing Laboratory
Nondestructive Testing

PHOTOGRAPHIC SUBMITTAL

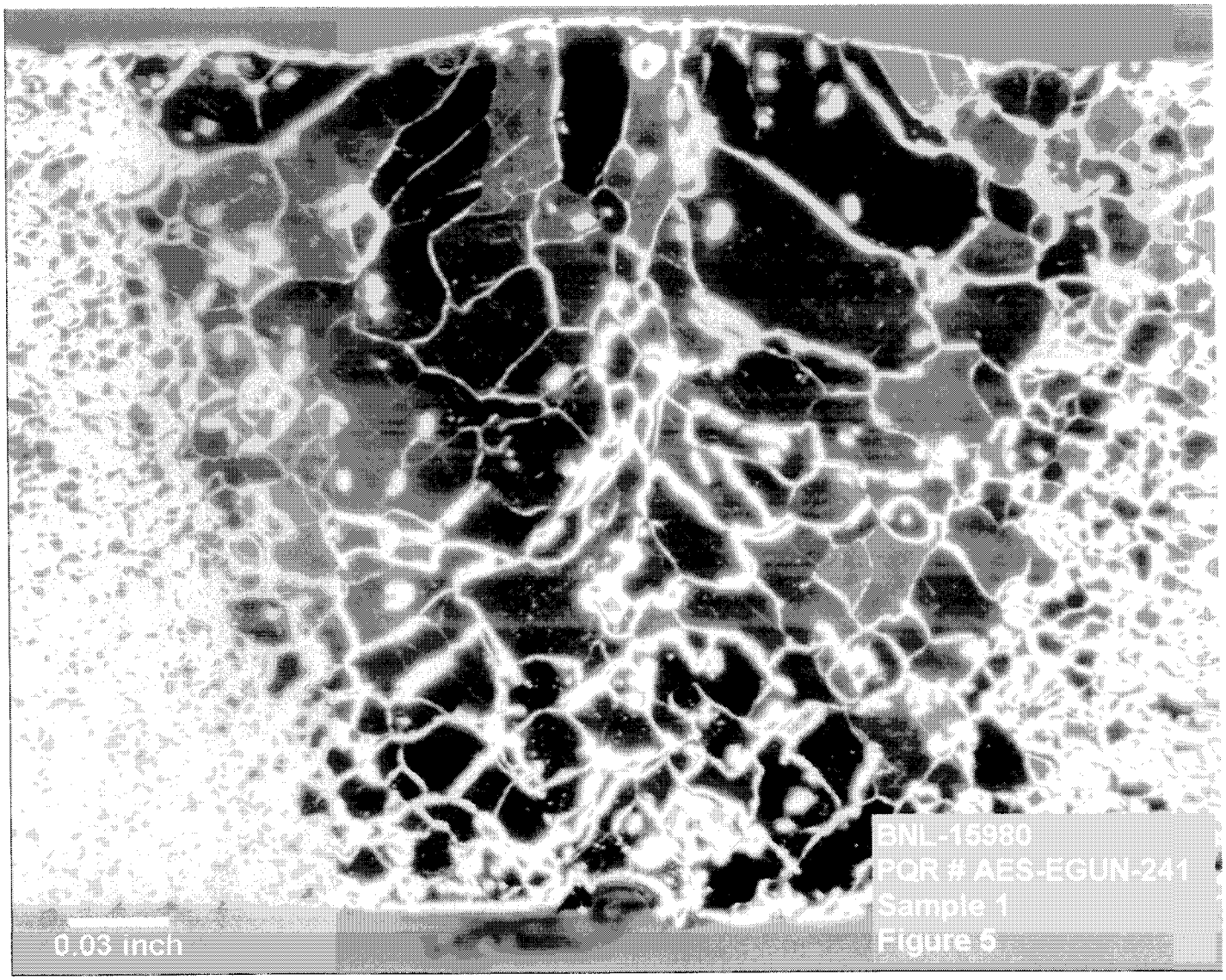

FIGURE 5

LABORATORY TESTING INC.
2331 Topaz Drive, Hatfield, PA 19440
Phone: 800-219-9095 • Fax: 800-219-9096

Certified Test Report

BNL001-09-05-15980-3

Accredited Nadcap™
Materials Testing Laboratory
Nondestructive Testing

PHOTOGRAPHIC SUBMITTAL

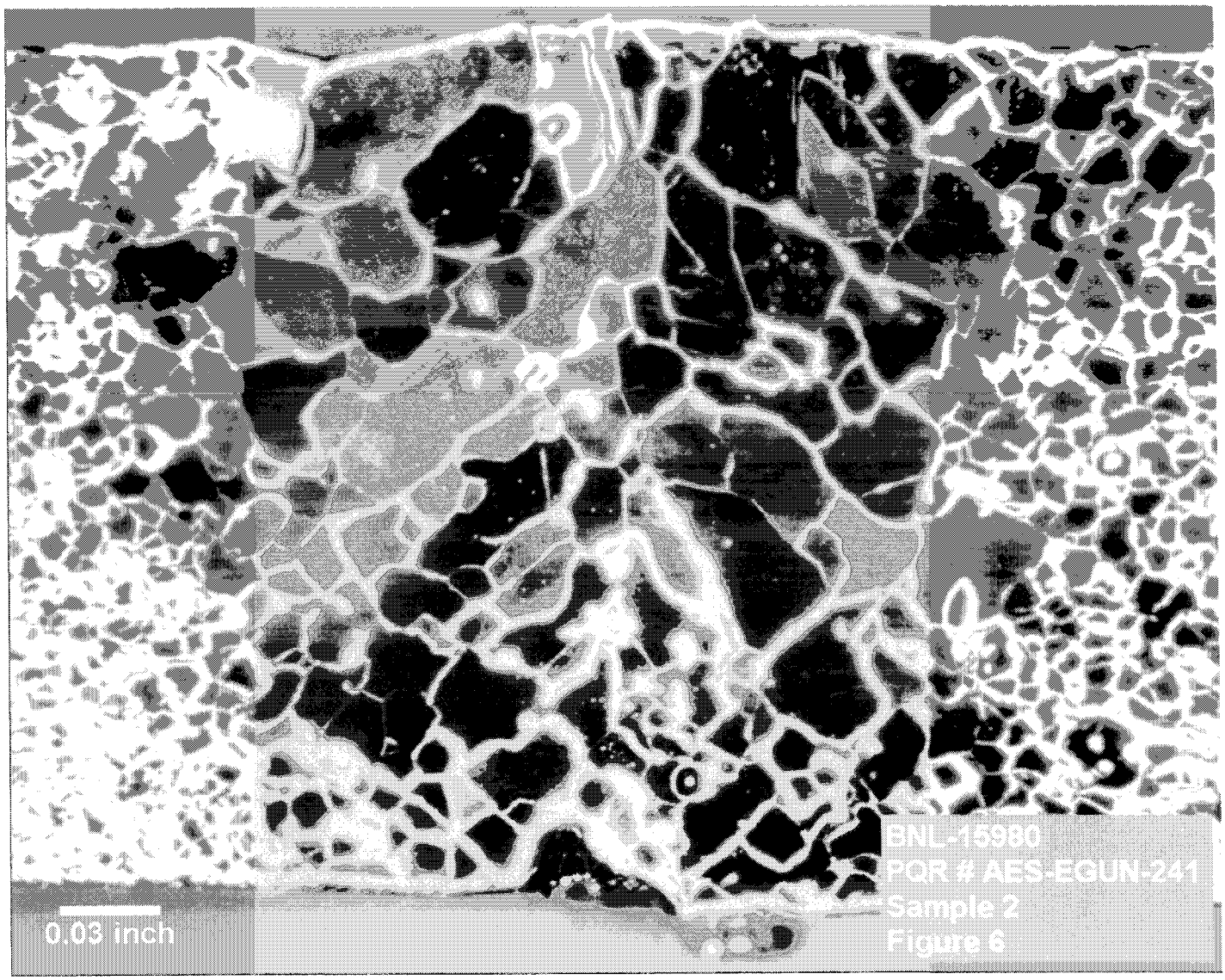

FIGURE 6

Electron Beam Welding Data Sheet

WO/ST No.: 001603	Seq. No. 256
Operation No.: 6 & 7	Sheet 1 of 1

Customer: Brookhaven National Lab.		
Date: 3/11/2009	Charge Number: GC1292-001	
Program Number: o345		
Part Name: Tension Specimen		
Part Number:1242T00104-5	Rev. A	Qty. 1
Serial Number: N/A		

Sketch:

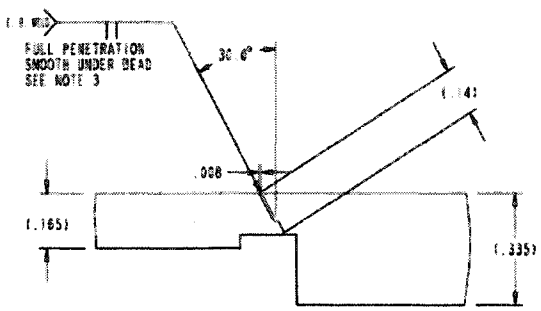

Vendor used for welding: Advanced Energy Systems, Inc.
Machine Type: Electron Beam Welder
Machine Serial Number: 636
Gun Type: BK1.4: 1.4 mm FILA. V-STYLE
Operator: Ted Matos
Weld Description
Specification Number: WPS-N-1-08
Material 1: niobium .335 thick
Material 2: niobium .165 thick
Weld Type: full penetration with smooth underbead
Joint Type: angle interlocking butt
Joint Thickness: .140
Tooling
Fixture Type: test plate holder
Fixture Angle: 30 degree angle
Weld Cycle Data
Vacuum Level: 3 x10-5
Ramp Up: N/A
Over Lap: N/A
Fade Out: N/A
Cool down time in vacuum: 40 min.
Back fill time to 20 Torr: N/A
Cool down time at 20 Torr: N/A
Temperature at atmosphere: 105.0

Penetration Requirements:	%	Depth (Inches)	Length
Spot Tack Weld			N/A
Stitch Tack Weld			N/A
Seal Weld			N/A
Weld	100 %	.140	N/A
Cosmetic Weld			N/A

Weld Type	Beam KV	Beam MA	Frequency Hz	Amplitude (X / Y)	Spot Size Inches	Welding Speed IN / MIN	Welding Speed SEC / REV	Defocus	Gun to work Distance
Tack Weld	100	3	1000	X=5.0 Y=5.0	X= .045 Y= .045	18	n/a	-4	11
Seal Weld	100	40	1000	X=5.0 Y=5.0	X= .045 Y= .045	18	n/a	-4	11
Weld	100	45	1000	X=5.0 Y=5.0	X= .045 Y= .045	18	n/a	-4 (555)	11
Cosmetic Weld				X= Y=	X= Y=				

Comments: "No fit up gap, No filler material and No Pre-heat of parts required" Surface had a positive crown And melt through was consistent through the whole part.

Certified Test Report

LABORATORY TESTING INC.
2331 Topaz Drive, Hatfield, PA 19440
Phone: 800-219-9095 • Fax: 800-219-9096

BNL001-09-05-15980-4

Accredited Nadcap™
Materials Testing Laboratory
Nondestructive Testing

SOLD TO
Brookhaven National Laboratory
Collider-Accelerator Dept.
Building 911A
Upton, NY 11973-5000

SHIP TO
Brookhaven National Laboratory
Collider-Accelerator Dept.
Building 911A
Upton, NY 11973-5000
ATTN: G. T. McIntyre

CUSTOMER P.O.
BNL-0000148742

CERTIFICATION DATE
6/18/2009

SHIP VIA
EMAIL & UPS

DESCRIPTION

Quantity:	1
Size:	4" x 4 1/2"
PO Line Item No.:	1 & 2
Drawing No.:	1242T00 104
Weld Type:	Angle Interlocking Butt
Weld Thicknesses:	0.165 / 0.335
Weld Angle from Norm:	30 Degrees
Material Types:	RRR / RRR
PQR No. (AES-Seq. No):	AES- EGUN-256
Material:	Niobium

TENSILE TEST:

APPLICABLE SPECIFICATIONS: **ASME BPVC, SECTION IX, 2007 EDITION, 2008a ADDENDA**

	Specimen #1	Specimen #2	Specimen #3
Size (Inches)	0.2475 x 0.1104	0.2470 x 0.1093	0.2480 x 0.1136
Area (Square Inches)	0.0273	0.0270	0.0282
Tensile Load (Pounds)	522.00	494.00	585.50
Tensile Strength (KSI)	19.1	18.3	20.8
Yield Load (.2%) (Pounds)	251.03	249.00	289.00
Yield Strength (.2%) (KSI)	9.2	9.2	10.3
Elongation (In 2") (%)	33	30	34
Failure Location	Weld Area	Weld Area	Weld Area
Mode of Fracture	Ductile	Ductile	Ductile

LABORATORY TESTING INC.
2331 Topaz Drive, Hatfield, PA 19440
Phone: 800-219-9095 • Fax: 800-219-9096

Certified Test Report

BNL001-09-05-15980-4

Accredited Nadcap™
Materials Testing Laboratory
Nondestructive Testing

A Macro Examination was performed on (2) pieces of the submitted Test Specimens in accordance with Customer Instructions with the following results:

ACTUAL: The samples were sectioned, ground, and etched in accordance with LTI Procedure Numbers 90-MACRO-1, Rev. 2, Dated 11/2/06 and 90-MICRO-1, Rev. 6, Dated 6/18/01.

Representative photographs revealed that the general macrostructure of the materials exhibited no evidence of cracking, excessive amounts of inclusions or significant porosity as shown in Figures 7 and 8.

The services performed above were done in accordance with LTI's Quality System Program Manual Revision 18 dated 7/27/07 and ISO/IEC 17025. These results relate only to the items tested and this report shall not be reproduced, except in full, without the written approval of Laboratory Testing, Inc. L.T.I. is accredited by PRI to ISO17025 and by Nadcap for NDT and Materials Testing for the test methods and specific services as listed in the Scopes of Accreditation available at www.labtesting.com and www.eAuditNet.com. The results reported on this test report represent the actual attributes of the material tested and indicate full compliance with all applicable specification and contract requirements.

MERCURY CONTAMINATION: During the testing and inspection, the product did not come in direct contact with mercury or any of its compounds nor with any mercury containing devices employing a single boundary of containment.

NOTE: The recording of false, fictitious or fraudulent statements or entries on this document may be punishable as a felony under Federal Statutes.

Sherri L. Scheifele
QA Specialist

Sherri L Scheifele

By: _____
Authorized Signature

LABORATORY TESTING INC.
2331 Topaz Drive, Hatfield, PA 19440
Phone: 800-219-9095 • Fax: 800-219-9096

Certified Test Report

BNL001-09-05-15980-4

Accredited Nadcap™
Materials Testing Laboratory
Nondestructive Testing

PHOTOGRAPHIC SUBMITTAL

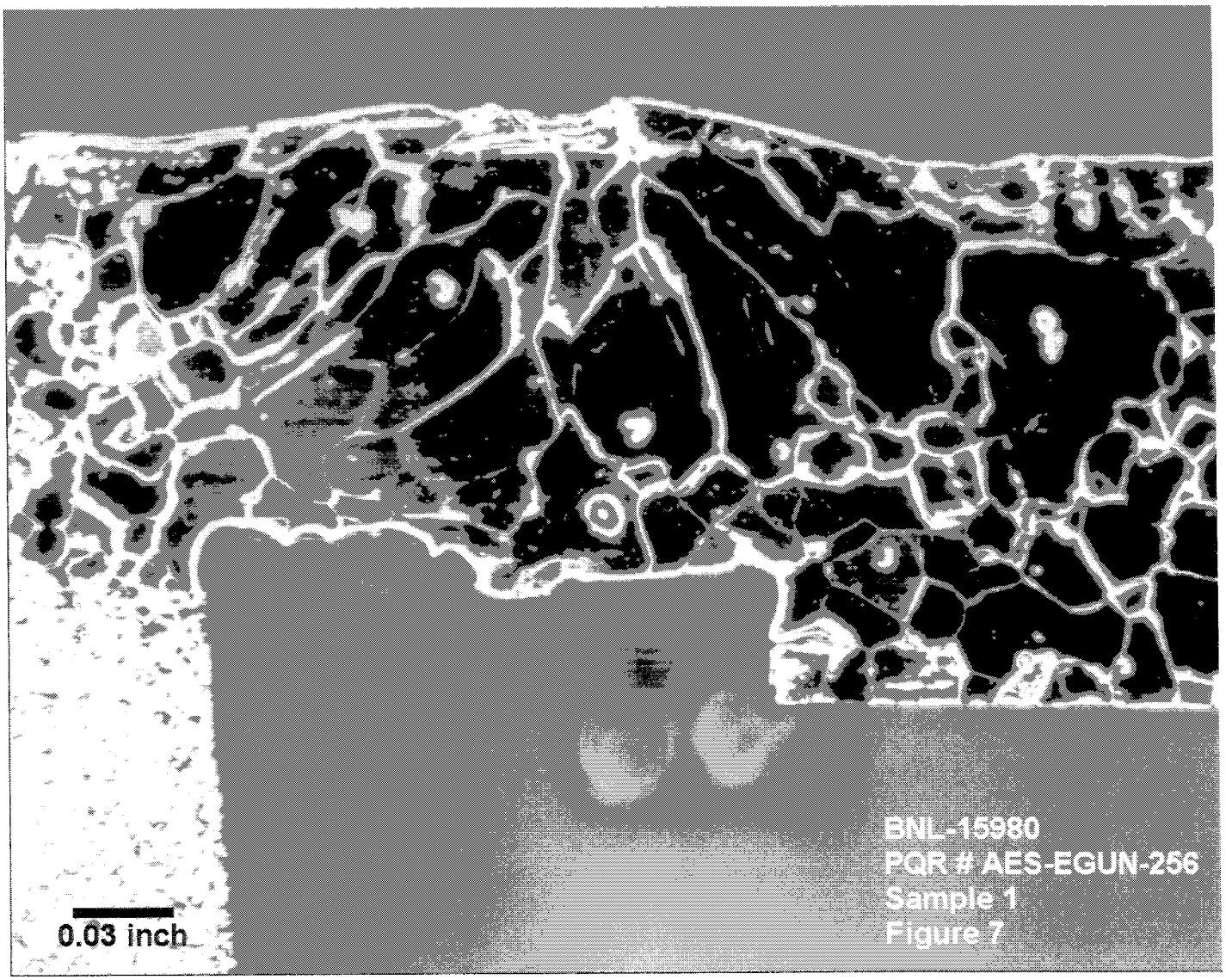

FIGURE 7

LABORATORY TESTING INC.
2331 Topaz Drive, Hatfield, PA 19440
Phone: 800-219-9095 • Fax: 800-219-9096

Certified Test Report

BNL001-09-05-15980-4

Accredited Nadcap™
Materials Testing Laboratory
Nondestructive Testing

PHOTOGRAPHIC SUBMITTAL

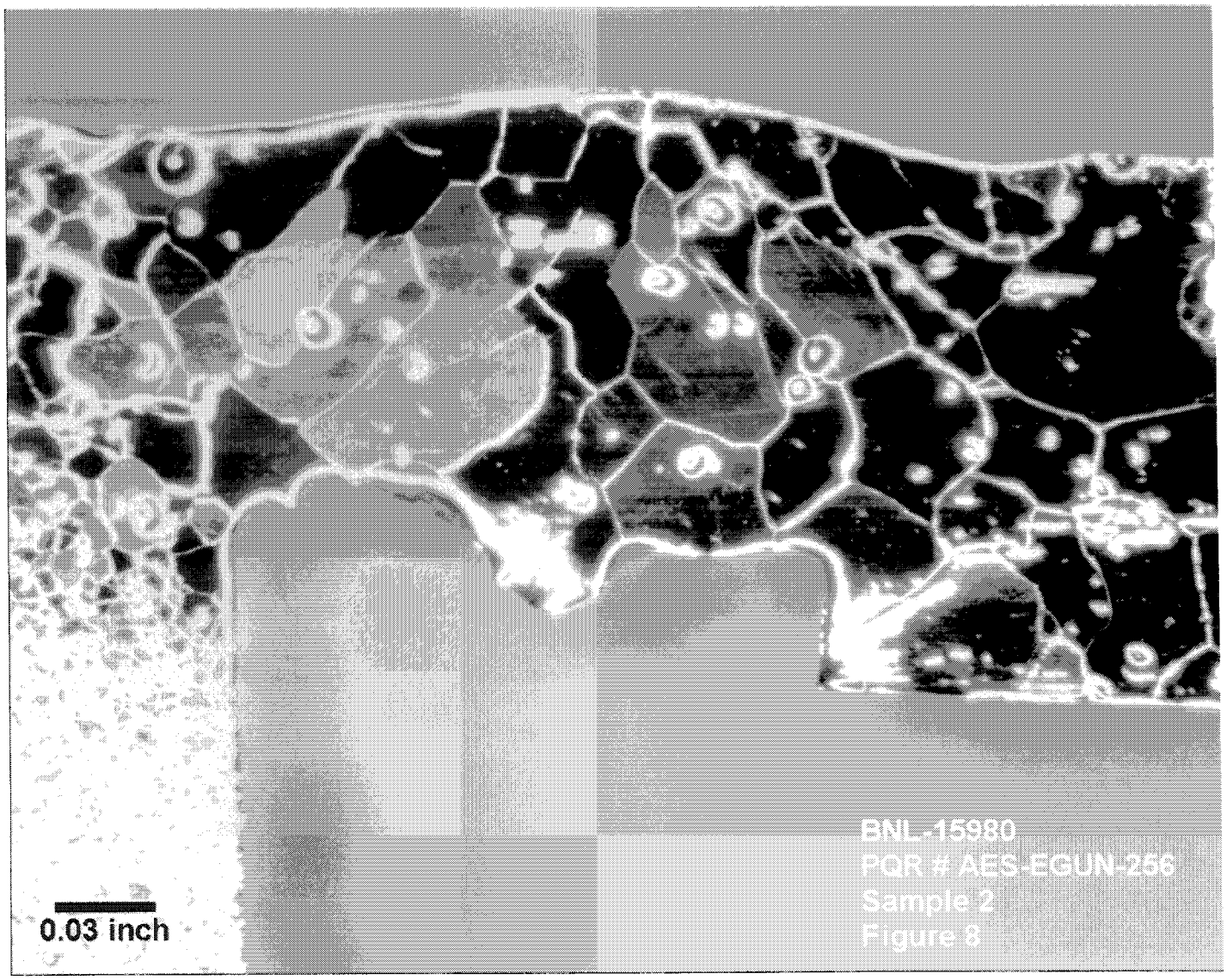

FIGURE 8

Electron Beam Welding Data Sheet

WO/ST No.: 001604	Seq. No. 245-1
Operation No.: 5 & 6	Sheet 1 of 2

Customer: Brookhaven National Lab.	Vendor used for welding: Advanced Energy Systems, Inc.
Date: 3/4/2009 / Charge Number: GC1292	Machine Type: Electron Beam Welder
Program Number: O345	Machine Serial Number:636
Part Name: Tension Specimen	Gun Type: BK 1.4 mm fil. V-style ribbon
Part Number:1292G000106-5 / Rev. / Qty. 1	Operator: Ted Matos
Serial Number: N/A	**Weld Description**
Sketch: op #1	Specification Number: WPS-N-1-08
	Material 1: Niobium .157
	Material 2: Niobium .157
	Weld Type: Keyhole weld
	Joint Type: Interlocking Butt
	Joint Thickness: .157
	Tooling
	Fixture Type: test piece holder
	Fixture Angle: o degrees
	Weld Cycle Data
	Vacuum Level:
	Ramp Up: N/A
	Over Lap: N/A
	Fade Out: N/A
	Cool down time in vacuum: 30 MIN.
	Back fill time to 20 Torr : 22 min.
	Cool down time at 20 Torr : 15 min.
	Temperature at atmosphere: 88.0

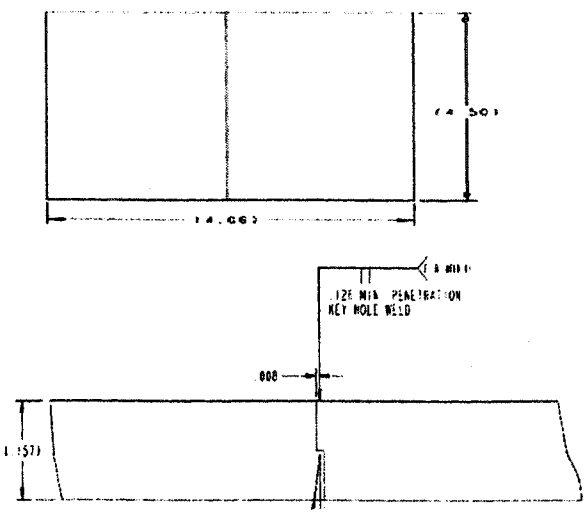

Penetration Requirements:	%	Depth (Inches)	Length
Spot Tack Weld			N/A
Stitch Tack Weld			
Seal Weld			N/A
Weld	80	.134(min.)	N/A
Cosmetic Weld			N/A

Weld Type	Beam KV	Beam MA	Frequency Hz	Amplitude (X / Y)	Spot Size Inches	Welding Speed IN / MIN	Welding Speed SEC / REV	Defocus	Gun to work Distance
Tack Weld	100	7	1000	X=2.5 Y=2.5	X=.034 Y=.034	18	N/A	-1/2"	11"
Weld Pass	100	23	1000	X=2.5 Y=2.5	X= .034 Y= .034	18	N/A	-1/2" (570)	11"
"R F" Pass	N/A	N/A	N/A	X=N/A Y=N/A	X= N/A Y= N/A	N/A	N/A	N/A	N/A
				X= Y=	X= Y=				

Comments: Visual inspection good.

Electron Beam Welding Data Sheet

WO/ST No.: 001604	Seq. No. 245-2
Operation No.: 5 & 6	Sheet 2 of 2

Customer: Brookhaven National Lab.		
Date: 3/4/2009	Charge Number: GC1292	
Program Number: O345		
Part Name: Tension Specimen		
Part Number:1292G000106-5	Rev.	Qty. 1
Serial Number: N/A		

Sketch: 9 degrees op# 2

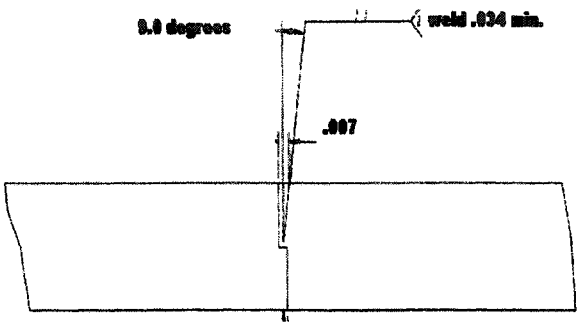

Vendor used for welding: Advanced Energy Systems, Inc.
Machine Type: Electron Beam Welder
Machine Serial Number:636
Gun Type: BK 1.4 mm fil. V-style ribbon
Operator: Ted Matos
Weld Description
Specification Number: WPS-N-1-08
Material 1:Niobium .157
Material 2: Niobium .157
Weld Type: Keyhole weld
Joint Type: interlocking angular
Joint Thickness: .157
Tooling
Fixture Type: test piece holder
Fixture Angle: 9. 0degree
Weld Cycle Data
Vacuum Level:
Ramp Up: N/A
Over Lap: N/A
Fade Out: N/A
Cool down time in vacuum: 60 min
Back fill time to 20 Torr: N/A
Cool down time at 20 Torr:Left under vac.
Temperature at atmosphere: overnight

Penetration Requirements:	%	Depth (Inches)	Length
Spot Tack Weld			N/A
Stitch Tack Weld			
Seal Weld			N/A
Weld	20	.034(min.)	N/A
Cosmetic Weld			N/A

Weld Type	Beam KV	Beam MA	Frequency Hz	Amplitude (X / Y)	Spot Size Inches	Welding Speed IN / MIN	Welding Speed SEC / REV	Defocus	Gun to work Distance
Tack Weld	N/A	N/A	N/A	N/A N/A	N/A N/A	N/A	N/A	N/A	N/A
Weld Pass	N/A	N/A	N/A	X=N/A Y=N/A	X= N/A Y= N/A	N/A	N/A	N/A	N/A
"R F" Pass	100	24	1000	X=3.5 Y=3.5	X= .040 Y=.040	18	N/A	+4 (610)	11
				X= Y=	X= Y=				

Comments: visual inspection good
Tension Z= 7.872

Certified Test Report

LABORATORY TESTING INC.
2331 Topaz Drive, Hatfield, PA 19440
Phone: 800-219-9095 ◆ Fax: 800-219-9096

BNL001-09-05-15980-5

Accredited Nadcap™
Materials Testing Laboratory
Nondestructive Testing

SOLD TO
Brookhaven National Laboratory
Collider-Accelerator Dept.
Building 911A
Upton, NY 11973-5000

SHIP TO
Brookhaven National Laboratory
Collider-Accelerator Dept.
Building 911A
Upton, NY 11973-5000
ATTN: G. T. McIntyre

CUSTOMER P.O.
BNL-0000148742

CERTIFICATION DATE
6/18/2009

SHIP VIA
EMAIL & UPS

DESCRIPTION

Quantity:	1
Size:	4" x 4 1/2"
PO Line Item No.:	1 & 2
Drawing No.:	1242T00 106
Weld Type:	Interlocking Butt
Weld Thicknesses:	0.157 / 0.157
Weld Angle from Norm:	N/A
Material Types:	RRR / RRR
PQR No. (AES-Seq. No):	AES- EGUN-245
Material:	Niobium

TENSILE TEST:

APPLICABLE SPECIFICATIONS: **ASME BPVC, SECTION IX, 2007 EDITION, 2008a ADDENDA**

	Specimen #1	Specimen #2	Specimen #3
Size (Inches)	0.2490 x 0.1409	0.2525 x 0.1472	0.2495 x 0.1424
Area (Square Inches)	0.0351	0.0372	0.0355
Tensile Load (Pounds)	786.00	832.00	813.00
Tensile Strength (KSI)	22.4	22.4	22.9
Yield Load (.2%) (Pounds)	337.00	377.35	369.00
Yield Strength (.2%) (KSI)	9.6	10.1	10.4
Elongation (In 2") (%)	44	41	42
Failure Location	Weld Area	Weld Area	Weld Area
Mode of Fracture	Ductile	Ductile	Ductile

LABORATORY TESTING INC.
2331 Topaz Drive, Hatfield, PA 19440
Phone: 800-219-9095 • Fax: 800-219-9096

Certified Test Report

BNL001-09-05-15980-5

Accredited Nadcap™
Materials Testing Laboratory
Nondestructive Testing

A Macro Examination was performed on (2) pieces of the submitted Test Specimens in accordance with Customer Instructions with the following results:

ACTUAL: The samples were sectioned, ground, and etched in accordance with LTI Procedure Numbers 90-MACRO-1, Rev. 2, Dated 11/2/06 and 90-MICRO-1, Rev. 6, Dated 6/18/01.

Representative photographs revealed that the general macrostructure of the materials exhibited no evidence of cracking, excessive amounts of inclusions or significant porosity as shown in Figures 9 and 10.

The services performed above were done in accordance with LTI's Quality System Program Manual Revision 18 dated 7/27/07 and ISO/IEC 17025. These results relate only to the items tested and this report shall not be reproduced, except in full, without the written approval of Laboratory Testing, Inc. L.T.I. is accredited by PRI to ISO17025 and by Nadcap for NDT and Materials Testing for the test methods and specific services as listed in the Scopes of Accreditation available at www.labtesting.com and www.eAuditNet.com. The results reported on this test report represent the actual attributes of the material tested and indicate full compliance with all applicable specification and contract requirements.

MERCURY CONTAMINATION: During the testing and inspection, the product did not come in direct contact with mercury or any of its compounds nor with any mercury containing devices employing a single boundary of containment.

NOTE: The recording of false, fictitious or fraudulent statements or entries on this document may be punishable as a felony under Federal Statutes.

Sherri L. Scheifele
QA Specialist

Sherri L. Scheifele

By: _____
Authorized Signature

LABORATORY TESTING INC.
2331 Topaz Drive, Hatfield, PA 19440
Phone: 800-219-9095 • Fax: 800-219-9096

Certified Test Report

BNL001-09-05-15980-5

Accredited Nadcap™
Materials Testing Laboratory
Nondestructive Testing

PHOTOGRAPHIC SUBMITTAL

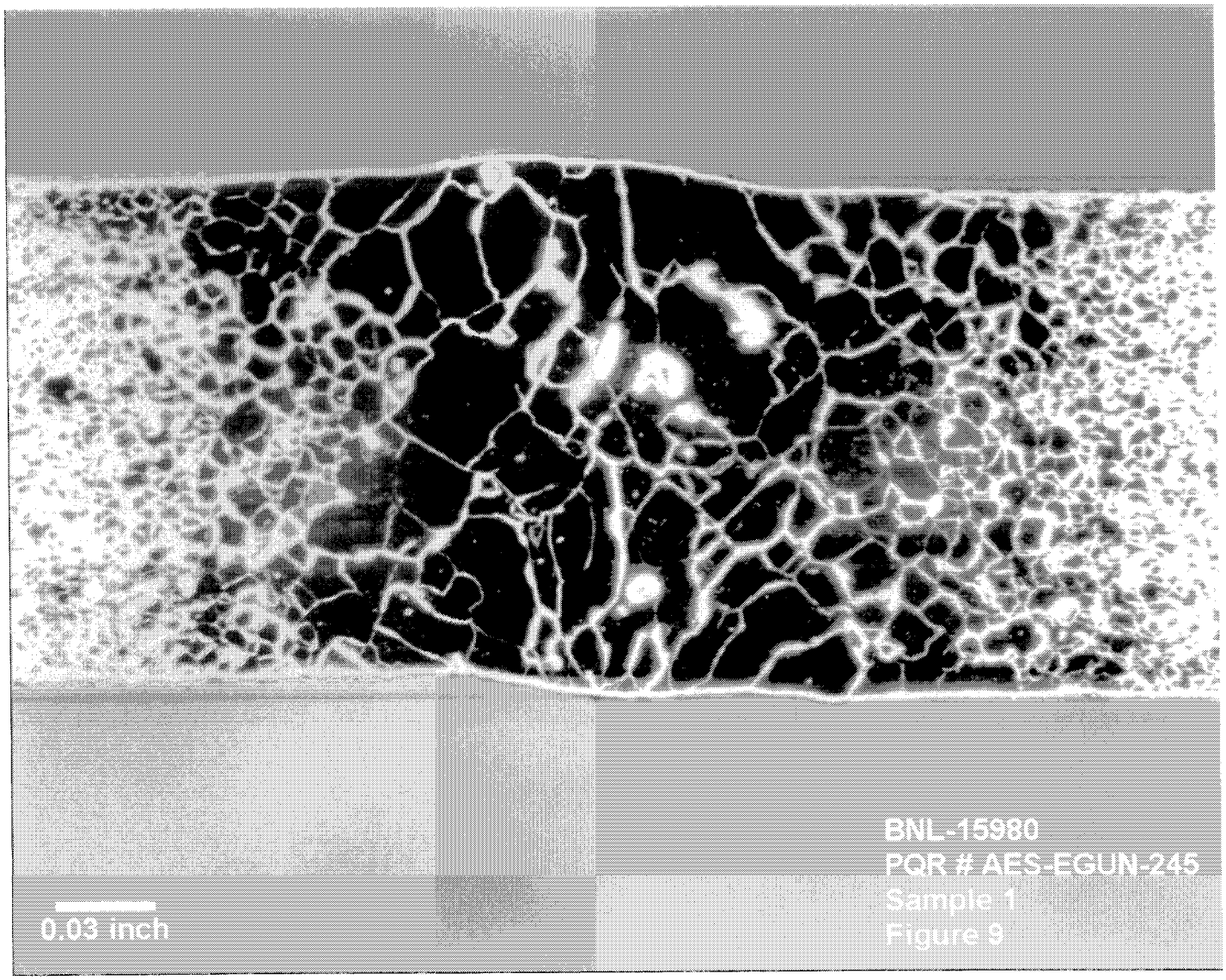

FIGURE 9

LABORATORY TESTING INC.
2331 Topaz Drive, Hatfield, PA 19440
Phone: 800-219-9095 • Fax: 800-219-9096

Certified Test Report

BNL001-09-05-15980-5

Accredited Nadcap™
Materials Testing Laboratory
Nondestructive Testing

PHOTOGRAPHIC SUBMITTAL

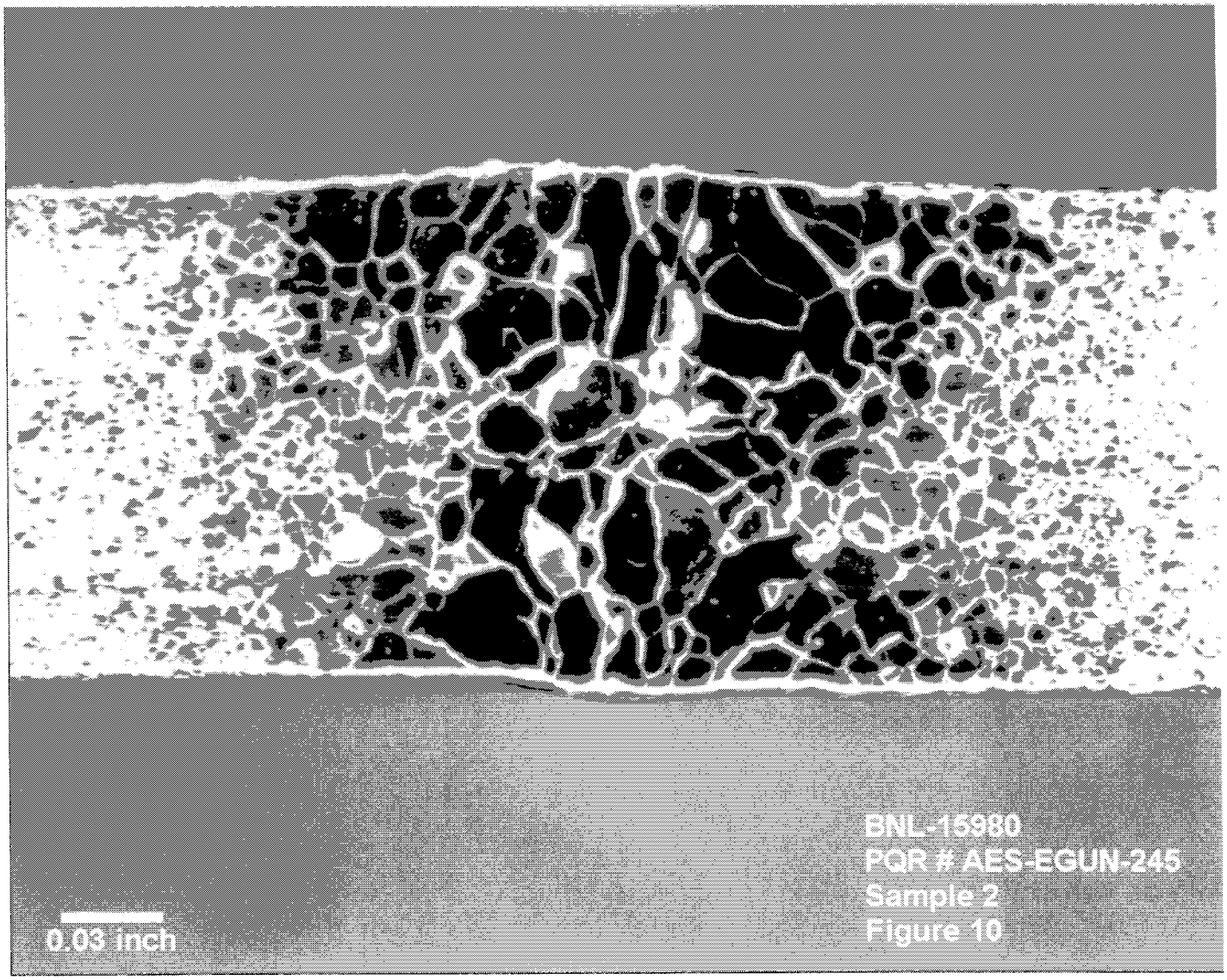

FIGURE 10

Electron Beam Welding Data Sheet

WO/ST No.: 001605	Seq. No. 242-1
Operation No.:	Sheet 1 of 2

Customer: Brookhaven National Lab.	Vendor used for welding: Advanced Energy Systems, Inc.
Date: 2/23/2009 / Charge Number: GC1292	Machine Type: Electron Beam Welder
Program Number: O345	Machine Serial Number:636
Part Name: Tension Specimen	Gun Type: BK 1.4 mm fil. V-style ribbon
Part Number:1292G000107-5 / Rev. / Qty. 1	Operator: Ted Matos
Serial Number: N/A	**Weld Description**
Sketch:	Specification Number: WPS-N-1-08
	Material 1: Niobium .157
	Material 2: Niobium .157
	Weld Type: Keyhole weld
	Joint Type: Interlocking angular
	Joint Thickness: .167
	Tooling
	Fixture Type: test piece holder
	Fixture Angle: 19. 5 degree
	Weld Cycle Data
	Vacuum Level: 3.0 x 10 -5
	Ramp Up: N/A
	Over Lap: N/A
	Fade Out: N/A
	Cool down time in vacuum: 30 MIN.
	Back fill time to 20 Torr: 22 MIN.
	Cool down time at 20 Torr: 15 MIN.
	Temperature at atmosphere: 95.0

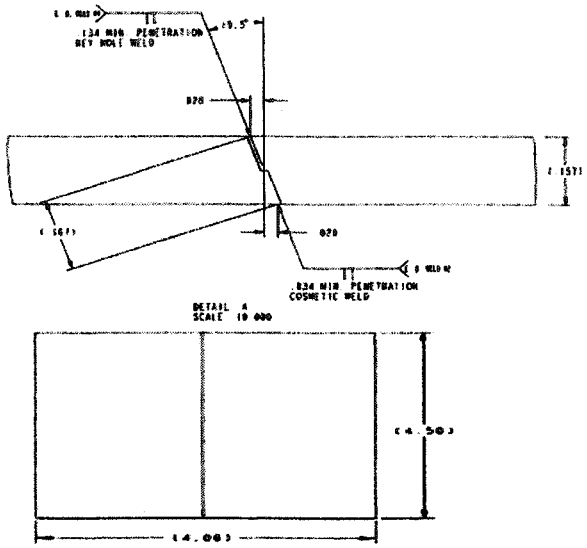

Penetration Requirements:	%	Depth (Inches)	Length
Spot Tack Weld			N/A
Stitch Tack Weld			
Seal Weld			N/A
Weld	80	.134(min.)	N/A
Cosmetic Weld			N/A

Weld Type	Beam KV	Beam MA	Frequency Hz	Amplitude (X / Y)	Spot Size Inches	Welding Speed IN / MIN	Welding Speed SEC / REV	Defocus	Gun to work Distance
Tack Weld	100	7	1000	X=2.5 Y=2.5	X=.034 Y=.034	18	N/A	-1/2"	11"
Weld Pass	100	25	1000	X=2.5 Y=2.5	X= .034 Y= .034	18	N/A	-1/2" (570)	11"
"R F" Pass	N/A	N/A	N/A	X=N/A Y=N/A	X= N/A Y= N/A	N/A	N/A	N/A	N/A
				X= Y=	X= Y=				

Comments: "No fit up gap, No filler material and No Pre-heat of parts required" visual inspection of weld Was good.

Electron Beam Welding Data Sheet

WO/ST No.: 001605	Seq. No. 242-2
Operation No.: 5 & 6	Sheet 2 of 2

Customer: Brookhaven National Lab.	Vendor used for welding: Advanced Energy Systems, Inc.
Date: 2/23/2009 / Charge Number: GC1292	Machine Type: Electron Beam Welder
Program Number: O345	Machine Serial Number:636
Part Name: Tension Specimen	Gun Type: BK 1.4 mm fil. V-style ribbon
Part Number:1292G000107-5 / Rev. / Qty. 1	Operator: Ted Matos
Serial Number: N/A	**Weld Description**
Sketch:	Specification Number: WPS-N-1-08
	Material 1:Niobium .157
	Material 2: Niobium
	Weld Type: Keyhole weld
	Joint Type: interlocking angular
	Joint Thickness: .167
	Tooling
	Fixture Type: test piece holder
	Fixture Angle: 19. 5 degree
	Weld Cycle Data
	Vacuum Level: 3.0 x10 -5
	Ramp Up: N/A
	Over Lap: N/A
	Fade Out: N/A
	Cool down time in vacuum: 30 min
	Back fill time to 20 Torr: 22 min
	Cool down time at 20 Torr: 15 min
	Temperature at atmosphere: 95.0

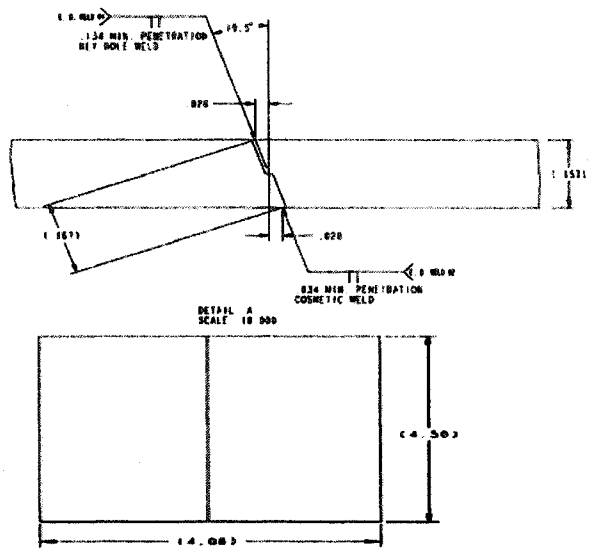

Penetration Requirements:	%	Depth (Inches)	Length
Spot Tack Weld			N/A
Stitch Tack Weld			
Seal Weld			N/A
Weld	20	.034(min.)	N/A
Cosmetic Weld			N/A

Weld Type	Beam KV	Beam MA	Frequency Hz	Amplitude (X / Y)	Spot Size Inches	Welding Speed IN / MIN	Welding Speed SEC / REV	Defocus	Gun to work Distance
Tack Weld	N/A	N/A	N/A	N/A N/A	N/A N/A	N/A	N/A	N/A	N/A
Weld Pass	N/A	N/A	N/A	X=N/A Y=N/A	X= N/A Y= N/A	N/A	N/A	N/A	N/A
"R F" Pass	100	25	1000	X=3.5 Y=3.5	X= .040 Y=.040	18	N/A	+4 (610)	11
				X= Y=	X= Y=				

Comments: "No fit up gap, No filler material and No Pre-heat of parts required" visual inspection of weld Was good.

Certified Test Report

LABORATORY TESTING INC.
2331 Topaz Drive, Hatfield, PA 19440
Phone: 800-219-9095 ◆ Fax: 800-219-9096

BNL001-09-05-15980-6

Accredited Nadcap™
Materials Testing Laboratory
Nondestructive Testing

SOLD TO
Brookhaven National Laboratory
Collider-Accelerator Dept.
Building 911A
Upton, NY 11973-5000

SHIP TO
Brookhaven National Laboratory
Collider-Accelerator Dept.
Building 911A
Upton, NY 11973-5000
ATTN: G. T. McIntyre

CUSTOMER P.O.
BNL-0000148742

CERTIFICATION DATE
6/18/2009

SHIP VIA
EMAIL & UPS

DESCRIPTION

Quantity:	1
Size:	4" x 4 1/2"
PO Line Item No.:	1 & 2
Drawing No.:	1242T00 107
Weld Type:	Angle Interlocking Butt
Weld Thicknesses:	0.157 / 0.157
Weld Angle from Norm:	19.5 Degrees
Material Types:	RRR / RRR
PQR No. (AES-Seq. No):	AES- EGUN-242
Material:	Niobium

TENSILE TEST:

APPLICABLE SPECIFICATIONS: **ASME BPVC, SECTION IX, 2007 EDITION, 2008a ADDENDA**

	Specimen #1	Specimen #2	Specimen #3
Size (Inches)	0.2465 x 0.1516	0.2460 x 0.1503	0.2495 x 0.1499
Area (Square Inches)	0.0374	0.0370	0.0374
Tensile Load (Pounds)	754.00	780.00	789.00
Tensile Strength (KSI)	20.2	21.1	21.1
Yield Load (.2%) (Pounds)	362.74	379.00	371.00
Yield Strength (.2%) (KSI)	9.7	10.3	9.90
Elongation (In 2") (%)	28	38	40
Failure Location	Weld Area	Weld Area	Weld Area
Mode of Fracture	Ductile	Ductile	Ductile

LABORATORY TESTING INC.
2331 Topaz Drive, Hatfield, PA 19440
Phone: 800-219-9095 • Fax: 800-219-9096

Certified Test Report

BNL001-09-05-15980-6

Accredited Nadcap™
Materials Testing Laboratory
Nondestructive Testing

A Macro Examination was performed on (2) pieces of the submitted Test Specimens in accordance with Customer Instructions with the following results:

ACTUAL: The samples were sectioned, ground, and etched in accordance with LTI Procedure Numbers 90-MACRO-1, Rev. 2, Dated 11/2/06 and 90-MICRO-1, Rev. 6, Dated 6/18/01.

Representative photographs revealed that the general macrostructure of the materials exhibited no evidence of cracking, excessive amounts of inclusions or significant porosity as shown in Figures 11 and 12.

The services performed above were done in accordance with LTI's Quality System Program Manual Revision 18 dated 7/27/07 and ISO/IEC 17025. These results relate only to the items tested and this report shall not be reproduced, except in full, without the written approval of Laboratory Testing, Inc. L.T.I. is accredited by PRI to ISO17025 and by Nadcap for NDT and Materials Testing for the test methods and specific services as listed in the Scopes of Accreditation available at www.labtesting.com and www.eAuditNet.com. The results reported on this test report represent the actual attributes of the material tested and indicate full compliance with all applicable specification and contract requirements.

MERCURY CONTAMINATION: During the testing and inspection, the product did not come in direct contact with mercury or any of its compounds nor with any mercury containing devices employing a single boundary of containment.

NOTE: The recording of false, fictitious or fraudulent statements or entries on this document may be punishable as a felony under Federal Statutes.

Sherri L. Scheifele
QA Specialist

Sherri L. Scheifele

By: _____
Authorized Signature

LABORATORY TESTING INC.
2331 Topaz Drive, Hatfield, PA 19440
Phone: 800-219-9095 • Fax: 800-219-9096

Certified Test Report

BNL001-09-05-15980-6

Accredited Nadcap™
Materials Testing Laboratory
Nondestructive Testing

PHOTOGRAPHIC SUBMITTAL

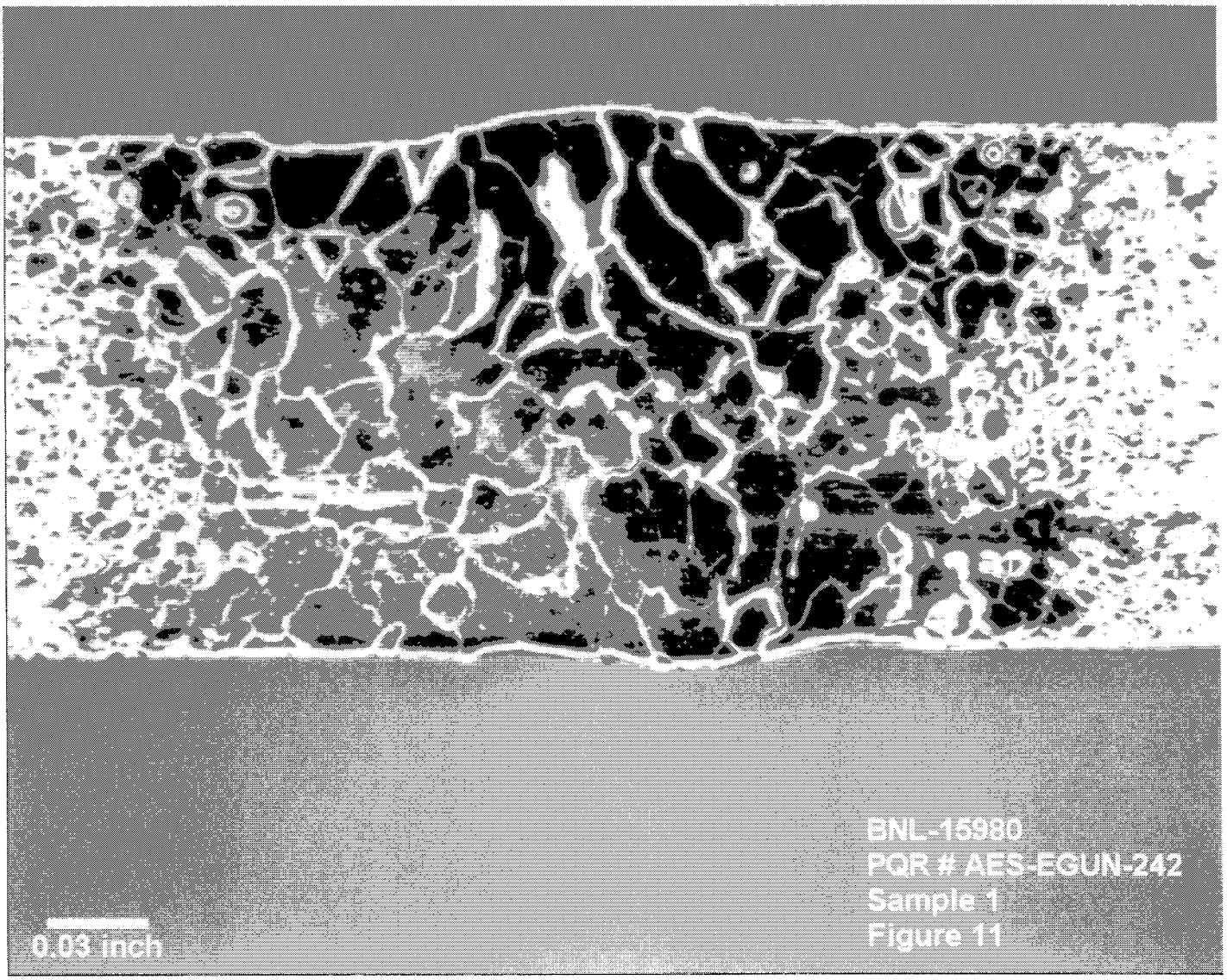

FIGURE 11

LABORATORY TESTING INC.
2331 Topaz Drive, Hatfield, PA 19440
Phone: 800-219-9095 • Fax: 800-219-9096

Certified Test Report

BNL001-09-05-15980-6

Accredited Nadcap™
Materials Testing Laboratory
Nondestructive Testing

PHOTOGRAPHIC SUBMITTAL

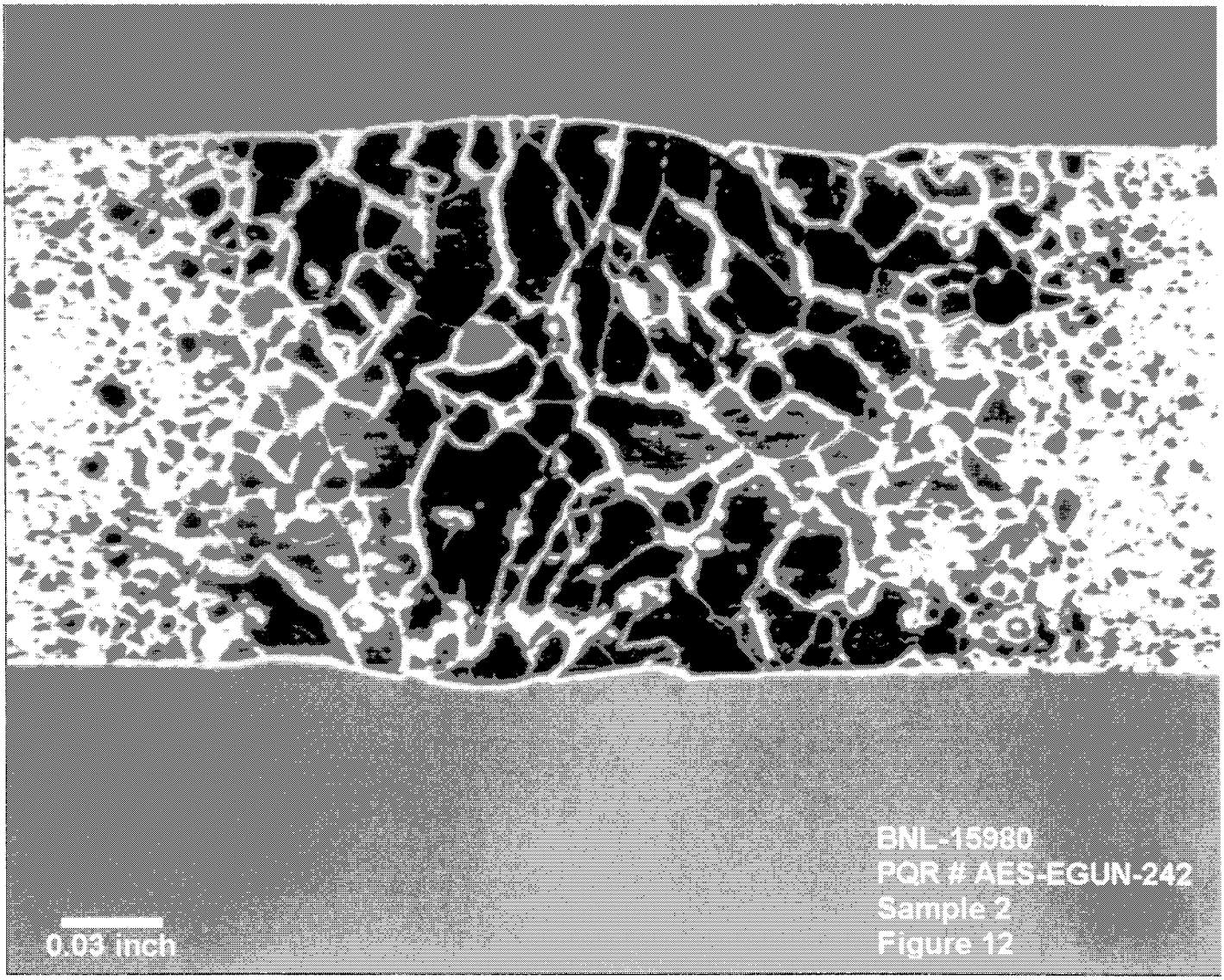

FIGURE 12

Electron Beam Welding Data Sheet

WO/ST No.: 001617	Seq. No. 249
Operation No.: 6 & 7	Sheet 1 of 1

Customer: Brookhaven National Lab.	Vendor used for welding: Advanced Energy Systems, Inc.
Date:4/6/2009 / Charge Number: GC1292-001	Machine Type: Electron Beam Welder
Program Number:	Machine Serial Number: 636
Part Name: Tension Test Specimen	Gun Type: BK1.4: 1.4 mm FILA. V-STYLE
Part Number:1242T00108-5 / Rev. A / Qty. 1	Operator: Ted Matos
Serial Number: N/A	**Weld Description**
Sketch:	Specification Number: WPS-N-1-08
	Material 1:Nb55Ti .330x2.13x4.5
	Material 2: Nb RRR>250
	Weld Type: Full penetration Keyhole weld
	Joint Type: Butt
	Joint Thickness: .330 min. pen.
	Tooling
	Fixture Type: Holding plate
	Fixture Angle: 0
	Weld Cycle Data
	Vacuum Level: 2.8 x 10-5
	Ramp Up: n/a
	Over Lap: n/a
	Fade Out: n/a
	Cool down time in vacuum: 20 min.
	Back fill time to 20 Torr: n/a
	Cool down time at 20 Torr: n/a
	Temperature at atmosphere: 113.0

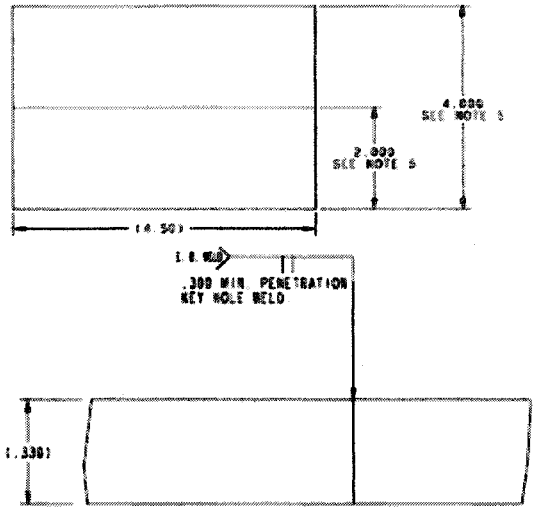

Penetration Requirements:	%	Depth (Inches)	Length
Spot Tack Weld			N/A
Stitch Tack Weld			
Seal Weld			N/A
Weld	100 %	.330 min.	N/A
Cosmetic Weld			N/A

Weld Type	Beam KV	Beam MA	Frequency Hz	Amplitude (X / Y)	Spot Size Inches	Welding Speed IN / MIN	Welding Speed SEC / REV	Defocus	Gun to work Distance
Tack Weld	140	3	N/A	X= N/A Y= N/A	X= N/A Y= N/A	30"		- ½"	11"
Seal Weld	140	11	N/A	X= N/A Y= N/A	X= N/A Y= N/A	30"		- ½"	11"
Weld	140	22	N/A	X= N/A Y= N/A	X= N/A Y= N/A	30"		- ½"	11"
Cosmetic Weld				X= Y=	X= Y=				

Comments: "No fit up gap, No filler material and No Pre-heat of parts required" Surface of weld looks good, Consistent under bead a small crown on the under side.

Certified Test Report

LABORATORY TESTING INC.
2331 Topaz Drive, Hatfield, PA 19440
Phone: 800-219-9095 ◆ Fax: 800-219-9096

BNL001-09-05-15980-7

Accredited Nadcap™
Materials Testing Laboratory
Nondestructive Testing

SOLD TO
Brookhaven National Laboratory
Collider-Accelerator Dept.
Building 911A
Upton, NY 11973-5000

SHIP TO
Brookhaven National Laboratory
Collider-Accelerator Dept.
Building 911A
Upton, NY 11973-5000
ATTN: G. T. McIntyre

CUSTOMER P.O.	CERTIFICATION DATE	SHIP VIA
BNL-0000148742	6/18/2009	EMAIL & UPS

DESCRIPTION

Quantity:	1
Size:	4" x 4 1/2"
PO Line Item No.:	1 & 2
Drawing No.:	1242T00 108
Weld Type:	Butt
Weld Thicknesses:	0.330 / 0.330
Weld Angle from Norm:	N/A
Material Types:	RRR / NbTi
PQR No. (AES-Seq. No):	AES- EGUN-249
Material:	Niobium

TENSILE TEST:

APPLICABLE SPECIFICATIONS: **ASME BPVC, SECTION IX, 2007 EDITION, 2008a ADDENDA**

	Specimen #1	Specimen #2	Specimen #3
Size (Inches)	0.2490 x 0.3250	0.2485 x 0.3239	0.2485 x 0.3300
Area (Square Inches)	0.0809	0.0805	0.0820
Tensile Load (Pounds)	1,990.00	1,952.50	1,967.50
Tensile Strength (KSI)	24.6	24.3	24.0
Yield Load (.2%) (Pounds)	904.89	1,109.50	909.38
Yield Strength (.2%) (KSI)	11.2	13.8	11.1
Elongation (In 2") (%)	42	46	44
Failure Location	Base Metal	Base Metal	Base Metal
Mode of Fracture	Ductile	Ductile	Ductile

LABORATORY TESTING INC.
2331 Topaz Drive, Hatfield, PA 19440
Phone: 800-219-9095 ◆ Fax: 800-219-9096

Certified Test Report

BNL001-09-05-15980-7

Accredited Nadcap™
Materials Testing Laboratory
Nondestructive Testing

A Macro Examination was performed on (2) pieces of the submitted Test Specimens in accordance with Customer Instructions with the following results:

ACTUAL: The samples were sectioned, ground, and etched in accordance with LTI Procedure Numbers 90-MACRO-1, Rev. 2, Dated 11/2/06 and 90-MICRO-1, Rev. 6, Dated 6/18/01.

Representative photographs revealed that the general macrostructure of the materials exhibited no evidence of cracking, excessive amounts of inclusions or significant porosity as shown in Figures 13 and 14.

The services performed above were done in accordance with LTI's Quality System Program Manual Revision 18 dated 7/27/07 and ISO/IEC 17025. These results relate only to the items tested and this report shall not be reproduced, except in full, without the written approval of Laboratory Testing, Inc. L.T.I. is accredited by PRI to ISO17025 and by Nadcap for NDT and Materials Testing for the test methods and specific services as listed in the Scopes of Accreditation available at www.labtesting.com and www.eAuditNet.com. The results reported on this test report represent the actual attributes of the material tested and indicate full compliance with all applicable specification and contract requirements.

MERCURY CONTAMINATION: During the testing and inspection, the product did not come in direct contact with mercury or any of its compounds nor with any mercury containing devices employing a single boundary of containment.

NOTE: The recording of false, fictitious or fraudulent statements or entries on this document may be punishable as a felony under Federal Statutes.

Sherri L. Scheifele
QA Specialist

Sherri L. Scheifele

By: _____
Authorized Signature

LABORATORY TESTING INC.
2331 Topaz Drive, Hatfield, PA 19440
Phone: 800-219-9095 • Fax: 800-219-9096

Accredited Nadcap™
Materials Testing Laboratory
Nondestructive Testing

PHOTOGRAPHIC SUBMITTAL

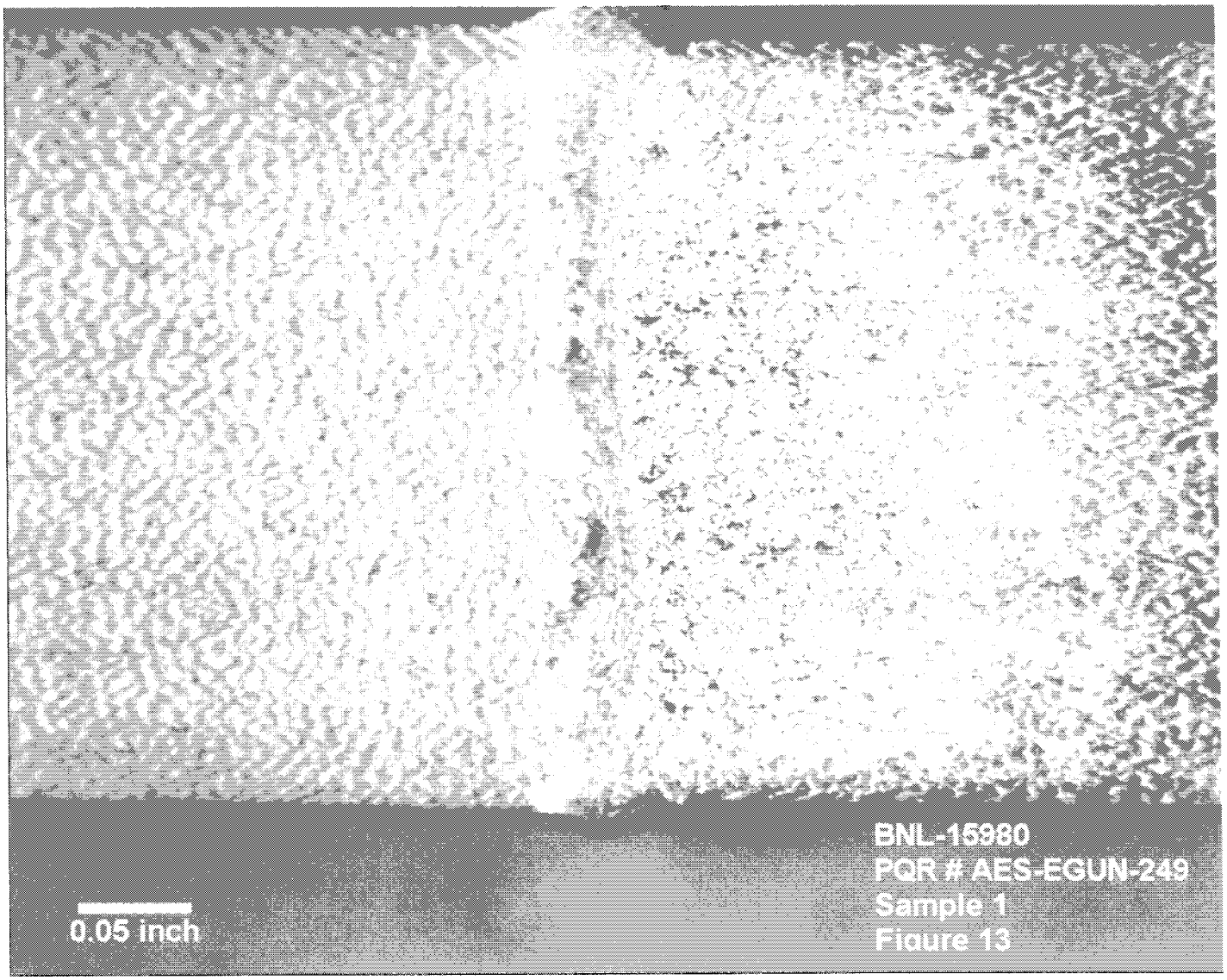

FIGURE 13

LABORATORY TESTING INC.
2331 Topaz Drive, Hatfield, PA 19440
Phone: 800-219-9095 • Fax: 800-219-9096

Certified Test Report

BNL001-09-05-15980-7

Accredited Nadcap™
Materials Testing Laboratory
Nondestructive Testing

PHOTOGRAPHIC SUBMITTAL

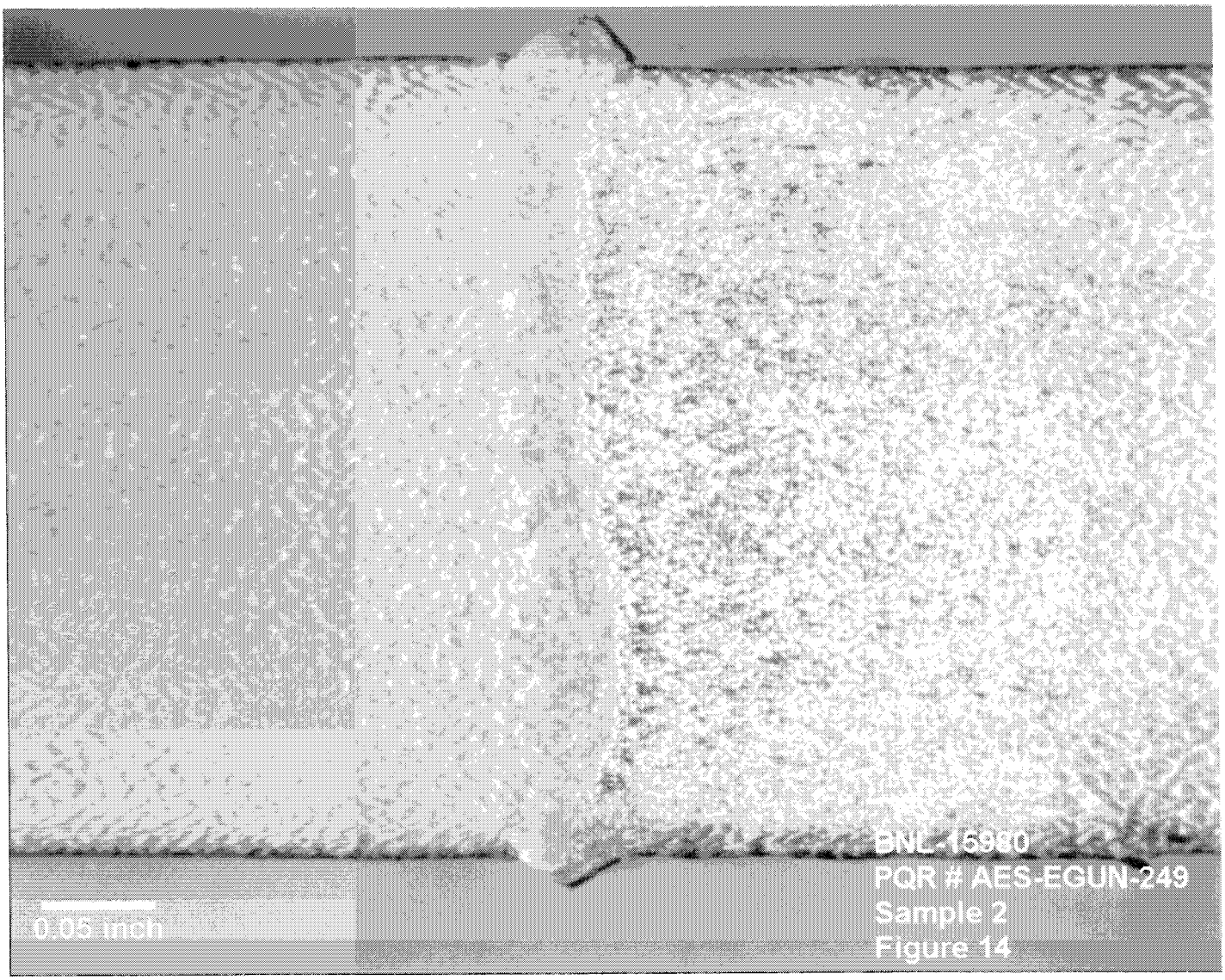

FIGURE 14

Electron Beam Welding Data Sheet

WO/ST No.: 001618	Seq. No. 247
Operation No.: 6&7	Sheet 1 of 1

Customer: Brookhaven National Lab.	Vendor used for welding: Advanced Energy Systems, Inc.
Date:4/2/2009 / Charge Number: GC1292-001	Machine Type: Electron Beam Welder
Program Number: 0345	Machine Serial Number: 636
Part Name: Tension test specimen	Gun Type: BK1.4 : 1.4 mm FILA. V-STYLE
Part Number:1242T00110-5 / Rev. A / Qty. 1	Operator: Ted Matos
Serial Number: N/A	**Weld Description**
Sketch:	Specification Number: WPS-N-1-08
	Material 1:Nb55Ti
	Material 2: Nb RRR>250
	Weld Type: Keyhole full penetration
	Joint Type: Interlocking Butt
	Joint Thickness: .260
	Tooling
	Fixture Type: plate holder
	Fixture Angle: 0 degrees
	Weld Cycle Data
	Vacuum Level: 3.0 x 10-5
	Ramp Up: N/A
	Over Lap: N/A
	Fade Out: N/A
	Cool down time in vacuum: 5 min.
	Back fill time to 20 Torr: N/A
	Cool down time at 20 Torr: N/A
	Temperature at atmosphere: 105.0

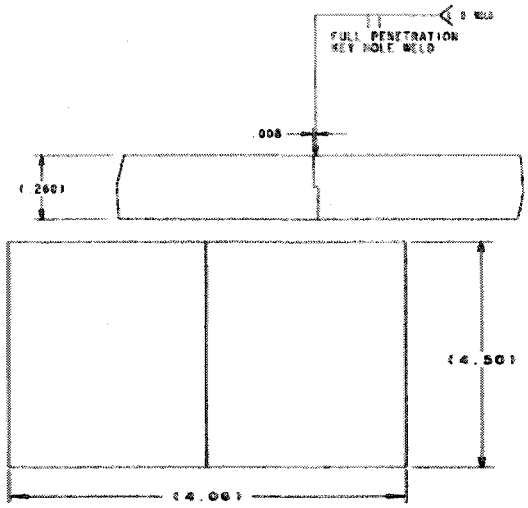

Penetration Requirements:	%	Depth (Inches)	Length
Spot Tack Weld			N/A
Stitch Tack Weld			
Seal Weld			N/A
Weld	100%	.260	N/A
Cosmetic Weld			N/A

Weld Type	Beam KV	Beam MA	Frequency Hz	Amplitude (X / Y)	Spot Size Inches	Welding Speed IN / MIN	Welding Speed SEC / REV	Defocus	Gun to work Distance
Tack Weld	140	3	N/A	X=N/A Y=N/A	X=.005 Y= .005	30"		- ½ "	11"
Seal Weld	140	6	N/A	X=N/A Y=N/A	X= .005 Y= .005	30"		- ½"	11"
Weld	140	19	N/A	X=N/A Y=N/A	X= .005 Y= .005	30"		- ½"	11"
Cosmetic Weld				X= Y=	X= Y=				

Comments: "No fit up gap, No filler material and No Pre-heat of parts required" Weld looked good

Certified Test Report

LABORATORY TESTING INC.
2331 Topaz Drive, Hatfield, PA 19440
Phone: 800-219-9095 • Fax: 800-219-9096

BNL001-09-05-15980-8

Accredited Nadcap™ Materials Testing Laboratory Nondestructive Testing

SOLD TO
Brookhaven National Laboratory
Collider-Accelerator Dept.
Building 911A
Upton, NY 11973-5000

SHIP TO
Brookhaven National Laboratory
Collider-Accelerator Dept.
Building 911A
Upton, NY 11973-5000
ATTN: G. T. McIntyre

CUSTOMER P.O.	CERTIFICATION DATE	SHIP VIA
BNL-0000148742	6/18/2009	EMAIL & UPS

DESCRIPTION

Quantity:	1
Size:	4" x 4 1/2"
PO Line Item No.:	1 & 2
Drawing No.:	1242T00 110
Weld Type:	Butt
Weld Thicknesses:	0.260 / 0.260
Weld Angle from Norm:	N/A
Material Types:	RRR / NbTi
PQR No. (AES-Seq. No):	AES- EGUN-247
Material:	Niobium

TENSILE TEST:

APPLICABLE SPECIFICATIONS: **ASME BPVC, SECTION IX, 2007 EDITION, 2008a ADDENDA**

	Specimen #1	Specimen #2	Specimen #3
Size (Inches)	0.2500 x 0.2480	0.2495 x 0.2401	0.2497 x 0.2477
Area (Square Inches)	0.0620	0.0599	0.0619
Tensile Load (Pounds)	1,475.00	1,445.00	1,470.00
Tensile Strength (KSI)	23.8	24.1	23.8
Yield Load (.2%) (Pounds)	745.00	845.94	740.00
Yield Strength (.2%) (KSI)	12.0	14.1	12.0
Elongation (In 2") (%)	39	39	41
Failure Location	Base Metal-11	Base Metal-11	Base Metal-11
Mode of Fracture	Ductile	Ductile	Ductile

LABORATORY TESTING INC.
2331 Topaz Drive, Hatfield, PA 19440
Phone: 800-219-9095 • Fax: 800-219-9096

Certified Test Report

BNL001-09-05-15980-8

Accredited Nadcap™
Materials Testing Laboratory
Nondestructive Testing

A Macro Examination was performed on (2) pieces of the submitted Test Specimens in accordance with Customer Instructions with the following results:

ACTUAL: The samples were sectioned, ground, and etched in accordance with LTI Procedure Numbers 90-MACRO-1, Rev. 2, Dated 11/2/06 and 90-MICRO-1, Rev. 6, Dated 6/18/01.

Representative photographs revealed that the general macrostructure of the materials exhibited no evidence of cracking, excessive amounts of inclusions or significant porosity as shown in Figures 15 and 16.

The services performed above were done in accordance with LTI's Quality System Program Manual Revision 18 dated 7/27/07 and ISO/IEC 17025. These results relate only to the items tested and this report shall not be reproduced, except in full, without the written approval of Laboratory Testing, Inc. L.T.I. is accredited by PRI to ISO17025 and by Nadcap for NDT and Materials Testing for the test methods and specific services as listed in the Scopes of Accreditation available at www.labtesting.com and www.eAuditNet.com. The results reported on this test report represent the actual attributes of the material tested and indicate full compliance with all applicable specification and contract requirements.

MERCURY CONTAMINATION: During the testing and inspection, the product did not come in direct contact with mercury or any of its compounds nor with any mercury containing devices employing a single boundary of containment.

NOTE: The recording of false, fictitious or fraudulent statements or entries on this document may be punishable as a felony under Federal Statutes.

Sherri L. Scheifele
QA Specialist

Sherri L Scheifele

By: _____
Authorized Signature

LABORATORY TESTING INC.
2331 Topaz Drive, Hatfield, PA 19440
Phone: 800-219-9095 • Fax: 800-219-9096

Certified Test Report

BNL001-09-05-15980-8

Accredited Nadcap™
Materials Testing Laboratory
Nondestructive Testing

PHOTOGRAPHIC SUBMITTAL

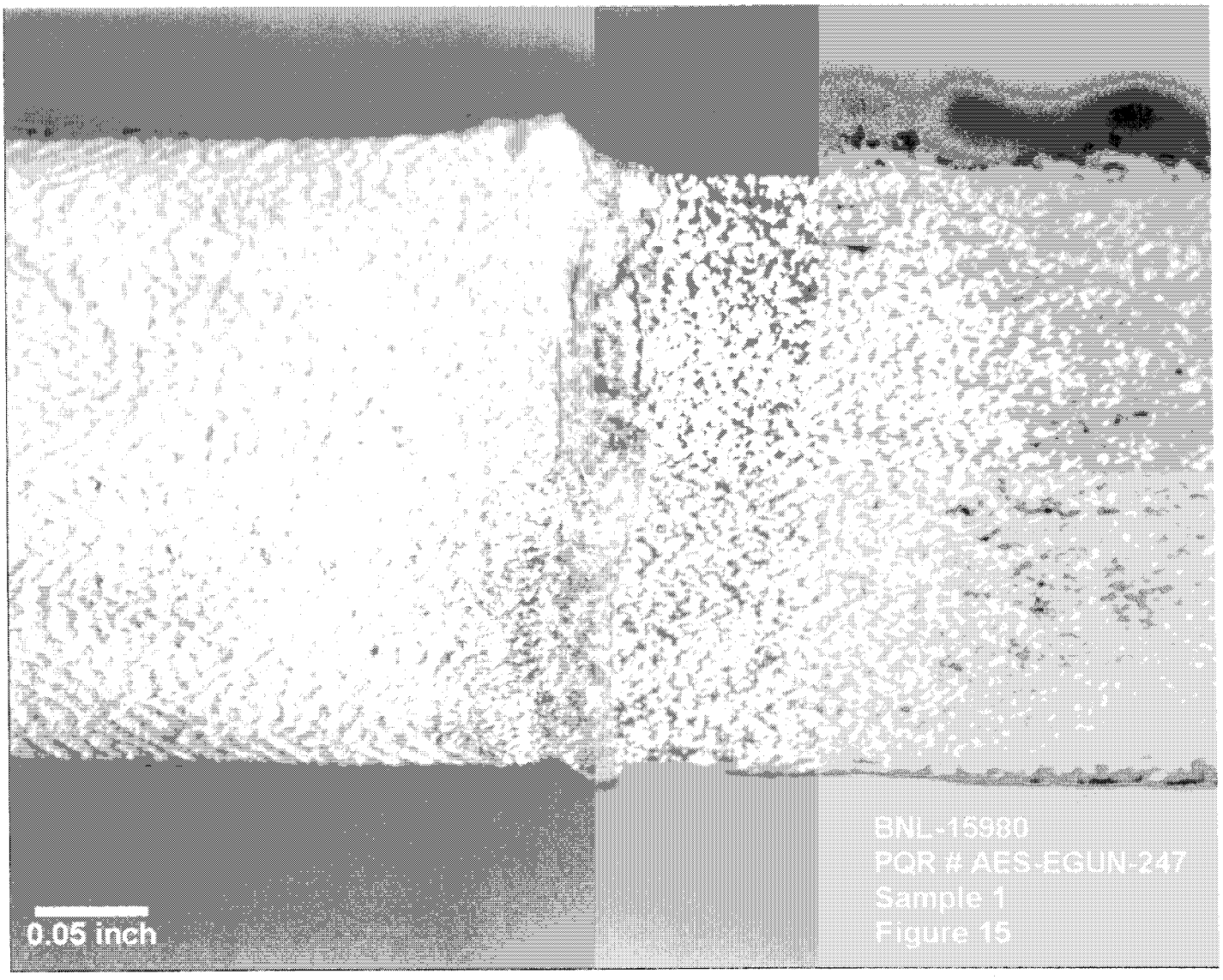

FIGURE 15

LABORATORY TESTING INC.
2331 Topaz Drive, Hatfield, PA 19440
Phone: 800-219-9095 • Fax: 800-219-9096

Certified Test Report

BNL001-09-05-15980-8

Accredited Nadcap™
Materials Testing Laboratory
Nondestructive Testing

PHOTOGRAPHIC SUBMITTAL

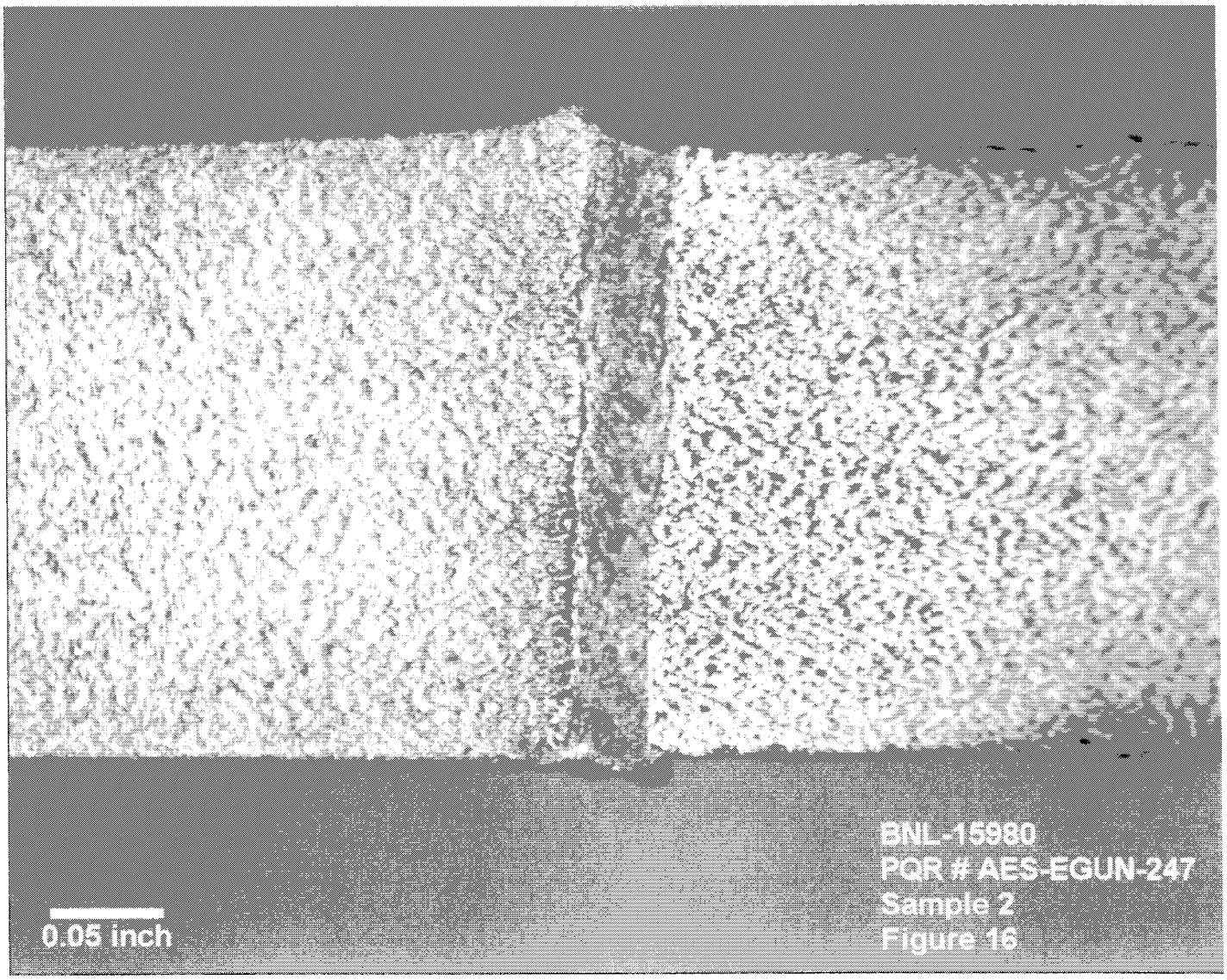

FIGURE 16

Electron Beam Welding Data Sheet

WO/ST No.:001619	Seq. No. 254
Operation No.: 6&7	Sheet 1 of 1

Customer: Brookhaven National Lab.	Vendor used for welding: Advanced Energy Systems, Inc.
Date:4/20/09 / Charge Number: GC1292-001	Machine Type: Electron Beam Welder
Program Number: O345	Machine Serial Number: 636
Part Name: Tension Specimen	Gun Type: BK1.4: 1.4 mm FILA. V-STYLE
Part Number:1242T00111-5 / Rev. A / Qty. 1	Operator: Ted Matos
Serial Number: N/A	**Weld Description**
Sketch:	Specification Number: WPS-N-1-08
	Material 1:NbTi .313x1x5
	Material 2: NbTi .375x2x5
	Weld Type: Full penetration keyhole weld
	Joint Type: Butt with shoulder
	Joint Thickness: .313
	Tooling
	Fixture Type: plate holder
	Fixture Angle: no angle
	Weld Cycle Data
	Vacuum Level: 3.0 x 10-5
	Ramp Up: N/A
	Over Lap: N/A
	Fade Out: N/A
	Cool down time in vacuum: left under vac.
	Back fill time to 20 Torr: over night
	Cool down time at 20 Torr: N/A
	Temperature at atmosphere: N/A

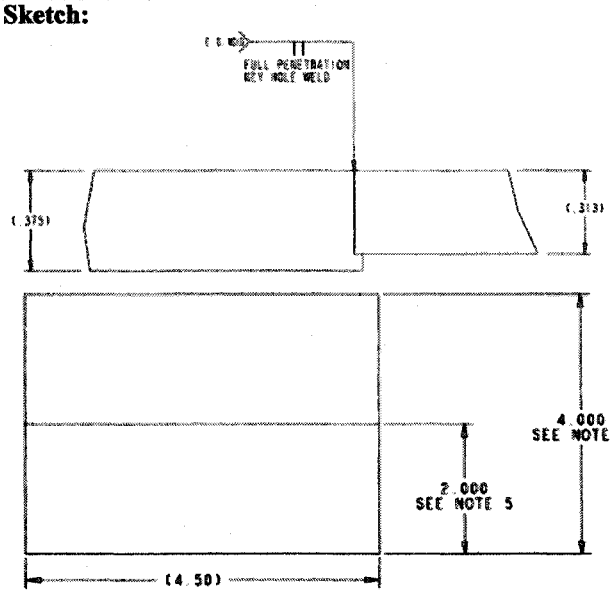

Penetration Requirements:	%	Depth (Inches)	Length
Spot Tack Weld	N/A	N/A	N/A
Stitch Tack Weld	N/A	N/A	
Seal Weld	N/A	N/A	N/A
Weld	100%	.313	N/A
Cosmetic Weld	N/A	N/A	N/A

Weld Type	Beam KV	Beam MA	Frequency Hz	Amplitude (X / Y)	Spot Size Inches	Welding Speed IN / MIN	Welding Speed SEC / REV	Defocus	Gun to work Distance
Tack Weld	100	3	N/A	X= N/A Y= N/A	X= N/A Y= N/A	15	N/A	+2	11
Seal Weld	100	9	N/A	X= N/A Y= N/A	X= N/A Y= N/A	15	N/A	+2	11
Weld	100	21	N/A	X= N/A Y= N/A	X= N/A Y= N/A	15	N/A	+2	11
Cosmetic Weld				X= Y=	X= Y=				

Comments: "No fit up gap, No filler material and No Pre-heat of parts required" Surface was for the most part Consistent bead with a positive crown. Under bead was rough showing full pen.

Certified Test Report

LABORATORY TESTING INC.
2331 Topaz Drive, Hatfield, PA 19440
Phone: 800-219-9095 ◆ Fax: 800-219-9096

BNL001-09-05-15980-9

Accredited Nadcap™
Materials Testing Laboratory
Nondestructive Testing

SOLD TO
Brookhaven National Laboratory
Collider-Accelerator Dept.
Building 911A
Upton, NY 11973-5000

SHIP TO
Brookhaven National Laboratory
Collider-Accelerator Dept.
Building 911A
Upton, NY 11973-5000
ATTN: G. T. McIntyre

CUSTOMER P.O.	CERTIFICATION DATE	SHIP VIA
BNL-0000148742	6/18/2009	EMAIL & UPS

DESCRIPTION

Quantity:	1
Size:	4" x 4 1/2"
PO Line Item No.:	1 & 2
Drawing No.:	1242T00 111
Weld Type:	Butt
Weld Thicknesses:	0.375 / 0.313
Weld Angle from Norm:	N/A
Material Types:	NbTi / NbTi
PQR No. (AES-Seq. No):	AES- EGUN-254
Material:	Niobium

TENSILE TEST:

APPLICABLE SPECIFICATIONS: **ASME BPVC, SECTION IX, 2007 EDITION, 2008a ADDENDA**

	Specimen #1	Specimen #2	Specimen #3
Size (Inches)	0.2484 x 0.3176	0.2479 x 0.3226	0.2473 x 0.3187
Area (Square Inches)	0.0789	0.0800	0.0788
Tensile Load (Pounds)	4,895.00	4,945.00	5,125.00
Tensile Strength (KSI)	62.0	62.0	65.0
Yield Load (.2%) (Pounds)	4,518.46	4,535.00	4,700.00
Yield Strength (.2%) (KSI)	57.5	56.5	59.5
Elongation (In 2") (%)	32	32	35
Failure Location	Base Metal-11	Base Metal-11	Base Metal-11
Mode of Fracture	Ductile	Ductile	Ductile

LABORATORY TESTING INC.
2331 Topaz Drive, Hatfield, PA 19440
Phone: 800-219-9095 • Fax: 800-219-9096

Certified Test Report

BNL001-09-05-15980-9

Accredited Nadcap™
Materials Testing Laboratory
Nondestructive Testing

A Macro Examination was performed on (2) pieces of the submitted Test Specimens in accordance with Customer Instructions with the following results:

ACTUAL: The samples were sectioned, ground, and etched in accordance with LTI Procedure Numbers 90-MACRO-1, Rev. 2, Dated 11/2/06 and 90-MICRO-1, Rev. 6, Dated 6/18/01.

Representative photographs revealed that the general macrostructure of the materials exhibited no evidence of cracking, excessive amounts of inclusions or significant porosity as shown in Figures 17 and 18.

The services performed above were done in accordance with LTI's Quality System Program Manual Revision 18 dated 7/27/07 and ISO/IEC 17025. These results relate only to the items tested and this report shall not be reproduced, except in full, without the written approval of Laboratory Testing, Inc. L.T.I. is accredited by PRI to ISO17025 and by Nadcap for NDT and Materials Testing for the test methods and specific services as listed in the Scopes of Accreditation available at www.labtesting.com and www.eAuditNet.com. The results reported on this test report represent the actual attributes of the material tested and indicate full compliance with all applicable specification and contract requirements.

MERCURY CONTAMINATION: During the testing and inspection, the product did not come in direct contact with mercury or any of its compounds nor with any mercury containing devices employing a single boundary of containment.

NOTE: The recording of false, fictitious or fraudulent statements or entries on this document may be punishable as a felony under Federal Statutes.

Sherri L. Scheifele
QA Specialist

Sherri L Scheifele

By: _____
Authorized Signature

LABORATORY TESTING INC.
2331 Topaz Drive, Hatfield, PA 19440
Phone: 800-219-9095 • Fax: 800-219-9096

Certified Test Report

BNL001-09-05-15980-9

Accredited Nadcap™
Materials Testing Laboratory
Nondestructive Testing

PHOTOGRAPHIC SUBMITTAL

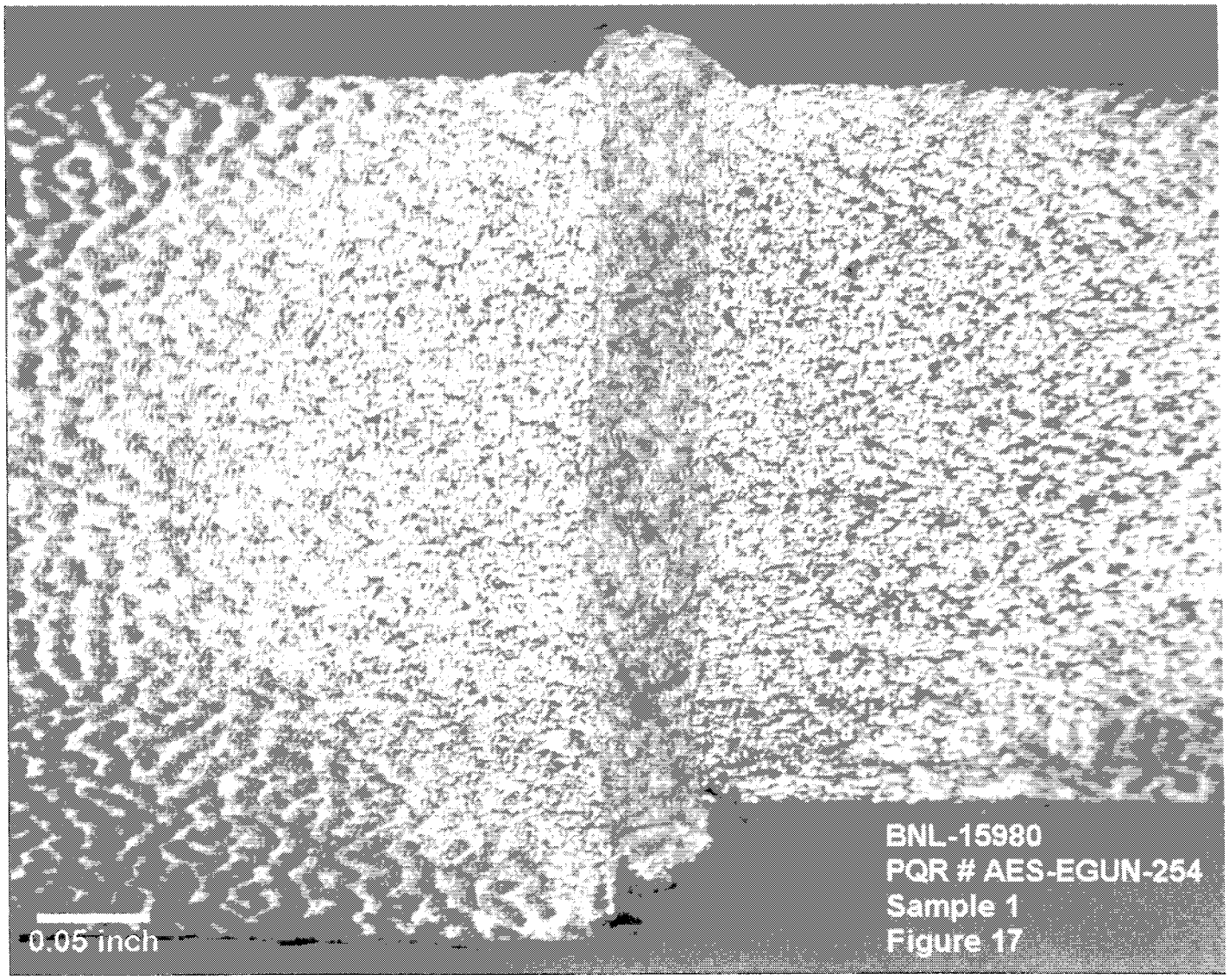

FIGURE 17

LABORATORY TESTING INC.
2331 Topaz Drive, Hatfield, PA 19440
Phone: 800-219-9095 • Fax: 800-219-9096

Certified Test Report

BNL001-09-05-15980-9

Accredited Nadcap™
Materials Testing Laboratory
Nondestructive Testing

PHOTOGRAPHIC SUBMITTAL

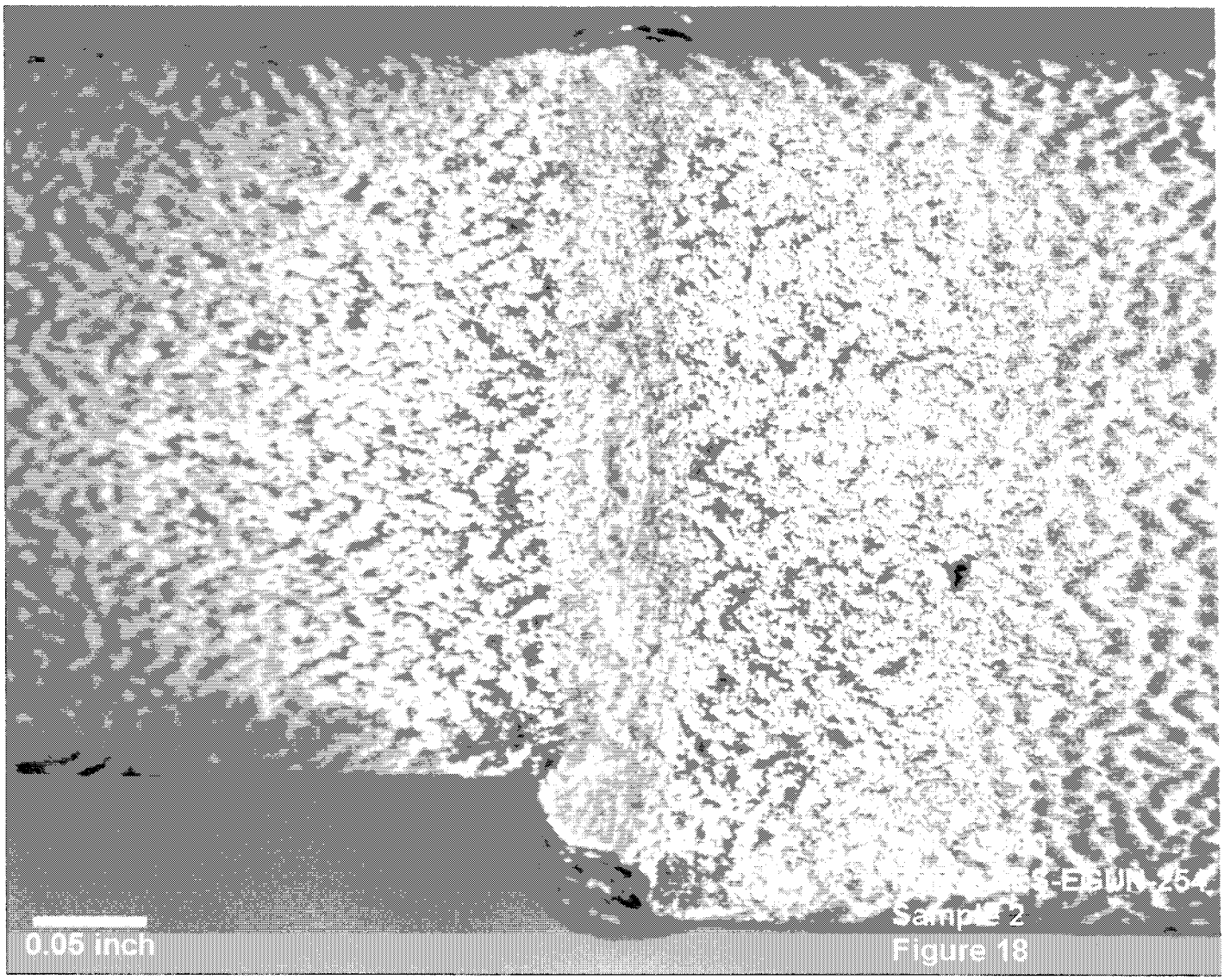

FIGURE 18

Electron Beam Welding Data Sheet

WO/ST No.: 001620	Seq. No. 246-1
Operation No.: 5 & 6	Sheet 1 of 2

Customer: Brookhaven National Lab.	Vendor used for welding: Advanced Energy Systems, Inc.
Date: 3/4/2009 | Charge Number: GC1292	Machine Type: Electron Beam Welder
Program Number: O345	Machine Serial Number:636
Part Name: Bend Specimen	Gun Type: BK 1.4 mm fil. V-style ribbon
Part Number:1292G000117-5 | Rev. A | Qty. 1	Operator: Ted Matos
Serial Number: N/A	**Weld Description**
Sketch: op #1	Specification Number: WPS-N-1-08
	Material 1: Niobium .157
	Material 2: Niobium .157
	Weld Type: Keyhole weld
	Joint Type: Interlocking Butt
	Joint Thickness: .157
	Tooling
	Fixture Type: test piece holder
	Fixture Angle: o degrees
	Weld Cycle Data
	Vacuum Level: 2.0 x 10 -5
	Ramp Up: N/A
	Over Lap: N/A
	Fade Out: N/A
	Cool down time in vacuum: 60 MIN.
	Back fill time to 20 Torr: 22 min
	Cool down time at 20 Torr: 15 min
	Temperature at atmosphere: 88.0

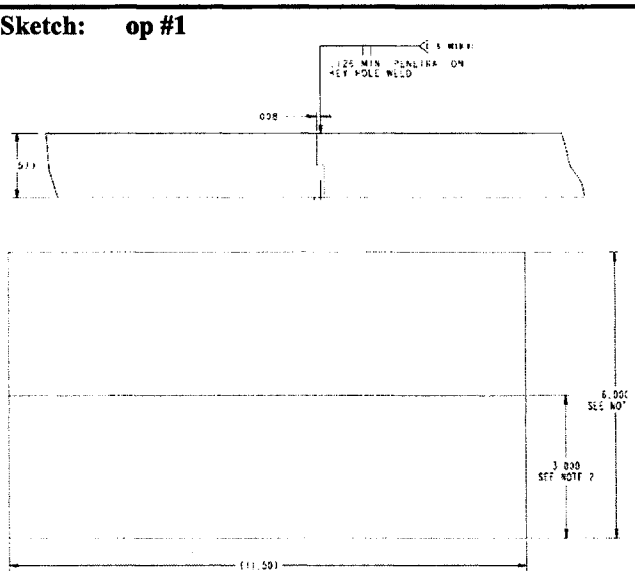

Penetration Requirements:	%	Depth (Inches)	Length
Spot Tack Weld			N/A
Stitch Tack Weld			
Seal Weld			N/A
Weld	80	.134(min.)	N/A
Cosmetic Weld			N/A

Weld Type	Beam KV	Beam MA	Frequency Hz	Amplitude (X / Y)	Spot Size Inches	Welding Speed IN / MIN	Welding Speed SEC / REV	Defocus	Gun to work Distance
Tack Weld	100	7	1000	X=2.5 Y=2.5	X=.034 Y=.034	18	N/A	-1/2"	11"
Weld Pass	100	23	1000	X=2.5 Y=2.5	X= .034 Y= .034	18	N/A	-1/2" (570)	11"
"R F" Pass	N/A	N/A	N/A	X=N/A Y=N/A	X= N/A Y= N/A	N/A	N/A	N/A	N/A
				X= Y=	X= Y=				

Comments: Visual inspection good.
On back side. Z=7.8720

Electron Beam Welding Data Sheet

WO/ST No.: 001620	Seq. No. 246-2
Operation No.: 5 & 6	Sheet 2 of 2

Customer: Brookhaven National Lab.	Vendor used for welding: Advanced Energy Systems, Inc.
Date: 3/4/2009 / Charge Number: GC1292	Machine Type: Electron Beam Welder
Program Number: O345	Machine Serial Number:636
Part Name: Bend Specimen	Gun Type: BK 1.4 mm fil. V-style ribbon
Part Number:1292G000117-5 / Rev. A / Qty. 1	Operator: Ted Matos
Serial Number: N/A	**Weld Description**
Sketch: op# 2	Specification Number: WPS-N-1-08
	Material 1:Niobium .157
	Material 2: Niobium .157
	Weld Type: Keyhole weld
	Joint Type: interlocking angular
	Joint Thickness: .157
	Tooling
	Fixture Type: test piece holder
	Fixture Angle: 9. 0degree
	Weld Cycle Data
	Vacuum Level:
	Ramp Up: N/A
	Over Lap: N/A
	Fade Out: N/A
	Cool down time in vacuum: 60 min
	Back fill time to 20 Torr: N/A
	Cool down time at 20 Torr: Left under vac.
	Temperature at atmosphere: overnight

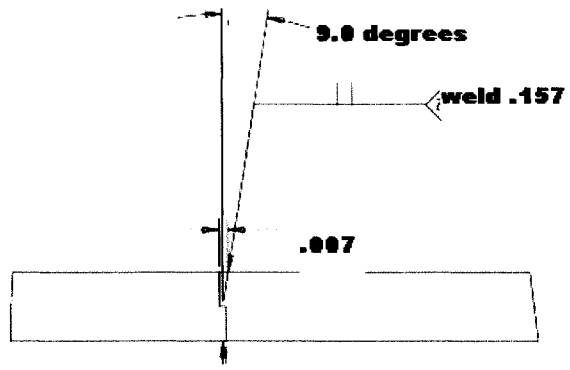

Penetration Requirements:	%	Depth (Inches)	Length
Spot Tack Weld			N/A
Stitch Tack Weld			
Seal Weld			N/A
Weld	20	.034(min.)	N/A
Cosmetic Weld			N/A

Weld Type	Beam KV	Beam MA	Frequency Hz	Amplitude (X / Y)	Spot Size Inches	Welding Speed IN / MIN	Welding Speed SEC / REV	Defocus	Gun to work Distance
Tack Weld	N/A	N/A	N/A	N/A N/A	N/A N/A	N/A	N/A	N/A	N/A
Weld Pass	N/A	N/A	N/A	X=N/A Y=N/A	X= N/A Y= N/A	N/A	N/A	N/A	N/A
"R F" Pass	100	24	1000	X=3.5 Y=3.5	X= .040 Y=.040	18	N/A	+4 (610)	11
				X= Y=	X= Y=				

Comments: Visual inspection good
Bend Z= 7.220.

Certified Test Report

LABORATORY TESTING INC.
2331 Topaz Drive, Hatfield, PA 19440
Phone: 800-219-9095 ◆ Fax: 800-219-9096

BNL001-09-05-15980-11

Accredited Nadcap™
Materials Testing Laboratory
Nondestructive Testing

SOLD TO
Brookhaven National Laboratory
Collider-Accelerator Dept.
Building 911A
Upton, NY 11973-5000

SHIP TO
Brookhaven National Laboratory
Collider-Accelerator Dept.
Building 911A
Upton, NY 11973-5000
ATTN: G. T. McIntyre

CUSTOMER P.O.	CERTIFICATION DATE	SHIP VIA
BNL-0000148742	6/18/2009	EMAIL & UPS

DESCRIPTION

Quantity:	1
Size:	6 1/8" x 11 1/2"
PO Line Item No.:	3 & 4
Drawing No.:	1242T00 117
Weld Type:	Interlocking Butt
Weld Thicknesses:	0.157 / 0.157
Weld Angle from Norm:	N/A
Material Types:	RRR / RRR
PQR No. (AES-Seq. No):	AES- EGUN-246
Material:	Niobium

BEND TEST:
APPLICABLE SPECIFICATIONS: ASME BPVC, SECTION IX, 2007 EDITION, 2008a ADDENDA

Bend Type	**ROOT 1**	**ROOT 2**	**ROOT 3**
Specimen Thickness (Inches)	.157	.157	.157
Bend Through (Degrees)	180	180	180
Pin Diameter (Inches)	.628	.628	.628
Bend Test Results	Satisfactory	Satisfactory	Ssatisfactory

BEND TEST:
APPLICABLE SPECIFICATIONS: ASME BPVC, SECTION IX, 2007 EDITION, 2008a ADDENDA

Bend Type	**FACE 1**	**FACE 2**	**FACE 3**
Specimen Thickness (Inches)	.157	.157	.157
Bend Through (Degrees)	180	180	180
Pin Diameter (Inches)	.628	.628	.628
Bend Test Results	Satisfactory	Satisfactory	Satisfactory

The services performed above were done in accordance with LTI's Quality System Program Manual Revision 18 dated 7/27/07 and ISO/IEC 17025. These results relate only to the items tested and this report shall not be reproduced, except in full, without the written approval of Laboratory Testing, Inc. L.T.I. is accredited by PRI to ISO17025 and by Nadcap for NDT and Materials Testing for the test methods and specific services as listed in the Scopes of Accreditation available at www.labtesting.com and www.eAuditNet.com. The results reported on this test report represent the actual attributes of the material tested and indicate full compliance with all applicable specification and contract requirements.

MERCURY CONTAMINATION: During the testing and inspection, the product did not come in direct contact with mercury or any of its compounds nor with any mercury containing devices employing a single boundary of containment.

NOTE: The recording of false, fictitious or fraudulent statements or entries on this document may be punishable as a felony under Federal Statutes.

Sherri L. Scheifele
QA Specialist

Sherri L Scheifele

By: _____
Authorized Signature

Electron Beam Welding Data Sheet

WO/ST No.: 001621	Seq. No.243-1
Operation No.: 5&6	Sheet 1 of 2

Customer: Brookhaven National Lab.		
Date: 2/23/2009	Charge Number: GC1292	
Program Number: O345		
Part Name: Guide Bend Specimen		
Part Number:1292G000118-5	Rev. A	Qty. 1
Serial Number: N/A		

Sketch: 19.5 degrees

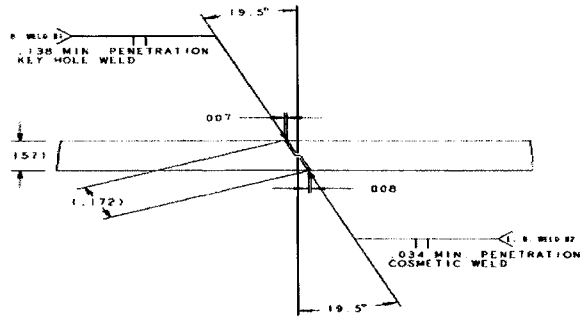

Vendor used for welding: Advanced Energy Systems, Inc.
Machine Type: Electron Beam Welder
Machine Serial Number:636
Gun Type: BK 1.4 mm fil. V-style ribbon
Operator: Ted Matos
Weld Description
Specification Number: WPS-N-1-08
Material 1: Niobium .157
Material 2:Niobium .157
Weld Type: Keyhole weld
Joint Type: Interlocking angular
Joint Thickness: .172
Tooling
Fixture Type: test piece holder
Fixture Angle: 19. 5 degree
Weld Cycle Data
Vacuum Level: 3.0 x10 -5
Ramp Up: N/A
Over Lap: N/A
Fade Out: N/A
Cool down time in vacuum: 30 min.
Back fill time to 20 Torr: 22 min.
Cool down time at 20 Torr: 15 min.
Temperature at atmosphere: 95.0

Penetration Requirements:	%	Depth (Inches)	Length
Spot Tack Weld			N/A
Stitch Tack Weld			
Seal Weld			N/A
Weld	80	.138(min.)	N/A
Cosmetic Weld			N/A

Weld Type	Beam KV	Beam MA	Frequency Hz	Amplitude (X / Y)	Spot Size Inches	Welding Speed IN / MIN	Welding Speed SEC / REV	Defocus	Gun to work Distance
Tack Weld	100	7	1000	X=2.5	.034	18	N/A	-1/2"	11"
				Y=2.5	.034				
Weld Pass	100	25	1000	X=2.5	X= .034	18	N/A	-1/2 " (570)	11
				Y=2.5	Y= .034				
Cosmetic pass	N/A	N/A	N/A	N/A	N/A	N/A	N/A	N/A	N/A
				N/A	N/A				
				X=	X=				
				Y=	Y=				

Comments: "No fit up gap, No filler material and No Pre-heat of parts required" Visual inspection of both welds Were good.

Electron Beam Welding Data Sheet

WO/ST No.: 001621	Seq. No.243-2
Operation No.: 5&6	Sheet 2 of 2

Customer: Brookhaven National Lab.	Vendor used for welding: Advanced Energy Systems, Inc.
Date: 2/23/2009 | Charge Number: GC1292	Machine Type: Electron Beam Welder
Program Number: O345	Machine Serial Number:636
Part Name: Guide Bend Specimen	Gun Type: BK 1.4 mm fil. V-style ribbon
Part Number:1292G000118-5 | Rev. A | Qty. 1	Operator: Ted Matos
Serial Number: N/A	**Weld Description**
Sketch: 19.5 degrees	Specification Number: WPS-N-1-08
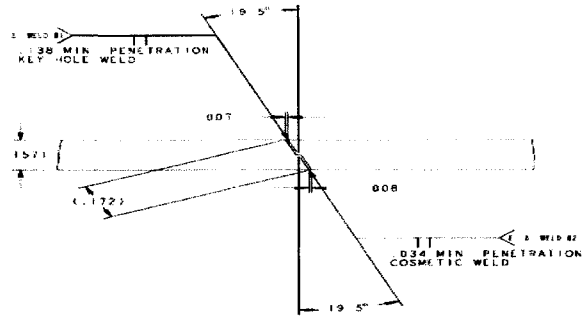	Material 1: Niobium .157
	Material 2: Niobium .157
	Weld Type: Keyhole weld
	Joint Type: Interlocking angular
	Joint Thickness: .034 min
	Tooling
	Fixture Type: test piece holder
	Fixture Angle: 19. 5 degree
	Weld Cycle Data
	Vacuum Level: 3.0 x10 -5
	Ramp Up: N/A
	Over Lap: N/A
	Fade Out: N/A
	Cool down time in vacuum: 30 min.
	Back fill time to 20 Torr: 22 min.
	Cool down time at 20 Torr: 15 min.
	Temperature at atmosphere: 95.0

Penetration Requirements:	%	Depth (Inches)	Length
Spot Tack Weld			N/A
Stitch Tack Weld			
Seal Weld			N/A
Weld	20	.034(min.)	N/A
Cosmetic Weld			N/A

Weld Type	Beam KV	Beam MA	Frequency Hz	Amplitude (X / Y)	Spot Size Inches	Welding Speed IN / MIN	Welding Speed SEC / REV	Defocus	Gun to work Distance
Tack Weld	N/A	N/A	N/A	N/A N/A	N/A N/A	N/A	N/A	N/A	N/A
Weld Pass	N/A	N/A	N/A	N/A N/A	N/A N/A	N/A	N/A	N/A	N/A
"R F" Pass(back	100	25	100	X=3.5 Y=3.5	X=.040 Y=.040	N/A	N/A	N/A	N/A
				X= Y=	X= Y=				

Comments: "No fit up gap, No filler material and No Pre-heat of parts required" Visual inspection of both welds Were good.

Certified Test Report

LABORATORY TESTING INC.
2331 Topaz Drive, Hatfield, PA 19440
Phone: 800-219-9095 • Fax: 800-219-9096

BNL001-09-05-15980-12

Accredited Nadcap™ Materials Testing Laboratory Nondestructive Testing

SOLD TO
Brookhaven National Laboratory
Collider-Accelerator Dept.
Building 911A
Upton, NY 11973-5000

SHIP TO
Brookhaven National Laboratory
Collider-Accelerator Dept.
Building 911A
Upton, NY 11973-5000
ATTN: G. T. McIntyre

CUSTOMER P.O.
BNL-0000148742

CERTIFICATION DATE
6/18/2009

SHIP VIA
EMAIL & UPS

DESCRIPTION

Quantity:	1
Size:	6 1/8" x 11 1/2"
PO Line Item No.:	3 & 4
Drawing No.:	1242T00 118
Weld Type:	Angle Interlocking Butt
Weld Thicknesses:	0.157 / 0.157
Weld Angle from Norm:	19.5 Degrees
Material Types:	RRR / RRR
PQR No. (AES-Seq. No):	AES- EGUN-243
Material:	Niobium

BEND TEST:
APPLICABLE SPECIFICATIONS: ASME BPVC, SECTION IX, 2007 EDITION, 2008a ADDENDA

Bend Type	**ROOT 1**	**ROOT 2**	**ROOT 3**
Specimen Thickness (Inches)	.157	.157	.157
Bend Through (Degrees)	180	180	180
Pin Diameter (Inches)	.628	.628	.628
Bend Test Results	Satisfactory	Satisfactory	Satisfactory

BEND TEST:
APPLICABLE SPECIFICATIONS: ASME BPVC, SECTION IX, 2007 EDITION, 2008a ADDENDA

Bend Type	**FACE 1**	**FACE 2**	**FACE 3**
Specimen Thickness (Inches)	.157	.157	.157
Bend Through (Degrees)	180	180	180
Pin Diameter (Inches)	.628	.628	.628
Bend Test Results	Satisfactory	Satisfactory	Satisfactory

The services performed above were done in accordance with LTI's Quality System Program Manual Revision 18 dated 7/27/07 and ISO/IEC 17025. These results relate only to the items tested and this report shall not be reproduced, except in full, without the written approval of Laboratory Testing, Inc. L.T.I. is accredited by PRI to ISO17025 and by Nadcap for NDT and Materials Testing for the test methods and specific services as listed in the Scopes of Accreditation available at www.labtesting.com and www.eAuditNet.com. The results reported on this test report represent the actual attributes of the material tested and indicate full compliance with all applicable specification and contract requirements.

MERCURY CONTAMINATION: During the testing and inspection, the product did not come in direct contact with mercury or any of its compounds nor with any mercury containing devices employing a single boundary of containment.

NOTE: The recording of false, fictitious or fraudulent statements or entries on this document may be punishable as a felony under Federal Statutes.

Sherri L. Scheifele
QA Specialist

Sherri L Scheifele

By: _____
Authorized Signature

Electron Beam Welding Data Sheet

WO/ST No.: 001624	Seq. No. 252
Operation No.: 5 & 6	Sheet 1 of 1

Customer: Brookhaven National Lab.		
Date:4/7/2007	Charge Number: GC1292-001	
Program Number: 0346		
Part Name: Bend test Specimen		
Part Number:1242T00120-5	Rev. A	Qty. 1
Serial Number: N/A		

Sketch:

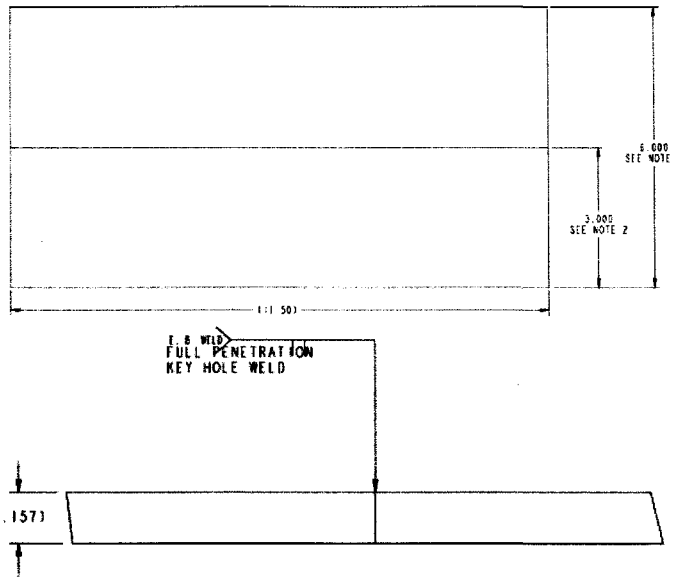

Vendor used for welding: Advanced Energy Systems, Inc.
Machine Type: Electron Beam Welder
Machine Serial Number: 636
Gun Type: BK1.4: 1.4 mm FILA. V-STYLE
Operator: Ted Matos
Weld Description
Specification Number: WPS-N-1-08
Material 1: Nb55Ti .157x3.125x11.5
Material 2: Nb55Ti .157x3.125x11.5
Weld Type: Keyhole weld full penetration
Joint Type: Butt
Joint Thickness:.157
Tooling
Fixture Type: holding plate
Fixture Angle: 0 degrees
Weld Cycle Data
Vacuum Level: 3.0 x10 -5
Ramp Up: n/a
Over Lap: n/a
Fade Out: n/a
Cool down time in vacuum: 20 min
Back fill time to 20 Torr: n/a
Cool down time at 20 Torr: n/a
Temperature at atmosphere:

Penetration Requirements:	%	Depth (Inches)	Length
Spot Tack Weld			N/A
Stitch Tack Weld			
Seal Weld			N/A
Weld	100%	.157	N/A
Cosmetic Weld			N/A

Weld Type	Beam KV	Beam MA	Frequency Hz	Amplitude (X / Y)	Spot Size Inches	Welding Speed IN / MIN	Welding Speed SEC / REV	Defocus	Gun to work Distance
Tack Weld	100	3	1000	X=6.0 Y=6.0	X=.06 Y= .06	30"	n/a	-1"	11"
Seal Weld	100	16	1000	X=6.0 Y=6.0	X= .06 Y= .06	30"	n/a	-1"	11"
Weld				X= Y=	X= Y=				
Cosmetic Weld				X= Y=	X= Y=				

Comments: "No fit up gap, No filler material and No Pre-heat of parts required" Surface of weld rough and Under bead looks pulsating and crowning.

Certified Test Report

LABORATORY TESTING INC.
2331 Topaz Drive, Hatfield, PA 19440
Phone: 800-219-9095 • Fax: 800-219-9096

BNL001-09-05-15980-13

Accredited Nadcap™ Materials Testing Laboratory Nondestructive Testing

SOLD TO
Brookhaven National Laboratory
Collider-Accelerator Dept.
Building 911A
Upton, NY 11973-5000

SHIP TO
Brookhaven National Laboratory
Collider-Accelerator Dept.
Building 911A
Upton, NY 11973-5000
ATTN: G. T. McIntyre

CUSTOMER P.O.	CERTIFICATION DATE	SHIP VIA
BNL-0000148742	6/18/2009	EMAIL & UPS

DESCRIPTION

Quantity:	1
Size:	6 1/8" x 11 1/2"
PO Line Item No.:	3 & 4
Drawing No.:	1242T00 120
Weld Type:	Butt
Weld Thicknesses:	0.375 / 0.313
Weld Angle from Norm:	N/A
Material Types:	NbTi / NbTi
PQR No. (AES-Seq. No):	AES- EGUN-252
Material:	Niobium

BEND TEST:
APPLICABLE SPECIFICATIONS: ASME BPVC, SECTION IX, 2007 EDITION, 2008a ADDENDA

Bend Type	**ROOT 1**	**ROOT 2**	**ROOT 3**
Specimen Thickness (Inches)	.157	.157	.157
Bend Through (Degrees)	180	180	180
Pin Diameter (Inches)	.628	.628	.628
Bend Test Results	Satisfactory	Satisfactory	Satisfactory

BEND TEST:
APPLICABLE SPECIFICATIONS: ASME BPVC, SECTION IX, 2007 EDITION, 2008a ADDENDA

Bend Type	**FACE 1**	**FACE 2**	**FACE 3**
Specimen Thickness (Inches)	.157	.157	.157
Bend Through (Degrees)	180	180	180
Pin Diameter (Inches)	.628	.628	.628
Bend Test Results	Satisfactory	Satisfactory	Satisfactory

The services performed above were done in accordance with LTI's Quality System Program Manual Revision 18 dated 7/27/07 and ISO/IEC 17025. These results relate only to the items tested and this report shall not be reproduced, except in full, without the written approval of Laboratory Testing, Inc. L.T.I. is accredited by PRI to ISO17025 and by Nadcap for NDT and Materials Testing for the test methods and specific services as listed in the Scopes of Accreditation available at www.labtesting.com and www.eAuditNet.com. The results reported on this test report represent the actual attributes of the material tested and indicate full compliance with all applicable specification and contract requirements.

MERCURY CONTAMINATION: During the testing and inspection, the product did not come in direct contact with mercury or any of its compounds nor with any mercury containing devices employing a single boundary of containment.

NOTE: The recording of false, fictitious or fraudulent statements or entries on this document may be punishable as a felony under Federal Statutes.

Sherri L. Scheifele
QA Specialist

Sherri L Scheifele

By: _____
Authorized Signature

Electron Beam Welding Data Sheet

WO/ST No.: 001622	Seq. No.235
Operation No.: 6&7	Sheet 1 of 1

Customer: Brookhaven National Lab.	Vendor used for welding: Advanced Energy Systems, Inc.
Date: 2/6/2009 | Charge Number:GC1292-001	Machine Type: Electron Beam
Program Number: O0346	Machine Serial Number: 636
Part Name: Bend test specimen	Gun Type: BK 1.4 mm fil. V-Style Ribbon
Part Number:1242T00127-5 | Rev.N/A | Qty. 1	Operator: Ted Matos
Serial Number: N/A	**Weld Description**
Sketch:	Specification Number: WPS-N-1-08
	Material 1: Niobium .070
	Material 2: Niobium .070
	Weld Type: liner Full pen. smooth under bend
	Joint Type: Interlocking
	Joint Thickness: .070
	Tooling
	Fixture Type: test piece holder
	Fixture Angle: 0 degree
	Weld Cycle Data
	Vacuum Level: 2.2 x 10 -5
	Ramp Up: N/A
	Over Lap: N/A
	Fade Out: N/A
	Cool down time in vacuum: 30 min.
	Back fill time to 20 Torr: 22 min
	Cool down time at 20 Torr: 15 min
	Temperature at atmosphere: 93.0 degrees

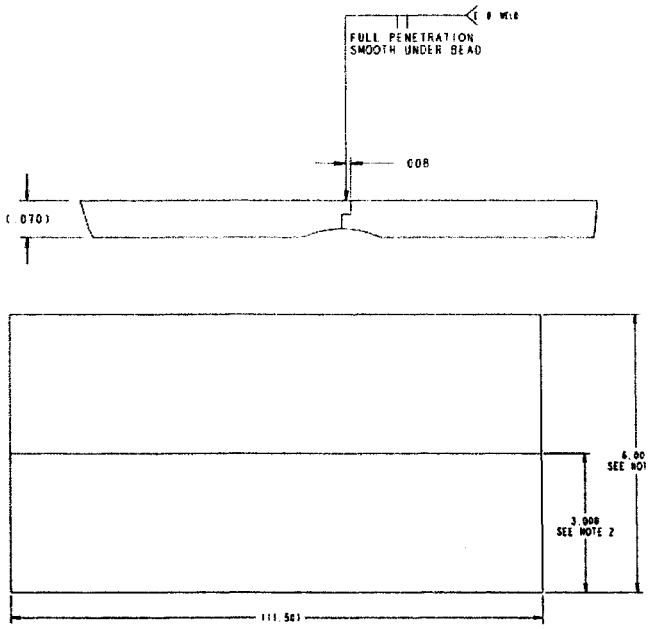

Penetration Requirements:	%	Depth (Inches)	Length
Spot Tack Weld			N/A
Stitch Tack Weld			
Seal Weld			N/A
Weld	100	.070	N/A
Cosmetic Weld			N/A

Weld Type	Beam kV	Beam mA	Frequency Hz	Amplitude (X / Y)	Spot Size Inches	Welding Speed IN / MIN	Welding Speed SEC / REV	Defocus	Gun to work Distance
Tack Weld	100	7	1000	X=6.5 Y=6.5	X=.075 Y=.075	18	N/A	-4	11
Seal Weld	100	10	1000	X=6.5 Y=6.5	X=.075 Y=.075	18	N/A	-4	11 (550)
Weld	100	17	1000	X=6.5 Y=6.5	X= .075 Y=.075	18	N/A	-4	
Cosmetic Weld				X= Y=	X= Y=				

Comments: "No fit up gap, No filler material and No Pre-heat of parts required" visual inspection was good.

Certified Test Report

LABORATORY TESTING INC.
2331 Topaz Drive, Hatfield, PA 19440
Phone: 800-219-9095 • Fax: 800-219-9096

BNL001-09-05-15980-19

Accredited Nadcap™
Materials Testing Laboratory
Nondestructive Testing

SOLD TO
Brookhaven National Laboratory
Collider-Accelerator Dept.
Building 911A
Upton, NY 11973-5000

SHIP TO
Brookhaven National Laboratory
Collider-Accelerator Dept.
Building 911A
Upton, NY 11973-5000
ATTN: G. T. McIntyre

CUSTOMER P.O.	CERTIFICATION DATE	SHIP VIA
BNL-0000148742	6/18/2009	EMAIL & UPS

DESCRIPTION

Quantity:	1
Size:	6 1/8" x 11 1/2"
PO Line Item No.:	3 & 4
Drawing No.:	1242T00 127
Weld Type:	Interlocking Butt
Weld Thicknesses:	0.070 / 0.070
Weld Angle from Norm:	N/A
Material Types:	RRR / RRR
PQR No. (AES-Seq. No):	AES- EGUN-235
Material:	Niobium

BEND TEST:
APPLICABLE SPECIFICATIONS: ASME BPVC SECTION IX, 2007 EDITION, 2008a ADDENDA

Bend Type	ROOT 1	ROOT 2	ROOT 3
Specimen Thickness (Inches)	.070	.070	.070
Bend Through (Degrees)	180	180	180
Pin Diameter (Inches)	.280	.280	.280
Bend Test Results	Satisfactory	Satisfactory	Satisfactory

BEND TEST:
APPLICABLE SPECIFICATIONS: ASME BPVC SECTION IX, 2007 EDITION, 2008a ADDENDA

Bend Type	FACE 1	FACE 2	FACE 3
Specimen Thickness (Inches)	.070	.070	.070
Bend Through (Degrees)	180	180	180
Pin Diameter (Inches)	.280	.280	.280
Bend Test Results	Satisfactory	Satisfactory	Satisfactory

The services performed above were done in accordance with LTI's Quality System Program Manual Revision 18 dated 7/27/07 and ISO/IEC 17025. These results relate only to the items tested and this report shall not be reproduced, except in full, without the written approval of Laboratory Testing, Inc. L.T.I. is accredited by PRI to ISO17025 and by Nadcap for NDT and Materials Testing for the test methods and specific services as listed in the Scopes of Accreditation available at www.labtesting.com and www.eAuditNet.com. The results reported on this test report represent the actual attributes of the material tested and indicate full compliance with all applicable specification and contract requirements.

MERCURY CONTAMINATION: During the testing and inspection, the product did not come in direct contact with mercury or any of its compounds nor with any mercury containing devices employing a single boundary of containment.

NOTE: The recording of false, fictitious or fraudulent statements or entries on this document may be punishable as a felony under Federal Statutes.

Sherri L. Scheifele
QA Specialist

Sherri L Scheifele

By: _____
Authorized Signature

Electron Beam Welding Data Sheet

WO/ST No.: 001623	Seq. No. 237
Operation No.: 5 &6	Sheet 1 of 1

Customer: Brookhaven National Lab.	Vendor used for welding: Advanced Energy Systems, Inc.
Date: 2/10/2009 | Charge Number: 1292GC00102	Machine Type: Electron Beam welder
Program Number: O346	Machine Serial Number: 636
Part Name: Bend Test Specimen	Gun Type: BK 1.4 mm fil. V-Style Ribbon
Part Number:1242T00128-5 | Rev. A | Qty. 1	Operator: Ted Matos
Serial Number: N/A	**Weld Description**
Sketch: 13 ° degree angle	Specification Number: WPS-N-1_08
	Material 1: niobium .118 thick
	Material 2: niobium.118 thick
	Weld Type: Full pen. with cosmetic pass
	Joint Type: interlock
	Joint Thickness: .121
	Tooling
	Fixture Type: test piece holder
	Fixture Angle: 13 degree
	Weld Cycle Data
	Vacuum Level: 2.4 x 10-5
	Ramp Up: N/A
	Over Lap: N/A
	Fade Out: N/A
	Cool down time in vacuum: 30 min
	Back fill time to 20 Torr: 22 min.
	Cool down time at 20 Torr: 15 min.
	Temperature at atmosphere: 99.0

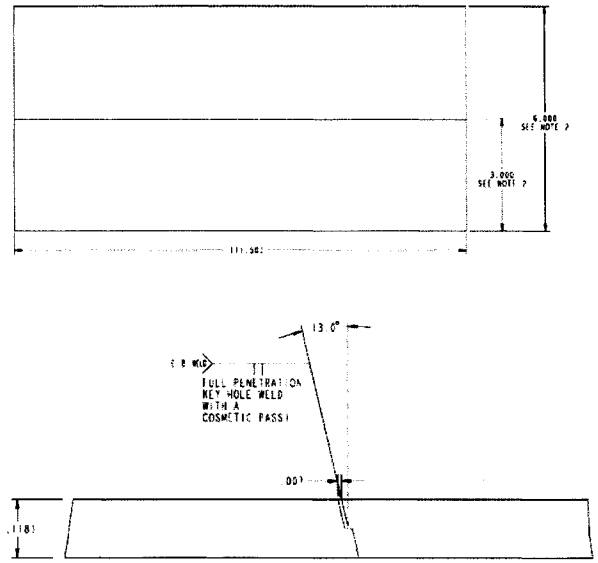

Penetration Requirements:	%	Depth (Inches)	Length
Spot Tack Weld			N/A
Stitch Tack Weld			
Seal Weld			N/A
Weld	100	.121	N/A
Cosmetic Weld			N/A

Weld Type	Beam kV	Beam mA	Frequency Hz	Amplitude (X / Y)	Spot Size Inches	Welding Speed IN / MIN	Welding Speed SEC / REV	Defocus	Gun to work Distance
Tack Weld	100	7	1000	X=.3 Y=.3	X=.009 Y=.009	18	N/A	-1/2"	11
Weld Pass	100	18	1000	X=.3 Y=.3	X=.009 Y=.009	18	N/A	-1/2 " (570)	11
Cosmetic Pass	100	18	1000	X=.3 Y=.3	X= .009 Y=.009	18	N/A	+4" (610)	11
				X= Y=	X= Y=				

Comments: Parts were weld with no .007 offset, The fade out seemed to be slightly on edge of joint. Sectioned, Etched and the whole joint was consumed by the weld.
"No fit up gap, No filler material and No Pre-heat of parts required"

Certified Test Report

LABORATORY TESTING INC.
2331 Topaz Drive, Hatfield, PA 19440
Phone: 800-219-9095 • Fax: 800-219-9096

BNL001-09-05-15980-20

Accredited Nadcap™
Materials Testing Laboratory
Nondestructive Testing

SOLD TO
Brookhaven National Laboratory
Collider-Accelerator Dept.
Building 911A
Upton, NY 11973-5000

SHIP TO
Brookhaven National Laboratory
Collider-Accelerator Dept.
Building 911A
Upton, NY 11973-5000
ATTN: G. T. McIntyre

CUSTOMER P.O.	CERTIFICATION DATE	SHIP VIA
BNL-0000148742	6/18/2009	EMAIL & UPS

DESCRIPTION

Quantity:	1
Size:	6 1/8" x 11 1/2"
PO Line Item No.:	3 & 4
Drawing No.:	1242T00 128
Weld Type:	Angle Interlocking Butt
Weld Thicknesses:	0.18 / 0.118
Weld Angle from Norm:	13 Degrees
Material Types:	RRR / RRR
PQR No. (AES-Seq. No):	AES- EGUN-237
Material:	Niobium

BEND TEST:
APPLICABLE SPECIFICATIONS: ASME BPVC SECTION IX, 2007 EDITION, 2008a ADDENDA

Bend Type	ROOT 1	ROOT 2	ROOT 3
Specimen Thickness (Inches)	.118	.118	.118
Bend Through (Degrees)	180	180	180
Pin Diameter (Inches)	.472	.472	.472
Bend Test Results	Satisfactory	Satisfactory	Satisfactory

BEND TEST:
APPLICABLE SPECIFICATIONS: ASME BPVC SECTION IX, 2007 EDITION, 2008a ADDENDA

Bend Type	FACE 1	FACE 2	FACE 3
Specimen Thickness (Inches)	.118	.118	.118
Bend Through (Degrees)	180	180	180
Pin Diameter (Inches)	.472	.472	.472
Bend Test Results	Satisfactory	Satisfactory	Satisfactory

The services performed above were done in accordance with LTI's Quality System Program Manual Revision 18 dated 7/27/07 and ISO/IEC 17025. These results relate only to the items tested and this report shall not be reproduced, except in full, without the written approval of Laboratory Testing, Inc. L.T.I. is accredited by PRI to ISO17025 and by Nadcap for NDT and Materials Testing for the test methods and specific services as listed in the Scopes of Accreditation available at www.labtesting.com and www.eAuditNet.com. The results reported on this test report represent the actual attributes of the material tested and indicate full compliance with all applicable specification and contract requirements.

MERCURY CONTAMINATION: During the testing and inspection, the product did not come in direct contact with mercury or any of its compounds nor with any mercury containing devices employing a single boundary of containment.

NOTE: The recording of false, fictitious or fraudulent statements or entries on this document may be punishable as a felony under Federal Statutes.

Sherri L. Scheifele
QA Specialist

Sherri L Scheifele

By: _____
Authorized Signature

Electron Beam Welding Data Sheet

WO/ST No.: 001833	Seq. No. 257
Operation No.: 6 & 7	Sheet 1 of 1

Customer: Brookhaven National Lab.	Vendor used for welding: Advanced Energy Systems, Inc.
Date: 3/11/2009 | Charge Number: GC1292-001	Machine Type: Electron Beam Welder
Program Number: o346	Machine Serial Number: 636
Part Name: Bend Test Specimen	Gun Type: BK1.4: 1.4 mm FILA. V-STYLE
Part Number:1242T00129-5 | Rev. B | Qty. 1	Operator: Ted Matos
Serial Number: N/A	**Weld Description**
Sketch:	Specification Number: WPS-N-1-08
	Material 1: niobium .335 thick
	Material 2: niobium .165 thick
	Weld Type: full penetration with smooth underbead
	Joint Type: angle interlocking butt
	Joint Thickness: .140
	Tooling
	Fixture Type: test plate holder
	Fixture Angle: 30 degree angle
	Weld Cycle Data
	Vacuum Level: 2.8 x 10-5
	Ramp Up: N/A
	Over Lap: N/A
	Fade Out: N/A
	Cool down time in vacuum: 40 min.
	Back fill time to 20 Torr: N/A
	Cool down time at 20 Torr: N/A
	Temperature at atmosphere: 119.0

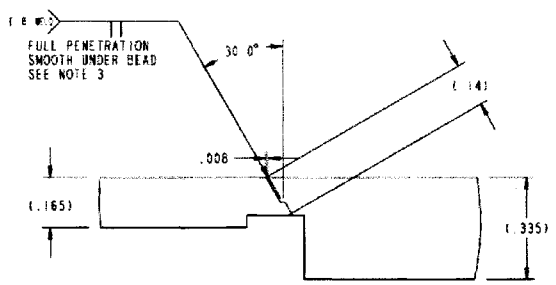

Penetration Requirements:	%	Depth (Inches)	Length
Spot Tack Weld			N/A
Stitch Tack Weld			N/A
Seal Weld			N/A
Weld	100 %	.140	N/A
Cosmetic Weld			N/A

Weld Type	Beam KV	Beam MA	Frequency Hz	Amplitude (X / Y)	Spot Size Inches	Welding Speed IN / MIN	Welding Speed SEC / REV	Defocus	Gun to work Distance
Tack Weld	100	3	1000	X=5.0 Y=5.0	X= .045 Y= .045	18	n/a	-4	11
Seal Weld	100	40	1000	X=5.0 Y=5.0	X= .045 Y= .045	18	n/a	-4	11
Weld	100	45	1000	X=5.0 Y=5.0	X= .045 Y= .045	18	n/a	-4 (555)	11
Cosmetic Weld				X= Y=	X= Y=				

Comments: "No fit up gap, No filler material and No Pre-heat of parts required" Surface had a positive crown And melt through was consistent through the whole part.

Certified Test Report

LABORATORY TESTING INC.
2331 Topaz Drive, Hatfield, PA 19440
Phone: 800-219-9095 • Fax: 800-219-9096

BNL001-09-05-15980-21

Accredited Nadcap™
Materials Testing Laboratory
Nondestructive Testing

SOLD TO
Brookhaven National Laboratory
Collider-Accelerator Dept.
Building 911A
Upton, NY 11973-5000

SHIP TO
Brookhaven National Laboratory
Collider-Accelerator Dept.
Building 911A
Upton, NY 11973-5000
ATTN: G. T. McIntyre

CUSTOMER P.O.
BNL-0000148742

CERTIFICATION DATE
6/18/2009

SHIP VIA
EMAIL & UPS

DESCRIPTION

Quantity:	1
Size:	6 1/8" x 11 1/2"
PO Line Item No.:	3 & 4
Drawing No.:	1242T00 129
Weld Type:	Angle Interlocking Butt
Weld Thicknesses:	0.165 / 0.335
Weld Angle from Norm:	30 Degrees
Material Types:	RRR / RRR
PQR No. (AES-Seq. No):	AES- EGUN-257
Material:	Niobium

BEND TEST:
APPLICABLE SPECIFICATIONS: ASME BPVC SECTION IX, 2007 EDITION, 2008a ADDENDA

Bend Type	**ROOT 1**	**ROOT 2**	**ROOT 3**
Specimen Thickness (Inches)	.165	.165	.165
Bend Through (Degrees)	180	180	180
Pin Diameter (Inches)	.660	.660	.660
Bend Test Results	Satisfactory	Satisfactory	Satisfactory

BEND TEST:
APPLICABLE SPECIFICATIONS: ASME BPVC SECTION IX, 2007 EDITION, 2008a ADDENDA

Bend Type	**FACE 1**	**FACE 2**	**FACE 3**
Specimen Thickness (Inches)	.165	.165	.165
Bend Through (Degrees)	180	180	180
Pin Diameter (Inches)	.660	.660	.660
Bend Test Results	Satisfactory	Satisfactory	Satisfactory

The services performed above were done in accordance with LTI's Quality System Program Manual Revision 18 dated 7/27/07 and ISO/IEC 17025. These results relate only to the items tested and this report shall not be reproduced, except in full, without the written approval of Laboratory Testing, Inc. L.T.I. is accredited by PRI to ISO17025 and by Nadcap for NDT and Materials Testing for the test methods and specific services as listed in the Scopes of Accreditation available at www.labtesting.com and www.eAuditNet.com. The results reported on this test report represent the actual attributes of the material tested and indicate full compliance with all applicable specification and contract requirements.

MERCURY CONTAMINATION: During the testing and inspection, the product did not come in direct contact with mercury or any of its compounds nor with any mercury containing devices employing a single boundary of containment.

NOTE: The recording of false, fictitious or fraudulent statements or entries on this document may be punishable as a felony under Federal Statutes.

Sherri L. Scheifele
QA Specialist

Sherri L Scheifele

By: _____
Authorized Signature

Certified Test Report

LABORATORY TESTING INC.
2331 Topaz Drive, Hatfield, PA 19440
Phone: 800-219-9095 • Fax: 800-219-9096

BNL001-09-05-15980-22

Accredited Nadcap™
Materials Testing Laboratory
Nondestructive Testing

SOLD TO
Brookhaven National Laboratory
Collider-Accelerator Dept.
Building 911A
Upton, NY 11973-5000

SHIP TO
Brookhaven National Laboratory
Collider-Accelerator Dept.
Building 911A
Upton, NY 11973-5000
ATTN: G. T. McIntyre

CUSTOMER P.O.
BNL-0000148742

CERTIFICATION DATE
6/18/2009

SHIP VIA
EMAIL & UPS

DESCRIPTION

Quantity:	1
Size:	6 1/8" x 11 1/2"
PO Line Item No.:	3 & 4
Drawing No.:	1242T00 130
Weld Type:	Butt
Weld Thicknesses:	0.330 / 0.330
Weld Angle from Norm:	N/A
Material Types:	RRR / NbTi
PQR No. (AES-Seq. No):	AES- EGUN-250
Material:	Niobium

BEND TEST:
APPLICABLE SPECIFICATIONS: ASME BPVC SECTION IX, 2007 EDITION, 2008a ADDENDA

Bend Type	**ROOT 1**	**ROOT 2**	**ROOT 3**
Specimen Thickness (Inches)	.330	.330	.330
Bend Through (Degrees)	180	180	180
Pin Diameter (Inches)	1.32	1.32	1.32
Bend Test Results	Satisfactory	Satisfactory	Satisfactory

BEND TEST:
APPLICABLE SPECIFICATIONS: ASME BPVC SECTION IX, 2007 EDITION, 2008a ADDENDA

Bend Type	**FACE 1**	**FACE 1**	**FACE 3**
Specimen Thickness (Inches)	.330	.330	.330
Bend Through (Degrees)	180	180	180
Pin Diameter (Inches)	1.320	1.320	1.320
Bend Test Results	Satisfactory	Satisfactory	Satisfactory

The services performed above were done in accordance with LTI's Quality System Program Manual Revision 18 dated 7/27/07 and ISO/IEC 17025. These results relate only to the items tested and this report shall not be reproduced, except in full, without the written approval of Laboratory Testing, Inc. L.T.I. is accredited by PRI to ISO17025 and by Nadcap for NDT and Materials Testing for the test methods and specific services as listed in the Scopes of Accreditation available at www.labtesting.com and www.eAuditNet.com. The results reported on this test report represent the actual attributes of the material tested and indicate full compliance with all applicable specification and contract requirements.

MERCURY CONTAMINATION: During the testing and inspection, the product did not come in direct contact with mercury or any of its compounds nor with any mercury containing devices employing a single boundary of containment.

NOTE: The recording of false, fictitious or fraudulent statements or entries on this document may be punishable as a felony under Federal Statutes.

Sherri L. Scheifele
QA Specialist

Sherri L Scheifele

By: _____
Authorized Signature

Electron Beam Welding Data Sheet

WO/ST No.: 001659	Seq. No. 250
Operation No.: 7&8	Sheet 1 of 1

Customer: Brookhaven National Lab.	Vendor used for welding: Advanced Energy Systems, Inc.
Date: 4/6/2009 — Charge Number: GC1292-001	Machine Type: Electron Beam Welder
Program Number: O346	Machine Serial Number: 636
Part Name: Bend Test Specimen	Gun Type: BK1.4: 1.4 mm FILA. V-STYLE
Part Number:1242T00130-5 — Rev. B — Qty. 1	Operator: Ted Matos
Serial Number: N/A	**Weld Description**
Sketch:	Specification Number: WPS-N-1-08
	Material 1: Nb55Ti .330x3.07x1.6 &.75&1.2
	Material 2: Nb RRR.250 .330x3.0x1.6&.75&1.2
	Weld Type: Full penetration Keyhole weld
	Joint Type: Butt
	Joint Thickness: .330
	Tooling
	Fixture Type: Holding plate
	Fixture Angle: 0
	Weld Cycle Data
	Vacuum Level: 2.8 x10 -5
	Ramp Up: n/a
	Over Lap: n/a
	Fade Out: n/a
	Cool down time in vacuum: 20 min.
	Back fill time to 20 Torr: n/a
	Cool down time at 20 Torr: n/a
	Temperature at atmosphere: 113.0

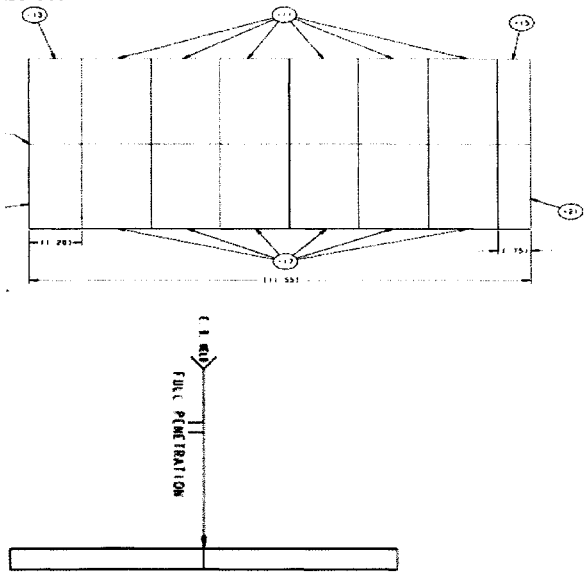

Penetration Requirements:	%	Depth (Inches)	Length
Spot Tack Weld			N/A
Stitch Tack Weld			
Seal Weld			N/A
Weld	100 %	.330 min.	N/A
Cosmetic Weld			N/A

Weld Type	Beam KV	Beam MA	Frequency Hz	Amplitude (X / Y)	Spot Size Inches	Welding Speed IN / MIN	Welding Speed SEC / REV	Defocus	Gun to work Distance
Tack Weld	140	3	n/a	X=n/a Y= n/a	X= n/a Y= n/a	30	n/a	- ½"	11"
Seal Weld	140	11	n/a	X= n/a Y= n/a	X= n/a Y= n/a	30	n/a	- ½"	11"
Weld	140	22	n/a	X= n/a Y= n/a	X= n/a Y= n/a	30	n/a	- ½"	11"
Cosmetic Weld				X= Y=	X= Y=				

Comments: "No fit up gap, No filler material and No Pre-heat of parts required" Surface of the was consistent Crown except at the intersection of each part. That had inconsistent surface to to it. That is where the parts are Going to get sliced apart. The under bead looked liked the top surface same comments about intersections.

Electron Beam Welding Data Sheet

WO/ST No.: 001660	Seq. No. 248
Operation No.:7 & 8	Sheet 1 of 1

Customer: Brookhaven National Lab.	Vendor used for welding: Advanced Energy Systems, Inc.
Date:4/2/2009 / Charge Number: GC1292-001	Machine Type: Electron Beam Welder
Program Number: 0346	Machine Serial Number: 636
Part Name: Bend test specimen	Gun Type: BK1.4 : 1.4 mm FILA. V-STYLE
Part Number:1242T00132-5 / Rev. B / Qty. 1	Operator: Ted Matos
Serial Number: N/A	**Weld Description**
Sketch:	Specification Number: WPS-N-1-08
	Material 1:Nb55Ti
	Material 2: Nb RRR>250
	Weld Type: Full Penetration keyhole weld
	Joint Type: interlocking
	Joint Thickness: .260
	Tooling
	Fixture Type: plate holder
	Fixture Angle: 0 degrees
	Weld Cycle Data
	Vacuum Level: 2.8x 10-5
	Ramp Up: N/A
	Over Lap: N/A
	Fade Out: N/A
	Cool down time in vacuum: 20 min.
	Back fill time to 20 Torr: N/A
	Cool down time at 20 Torr: N/A
	Temperature at atmosphere: 111.6

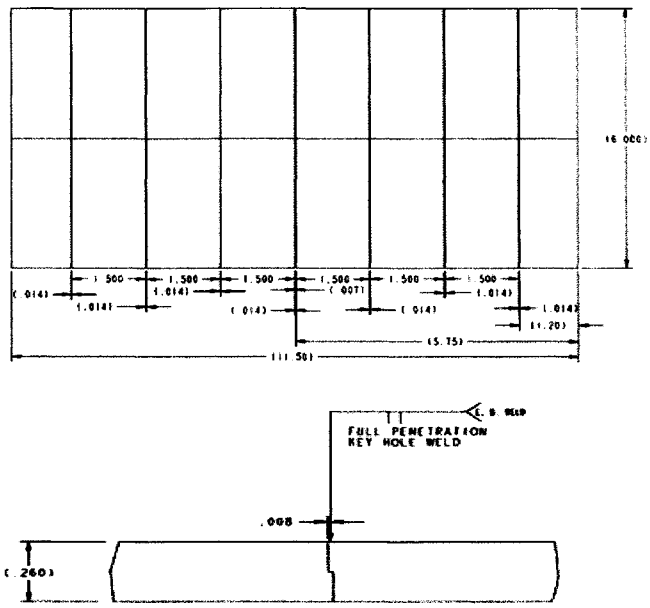

Penetration Requirements:	%	Depth (Inches)	Length
Spot Tack Weld			N/A
Stitch Tack Weld			
Seal Weld			N/A
Weld	100%	.260	N/A
Cosmetic Weld			N/A

Weld Type	Beam KV	Beam MA	Frequency Hz	Amplitude (X / Y)	Spot Size Inches	Welding Speed IN / MIN	Welding Speed SEC / REV	Defocus	Gun to work Distance
Tack Weld	140	3	N/A	X=N/A Y=N/A	X=.005 Y= .005	Manual		- ½ "	11"
Seal Weld	140	6	N/A	X=N/A Y=N/A	X= .005 Y= .005	30"		- ½"	11"
Weld	140	19	N/A	X=N/A Y=N/A	X= .005 Y= .005	30"		- ½"	11"
Cosmetic Weld				X= Y=	X= Y=				

Comments: "No fit up gap, No filler material and No Pre-heat of parts required" The weld surface looks consisten
The under bead looks consistent except at the intersections where each of the parts meet.

Certified Test Report

LABORATORY TESTING INC.
2331 Topaz Drive, Hatfield, PA 19440
Phone: 800-219-9095 ◆ Fax: 800-219-9096

BNL001-09-05-15980-23

Accredited Nadcap™
Materials Testing Laboratory
Nondestructive Testing

SOLD TO
Brookhaven National Laboratory
Collider-Accelerator Dept.
Building 911A
Upton, NY 11973-5000

SHIP TO
Brookhaven National Laboratory
Collider-Accelerator Dept.
Building 911A
Upton, NY 11973-5000
ATTN: G. T. McIntyre

CUSTOMER P.O.
BNL-0000148742

CERTIFICATION DATE
6/18/2009

SHIP VIA
EMAIL & UPS

DESCRIPTION

Quantity:	1
Size:	6 1/8" x 11 1/2"
PO Line Item No.:	3 & 4
Drawing No.:	1242T00 132
Weld Type:	Butt
Weld Thicknesses:	0.260 / 0.260
Weld Angle from Norm:	N/A
Material Types:	RRR / NbTi
PQR No. (AES-Seq. No):	AES- EGUN-248
Material:	Niobium

BEND TEST:
APPLICABLE SPECIFICATIONS: ASME BPVC SECTION IX, 2007 EDITION, 2008a ADDENDA

Bend Type	**ROOT 1**	**ROOT 2**	**ROOT 3**
Specimen Thickness (Inches)	.260	.260	.260
Bend Through (Degrees)	180	180	180
Pin Diameter (Inches)	1.04	1.04	1.04
Bend Test Results	Satisfactory	Satisfactory	Satisfactory

BEND TEST:
APPLICABLE SPECIFICATIONS: ASME BPVC SECTION IX, 2007 EDITION, 2008a ADDENDA

Bend Type	**FACE 1**	**FACE 2**	**FACE 3**
Specimen Thickness (Inches)	.260	.260	.260
Bend Through (Degrees)	180	180	180
Pin Diameter (Inches)	1.04	1.04	1.04
Bend Test Results	Satisfactory	Satisfactory	Satisfactory

The services performed above were done in accordance with LTI's Quality System Program Manual Revision 18 dated 7/27/07 and ISO/IEC 17025. These results relate only to the items tested and this report shall not be reproduced, except in full, without the written approval of Laboratory Testing, Inc. L.T.I. is accredited by PRI to ISO17025 and by Nadcap for NDT and Materials Testing for the test methods and specific services as listed in the Scopes of Accreditation available at www.labtesting.com and www.eAuditNet.com. The results reported on this test report represent the actual attributes of the material tested and indicate full compliance with all applicable specification and contract requirements.

MERCURY CONTAMINATION: During the testing and inspection, the product did not come in direct contact with mercury or any of its compounds nor with any mercury containing devices employing a single boundary of containment.

NOTE: The recording of false, fictitious or fraudulent statements or entries on this document may be punishable as a felony under Federal Statutes.

Sherri L. Scheifele
QA Specialist

Sherri L Scheifele

By: _____
Authorized Signature

Electron Beam Welding Data Sheet

WO/ST No.: 001629	Seq. No. 239
Operation No.: 6&7	Sheet 1 of 1

Customer: Brookhaven National Lab.	Vendor used for welding: Advance Energy Systems inc.
Date: 2/16/2009 / Charge Number: GC1292-001	Machine Type: Electron Beam Welder
Program Number: 0345	Machine Serial Number: 636
Part Name: Charpt-v-notch specimen plate	Gun Type:BK 1.4 mm fila. V-Style Ribbon
Part Number:1242T00121-5 / Rev. / Qty. 1	Operator: Ted Matos
Serial Number: N/A	**Weld Description**
Sketch: thickness .253	Specification Number: WPS-N-108
	Material 1: Niobium .253 thick
	Material 2: Niobium .253 thick
	Weld Type: full pen. with cosmetic pass
	Joint Type: interlock
	Joint Thickness: .253
	Tooling
	Fixture Type: test piece holder
	Fixture Angle: 0 degree
	Weld Cycle Data
	Vacuum Level: 2.0 x 10-5
	Ramp Up: N/A
	Over Lap: N/A
	Fade Out: N/A
	Cool down time in vacuum: 30 min.
	Back fill time to 20 Torr: 22 min.
	Cool down time at 20 Torr: 15 min.
	Temperature at atmosphere:

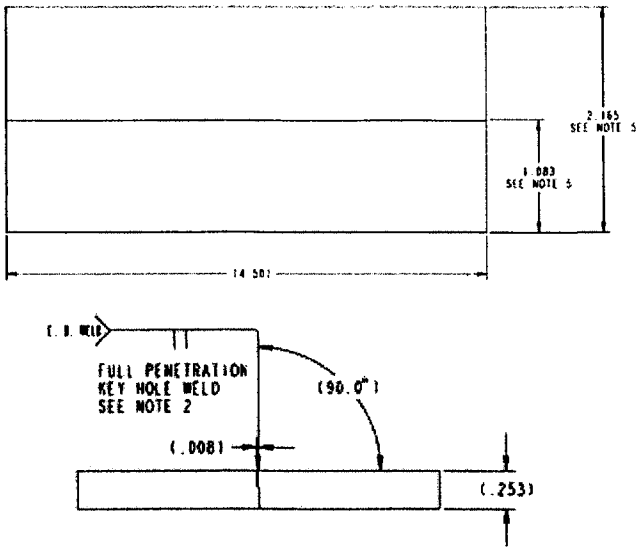

Align cross hairs .008 off joint

Penetration Requirements:	%	Depth (Inches)	Length
Spot Tack Weld			N/A
Stitch Tack Weld			
Seal Weld			N/A
Weld	100	.253	N/A
Cosmetic Weld			N/A

Weld Type	Beam kV	Beam mA	Frequency Hz	Amplitude (X / Y)	Spot Size Inches	Welding Speed IN / MIN	Welding Speed SEC / REV	Defocus	Gun to work Distance
Tack Weld	100	7	1000	X=2.5 Y= 2.5	X=.034 Y=.034	18	N/A	- ½"	11"
Weld Pass	100	47	1000	X=2.5 Y=2.5	X=.034 Y=.034	18	N/A	-1/2" (570)	11"
Cosmetic Pass	100	37	1000	X=2.5 Y=2.5	X= .034 Y=.034	18	N/A	+4 (610)	11"
				X= Y=	X= Y=				

Comments: "No fit up gap, No filler material and No Pre-heat of parts required" visual inspection good.

Certified Test Report

LABORATORY TESTING INC.
2331 Topaz Drive, Hatfield, PA 19440
Phone: 800-219-9095 ◆ Fax: 800-219-9096

BNL001-09-05-15980-14

Accredited Nadcap™
Materials Testing Laboratory
Nondestructive Testing

SOLD TO
Brookhaven National Laboratory
Collider-Accelerator Dept.
Building 911A
Upton, NY 11973-5000

SHIP TO
Brookhaven National Laboratory
Collider-Accelerator Dept.
Building 911A
Upton, NY 11973-5000
ATTN: G. T. McIntyre

CUSTOMER P.O.	CERTIFICATION DATE	SHIP VIA
BNL-0000148742	6/18/2009	EMAIL & UPS

DESCRIPTION

Quantity:	1
Size:	2 3/8" x 4 1/2"
PO Line Item No.:	5
Drawing No.:	1242T00 121
Weld Type:	Interlocking Butt
Weld Thicknesses:	0.253 / 0.253
Weld Angle from Norm:	N/A
Material Types:	RRR / RRR
PQR No. (AES-Seq. No):	AES- EGUN-239
Material:	Niobium

Charpy V-Notch Impact testing at -320° F (77 Kelvin) was performed on (1) set of the submitted Test Specimen in accordance with Customer's Instructions with the following results:

LOCATION	PIECE NO.	(FT-LBS.) ENERGY	(INCHES) LAT. EXP.	(%) SHEAR
	1	5	.009	5
CENTER WELD	2	4	.008	5
	3	4	.009	5

NOTE: Sub-size (6mm x 10mm) charpy specimens were used for above testing.

The services performed above were done in accordance with LTI's Quality System Program Manual Revision 18 dated 7/27/07 and ISO/IEC 17025. These results relate only to the items tested and this report shall not be reproduced, except in full, without the written approval of Laboratory Testing, Inc. L.T.I. is accredited by PRI to ISO17025 and by Nadcap for NDT and Materials Testing for the test methods and specific services as listed in the Scopes of Accreditation available at www.labtesting.com and www.eAuditNet.com. The results reported on this test report represent the actual attributes of the material tested and indicate full compliance with all applicable specification and contract requirements.

MERCURY CONTAMINATION: During the testing and inspection, the product did not come in direct contact with mercury or any of its compounds nor with any mercury containing devices employing a single boundary of containment.

NOTE: The recording of false, fictitious or fraudulent statements or entries on this document may be punishable as a felony under Federal Statutes.

Sherri L. Scheifele
QA Specialist

Sherri L Scheifele

By: _____
Authorized Signature

Electron Beam Welding Data Sheet

WO/ST No.: 001831	Seq. No. 255
Operation No.: 5 & 6	Sheet 1 of 1

Customer: Brookhaven National Lab.	Vendor used for welding: Advanced Energy Systems, Inc.
Date: 4/23/2009 | Charge Number: GC1292-001	Machine Type: Electron Beam Welder
Program Number: O345	Machine Serial Number: 636
Part Name: Charpt-v-notch specimen	Gun Type: BK1.4: 1.4 mm FILA. V-STYLE
Part Number: 1242T00122-5 | Rev. B | Qty. 1	Operator: Ted Matos
Serial Number: N/A	**Weld Description**
Sketch:	Specification Number: WPS-N-1-08
	Material 1:.335x1.35x4.5 Nb RRR
	Material 2: :.335x1.35x4.5 Nb RRR
	Weld Type: Keyhole Weld
	Joint Type: Butt
	Joint Thickness. .395
	Tooling
	Fixture Type: Plate holder
	Fixture Angle: 30 angle CNC = 60.00
	Weld Cycle Data
	Vacuum Level: 3.4 x 10 -5
	Ramp Up: N/A
	Over Lap: N/A
	Fade Out: N/A
	Cool down time in vacuum: left under vac.
	Back fill time to 20 Torr: over night
	Cool down time at 20 Torr: n/a
	Temperature at atmosphere: n/a

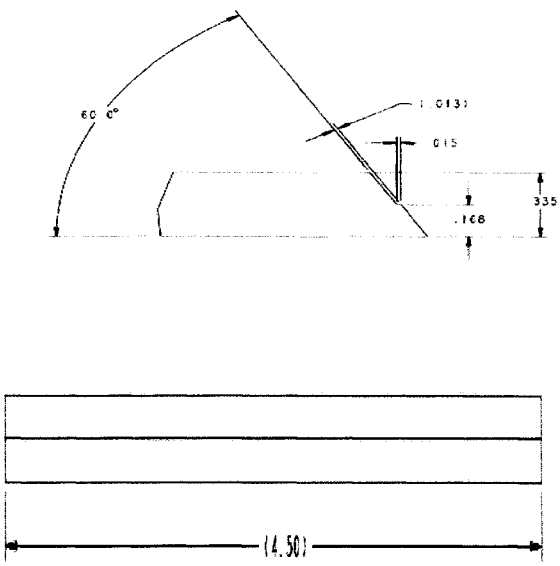

Penetration Requirements:	%	Depth (Inches)	Length
Spot Tack Weld			N/A
Stitch Tack Weld			
Seal Weld			N/A
Weld	100%	.300 min.	N/A
Cosmetic Weld			N/A

Weld Type	Beam KV	Beam MA	Frequency Hz	Amplitude (X / Y)	Spot Size Inches	Welding Speed IN / MIN	Welding Speed SEC / REV	Defocus	Gun to work Distance
Tack Weld	110	3	1000	X=1.0 Y=1.0	X= .020 Y= .020	15"	N/A	-1"	11"
Seal Weld	N/A	N/A	N/A	X= N/A Y= N/A	X= N/A Y= N/A	N/A	N/A	N/A	N/A
Weld	110	50	1000	X=1.0 Y=1.0	X=.020 Y= .020	15"	N/A	-1"	11"
Cosmetic Weld				X= Y=	X= Y=				

Comments: "No fit up gap, No filler material and No Pre-heat of parts required" offset ".013"on to male side.
Visual was good the surface had a slight positive crown and the under side had light pop through length of pc.

Certified Test Report

LABORATORY TESTING INC.
2331 Topaz Drive, Hatfield, PA 19440
Phone: 800-219-9095 • Fax: 800-219-9096

BNL001-09-05-15980-15

Accredited Nadcap™
Materials Testing Laboratory
Nondestructive Testing

SOLD TO
Brookhaven National Laboratory
Collider-Accelerator Dept.
Building 911A
Upton, NY 11973-5000

SHIP TO
Brookhaven National Laboratory
Collider-Accelerator Dept.
Building 911A
Upton, NY 11973-5000
ATTN: G. T. McIntyre

CUSTOMER P.O.	CERTIFICATION DATE	SHIP VIA
BNL-0000148742	6/18/2009	EMAIL & UPS

DESCRIPTION

Quantity: 1
Size: 2 3/8" x 4 1/2"
PO Line Item No.: 5
Drawing No.: 1242T00 122
Weld Type: Angle Interlocking Butt
Weld Thicknesses: 0.165 / 0.335
Weld Angle from Norm: 30 Degrees
Material Types: RRR / RRR
PQR No. (AES-Seq. No: AES- EGUN-255
Material: Niobium

Charpy V-Notch Impact testing at -320° F (77 Kelvin) was performed on (1) set of the submitted Test Specimen in accordance with Customer's Instructions with the following results:

LOCATION	PIECE NO.	(FT-LBS.) ENERGY	(INCHES) LAT. EXP.	(%) SHEAR
	1	4	.006	5
CENTER WELD	2	4	.008	5
	3	4	.005	5

NOTE: Sub-size (8mm x 10mm) charpy specimens were used for above testing.

The services performed above were done in accordance with LTI's Quality System Program Manual Revision 18 dated 7/27/07 and ISO/IEC 17025. These results relate only to the items tested and this report shall not be reproduced, except in full, without the written approval of Laboratory Testing, Inc. L.T.I. is accredited by PRI to ISO17025 and by Nadcap for NDT and Materials Testing for the test methods and specific services as listed in the Scopes of Accreditation available at www.labtesting.com and www.eAuditNet.com. The results reported on this test report represent the actual attributes of the material tested and indicate full compliance with all applicable specification and contract requirements.

MERCURY CONTAMINATION: During the testing and inspection, the product did not come in direct contact with mercury or any of its compounds nor with any mercury containing devices employing a single boundary of containment.

NOTE: The recording of false, fictitious or fraudulent statements or entries on this document may be punishable as a felony under Federal Statutes.

Sherri L. Scheifele
QA Specialist

Sherri L Scheifele

By: _____
Authorized Signature

Electron Beam Welding Data Sheet

WO/ST No.: 001631	Seq. No.244-1
Operation No.: 5 & 6	Sheet 1 of 2

Customer: Brookhaven National Lab.	Vendor used for welding: Advanced Energy Systems, Inc.
Date: 2/23/2009 | Charge Number: GC1292	Machine Type: Electron Beam Welder
Program Number: O345	Machine Serial Number:636
Part Name: Charpy V-Notch Specimen	Gun Type: BK 1.4 mm fil. V-style ribbon
Part Number:1292G000123-5 | Rev. | Qty. 1	Operator: Ted Matos
Serial Number: N/A	**Weld Description**
Sketch:	Specification Number: WPS-N-1-08
	Material 1: Niobium .157
	Material 2: Niobium .157
	Weld Type: Keyhole weld
	Joint Type: Interlocking angular
	Joint Thickness: .167
	Tooling
	Fixture Type: test piece holder
	Fixture Angle: 19. 5 degree
	Weld Cycle Data
	Vacuum Level: 3.0 x10 -5
	Ramp Up: N/A
	Over Lap: N/A
	Fade Out: N/A
	Cool down time in vacuum: 30 min.
	Back fill time to 20 Torr: 22 min.
	Cool down time at 20 Torr: 15 min.
	Temperature at atmosphere: 95 .0

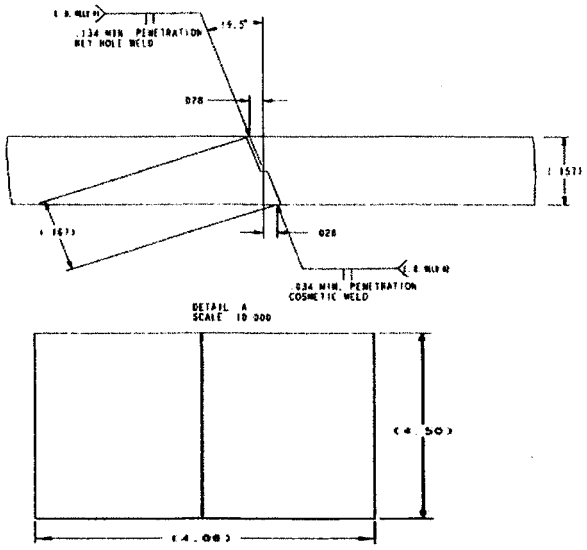

Penetration Requirements:	%	Depth (Inches)	Length
Spot Tack Weld			N/A
Stitch Tack Weld			
Seal Weld			N/A
Weld	80	.138(min.)	N/A
Cosmetic Weld			N/A

Weld Type	Beam KV	Beam MA	Frequency Hz	Amplitude (X / Y)	Spot Size Inches	Welding Speed IN / MIN	Welding Speed SEC / REV	Defocus	Gun to work Distance
Tack Weld	100	7	1000	X=2.5 Y=2.5	X=.034 Y= .034	18	N/A	-1/2"	11
Weld Pass	100	25	1000	X=2.5 Y=2.5	X= .034 Y= .034	18	N/A	-1/2 "	11
Cosmetic pass	N/A	N/A	N/A	N/A N/A	N/A N/A	N/A	N/A	N/A	N/A
				X= Y=	X= Y=				

Comments: "No fit up gap, No filler material and No Pre-heat of parts required" visual inspection of weld Was good.

Electron Beam Welding Data Sheet

WO/ST No.: 001631	Seq. No.244-2
Operation No.: 5 & 6	Sheet 2 of 2

Customer: Brookhaven National Lab.	Vendor used for welding: Advanced Energy Systems, Inc.
Date: 2/23/2009 | Charge Number: GC1292	Machine Type: Electron Beam Welder
Program Number: O345	Machine Serial Number:636
Part Name: Charpy V-Notch Specimen	Gun Type: BK 1.4 mm fil. V-style ribbon
Part Number:1292G000123-5 | Rev. | Qty. 1	Operator: Ted Matos
Serial Number: N/A	**Weld Description**
Sketch:	Specification Number: WPS-N-1-08
	Material 1: Niobium .157
	Material 2: Niobium .157
	Weld Type: Keyhole weld
	Joint Type: Interlocking angular
	Joint Thickness: .167
	Tooling
	Fixture Type: test piece holder
	Fixture Angle: 19. 5 degree
	Weld Cycle Data
	Vacuum Level: 3.0 x10 -5
	Ramp Up: N/A
	Over Lap: N/A
	Fade Out: N/A
	Cool down time in vacuum: 30 min.
	Back fill time to 20 Torr: 22 min.
	Cool down time at 20 Torr: 15 min.
	Temperature at atmosphere: 95 .0

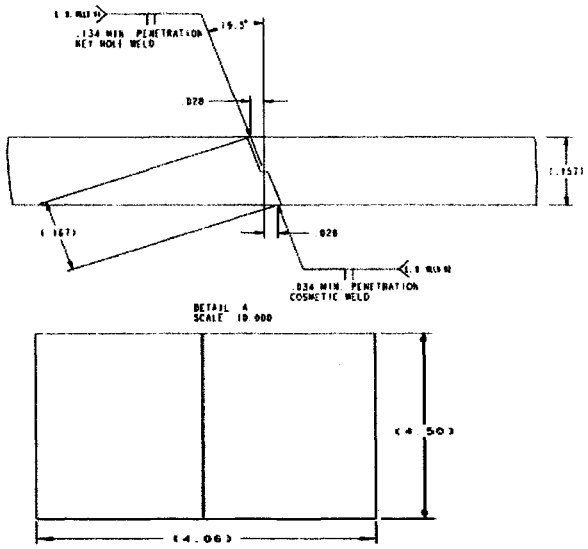

Penetration Requirements:	%	Depth (Inches)	Length
Spot Tack Weld			N/A
Stitch Tack Weld			
Seal Weld			N/A
Weld	20	.033(min.)	N/A
Cosmetic Weld			N/A

Weld Type	Beam KV	Beam MA	Frequency Hz	Amplitude (X / Y)	Spot Size Inches	Welding Speed IN / MIN	Welding Speed SEC / REV	Defocus	Gun to work Distance
Tack Weld	N/A	N/A	N/A	N/A N/A	N/A N/A	N/A	N/A	N/A	N/A
Weld Pass	N/A	N/A	N/A	N/A N/A	N/A N/A	N/A	N/A	N/A	N/A
"RF" pass	100	25	1000	X=3.5 Y=3.5	X=.040 Y=.040	18	N/A	+4 (670)	11
				X= Y=	X= Y=				

Comments: "No fit up gap, No filler material and No Pre-heat of parts required" visual inspection of weld Was good.

Certified Test Report

LABORATORY TESTING INC.
2331 Topaz Drive, Hatfield, PA 19440
Phone: 800-219-9095 ◆ Fax: 800-219-9096

BNL001-09-05-15980-16

Accredited Nadcap™
Materials Testing Laboratory
Nondestructive Testing

SOLD TO
Brookhaven National Laboratory
Collider-Accelerator Dept.
Building 911A
Upton, NY 11973-5000

SHIP TO
Brookhaven National Laboratory
Collider-Accelerator Dept.
Building 911A
Upton, NY 11973-5000
ATTN: G. T. McIntyre

CUSTOMER P.O.	CERTIFICATION DATE	SHIP VIA
BNL-0000148742	6/18/2009	EMAIL & UPS

DESCRIPTION

Quantity:	1
Size:	2 3/8" x 4 1/2"
PO Line Item No.:	5
Drawing No.:	1242T00 123
Weld Type:	Angle Interlocking Butt
Weld Thicknesses:	0.157 / 0.157
Weld Angle from Norm:	19.5 Degrees
Material Types:	RRR / RRR
PQR No. (AES-Seq. No):	AES- EGUN-244
Material:	Niobium

Charpy V-Notch Impact testing at -320° F (Kelvin) was performed on (1) set of the submitted Test Specimen in accordance with Customer's Instructions with the following results:

LOCATION	PIECE NO.	(FT-LBS.) ENERGY	(INCHES) LAT. EXP.	(%) SHEAR
	1	1	.003	5
CENTER WELD	**2**	1	.004	5
	3	1	.002	5

NOTE: Sub-size (3.3mm x 10mm) charpy specimens were used for above testing.

The services performed above were done in accordance with LTI's Quality System Program Manual Revision 18 dated 7/27/07 and ISO/IEC 17025. These results relate only to the items tested and this report shall not be reproduced, except in full, without the written approval of Laboratory Testing, Inc. L.T.I. is accredited by PRI to ISO17025 and by Nadcap for NDT and Materials Testing for the test methods and specific services as listed in the Scopes of Accreditation available at www.labtesting.com and www.eAuditNet.com. The results reported on this test report represent the actual attributes of the material tested and indicate full compliance with all applicable specification and contract requirements.

MERCURY CONTAMINATION: During the testing and inspection, the product did not come in direct contact with mercury or any of its compounds nor with any mercury containing devices employing a single boundary of containment.

NOTE: The recording of false, fictitious or fraudulent statements or entries on this document may be punishable as a felony under Federal Statutes.

Sherri L. Scheifele
QA Specialist

Sherri L. Scheifele

By: _____
Authorized Signature

Electron Beam Welding Data Sheet

WO/ST No.: 001632	Seq. No. 251
Operation No.: 6&7	Sheet 1 of 1

Customer: Brookhaven National Lab.	Vendor used for welding: Advanced Energy Systems, Inc.
Date:4/6/2009 / Charge Number: GC1292-001	Machine Type: Electron Beam Welder
Program Number: 0345	Machine Serial Number: 636
Part Name: Charpt-v-Notch Specimen	Gun Type: BK1.4: 1.4 mm FILA. V-STYLE
Part Number: 1241T00124-5 / Rev. A / Qty.	Operator: Ted Matos
Serial Number: N/A	**Weld Description**
Sketch:	Specification Number: WPS-N-1-08
	Material 1:Nb55Ti .375x1.25x4.50
	Material 2: Nb RRR>250 .375x1.25x4.50
	Weld Type: Full penetration Keyhole weld
	Joint Type: Butt
	Joint Thickness: .375
	Tooling
	Fixture Type: Holding plate
	Fixture Angle: 0
	Weld Cycle Data
	Vacuum Level: 2.8 x 1. -5
	Ramp Up: n/a
	Over Lap: n/a
	Fade Out: n/a
	Cool down time in vacuum: 20 min.
	Back fill time to 20 Torr: n/a
	Cool down time at 20 Torr: n/a
	Temperature at atmosphere: 113.0

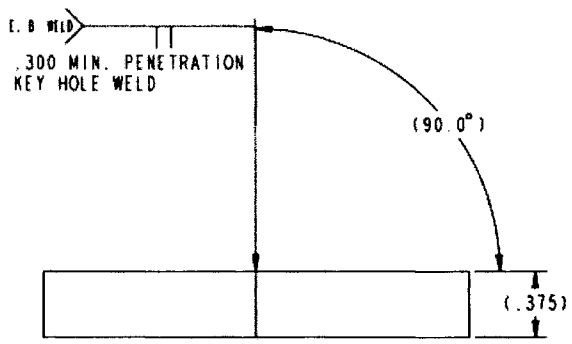

Penetration Requirements:	%	Depth (Inches)	Length
Spot Tack Weld			N/A
Stitch Tack Weld			
Seal Weld			N/A
Weld	100 %	.375 min.	N/A
Cosmetic Weld			N/A

Weld Type	Beam KV	Beam MA	Frequency Hz	Amplitude (X / Y)	Spot Size Inches	Welding Speed IN / MIN	Welding Speed SEC / REV	Defocus	Gun to work Distance
Tack Weld	140	3	N/A	X= N/A Y= N/A	X= N/A Y= N/A	30"	N/A N/A	- ½"	11"
Seal Weld	140	11	N/A	X= N/A Y= N/A	X= N/A Y= N/A	30"	N/A N/A	- ½"	11"
Weld	140	22	N/A	X= N/A Y= N/A	X= N/A Y= N/A	30"	N/A	- ½"	11"
Cosmetic Weld				X= Y=	X= Y=				

Comments: "No fit up gap, No filler material and No Pre-heat of parts required" The Surface weld looked good The under bead wasn't a consistent crown liked the other two weld specimens, This one was a consistent very light Pop through the length of the weld. Just realized that this piece is different thickness than the other pieces with It. That's why it was a different result it still show a consistently light pop through .

Certified Test Report

LABORATORY TESTING INC.
2331 Topaz Drive, Hatfield, PA 19440
Phone: 800-219-9095 • Fax: 800-219-9096

BNL001-09-05-15980-17

Accredited Nadcap™
Materials Testing Laboratory
Nondestructive Testing

SOLD TO
Brookhaven National Laboratory
Collider-Accelerator Dept.
Building 911A
Upton, NY 11973-5000

SHIP TO
Brookhaven National Laboratory
Collider-Accelerator Dept.
Building 911A
Upton, NY 11973-5000
ATTN: G. T. McIntyre

CUSTOMER P.O.	CERTIFICATION DATE	SHIP VIA
BNL-0000148742	6/18/2009	EMAIL & UPS

DESCRIPTION

Quantity:	1
Size:	2 3/8" x 4 1/2"
PO Line Item No.:	5
Drawing No.:	1242T00 124
Weld Type:	Butt
Weld Thicknesses:	0.330 / 0.330
Weld Angle from Norm:	N/A
Material Types:	RRR / NbTi
PQR No. (AES-Seq. No):	AES- EGUN-251
Material:	Niobium

Charpy V-Notch Impact testing at -320° F (77 Kelvin) was performed on (1) set of the submitted Test Specimen in accordance with Customer's Instructions with the following results:

LOCATION	PIECE NO.	(FT-LBS.) ENERGY	(INCHES) LAT. EXP.	(%) SHEAR
	1	4	.004	5
CENTER WELD	2	4	.005	5
	3	4	.004	5

NOTE: Sub-size (7mm x 10mm) charpy specimens were used for above testing.

The services performed above were done in accordance with LTI's Quality System Program Manual Revision 18 dated 7/27/07 and ISO/IEC 17025. These results relate only to the items tested and this report shall not be reproduced, except in full, without the written approval of Laboratory Testing, Inc. L.T.I. is accredited by PRI to ISO17025 and by Nadcap for NDT and Materials Testing for the test methods and specific services as listed in the Scopes of Accreditation available at www.labtesting.com and www.eAuditNet.com. The results reported on this test report represent the actual attributes of the material tested and indicate full compliance with all applicable specification and contract requirements.

MERCURY CONTAMINATION: During the testing and inspection, the product did not come in direct contact with mercury or any of its compounds nor with any mercury containing devices employing a single boundary of containment.

NOTE: The recording of false, fictitious or fraudulent statements or entries on this document may be punishable as a felony under Federal Statutes.

Sherri L. Scheifele
QA Specialist

Sherri L Scheifele

By: _____
Authorized Signature

Electron Beam Welding Data Sheet

WO/ST No.: 001633	Seq. No. 253
Operation No.: 5 & 6	Sheet 1 of 1

Customer: Brookhaven National Lab.	Vendor used for welding: Advanced Energy Systems, Inc.
Date: 04/16/2009 | Charge Number: GC1292-001	Machine Type: Electron Beam Welder
Program Number:O345	Machine Serial Number: 636
Part Name: Charpt-v-Notch specimen	Gun Type: BK1.4: 1.4 mm FILA. V-STYLE
Part Number: 1242T00125-5 | Rev. A | Qty. 1	Operator: Ted Matos
Serial Number: N/A	**Weld Description**
Sketch:	Specification Number: WPS-N-1-08
	Material 1: .375x1.25x4.5 Nb55Ti
	Material 2: .375x1.25x4.5 Nb55Ti
	Weld Type: keyhole weld full penetration
	Joint Type: butt
	Joint Thickness:.375
	Tooling
	Fixture Type: Plate holder
	Fixture Angle: no angle
	Weld Cycle Data
	Vacuum Level: 3.0 x10-5
	Ramp Up: N/A
	Over Lap: N/A
	Fade Out: N/A
	Cool down time in vacuum: over night
	Back fill time to 20 Torr: N/A
	Cool down time at 20 Torr: N/A
	Temperature at atmosphere: N/A

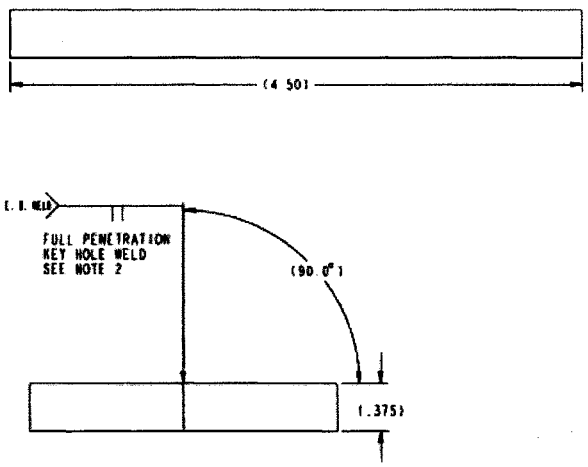

Penetration Requirements:	%	Depth (Inches)	Length
Spot Tack Weld			N/A
Stitch Tack Weld			
Seal Weld			N/A
Weld	100 %	.375	N/A
Cosmetic Weld			N/A

Weld Type	Beam KV	Beam MA	Frequency Hz	Amplitude (X / Y)	Spot Size Inches	Welding Speed IN / MIN	Welding Speed SEC / REV	Defocus	Gun to work Distance
Tack Weld	100	3	N/A	X= N/A Y= N/A	X= N/A Y= N/A	15	N/A	+2	11
Seal Weld	100	11	N/A	X= N/A Y= N/A	X= N/A Y= N/A	15	N/A	+2	11
Weld	100	23	N/A	X= N/A Y= N/A	X= N/A Y= N/A	15	N/A	+2	11
Cosmetic Weld				X= Y=	X= Y=				

Comments: "No fit up gap, No filler material and No Pre-heat of parts required" weld had 100% melt through The whole length of the part.

Certified Test Report

LABORATORY TESTING INC.
2331 Topaz Drive, Hatfield, PA 19440
Phone: 800-219-9095 • Fax: 800-219-9096

BNL001-09-05-15980-18

Accredited Nadcap™
Materials Testing Laboratory
Nondestructive Testing

SOLD TO
Brookhaven National Laboratory
Collider-Accelerator Dept.
Building 911A
Upton, NY 11973-5000

SHIP TO
Brookhaven National Laboratory
Collider-Accelerator Dept.
Building 911A
Upton, NY 11973-5000
ATTN: G. T. McIntyre

CUSTOMER P.O.	CERTIFICATION DATE	SHIP VIA
BNL-0000148742	6/18/2009	EMAIL & UPS

DESCRIPTION

Quantity:	1
Size:	2 3/8" x 4 1/2"
PO Line Item No.:	5
Drawing No.:	1242T00 125
Weld Type:	Butt
Weld Thicknesses:	0.375 / 0.313
Weld Angle from Norm:	N/A
Material Types:	NbTi / NbTi
PQR No. (AES-Seq. No):	AES- EGUN-253
Material:	Niobium

Charpy V-Notch Impact testing at -320° F (77 Kelvin) was performed on (1) set of the submitted Test Specimen in accordance with Customer's Instructions with the following results:

LOCATION	PIECE NO.	(FT-LBS.) ENERGY	(INCHES) LAT. EXP.	(%) SHEAR
	1	40	.026	20
CENTER WELD	2	50	.034	30
	3	47	.031	30

NOTE: Sub-size (9mm x 10mm) charpy specimens were used for above testing.

The services performed above were done in accordance with LTI's Quality System Program Manual Revision 18 dated 7/27/07 and ISO/IEC 17025. These results relate only to the items tested and this report shall not be reproduced, except in full, without the written approval of Laboratory Testing, Inc. L.T.I. is accredited by PRI to ISO17025 and by Nadcap for NDT and Materials Testing for the test methods and specific services as listed in the Scopes of Accreditation available at www.labtesting.com and www.eAuditNet.com. The results reported on this test report represent the actual attributes of the material tested and indicate full compliance with all applicable specification and contract requirements.

MERCURY CONTAMINATION: During the testing and inspection, the product did not come in direct contact with mercury or any of its compounds nor with any mercury containing devices employing a single boundary of containment.

NOTE: The recording of false, fictitious or fraudulent statements or entries on this document may be punishable as a felony under Federal Statutes.

Sherri L. Scheifele
QA Specialist

Sherri L Scheifele

By: _____
Authorized Signature

Electron Beam Welding Data Sheet

WO/ST No.: 001635	Seq. No. 238
Operation No.: 5 &6	Sheet 1 of 1

Customer: Brookhaven National Lab.	Vendor used for welding: Advanced Energy Systems, Inc.
Date: 2/10/2009 | Charge Number: 1292GC00102	Machine Type: Electron Beam welder
Program Number: 0345	Machine Serial Number: 636
Part Name: Charpt-V- Notch specimen	Gun Type: BK 1.4 mm fil. V-Style Ribbon
Part Number:1242T00133-5 | Rev.n/a | Qty. 1	Operator: Ted Matos
Serial Number: N/A	**Weld Description**
Sketch:	Specification Number: WPS-N-1_08
	Material 1: niobium .118 thick
	Material 2: niobium .118 thick
	Weld Type: Full pen. with cosmetic pass
	Joint Type: interlock
	Joint Thickness: .121
	Tooling
	Fixture Type: test piece holder
	Fixture Angle: 13 degree
	Weld Cycle Data
	Vacuum Level: 2.4 x 10-5
	Ramp Up: N/A
	Over Lap: N/A
	Fade Out: N/A
	Cool down time in vacuum: 30 min.
	Back fill time to 20 Torr: 22 min.
	Cool down time at 20 Torr: 15 min.
	Temperature at atmosphere: 99.0

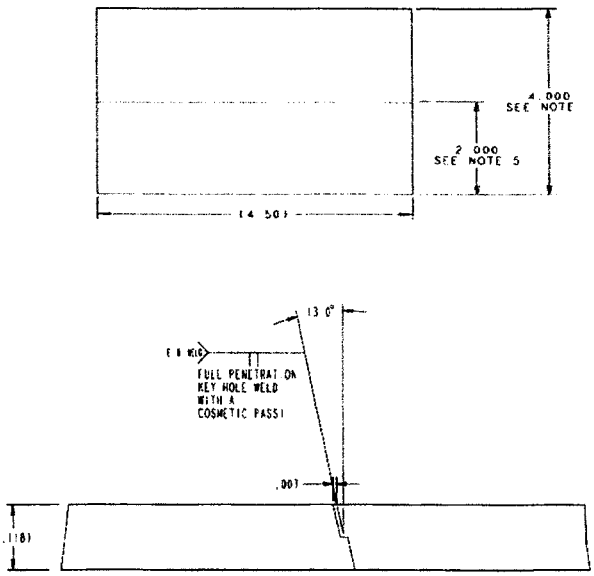

Penetration Requirements:	%	Depth (Inches)	Length
Spot Tack Weld			N/A
Stitch Tack Weld			
Seal Weld			N/A
Weld	100	.121	N/A
Cosmetic Weld			N/A

Weld Type	Beam kV	Beam mA	Frequency Hz	Amplitude (X / Y)	Spot Size Inches	Welding Speed IN / MIN	Welding Speed SEC / REV	Defocus	Gun to work Distance
Tack Weld	100	7	1000	X=.3 Y=.3	X=.009 Y=.009	18	N/A	- ½"	11
Weld Pass	100	18	1000	X=.3 Y=.3	X=.009 Y=.009	18	N/A	-1/2 " (570)	11
Cosmetic Pass	100	18	1000	X=.3 Y=.3	X= .009 Y=.009	18	N/A	+4" (610)	11
				X= Y=	X= Y=				

Comments: Parts were weld with no .007 offset, The fade out seemed to be slightly on edge of joint. Sectioned Etched and the whole joint was consumed by the weld.
"No fit up gap, No filler material and No Pre-heat of parts required"

Certified Test Report

LABORATORY TESTING INC.
2331 Topaz Drive, Hatfield, PA 19440
Phone: 800-219-9095 • Fax: 800-219-9096

BNL001-09-05-15980-24

Accredited Nadcap™
Materials Testing Laboratory
Nondestructive Testing

SOLD TO
Brookhaven National Laboratory
Collider-Accelerator Dept.
Building 911A
Upton, NY 11973-5000

SHIP TO
Brookhaven National Laboratory
Collider-Accelerator Dept.
Building 911A
Upton, NY 11973-5000
ATTN: G. T. McIntyre

CUSTOMER P.O.	CERTIFICATION DATE	SHIP VIA
BNL-0000148742	6/18/2009	EMAIL & UPS

DESCRIPTION

Quantity: 1
Size: 2 3/8" x 4 1/2"
PO Line Item No.: 5
Drawing No.: 1242T00 133
Weld Type: Angle Interlocking Butt
Weld Thicknesses: 0.118 / 0.118
Weld Angle from Norm: 13 Degrees
Material Types: RRR / RRR
PQR No. (AES-Seq. No): AES- EGUN-238
Material: Niobium

Charpy V-Notch Impact testing at -320° F (77 Kelvin) was performed on (1) set of the submitted Test Specimen in accordance with Customer's Instructions with the following results:

LOCATION	PIECE NO.	(FT-LBS.) ENERGY	(INCHES) LAT. EXP.	(%) SHEAR
	1	1	.002	5
CENTER WELD	2	1	.002	5
	3	1	.002	5

NOTE: Sub-size (2.5mm x 10mm) charpy specimens were used for above testing.

The services performed above were done in accordance with LTI's Quality System Program Manual Revision 18 dated 7/27/07 and ISO/IEC 17025. These results relate only to the items tested and this report shall not be reproduced, except in full, without the written approval of Laboratory Testing, Inc. L.T.I. is accredited by PRI to ISO17025 and by Nadcap for NDT and Materials Testing for the test methods and specific services as listed in the Scopes of Accreditation available at www.labtesting.com and www.eAuditNet.com. The results reported on this test report represent the actual attributes of the material tested and indicate full compliance with all applicable specification and contract requirements.

MERCURY CONTAMINATION: During the testing and inspection, the product did not come in direct contact with mercury or any of its compounds nor with any mercury containing devices employing a single boundary of containment.

NOTE: The recording of false, fictitious or fraudulent statements or entries on this document may be punishable as a felony under Federal Statutes.

Sherri L. Scheifele
QA Specialist

Sherri L Scheifele

By: _____
Authorized Signature

Electron Beam Welding Data Sheet

WO/ST No.: 001661	Seq. No. 240
Operation No.: 6&7	Sheet 1 of 1

Customer: Brookhaven National Lab.		
Date: 2/17/2009	Charge Number: GC1292-001	
Program Number: 0346		
Part Name: Bend Test specimen plate		
Part Number:1242T00134-5	Rev. A	Qty. 1
Serial Number: N/A		

Sketch: thickness .253

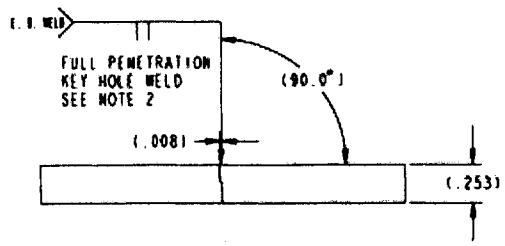

Align cross hairs .008 off joint

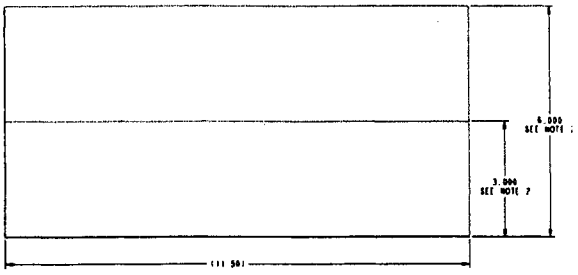

Vendor used for welding: Advance Energy Systems inc.
Machine Type: Electron Beam Welder
Machine Serial Number: 636
Gun Type: BK1.4 mm fil. V-Style Ribbon
Operator: Ted Matos
Weld Description
Specification Number: WPS-N-108
Material 1: Niobium .253 thick
Material 2: Niobium .253 thick
Weld Type: full pen. with cosmetic pass
Joint Type: interlock
Joint Thickness: .253
Tooling
Fixture Type: test piece holder
Fixture Angle: 0 degree
Weld Cycle Data
Vacuum Level: 2.0 x 10-5
Ramp Up: N/A
Over Lap: N/A
Fade Out: N/A
Cool down time in vacuum: 75 min.
Back fill time to 20 Torr:N/A
Cool down time at 20 Torr: 15 min.
Temperature at atmosphere: 117.5

Penetration Requirements:	%	Depth (Inches)	Length
Spot Tack Weld			N/A
Stitch Tack Weld			
Seal Weld			N/A
Weld	100	.253	N/A
Cosmetic Weld			N/A

Weld Type	Beam kV	Beam mA	Frequency Hz	Amplitude (X / Y)	Spot Size Inches	Welding Speed IN / MIN	Welding Speed SEC / REV	Defocus	Gun to work Distance
Tack Weld	100	7	1000	X=2.5	X=.034	18	N/A	- ½"	11"
				Y= 2.5	Y=.034				
Weld Pass	100	47	1000	X=2.5	X=.034	18	N/A	-1/2" (570)	11"
				Y=2.5	Y=.034				
Cosmetic Pass	100	37	1000	X=2.5	X= .034	18	N/A	+4 (610)	11"
				Y=2.5	Y=.034				
				X=	X=				
				Y=	Y=				

Comments: Manual tacking at intersection of each small piece. We vented the chamber had a challenge aligning Pieces. Visual inspection good.

"No fit up gap, No filler material and No Pre-heat of parts required"

Certified Test Report

LABORATORY TESTING INC.
2331 Topaz Drive, Hatfield, PA 19440
Phone: 800-219-9095 • Fax: 800-219-9096

BNL001-09-05-15980-25

Accredited Nadcap™
Materials Testing Laboratory
Nondestructive Testing

SOLD TO
Brookhaven National Laboratory
Collider-Accelerator Dept.
Building 911A
Upton, NY 11973-5000

SHIP TO
Brookhaven National Laboratory
Collider-Accelerator Dept.
Building 911A
Upton, NY 11973-5000
ATTN: G. T. McIntyre

CUSTOMER P.O.	CERTIFICATION DATE	SHIP VIA
BNL-0000148742	6/18/2009	EMAIL & UPS

DESCRIPTION

Quantity:	1
Size:	6 1/8" x 11 1/2"
PO Line Item No.:	3 & 4
Drawing No.:	1242T00 134
Weld Type:	Interlocking Butt
Weld Thicknesses:	0.253 / 0.253
Weld Angle from Norm:	N/A
Material Types:	RRR / RRR
PQR No. (AES-Seq. No):	AES- EGUN-240
Material:	Niobium

BEND TEST:
APPLICABLE SPECIFICATIONS: ASME BPVC, SECTION IX, 2007 EDITION, 2008a ADDENDA

Bend Type	ROOT 1	ROOT 2	ROOT 3
Specimen Thickness (Inches)	.253	.253	.253
Bend Through (Degrees)	180	180	180
Pin Diameter (Inches)	1.012	1.012	1.012
Bend Test Results	Satisfactory	Satisfactory	Satisfactory

BEND TEST:
APPLICABLE SPECIFICATIONS: ASME BPVC, SECTION IX, 2007 EDITION, 2008a ADDENDA

Bend Type	FACE 1	FACE 2	FACE 3
Specimen Thickness (Inches)	.253	.253	.253
Bend Through (Degrees)	180	180	180
Pin Diameter (Inches)	1.012	1.012	1.012
Bend Test Results	Satisfactory	Satisfactory	Satisfactory

The services performed above were done in accordance with LTI's Quality System Program Manual Revision 18 dated 7/27/07 and ISO/IEC 17025. These results relate only to the items tested and this report shall not be reproduced, except in full, without the written approval of Laboratory Testing, Inc. L.T.I. is accredited by PRI to ISO17025 and by Nadcap for NDT and Materials Testing for the test methods and specific services as listed in the Scopes of Accreditation available at www.labtesting.com and www.eAuditNet.com. The results reported on this test report represent the actual attributes of the material tested and indicate full compliance with all applicable specification and contract requirements.

MERCURY CONTAMINATION: During the testing and inspection, the product did not come in direct contact with mercury or any of its compounds nor with any mercury containing devices employing a single boundary of containment.

NOTE: The recording of false, fictitious or fraudulent statements or entries on this document may be punishable as a felony under Federal Statutes.

Sherri L. Scheifele
QA Specialist

Sherri L Scheifele

By: _____
Authorized Signature

Certified Test Report

LABORATORY TESTING INC.
2331 Topaz Drive, Hatfield, PA 19440
Phone: 800-219-9095 • Fax: 800-219-9096

BNL001-09-05-15980-26

Accredited Nadcap™
Materials Testing Laboratory
Nondestructive Testing

SOLD TO
Brookhaven National Laboratory
Collider-Accelerator Dept.
Building 911A
Upton, NY 11973-5000

SHIP TO
Brookhaven National Laboratory
Collider-Accelerator Dept.
Building 911A
Upton, NY 11973-5000
ATTN: G. T. McIntyre

CUSTOMER P.O.
BNL-0000148742

CERTIFICATION DATE
6/18/2009

SHIP VIA
EMAIL & UPS

DESCRIPTION

Quantity: 1
Size: 1 3/16" x 4 1/2"
PO Line Item No.: 5
Drawing No.: 1242T00 126
Weld Type: No welding - material sample

Charpy V-Notch Impact testing at -320° F (77 Kelvin) was performed on (1) set of the submitted Test Specimen in accordance with Customer's Instructions with the following results:

LOCATION	PIECE NO.	(FT-LBS.) ENERGY	(INCHES) LAT. EXP.	(%) SHEAR
	1	3	.004	5
BASE METAL	2	3	.004	5
	3	2	.003	5

NOTE: Sub-size (9mm x 10mm) charpy specimens were used for above testing.

The services performed above were done in accordance with LTI's Quality System Program Manual Revision 18 dated 7/27/07 and ISO/IEC 17025. These results relate only to the items tested and this report shall not be reproduced, except in full, without the written approval of Laboratory Testing, Inc. L.T.I. is accredited by PRI to ISO17025 and by Nadcap for NDT and Materials Testing for the test methods and specific services as listed in the Scopes of Accreditation available at www.labtesting.com and www.eAuditNet.com. The results reported on this test report represent the actual attributes of the material tested and indicate full compliance with all applicable specification and contract requirements.

MERCURY CONTAMINATION: During the testing and inspection, the product did not come in direct contact with mercury or any of its compounds nor with any mercury containing devices employing a single boundary of containment.

NOTE: The recording of false, fictitious or fraudulent statements or entries on this document may be punishable as a felony under Federal Statutes.

Sherri L. Scheifele
QA Specialist

Sherri L Scheifele

By: _____
Authorized Signature

Certified Test Report

LABORATORY TESTING INC.
2331 Topaz Drive, Hatfield, PA 19440
Phone: 800-219-9095 ◆ Fax: 800-219-9096

BNL001-09-05-15980-27

Accredited Nadcap™
Materials Testing Laboratory
Nondestructive Testing

SOLD TO
Brookhaven National Laboratory
Collider-Accelerator Dept.
Building 911A
Upton, NY 11973-5000

SHIP TO
Brookhaven National Laboratory
Collider-Accelerator Dept.
Building 911A
Upton, NY 11973-5000
ATTN: G. T. McIntyre

CUSTOMER P.O.	CERTIFICATION DATE	SHIP VIA
BNL-0000148742	6/18/2009	EMAIL & UPS

DESCRIPTION

Quantity: 1
Size: 1 3/16" x 4 1/2"
PO Line Item No.: 6
Drawing No.: 1242T00 126
Weld Type: No welding - material sample

Charpy V-Notch Impact testing at -452° F (4 Kelvin) was performed on (1) set of the submitted Test Specimen in accordance with Customer's Instructions with the following results:

LOCATION	PIECE NO.	(FT-LBS.) ENERGY	(INCHES) LAT. EXP.	(%) SHEAR
	1	4	.004	5
BASE METAL	2	3	.004	5
	3	5	.005	5

NOTE: Sub-size (9mm x 10mm) charpy specimens were used for above testing.

The services performed above were done in accordance with LTI's Quality System Program Manual Revision 18 dated 7/27/07 and ISO/IEC 17025. These results relate only to the items tested and this report shall not be reproduced, except in full, without the written approval of Laboratory Testing, Inc. L.T.I. is accredited by PRI to ISO17025 and by Nadcap for NDT and Materials Testing for the test methods and specific services as listed in the Scopes of Accreditation available at www.labtesting.com and www.eAuditNet.com. The results reported on this test report represent the actual attributes of the material tested and indicate full compliance with all applicable specification and contract requirements.

MERCURY CONTAMINATION: During the testing and inspection, the product did not come in direct contact with mercury or any of its compounds nor with any mercury containing devices employing a single boundary of containment.

NOTE: The recording of false, fictitious or fraudulent statements or entries on this document may be punishable as a felony under Federal Statutes.

Sherri L. Scheifele
QA Specialist

Sherri L. Scheifele

By: _____
Authorized Signature

Laboratory Environment Safety and Health Committee
Safety Assessment Subcommittee

MINUTES OF MEETING 08-13

May 29, 2008

FINAL

Committee Members Present
D. Beavis
C. Conrad* (Secretary)
M. Gaffney **
R. Gill
W. Gunther (Acting Chairperson)
S. Hoey
H. Kahnhauser
S. Kane **
R. Karol
R. Lee
E. Lessard
J. Tuozzolo **

*** non-voting**
****Impaneled as Ad Hoc Member**

Committee Members Absent
N. Bernholc
R. Costa

Visitors
I. Ben-Zvi
P. Cirnigliaro
B. Hooda
G. McIntyre
M. VanEssendelft

Agenda:
1. **Review the Prototype Energy Recovery Linac (ERL) Draft Safety Assessment Document and Accelerator Safety Envelope**

Minutes of Meeting: Appended on pages 2 through 7.

ESH COMMITTEE MINUTES APPROVED:

[Signature on File] 6/16/08	**[Signature on File] 6/18/08**
W. Gunther Date	**C. Parnell Date**
Acting LESHC Chairperson	**ESH ALD**

Acting Chairperson W. Gunther called the meeting of the Laboratory Environment Safety and Health Committee (LESHC) Safety Assessment Subcommittee to order on May 29, 2008 at 3:10 p.m. The purpose was to review the Prototype Energy Recovery Linac (ERL) Draft Safety Assessment Document (SAD) and the Accelerator Safety Envelope (ASE).

1 Prototype ERL Draft SAD and ASE Review. The review of the prototype ERL SAD and ASE is part of the process for accelerator commissioning and authorization by DOE. The field work is done by another committee, the Accelerator Readiness Review (ARR) Committee, which is appointed by the laboratory Deputy Director of Operations. E. Lessard, R. Karol and D. Beavis abstained from voting as they helped develop these ERL documents. The overview of the science of the ERL was presented by I. Ben-Zvi. E. Lessard presented a general overview of the protections and layout of the ERL, and R. Karol presented a detailed discussion of the hazards and safety features of the ERL. The presenters and other attendees made the following points during the course of the presentation. [1]

1.1 The ERL is a different type of accelerator for C-AD, i.e., it doesn't hit targets or beams on beams and it uses electrons, not ions. The ERL is based on superconducting (SC) RF accelerator technology, which is the future of every accelerator that will be built, i.e., e-RHIC, NSLS, and LHC.

1.1.1 The ERL can be used to cool the gold ions of RHIC resulting in the luminosity increased by a factor of 2.

1.1.2 A new development is coherent electron cooling which is a novel approach. It will be proof-of-principle once the ERL is placed in the RHIC tunnel.

1.1.2.1 Coherent electron cooling takes the electrons and brings them into contact with the ions so that an imprint of the ion position is left on the electron. The electrons are taken out and an amplified charged density is created around each ion by using a free electron laser amplifier. The charge density can be amplified 100 times or more and boosts the cooling speed tremendously.

1.1.3 New technologies are needed for the ERL, i.e., the superconducting (SC) 5-cell RF cavity that is the heart of the ERL. The cavity recovers the energy of the returning electron bunches with very little power loss. Only 50 kW of input power is needed.

1.1.3.1 It is expected that the 5-cell cavity will be tested in August 2008.

1.1.3.2 The SC electron gun is being built which it is hoped will be tested in 2009.

1.1.3.3 The electron gun is a high-powered device, it can produce 2 MeV electrons at ½ amp and has 1 MW of input RF power supplied by a Klystron.

1.1.4 ERL construction will be completed in 2010.

1.1.5 The lifetime of the ERL as a standalone machine is estimated to be 1 or 2 years. It will be tested, evaluated, decommissioned, and then appropriate components moved to RHIC for electron cooling of the RHIC ion beams.

1.2 The prototype ERL is located in the corner of the northeast building addition (NEBA) of experimental building 912 (B912). The layout includes a concrete block house containing the accelerator within B912 with the control room in a trailer attached to B912.

[1] The presentation and these Minutes are posted on the LESHC website: http://www.rhichome.bnl.gov/AGS/Accel/SND/laboratory_environment,_safety_and_health_committee.htm.

1.2.1 The SC electron gun photocathode will be excited by a class IV laser. The released electrons will then be accelerated in the gun to about 2-3 MeV using RF produced by the 1 MW Klystron. The Klystron gets its power from a 1,000 kV power supply.

1.2.2 There will be a cryogenic system with the compressors located within B912 and in an outer building. This is used to cool down the SC RF gun and the SC 5-cell RF cavity.

1.2.3 The 2-3 MeV electron bunch exiting the SC gun will be accelerated to 20-22 MeV with RF in the 5-cell cavity, the single bunch then traverses the circular beam ring and returns to the 5-cell cavity out-of-phase by 180° allowing recovery of the bunch energy to the cavity making this recovered energy available for the next electron bunch acceleration. The bunch is then sent to a water cooled beam dump at 2-3 MeV.

1.3 The facility has to be designed to national design codes, such as the National Electrical Code and ASME Boiler and Pressure Vessel and Piping Codes. Federal Regulations 10CFR835 and 10CFR851, ANSI standards for lasers, and DOE Orders for Accelerator Safety, Quality Assurance, and Conduct of Operations have to be followed.

1.3.1 These codes are identified in the SAD to clearly document what standards the facility was designed to.

1.3.2 The ERL facility which falls in the definition of a Conduct of Operations facility, will have a separate document, "Prototype ERL Conduct of Operations Matrix", which shows how the ERL activities meet the DOE Conduct of Operations Order. This document has to be approved by DOE.

1.3.3 There will be a two-step ARR: first, the SAD and ASE have to be approved so that the ARR Team can approve the SC gun and SC 5-cell RF cavity (denoted as the G-5 test). Following this, there will be a full energy commissioning and an operations ARR by an independent team of experts. Based on these documents and the ARR team report, DOE approves commissioning, then approves operations of the Prototype ERL.

1.4 An overview of the SAD and ASE was presented. The SAD followed the requirements in the Accelerator Safety Subject Area and uses the format in the prototype SAD linked to the LESHC webpage. The prototype SAD is based on the Accelerator Safety Order Guide, DOE G 420.2-1. The scope of the SAD is to provide a basic understanding of the mission of the prototype ERL and gives administrative and engineering controls so that the ARR Team has a roadmap to follow when they verify equipment and procedures are in place. The SAD also provides the basis for the ERL ASE requirements. The SAD is approved by BNL management and the ASE is approved by DOE.

1.4.1 The ERL is an accelerator as defined by DOE Order 420.2B since it creates a Radiation Area, i.e. more than 5 mrem/hour.

1.4.2 The Fire Protection features, reviewed by the BNL Fire Protection Engineer, includes among other features: a high sensitivity smoke detector in the ceiling of NEBA, the 100 kV transformers have over-current protection and their power is turned off automatically after a fire alarm signal at the ERL.

1.4.3 The Radiation Protection features, reviewed by C-AD's Radiation Safety Committee (RSC), include RSC approved fail-safe devices, i.e., interlocking door and chipmunks, shielding is designed to limit the annual dose to < 500 mrem, and the fault-dose protection system is designed to < 20 mrem per event in Controlled and un-posted areas.

1.4.4 ODH is a unique hazard in the ERL and the ODH calculations were reviewed and approved by BNL's Pressure and Cryogenic Safety Subcommittee (PCSS). The ODH protection features include: interlocks for the ODH ventilation fan start, ODH sensors and alarms, and the minimum oxygen concentration will be limited to > 16% with the fan in operation.

1.4.5 The Laser and RF Protection features, reviewed by the BNL Laser Safety Officer, include: RF radiation is contained in a waveguide or vacuum enclosure (like the cavities), the laser beam is transported in an enclosed pipe, and the laser operating procedures as defined in the SBMS will be followed.

1.4.6 The Over-pressure Protection Features which were reviewed and approved by BNL's PCSS include: the pressure vessels will be U-stamped, there will be relief valves/burst disks < 15 psig for vacuum vessels that can be backfill pressurized, and the pressure testing and weld inspections will be conducted by BNL's qualified personnel.

1.4.7 The Electrical Protection Features include: the use of nationally recognized testing laboratory (NRTL) or equivalent equipment, LOTO capability for all equipment and LOTO procedures, and a Kirk-key system for power supplies or access to the power supply room.

1.5 The Hazard Analysis was conducted to consider conventional, environmental, and radiation hazards.

1.5.1 The conventional hazards were controlled by existing methods and designs used over the last 48 years at the AGS/RHIC and include: work planning/experimental planning, consensus standards, committee and safety inspections, BNL's SBMS, PPE, and accountability rules. Specific analyses were done for the unique hazards of ODH and ozone.

1.5.2 The environmental hazards were considered and it was determined that soil activation is not possible due to the low electron energies. The cooling water system and air activation are negligible. Other environmental hazards are similar to those already controlled at C-AD. An Environmental Process Assessment will be completed for the ERL as part of the Department's Environmental Management System, the same as for other C-AD facilities.

1.5.3 The radiation hazards include: primary beam radiation and RF field emission X-rays, beam losses during routine/faulted operations causing doses outside the blockhouse shielding, labyrinths and penetrations, skyshine and release of very low levels of activated cooling water.

1.5.3.1 The dose rate from the water system will be << 1 mrad/h.

1.5.3.2 Each year of ERL operation, ~35 pCi/L ^{3}H are produced in the water and the DWS is 20,000 pCi/L. The machine is planned to be operational for about 25% of the year.

1.5.3.3 The annual radiation dose to workers from ERL operations and maintenance is estimated to be ~30 mrem/yr.

1.5.3.4 This may increase the innate cancer fatality risk (20%) to workers by 0.06% over a 50-year career assuming the linear no threshold model; there is no risk to the public.

1.6 The bounding assumptions for dose calculations listed in the ASE include: the electron energy limit of 3.5 MeV for the SRF electron gun, the power source of the SRF is limited to 1.2 MW for conservatism, although it is actually 1 MW, the electron energy limit of 25 MeV for the electrons in the ERL ring, and the power source for the SC 5-cell RF cavity is limited to 60 kW, although actually it is 50 kW.

1.7 The estimated maximum skyshine dose rate in the ERL control room from a 60 kW fault from the 25 MeV beam is 98 mrem/hr, but the dose from this fault is limited to 0.25 mrem by beam interlocking chipmunks.

1.7.1 If the chipmunks fail low, that is, below their internal keep-alive source, then the beam is tripped off; if power to the chipmunks fails, then the beam is tripped off.

1.8 An estimate of the ozone concentration from radiation induced air ionization assuming 6 inches of air around the water cooled beam dump and a beam power of 1.2 MW was made. The ozone TLV is 0.1 ppm

1.8.1 The beam dump enclosure would contain 7500 ppm ozone and, if this ozone were mixed with the accelerator block house volume, the block house would have 3 ppm ozone.

1.8.2 Low beam power studies during ERL commissioning will determine actual ozone levels. Appropriate controls will be developed as needed, such as ventilation and an inert atmosphere around the dump, and ozone monitors or ozone alarms.

1.8.3 If necessary, an Unreviewed Safety Issue (USI) addressing the ozone hazard will be attached to the SAD as an addendum.

1.9 The ERL block house and helium recovery building north of B912 have an oxygen deficiency hazard.

1.9.1 The assumptions for estimating the ODH at the ERL include: building volumes account for free volume only, ODH sensors trip at 18% decreasing oxygen concentration (as in RHIC), a 30-second delay exists for the ODH exhaust fan to start after the oxygen sensor trips, and as allowed by SBMS there is an assumption of instantaneous uniform mixing of the inert gas release with the room air.

1.9.1.1 If the ODH exhaust fans are unavailable, the ERL cannot operate.

1.9.2 The failure scenarios analyzed and estimated minimum oxygen concentrations are: (1) block house, nitrogen leak from a 1-inch copper line failure – 16.6% O_2; (2) block house with a 500 L LHe Dewar failure, and no exhaust fan – 10.8% O_2; and (3) helium recovery building with a helium line failure – 16.9% O_2.

1.9.2.1 The estimated minimum oxygen concentration for each of these scenarios allows the block house and the helium recovery building to be treated as ODH-0 areas.

1.9.3 The SBMS ODH control requirements will be instituted in these areas.

1.10 Some of the major radiation hazard controls include: design calculations and reviews, shielding, chicanes, Access Control System (ACS) (with interlocks, chipmunks, card readers, crash cords, visual/audible alarms for beam imminent), fences and posting, training, ALARA reviews, TLDs and digital dosimeters, and following BNL Radiation Control Manual and C-AD's Radiation Safety Committee criteria.

1.11 Some of the major electrical hazard controls include: following BNL's SBMS and C-A's OPM, design reviews, postings and barriers, LOTO, emergency off controls for power, training, PPE for operating electrical equipment or "working on or near", work permits, NRTL equipment or EEI inspections, work planning, and OHSAS 18001 management system.

1.12 Some of the major fire hazard controls include: fire hazards analysis, adherence to the Life Safety Code, NFPA and DOE Guidelines, alarms, detection, suppression, fire extinguishers, emergency lighting, Committee and Chief Engineer reviews of changes, training, safety inspections, work planning, and BNL Fire/Rescue Group response.

1.13 Some of the major environmental hazard controls include: beam tuning, training, safety inspections, work planning, BNL back-flow prevention, BNL Chemical

Management System, Adherence to Suffolk County Article 12, Pollution Prevention (P2), and ISO 14001 management system.

1.14 The Accelerator Safety Envelope discusses the accountability, limits for ionizing radiation at BNL, limits for ionizing radiation at the ERL, limits for engineered controls, and administrative practices.

- 1.14.1 Section 1 discusses accountability. If the ERL violates a requirement in Sections 1-4 of the ASE, it is a Reportable Occurrence and the ERL will be shutdown; violating (operating outside) a requirement of Section 5 would result in reviewing the violation and determining if a Reportable Occurrence is appropriate.
- 1.14.2 Section 2 discusses BNL safety envelope limits.
- 1.14.3 Section 3 discusses the ERL operational limits which will be: for the SRF gun is 1.2 MW input power and 3.5 MeV electron energy; for the ERL ring 10 MW electron beam power and 25 MeV electron energy; for the 5-cell cavity 60 kW input power; and for the beam dump 1.2 MW of electron beam power into the dump. The ACS and Fire Protection System must be functional during beam operations.
- 1.14.4 Section 4 discusses the engineered control limits; for example, ACS is tested in accordance with the RadCon Manual, area radiation monitors are tested annually, and radiological barriers are inspected annually.
- 1.14.5 Section 5 discusses administrative controls; for example, on-shift staff must be trained and qualified; work planning and control per C-AD OPM, and industrial hazards controlled as per BNL SBMS.

1.15 Quality Assurance follows the DOE O414.1C outline which is for non-nuclear facilities and discusses, for example, the program, personnel training and qualification, quality improvements, documents and records, work processes, design, procurement, inspection and acceptance testing, management assessment, and independent assessment.

1.16 Post-operations activities include stacking the shielding and re-using the beam components. The activated water will be evaporated.

1.17 At the conclusion of the formal presentation, a page-by-page review of the prototype ERL SAD and ASE was conducted and the Committee offered detailed comments:

- 1.17.1 The drawings in the draft SAD will be replaced with new drawings showing the current configuration. This new configuration will not impact the shielding analysis in the SAD.
- 1.17.2 The SRF gun dark current radiation levels will be verified (checked) with a survey.
- 1.17.3 The Fire Hazard Assessment of Bldg. 912 needs to be updated by the BNL Fire Protection Engineer, M. Kretschmann.
- 1.17.4 Page 71, Paragraph 1, Mention that shielding is in accordance with the design criteria of 10CFR835.
- 1.17.5 Page 76, Describe the minor effect on the computed dose rates and doses if the new 10CFR835 radiation weighting factors are used instead of the old 10CFR835 quality factors. It was noted at the meeting that because the neutron dose contributions are very small compared to the Bremsstrahlung gamma dose contribution, the effect is negligible.
- 1.17.6 Page 91, Regarding dual chipmunks, mention that if the dose rates are > 50 rem/hr, dual chipmunks must be used.

1.17.7 Page 115, Section 4.6.8, last line of second paragraph, Change "the following aspects are significant" to "the following aspects are examples of significant…"
1.17.8 Page 127, Second line, Change "All reasonable" to "All required".
1.17.9 Page 146, Second bullet, Reference that suspect metals will be recycled within BNL and will not be used as scrap.
1.17.10 Page 198, Check the wording in the BNL Safety Envelope Limits section,
1.17.11 Page 199, Correct the numbering of the sentences.
1.17.12 Page 201, This section may be modified and Fault Studies added.
1.17.13 Page 215, Remove Table A6-12, Qualitative Risk Assessment for ERL – Environmental-Activated Soil because the ERL will not activate the soil below the NEBA concrete floor.

2 The following motion was crafted by the Committee.

2.1 The Committee recommends approval of the Prototype ERL Draft Safety Assessment Document and Accelerator Safety Envelope subject to the following conditions:

2.1.1 Incorporate the detailed comments offered by the Committee during the page-by-page review (see 1.17.1-1.17.13).
2.1.2 Incorporate the editorial changes submitted by the Committee members.
2.1.3 Validate the assumption that the ODH exhaust fans will start no later than 30 seconds after the oxygen sensors detect 18% oxygen concentration.
2.1.4 Include in the SAD a description of the configuration of the ODH sensors and the ODH exhaust fans.
2.1.5 Insert the statement regarding the effect of using the new 10CFR835 neutron radiation weighting factors for the dose calculations in Chapter 4.
2.1.6 Add the Fault Study Results (Appendix 5) after the fault studies have been conducted. (See 1.17.12)
2.1.7 Submit the finalized SAD and ASE to the LESHC Secretary for verification of changes.

2.2 Recommendation for approval of the motion was made by S. Hoey.
2.3 Seconded by R. Gill.
2.4 The motion was approved by a vote of 8* in favor and none opposed. E. Lessard, R. Karol, and D. Beavis abstained.

3 The meeting was adjourned at 4:55 pm.

* This is the correct vote as verified with W. Gunther.

Prototype Energy Recovery Linac, Building 912

Safety Assessment Document

Revision 1
May 12, 2008

Contributors:

D. Beavis
I. Ben-Zvi
A. Burrill
R. Karol
V. Litvinenko
D. Lederle
E. Lessard
G. Mahler
M. Mapes
G. McIntyre
B. Oerter
D. Phillips
V. Ptitsyn
J. Reich
J. Scaduto
Y. Than
T. Rao
K. Yip
A. Zaltsman

Table of Contents Links

1. Introduction 10

1.1. Scope 10

1.2. Basic Understanding of Energy Recovery Linac Activities 10

1.3. Intentionally-Designed Protection Afforded the Public, Workers and Environment 20

1.4. Codes of Record 21

2. Summary/Conclusions 24

2.1. Results and Conclusions of the Analyses Provided In the SAD 24

2.2. Comprehensiveness of the Safety Analysis and Appropriateness of the ASE 24

2.3. Appropriateness of the Accelerator Safety Envelope 26

3. Site, Facility and Operations Description 27

3.1. Environment within Which the ERL Is Constructed 27

3.2. ERL Characteristics Related To Safety 27

3.3. Management Methods Used In Operating the Prototype ERL Accelerator Facility 28

3.4. Design Criteria and As-Built Characteristics of ERL, Supporting Systems and Components with Safety-Related Functions 34

DRAFT

3.5. Design Features That Exclude or Minimize Exposure to Hazards to As Low As Reasonably Achievable (ALARA) During Operation, Maintenance and Facility Modification 48

3.6. BNL, C-AD and ERL Organizational Structure 52

3.7. Administrative Controls for Routine Operation and Emergency Conditions 53

3.8. Critical Operational Procedures to Prevent or Mitigate Accidents 55

3.8.1. Emergency Preparedness 56

3.8.2. Configuration Control 56

3.9. Administrative Controls 56

3.10. Calibration and Testing 56

3.11. Radiological, Worker Safety and Environmental Programs 57

3.11.1. Examples of Pollution Prevention and Safety Improvement 61

Examples of pollution prevention and safety improvement at C-AD resulting from implementation of ISO 14001 and OHSAS 18001 include: 61

3.12. Records Management 61

3.13. Tests to Be Conducted At ERL 62

3.14. Test Equipment Design Criteria and Components Having Safety Functions 63

4. Safety Analysis 74

4.1. Identification of Potentially Hazardous Conditions from Radiation Associated With Operation 75

4.1.1. Unshielded Source Radiation Levels 80

DRAFT

4.1.2. Maximum Credible Dose Rates on Outside Surface of 48-Inch Concrete Shield..... 83

4.1.3. Maximum Credible Ozone Concentrations in the ERL Cave..... 92

4.2. Identification of Potentially Hazardous Conditions from Oxygen Deficiency..... 94

4.3. Identification of Potentially Hazardous Conditions from Electrical Energy..... 98

4.4. Fire Hazards..... 100

4.5. Industrial Hazards..... 101

4.6. Hazard Controls..... 101

4.6.1. Radiation Hazard Controls..... 102

4.6.1.1. Permanent Shielding and ALARA Dose..... 103

4.6.1.2. Radiation Detection and Radiation Interlocks..... 105

4.6.1.3. Control of Radioactive Materials and Sources..... 107

4.6.1.4. Portable Radiation Monitors..... 108

4.6.1.5. Personnel Dosimetry..... 108

4.6.1.6. Access Controls Systems..... 109

4.6.2. Control and Use of Hazardous Materials..... 111

4.6.3. Electrical Safety..... 112

4.6.4. Lockout/Tagout Program..... 112

4.6.5. Safety Reviews and Committees..... 113

4.6.6. Training..... 113

4.6.7. Personal Protective Equipment..... 114

4.6.8. Significant Environmental Aspects and Impacts..... 115

4.6.9. Hazard Reduction Associated With Waste Generation and Handling..... 116

DRAFT

4.6.10. Fire Detection, Egress, Suppression and Response 117

4.6.11. Routine Credible Failures 119

4.7. Evaluation of Potential Impacts to Workers, Public and Environment 120

4.8. Selection of Control Measures That Reduce Risks to Acceptable Levels 121

4.9. Listing Of All Credited Engineered and Administrative Controls 122

4.10. Description of the Maximum Credible Incident 123

4.10.1. Maximum Credible Fire Incident 123

4.10.2. Maximum Credible Electrical Accident 126

4.10.3. Risk Assessment to Workers, the Public and the Environment 127

4.10.3.1. Radiation Risks 127

4.10.3.2. Environmental Risks from Radiation 128

4.10.3.3. Fire Risks 128

4.10.3.4. Electrical Risks 129

4.10.4. Professional Judgment Issues 129

4.10.5. Methods Used in Evaluation of Radiological Hazards 130

5. Basis for Accelerator Safety Envelope 131

5.1. Connection between Engineered and Administrative Bounding Conditions and ASE ... 132

5.2. ASE Consideration for Routine and Non-Routine Operating Conditions 133

6. Quality Assurance 134

6.1. The Ten Management, Performance and Assessment Criteria of DOE O 414.1C 134

6.2. Quality Assurance (QA) Program at ERL 134

DRAFT

6.3. QA Activities That Impact Protection of Worker, Public or Environment 136

6.3.1. Personnel Training and Qualifications..... 136

6.3.2. Quality Improvement 137

6.3.3. Documents and Records 138

6.3.4. Work Process 139

6.4. QA Activities That Impact Accelerator Maintenance and Operations 140

6.4.1. Design 140

6.4.2. Procurement 141

6.4.3. Inspection and Acceptance Testing 142

6.5. Management Assessment..... 143

6.6. Independent Assessment..... 144

7. Post-Operations Planning..... 146

7.1. Structural and Internal Features That Facilitate Future Decommissioning/Dismantling 146

7.2. Operations Considerations to Minimize the Generation of Radiological and/or Hazardous Materials 147

7.3. Long-Term Records Management to Facilitate Post-Operations Activities..... 149

7.4. Waste Management of Radiological and Hazardous Material Generation During Post Operations Period 150

8. References/Glossary/Acronyms..... 151

8.1. List of Documents That Provided Supporting Information for the SAD 151

DRAFT

8.1.1. Accelerator Safety Implementation Guide for DOE O 420.2, Safety Of Accelerator Facilities, Office of Science, Department of Energy, May 1999. 151

8.1.2. Accelerator Safety Subject Area 151

8.1.3. C-AD Conduct of Operations Matrix 151

8.1.4. Collider-Accelerator Department Fire Hazards Analyses 151

8.1.5. Operations Procedure Manual for Collider-Accelerator Department 151

8.1.6. Radiological Control Manual 151

8.2. List of Acronyms 151

DRAFT

Appendix Links

Appendix 1, Shielding Analyses

Appendix 2, ODH Calculations

Appendix 3, C-A Department Shielding Policy

Appendix 4, Accelerator Safety Envelope

Appendix 5, Fault Study Results

Appendix 6, Qualitative Risk Assessments

Appendix 7, Cooling Water Activation

Appendix 8 Air Activation

Figure Links

Figure 1.2.a Prototype Energy Recovery Linac General Layout Inside Building 912 11

Figure 1.2.b Drawing of Prototype Energy Recovery Linac in Building 912 12

Figure 1.2.c Drawing of Prototype Energy Recovery Linac Enclosure and Ring 13

Figure 1.2.c Drawing of Prototype Energy Recovery Linac Laser, Klystron and Power Supply Rooms 14

Figure 1.2.d Drawing of Prototype Energy Recovery Linac Control Area and Nitrogen Storage Tank 15

Figure 1.2.e Drawing of Prototype Energy Recovery Linac Second Floor Level 16

Figure 1.2.f Drawing of Prototype Energy Recovery Linac Cooling Water Skid and Cryogenic Helium Recovery Areas 17

Figure 1.2.g Drawing of Prototype Energy Recovery Linac Helium Compressor Room 18

Figure 3.3.a Operations Programs for ESSHQ at C-AD 32

Figure 3.6 ERL Prototype Operations Organization 53

Figure 3.14.1.a Fire Protection System (Needs to be updated – only shows smokes) 70

Figure 3.14.1.b ERL Klystron Lead Shield Layout 72

Figure 3.14.1.c ERL General Shield Layout 73

Figure 7.2 ERL Prototype Cooling Water Process Flow Diagram 148

DRAFT

Table Links

Table 3.4 Initial Estimated ERL Cooling Water Heat Loads, Temperatures and Pressures

Table 4.1 Parameters of the Prototype ERL in Building 912

Table 4.1.2.a Dose Rates and Dose Outside of ERL Cave for 3.5 and 25 MeV Electrons

Table 4.1.2.b Skyshine Dose Rate Estimates from 25 MeV Beam Loss

Table 4.1.2.c Maximum Dose Rates and Fault Dose to Worker Near Penetrations

Table 4.2 Potential ODH Areas at ERL

Table 4.9.a Summary of Credited Engineered Controls

Table 4.9.b Summary of Credited Administrative Controls

DRAFT

1.Introduction

1.1. Scope

This document presents a basic understanding of the mission associated with the prototype Energy Recovery Linac (ERL) in Building 912, the protections that are afforded the public and the workers' health and safety, and the protection of the environment from radiological hazards associated with electrons.

1.2. Basic Understanding of Energy Recovery Linac Activities

The mission associated with the prototype Energy Recovery Linac (ERL) in Building 912 is to study the requirements for an electron accelerator that may later be used to increase the performance of the Relativistic Heavy Ion Collider (RHIC). Figures 1.2.a through 1.2.g show the general layout and the plan views of functional areas at the Prototype Energy Recovery Linac.

Figure 1.2.a Prototype Energy Recovery Linac General Layout Inside Building 912

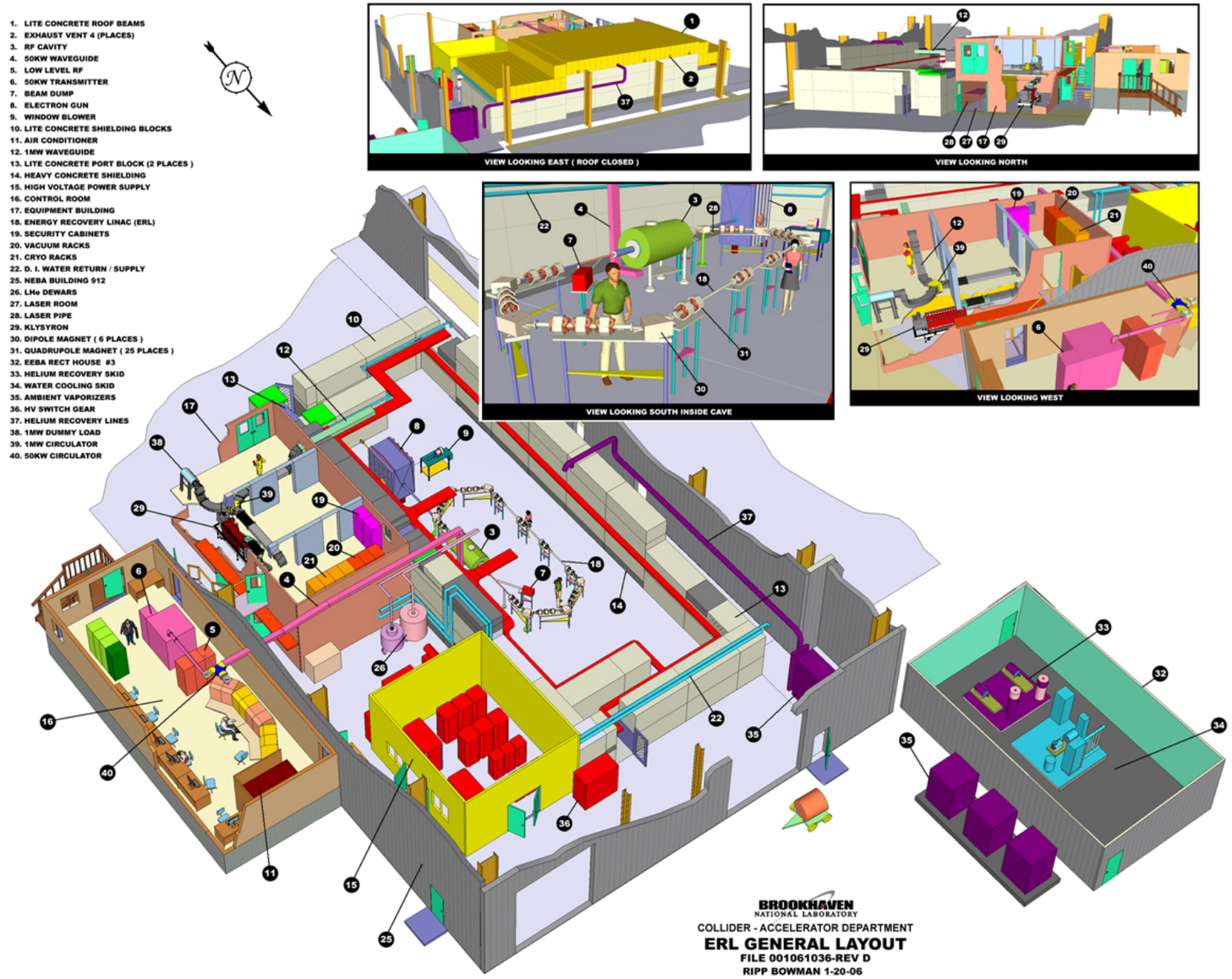

Figure 1.2.b Drawing of Prototype Energy Recovery Linac in Building 912

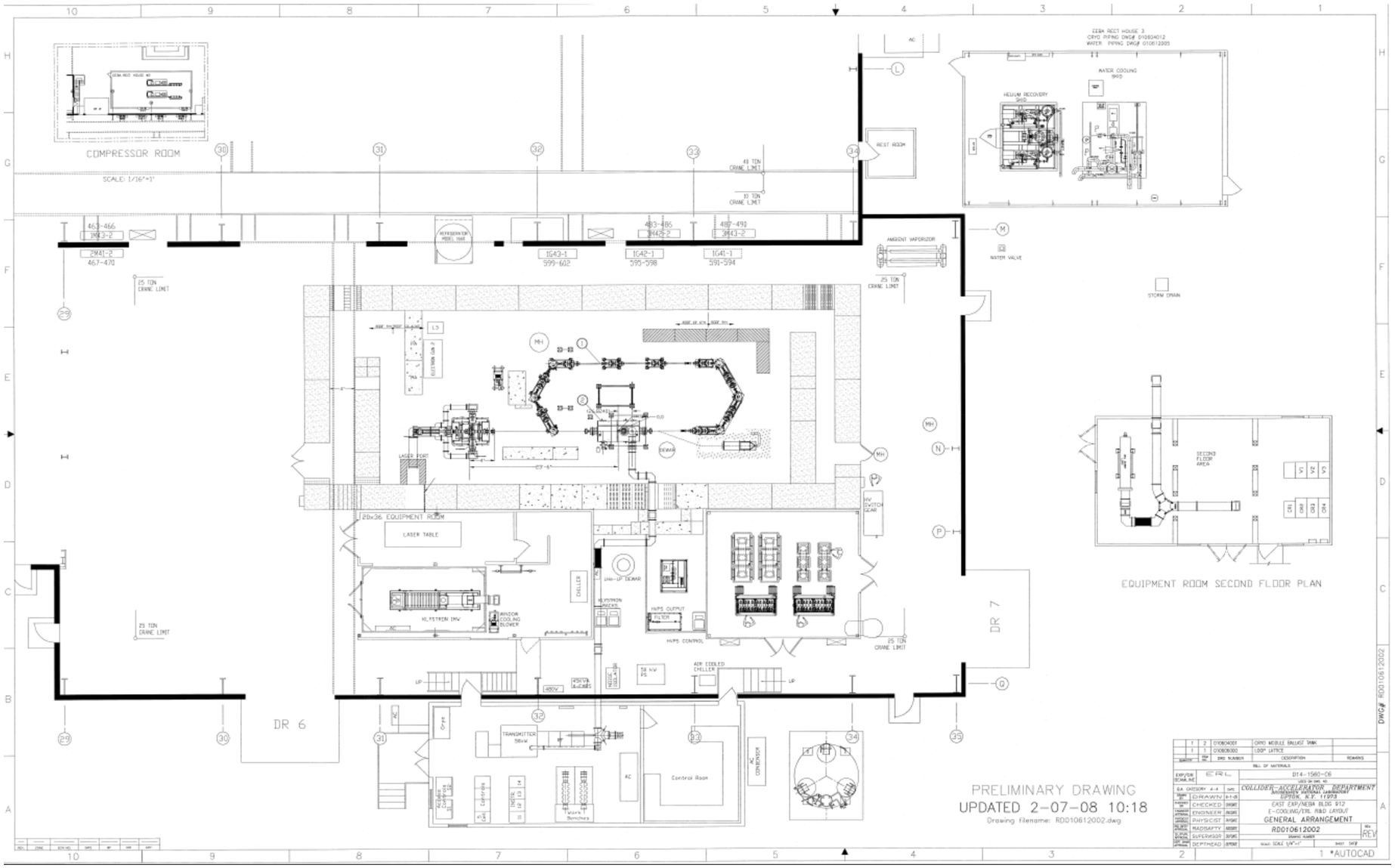

Figure 1.2.c Drawing of Prototype Energy Recovery Linac Enclosure and Ring

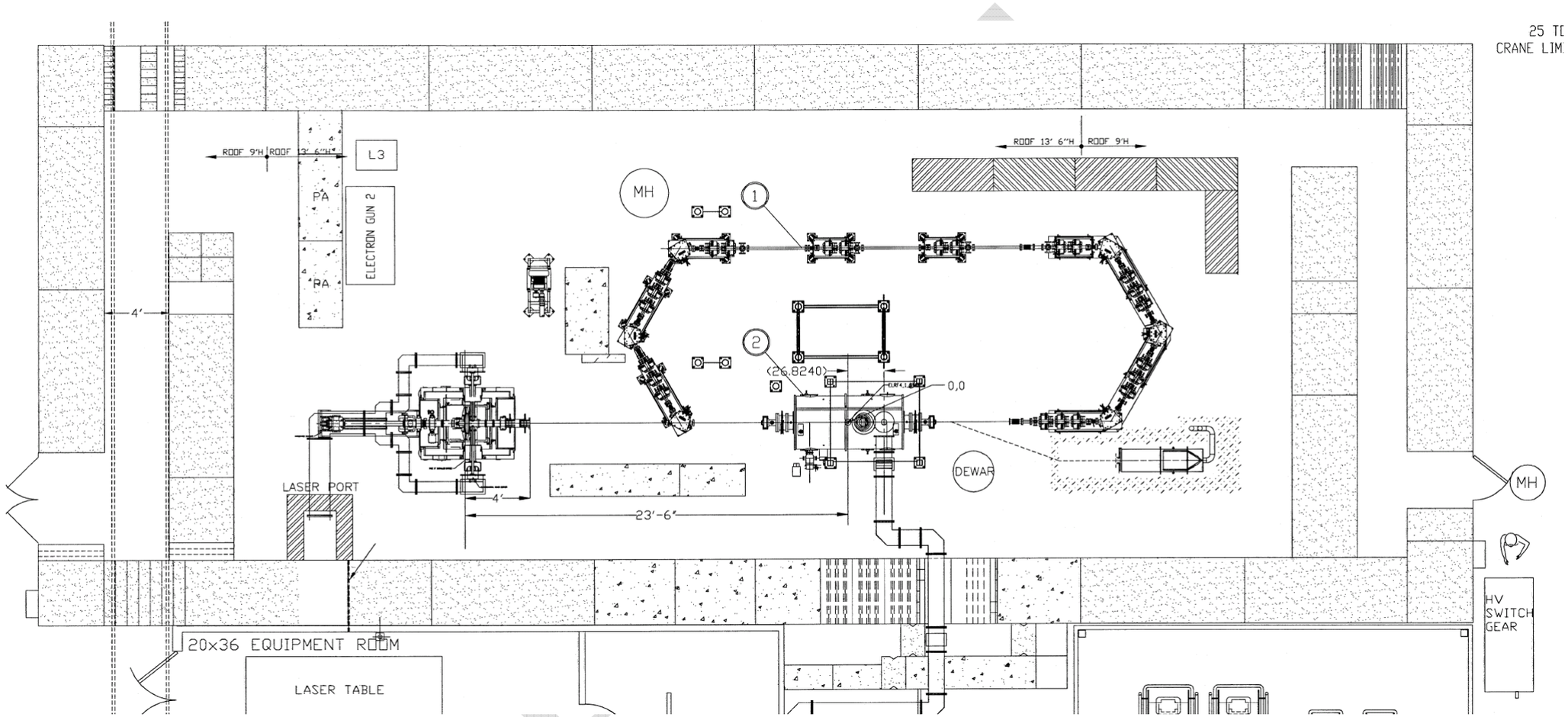

Figure 1.2.c Drawing of Prototype Energy Recovery Linac Laser, Klystron and Power Supply Rooms

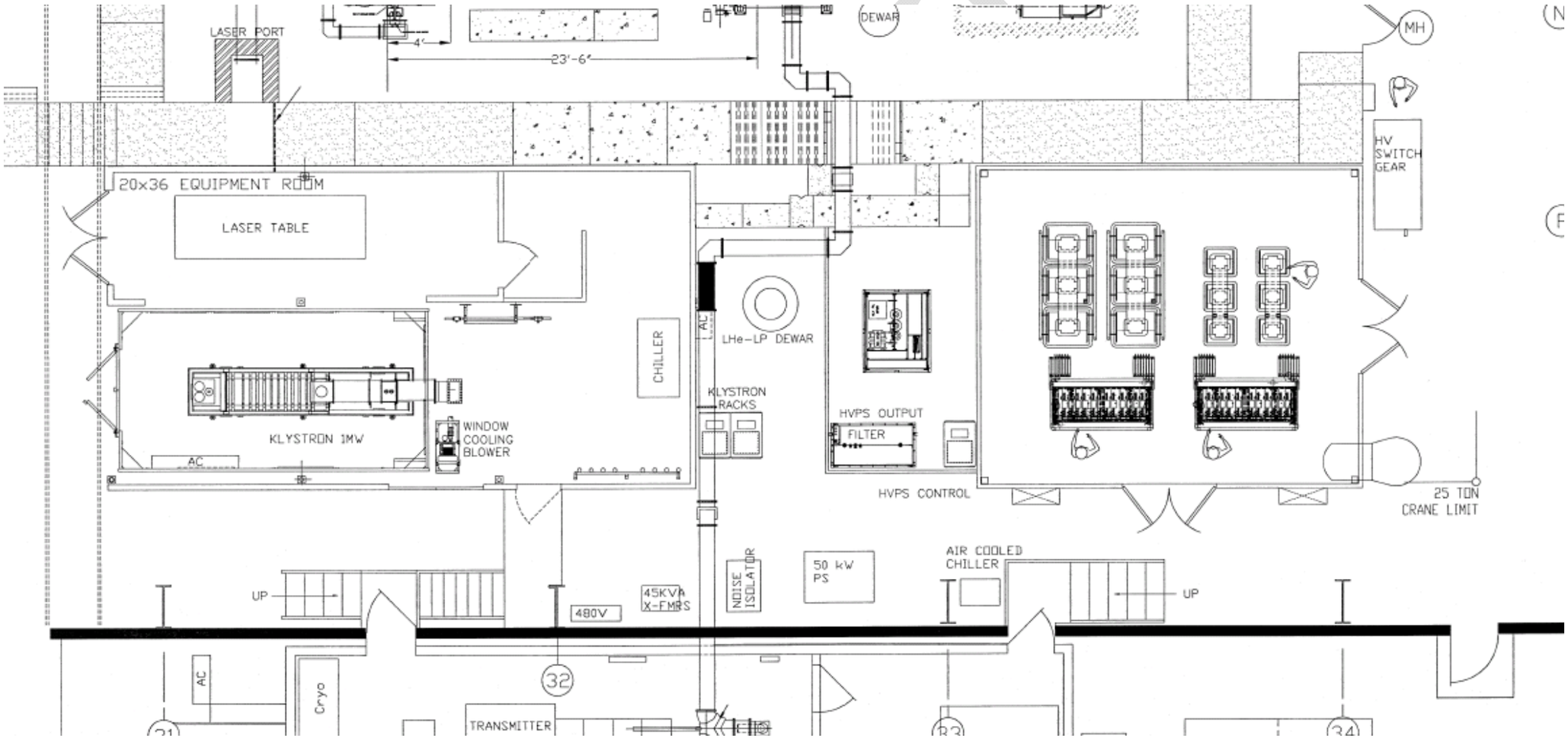

Figure 1.2.d Drawing of Prototype Energy Recovery Linac Control Area and Nitrogen Storage Tank

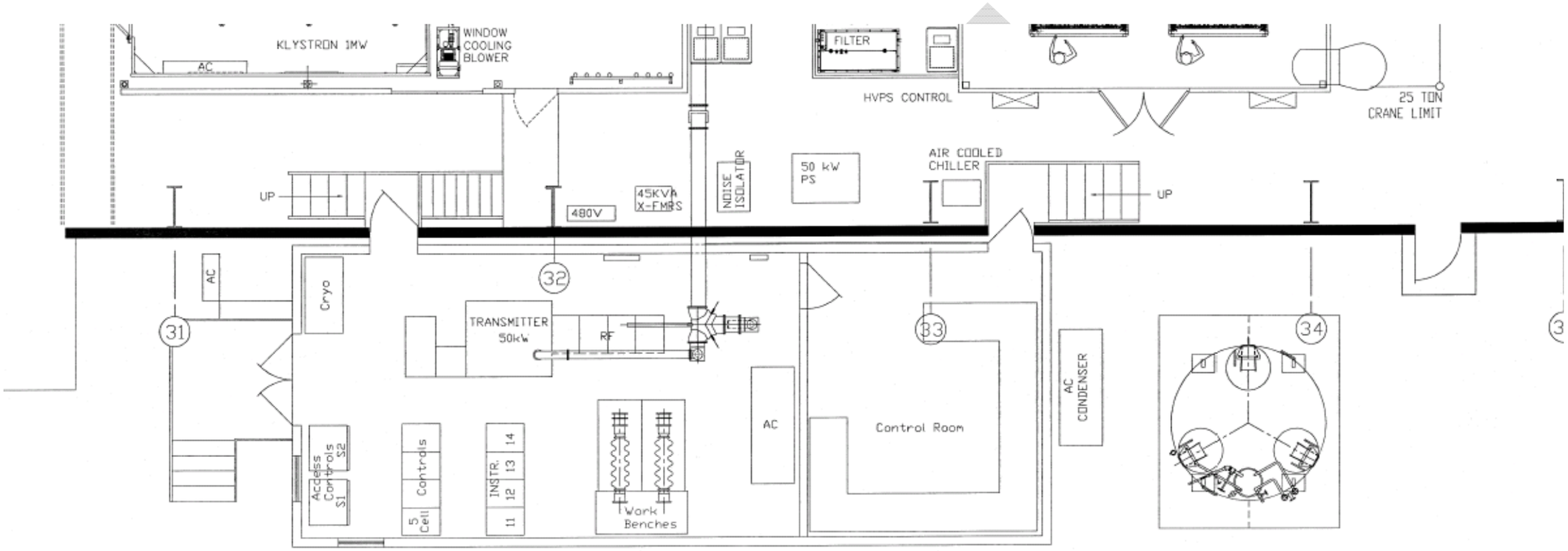

Figure 1.2.e Drawing of Prototype Energy Recovery Linac Second Floor Level

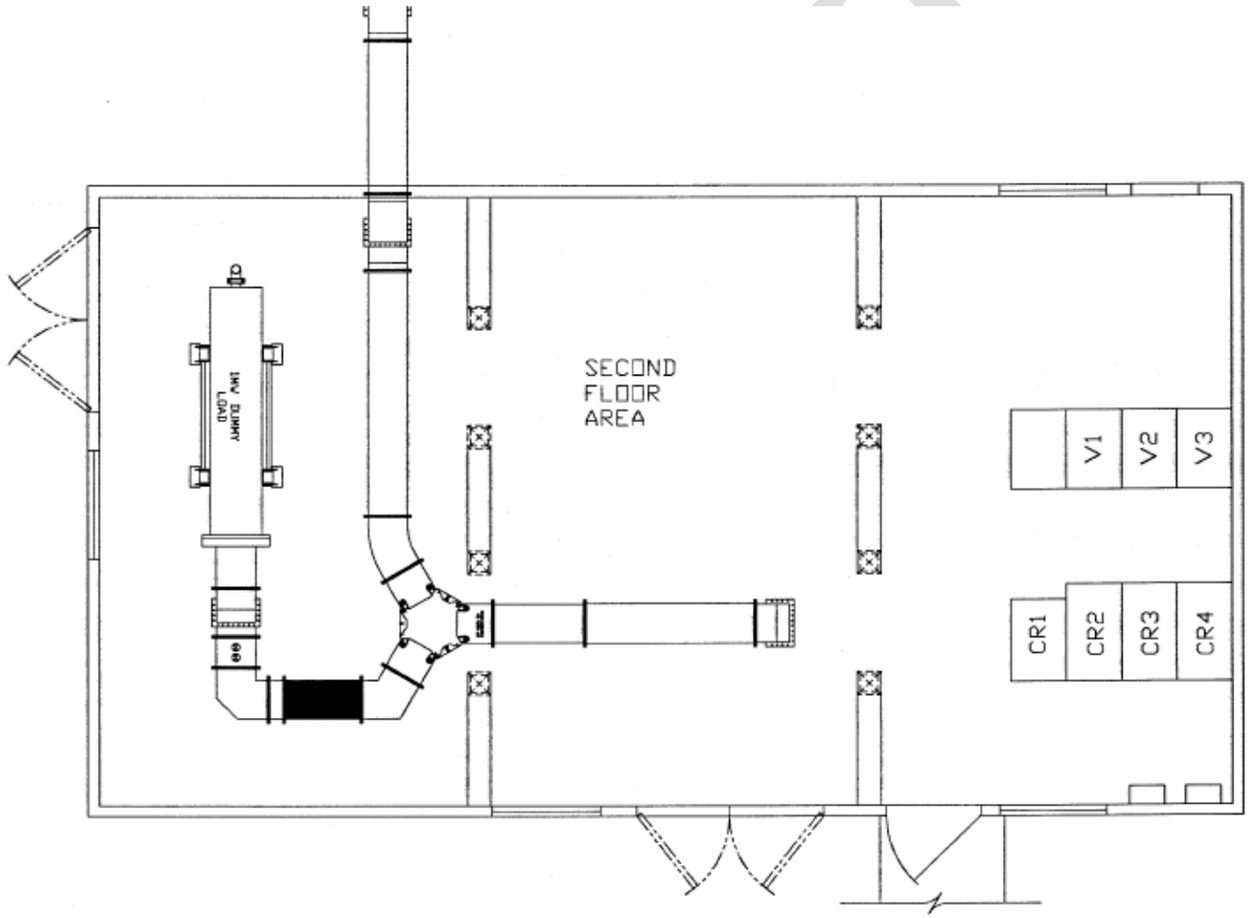

Figure 1.2.f Drawing of Prototype Energy Recovery Linac Cooling Water Skid and Cryogenic Helium Recovery Areas

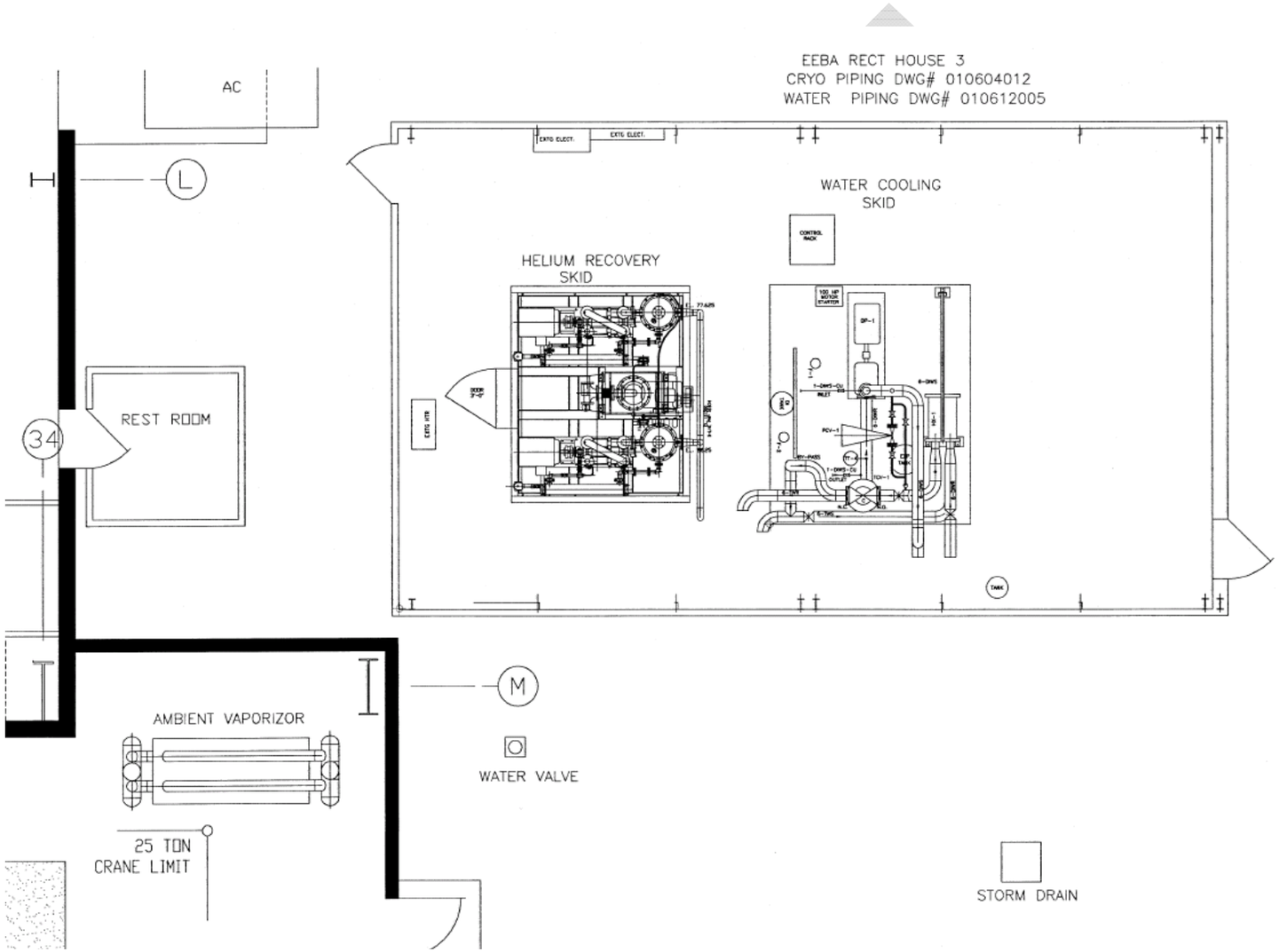

Figure 1.2.g Drawing of Prototype Energy Recovery Linac Helium Compressor Room

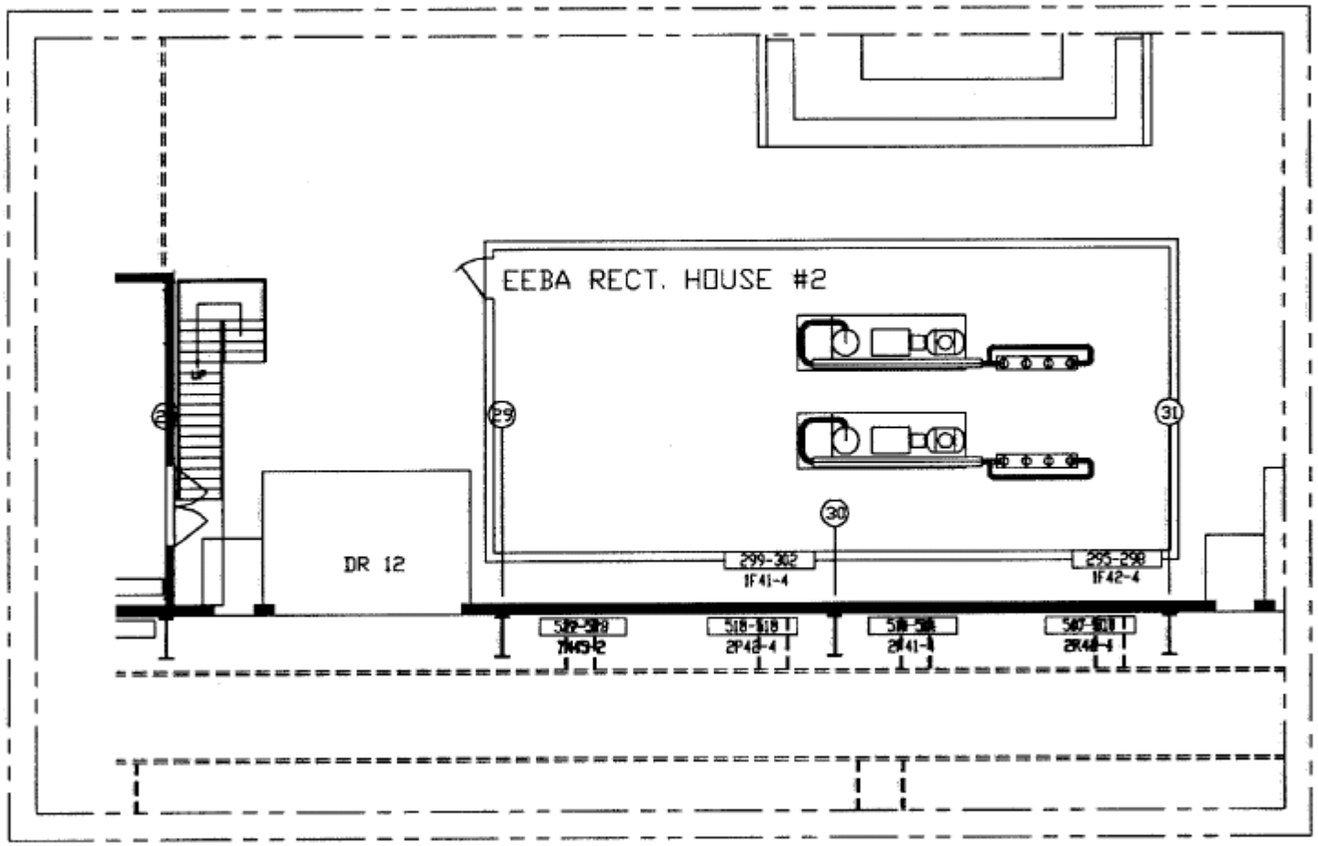

In RHIC, the ion-beam bunch size can be further reduced to maximize luminosity[1] at the intersecting regions. Reduction of the energy of the motion of a bunch, and thus reduction of the size of a bunch, is termed "cooling." Cooling requires some friction force, and the friction force must be added. The most common methods are stochastic cooling and electron cooling. Electron cooling is the method to be studied with the Prototype Energy Recovery Linac. This type of cooling will eventually be used to reduce the beam size in the RHIC ion storage rings. "Cold" electrons will be used to cool the "hot" ion beam. The result of cooling is a smaller beam size and a higher particle density, which leads to greater luminosity. It is estimated that increases in luminosity by a factor 10 will be achievable using electron cooling. Thus, collisions would occur at 10 times the present rate enabling physics processes to be studied that would otherwise be unachievable due to the practical constraint of time.

Electron cooling has been used in many ion rings before. However, the implementation of electron cooling in RHIC is more complicated than any existing cooler. RHIC's high beam energy requires electron energy of 55 MeV. While other coolers use a DC electron beam, the only way to make a cooling beam with 55 MeV is with a super-conducting Energy Recovery Linac (ERL). In order to verify out the eventual RHIC ERL design, the C-AD built a smaller prototype of the ERL in Building 912. This Prototype ERL in Building 912 generates and accelerates an intense, 100 mA or greater, electron beam with energy up to about 25 MeV. The

[1] Luminosity is expressed in units of $cm^{-2}\ s^{-1}$ or $b^{-1}\ s^{-1}$. Luminosity is an important quantity that characterizes performance. For RHIC, luminosity is directly proportional to the revolution frequency, the number of bunches in one beam, the number of particles in each bunch in yellow ring, and the number of particles in each bunch in the blue ring, and it is inversely proportional to the cross sectional area of the bunches. If the number of particles crossing each direction per unit time remains unchanged, then smaller bunch cross-sectional-area leads to greater luminosity.

energy recovery aspect is due to the fact that the electron beam decelerates to few MeV before being dumped, and most of its kinetic energy is recovered in an RF field. The overall plan is to test the concepts and stability criteria for very high current ERLs to be used at RHIC.

A brief description of the prototype system is as follows: An electron beam is created in a photo-cathode RF gun. At the exit of the gun, the electron energy is planned to be about 3.5 MeV. The beam is injected into a super-conducting RF cavity, and accelerated up to 25 MeV. The beam is then passed through a "ring" and again enters the RF cavity. The beam passes into the RF cavity with a 180 degree phase shift relative to the accelerating phase of the cavity and the beam is therefore decelerated. With beam energy reduced to electron gun injection energy (3.5 MeV), a dipole magnet deflects the circulating beam into the beam dump.

1.3. Intentionally-Designed Protection Afforded the Public, Workers and Environment

Engineered controls include the Access Control System, fire-protection system, fixed-location interlocking area-radiation monitors and ionizing-radiation shielding. Administrative controls include posting, fencing, training and qualifications for radiation workers and visitors. Additional administrative controls include personnel dosimeters, Radiation Work Permits and As Low As Reasonably Achievable (ALARA) reviews of jobs and experiments when needed.

Radiation surveys using portable radiation monitors are used to verify the radiological controls at ERL on a regular basis. The limit on the beam in the ERL is such that exposure to individuals in Controlled Areas and in uncontrolled areas is designed to be less than the annual

DRAFT

BNL dose limits that are listed in the Accelerator Safety Envelope (ASE). Specific ERL beam limits are reviewed by the C-A Department Radiation Safety Committee before operations, and are also listed in the ASE.

The Collider-Accelerator Department has embraced DOE's Integrated Safety Management System (ISM) as a basic protection for workers and experimenters. In order to guide operations and maintenance of the accelerator and associated systems at the Department level, an Administrative Control based on ISM and termed "Work Planning and Control" is used.

The BNL dose limits were derived from the administrative and engineered controls listed in 10CFR835 "Occupational Radiation Protection" and DOE Order 5400.5 "Radiation Protection of the Public and the Environment," which establish radiation protection standards, limits and program requirements for protecting employees and the public from ionizing radiation resulting from the conduct of DOE activities. These requirements are promulgated downward into BNL's RadCon Manual, and further into Departmental-level authorization documents and procedures.

1.4. Codes of Record

The following requirements are relevant to the ERL Prototype and are used to establish safety for the workers and the public:

- Design Codes

DRAFT

  - National Fire Protection Association (NFPA) 70, ‘‘National Electrical Code’’ (2005)
  - NFPA 70E, ‘‘Standard for Electrical Safety in the Workplace’’ (2004)
  - American Society of Mechanical Engineers (ASME) Boilers and Pressure Vessel Code, sections II, V, VIII, IX and X. including applicable Code Cases (2004)
  - ASME B31 (ASME Code for Pressure Piping) as follows:
    - B31.3—2002—Process Piping (as applicable to the cryogenic system)
    - B31.9—1996—Building Services Piping (as applicable to the water cooling system)
- Consensus Safety Standards
  - ANSI Z136.1, ‘‘Safe Use of Lasers’’ (2000)
  - ANSI Z49.1, ‘‘Safety in Welding, Cutting and Allied Processes,’’ sections 4.3 and E4.3 (1999)
  - American Conference of Governmental Industrial Hygienists, ‘‘Threshold Limit Values for Chemical Substances and Physical Agents and Biological Exposure Indices’’ (2005)
  - BNL SBMS Subject Areas
- Federal Regulations
  - 10CFR835, Occupational Radiation Protection
  - 10CFR851, Worker Safety and Health Program
- DOE Orders
  - DOE Order 420.2B, Accelerator Safety
  - DOE Order 420.1A, Facility Safety, §§ 4.2 and 4.4

DRAFT

- DOE Order 414.1C, Quality Assurance
- DOE Order 5480.19, Conduct of Operations
- DOE Order 5400.5, Radiation Protection of the Public and the Environment
- DOE Order 450.5, Environmental Protection Program
- DOE Order 435.1, Radioactive Waste Management
- DOE Order 243.1, Records Management Program
- DOE STD-1020-2002, Natural Phenomena Hazards Design And Evaluation Criteria For Department Of Energy Facilities

DRAFT

2.Summary/Conclusions

2.1. Results and Conclusions of the Analyses Provided In the SAD

The ERL accelerator is a facility with negligible offsite impacts, with extractable beam that goes to a beam dump, two points of entry, one enclosure, multiple operators/users, and multiple active safety systems. In addition to being able to create radiation levels above 5 mrem/h, unique non-radiation hazards such as potential for oxygen deficiency (ODH) exist.

It is concluded that this accelerator is subject to DOE O 420.2B Accelerator Safety, and an Accelerator Safety Envelope for routine operations must be approved at the local DOE site office.[2] Additionally, according to Table 1 in the DOE Accelerator Safety Order Guide, the Safety Assessment Document and the Accelerator Safety Envelope are to be tailored, as needed, to address workplace/onsite hazards and demonstrate no more than negligible offsite impacts. These requirements are promulgated in BNL's SBMS Accelerator Safety Subject Area.

Off-site impacts or major on-site impacts are "negligible" due to the physical aspects of the Prototype ERL whereby it is dependent upon an external energy source; that is, electric power that can be easily terminated. The primary hazard is prompt ionizing radiation that is limited to regions where the beam is maintained and is in existence only when a beam is present.

2.2. Comprehensiveness of the Safety Analysis and Appropriateness of the ASE

[2] DOE Guide 420.2-1, 7-1-05, Table 1. Tailoring of Accelerator Safety Order Requirements

The Safety Assessment Document (SAD) for ERL Prototype areas is consistent with DOE Orders. The format for this SAD closely follows the prescription for an SAD given in the DOE Guide 420.2-1.

The smoke and heat detection system, ODH system and the access control system are identified as personnel-safety significant. The sprinkler protection system is designed to protect equipment to ensure timely continuity of the research in the event of a fire.

The shielding policy is clearly stated. Optimization methods are used to assure that occupational exposure is maintained ALARA in developing and justifying facility design and physical controls. Models used for dose rate predictions are described in the Safety Assessment Document and are verified against actual measurements.

Significant occupational safety and health aspects and environmental aspects are identified and adequate controls are described.

The Safety Assessment Document clearly identifies the safety and health aspects of all portions of the facility including the accelerator itself, beam transport components and the support facilities. The organizational structure and ESSHQ programs for commissioning and operating the ERL Prototype are adequately described.

DRAFT

2.3. Appropriateness of the Accelerator Safety Envelope

On the basis of the safety analysis documented in Chapter 4 of the ERL Prototype SAD, associated risk assessment forms in Appendix 6, and the negligible environmental impact of this facility, the Accelerator Safety Envelope (ASE) conforms to requirements set forth in the BNL SBMS Subject Area, Accelerator Safety.

DRAFT

3. Site, Facility and Operations Description

3.1. Environment within Which the ERL Is Constructed

The accelerator site location is characterized in the following paragraphs. Information addresses adjacent facilities that may impact ERL safety or operations. The treatment of site geography, seismology, meteorology, hydrogeology, and demography would be duplicative of analyses performed in compliance with National Environmental Policy Act (NEPA) documents and the C-AD SAD.[3] Thus, it is not repeated here.

3.2. ERL Characteristics Related To Safety

The specific ERL characteristics related to safety include:

- A formal conduct of operations program that uses procedures, work planning and authorizations for all work
- Safety features and safety markings on equipment (e.g., pressure relief valves, burst disks, ground-fault alarms, ventilation, UL marks, ASME code stamps, etc.)
- Safety limits and safety envelopes for routine operations
- Access to hazardous enclosures using interlocks for non-ionizing and ionizing radiation protection
- Access to hazardous enclosures using Kirk Locks and Lockout/Tagout for electrical protection
- Radiation shielding to control routine and fault levels of ionizing radiation

[3] C-AD Safety Assessment Document, http://www.rhichome.bnl.gov/AGS/Accel/SND/c-a_sad_and_ase.htm

- Magnetic field shielding and warnings to protect workers who have medical implants
- Configuration controls for ERL drawings and equipment locations
- Formal design reviews and formal safety reviews for either new equipment or modifications to existing equipment
- Containment of non-ionizing radiation, such as laser and RF, within enclosures
- Continuous monitoring and alarms for fire, smoke, ODH, water leaks and ionizing radiation
- Certified hoists, cranes and rigging equipment
- Materials, welds, welding inspections, and pressure tests for pressurized equipment that meets pressure safety requirements in 10CFR851
- Trained and qualified staff for accelerator operations and maintenance activities
- Testing and calibration of safety related equipment and monitors

These characteristics that are related to safety are described in more detail in the sections that follow.

3.3. Management Methods Used In Operating the Prototype ERL Accelerator Facility

The C-A Department is administered and organized to assure safe operation in accomplishing its mission. Its mission is to:

- Excel in environmental responsibility and safety in all department operations
- Develop, improve and operate the suite of accelerators used to carry out the program of accelerator-based experiments at BNL

DRAFT

- Support the experimental program including design, construction and operation of the beam transports to the experiments plus partial support of detector and research needs of the experiments
- Design and construct new accelerator facilities in support of the BNL and national missions.

In meeting its mission, the C-A Department is under a formal Conduct of Operations Agreement with the Department of Energy.[4] The documentation that is used to comply with this agreement is the C-A Department Operations Procedure Manual, called the Collider-Accelerator OPM, which specifies key procedures, chain of command, authorized personnel and other operational aspects.[5] Because it is capable of stand-alone operations, the Prototype ERL has a supplemental Conduct of Operations Agreement.[6] To take advantage of existing C-AD practices and systems, ERL procedures are in the C-AD OPM. The management that is used to assure that ERL personnel are qualified in safe operations is the C-AD management. ERL operations personnel are qualified via a training program, including formal examinations, to certify operational qualifications where appropriate.

Only authorized Department personnel operate the Prototype ERL. Direct daily supervision of shift operations is the responsibility of the on-duty ERL Operator in Charge. All Operators are authorized to shut down the ERL Prototype whenever an unsafe condition arises, or whenever they think that continued operation is not clearly safe. They are also authorized to take any other corrective safety- or environmental-protection-action as indicated in the Collider-Accelerator OPM. All scheduled operational-related maintenance is done with the authorization

[4] http://www.rhichome.bnl.gov/AGS/Accel/SND/conductofops.htm Conduct of Operations Agreements
[5] http://www.rhichome.bnl.gov/AGS/Accel/SND/procedures.htm Operations Procedure Manual
[6] ERL Conduct of Operations Agreement

DRAFT

of the ERL Operations Supervisor and the C-AD Maintenance Coordinator, with the work-control authorizations prescribed in the Collider-Accelerator OPM and with the knowledge of the on-duty ERL Operator in Charge.

The role, responsibility, accountability and authority statements (R2A2s) establish the expectations and duties of ERL managers and staff for carrying out the work consistent with external and internal requirements.[7]

Subject Areas are BNL documents that contain basic requirements and guidelines that apply to a broad group of staff across BNL.[8] Subject Areas were developed to support the implementation of national and consensus standards. In the case of the ERL Prototype, the basis for operations is defined in the Prototype ERL Conduct of Operations (ERL CO) agreement, the ERL Safety Analysis Document (ERL SAD) and the ERL Accelerator Safety Envelope (ERL ASE). Subject Area requirements, where applicable, have been flowed down into these documents.

ERL operations and maintenance procedures include task- or group-specific procedures that are used to implement C-AD management practices. The C-A ESSHQ Division ensures that ERL operations and maintenance procedures are current and that they are in conformance with Laboratory-level governing documents, such as the ERL SAD, and the DOE approved ERL ASE.

DRAFT

[7] https://sbms.bnl.gov/ R2A2 Subject Area
[8] https://sbms.bnl.gov/ Subject Areas List

The C-A ESSHQ programs that cover ERL operations are indicated in Figure 3.3.a. The Associate Chair for ESSHQ is a member of the C-A Department Chair's Office. The Associate Chair's roles are to implement new or revised environmental, waste, security, safety, health, training, human performance and quality programs, to inform personnel on the status of ESSHQ, to establish clear and complete safety-related communications practices and to maintain existing ESSHQ programs. The overall approach is to integrate ESSHQ requirements into all work using procedures and practices that are designed to ensure a safe and healthy environment.

DRAFT

Figure 3.3.a Operations Programs for ESSHQ at C-AD

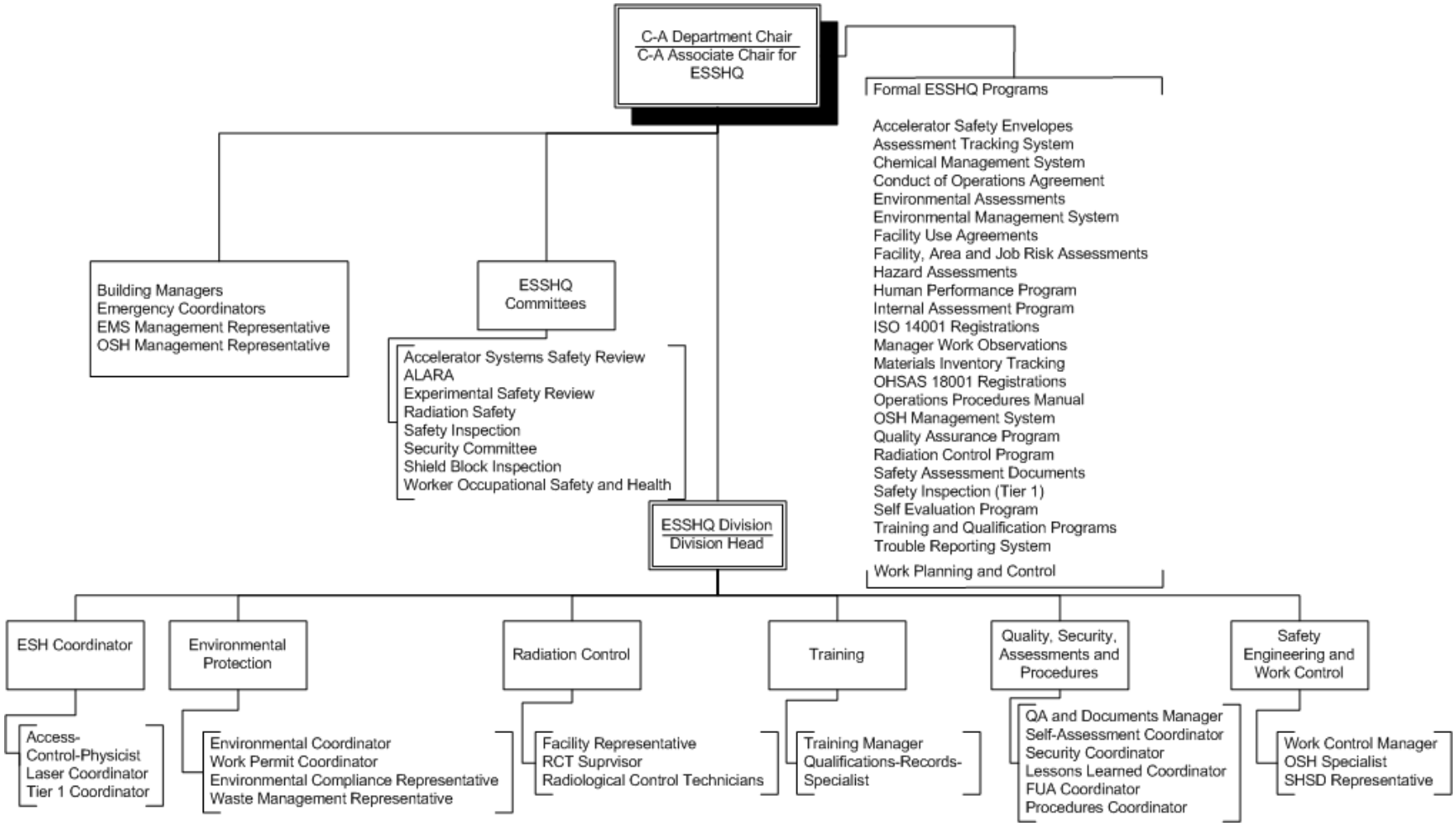

For DOE, "safety" encompasses safety, health and environmental protection including pollution prevention and waste minimization. DOE has identified five Core Functions to manage safety, and identified seven Guiding Principles for performing the five Core Functions. The management system that includes the five Core Functions and seven Guiding Principles is termed "Integrated Safety Management (ISM)" by DOE. BNL's management systems to implement ISM are located in the Standards Based Management System (SBMS).[9] SBMS is on-line with links to all referenced documents. The SBMS satisfies the contractual requirement for documenting ISM related practices lab-wide.

The C-A Department uses safety committees and ESSHQ staff to define the scope of the experiments or work, identify and analyze hazards and develop hazard controls. The ALARA Committee, Experimental Safety Review Committee, Accelerator System Safety Review Committee and Radiation Safety Committee meet requirements established in SBMS. These Committees are composed of members of the C-A Department, other BNL scientific Departments and members of the BNL ESHQ Directorate. These Committees operate under a system of formal procedures contained in the C-A Department OPM.

Self-assessment and self-evaluation are carried out by managers by using the annual Management Review practice and by using Manager Work Observations throughout the year. Individual employees use the C-AD work planning and Safety Walk programs for self-assessment. Project physicists and Liaison physicists use the C-A Department's Committees for project safety reviews and facility and experiment safety inspections. Formal procedures for

[9] https://sbms.bnl.gov/ Subject Areas List

conducting self-assessments and self-evaluations are listed in the C-A Department OPM. Assuring self-assessments are properly implemented is the purview of the C-AD QA Group. The C-AD QA Group also tracks corrective actions resulting from self-assessments and self-evaluations via the Assessment Tracking System (ATS).[10]

Third-Party Certification of Management Systems for ESH

The Prototype ERL in Building 912, by way of the C-A Department, employs third-party certification for its Occupational Safety and Health (OSH) management system (MS) and its environmental management system (EMS). The international OHSAS 18001 and ISO 14001 standards are consensus standards used for third-party certification of the OSHMS and EMS. Certification is the process by which a third party confirms, in writing, that an organization's management system meets the specified requirements in the standards. Successful certification means C-A Department's OSHMS and EMS meet all requirements in the international standards. The certification body is a third party (non-BNL) organization that assesses management systems. This certification body is often referred to as a "registrar."

In addition to annual surveillance audits, when the certificate of registration expires, which is every three years, the certification body conducts a complete reassessment.

3.4. Design Criteria and As-Built Characteristics of ERL, Supporting Systems and Components with Safety-Related Functions

[10] http://ats.bnl.gov/ Assessment Tracking System

DRAFT

Superconducting RF Cavity

The superconducting linac cryomodule (ERL cryomodule) is shown in the figure below. These components are installed in the ERL Prototype facility in Building 912.

The superconducting linac cryomodule is an assembly used to accelerate electrons in the ERL. Its main element is a niobium structure called a cavity. The niobium cavity is shown in the figure below. It comprises 5 cells, to obtain a repeating pattern of the electromagnetic field in order to get efficient acceleration. The cavity resonates at a frequency of 703.75 MHz with microwave power that is fed through a port called the Fundamental Power Coupler. When cooled to liquid helium temperature, the niobium cavity becomes a superconductor, reducing the microwave losses so that high fields (up to 20 MV/m) can be set up in the cavity using a few 10's of watts of RF power. Naturally, such high fields can lead to hazardous acceleration of electrons over short distances. The high fields also cause field emission of electrons from the surfaces of the cryomodule; electrons that are accelerated to various energies by these fields until they are stopped in their path, which then results in x-ray radiation.

The details of the cryomodule are shown in the next figure. The 5-cell niobium cavity assembly is enclosed in a titanium helium vessel. The cavity is equipped with a tuner, fundamental power coupler and beam pipes for bringing the electron beam in and out of the cavity. The beam pipes also serve as conduits for the non-fundamental microwave power generated by the beam passing through the cavity, what is called HOM (Higher Order Mode)

DRAFT

power. The HOM microwave power escapes the cavity due to the doorknob shape of the end pieces of the cavity, and is dissipated as heat in ferrite assemblies outside of and on either side of the cryomodule. The cavity is maintained at liquid helium temperature by liquid helium brought into the cavity's helium vessel through a 2 K main line. To reduce cryogenic losses the cavity system is enclosed in a vacuum vessel equipped with a thermal shield, comprised of a metal envelope covered by Multi-Layer Insulation (MLI). The cavity must be maintained in a low ambient magnetic field while being cooled down, and for this purpose, there are two magnetic shields enclosing the cavity.

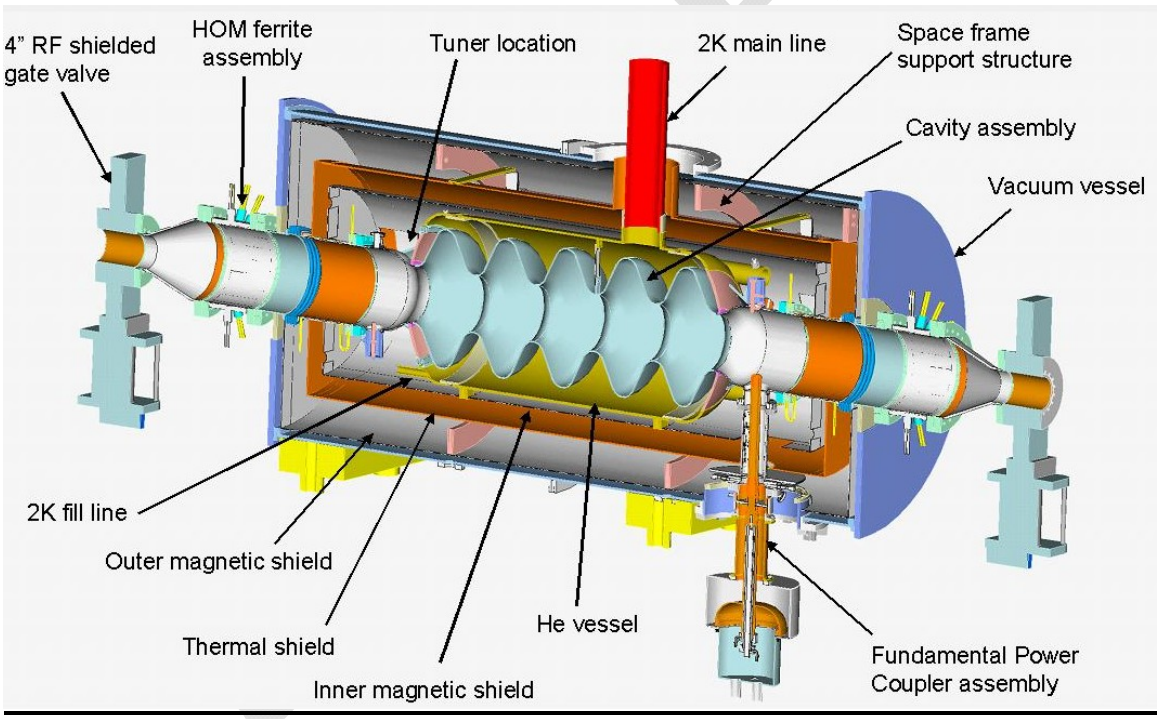

RF Systems for Superconducting Injector and Superconducting Cavity

The ERL accelerator consists of a high brightness RF superconducting electron injector followed by a superconducting linac cryomodule used to accelerate electrons. The microwave power used to accelerate electrons in the superconducting electron injector is provided to the cavity by a 1 MW RF klystron delivered via two 500 kW fundamental power couplers at a frequency of 703.75 MHz. The microwave power used to accelerate electrons in the superconducting linac cryomodule is provided by a 50 kW CW Input Output Controller (IOC) that also operates at a frequency of 703.75 MHz. The cavity resonates with microwave power fed through a port called the fundamental power coupler.

The exposure to non-ionizing RF radiation is controlled to prevent the radio frequency power generated by the klystrons from providing a source of personnel hazard. Personnel cannot be near the 1 MW klystron source during operations due to a coordinated key system preventing access to its enclosure. Personnel cannot be near the RF power at the load since it is inside the accelerator enclosure, which is interlocked during operation via the ERL PASS. Between the klystron and accelerator structures, the RF radiation is enclosed in a waveguide. Additionally, outside the waveguide, the RF power is confined to the vacuum enclosure of the klystron and accelerator structures, which provides a redundant safety protection feature near the load or near the source. A break in the vacuum integrity in either of these would remove the insulation required to continue generating RF power. Finally, the RF radiation contained within the system's waveguides would be surveyed as described in Subject Area: Radiofrequency/Microwave Radiation, and it will be confirmed that ambient RF radiation is

DRAFT

within the limits defined by the American Conference of Governmental Industrial Hygienists (ACGIH) and OSHA.

The emission of x-rays due to Bremsstrahlung from the 1 MW RF klystron is prevented via steel shield housing around the tube and tube base.

Injector System

The injector system for the ERL is shown schematically below. The injection system is made up of several major subsystems; the superconducting RF photoinjector, the cryogenic system, the cathode insertion device, and the RF system.

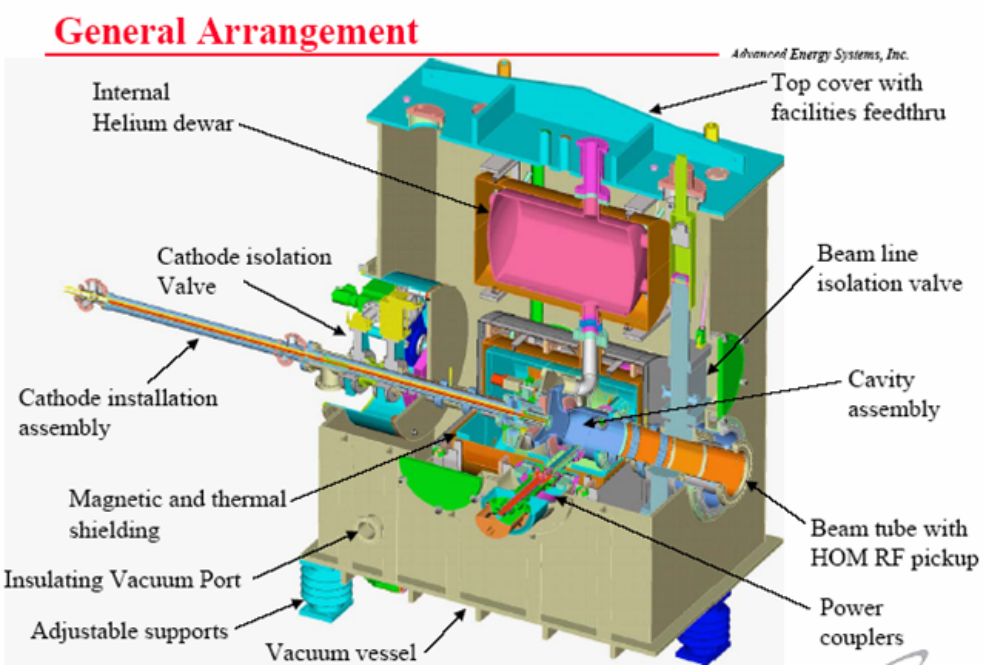

The photoinjector is an all niobium 703.75 MHz superconducting RF (SRF) cavity designed to operate at 2 K to produce and accelerate electrons. The microwave power to accelerate these electrons is provided to the cavity by a 1 MW RF klystron delivered via two 500

kW fundamental power couplers. As niobium is a superconductor at liquid helium temperatures, the surface resistance is effectively zero. This means that the microwave power fed to the cavity is almost exclusively delivered to accelerating the electrons, not heating of the niobium, allowing for CW high average current electron beam generation. This means that the 1 MW RF power can deliver a 0.5 A, 2 MeV electron beam to the ERL loop with minimal power dissipated to the liquid helium bath. During start up and conditioning, there may be dark current[11] generated in the injector.

The cavity is cooled to superconducting temperatures using 4 K liquid helium provided via external Dewars to the cryostat and internal helium reservoir shown in the schematic above. A large vacuum pump is then used to reduce the pressure over the liquid helium and thus reduce the temperature of the liquid helium to 2 K, the desired operating temperature.

The electrons are generated using a laser irradiated multi-alkali (CsK_2Sb) photocathode, which was produced in a custom deposition system designed to mate to the cathode installation assembly shown above. The laser system used to irradiate these cathodes is a Class IV laser system, with a repetition rate of ~87.75 MHz producing ~8 W of power in 10 ps pulses at 355 nm. The system consist of an oscillator locked to a master RF clock that drives the cavity, followed by a series of amplifier stages, pulse shaper/selector and harmonic crystals. The laser beam is transported to the photoinjector in enclosed beam pipes. The laser power will be low for initial alignment and increased gradually to full power.

[11] Dark current – relatively small current that flows through a photo-sensitive device even when no photons are entering the device.

DRAFT

Cryogenic Systems

In addition to the liquid nitrogen storage vessel and helium compressor room, the cryogenic systems include:

- Ballast tank - a liquid helium storage volume mounted above the 5 cell cavity; its purpose is to provide operational time at 2 K for the cavity
- 1.1 K Vacuum Pump - a vacuum pump for sub cooling the boiling liquid helium
- Warm Piping - ambient temperature piping associated with the ERL cryogenic system
- Transfer Line - cryogenic transfer lines to supply liquid helium to the 5 cell cavity
- Instrumentation - Pressure and temperature instrumentation and their associated I/O and hardware
- Insulating Vacuum System - Vacuum pump to maintain insulating vacuums
- Process Pressure Relief Valves – properly sized relief valves for the ERL cryogenic system

Non-stamped pressure vessels in the cryogenic systems were reviewed and approved by the Laboratory Pressure and Cryogenic Safety Sub-Committee. Specifically, the 5-cell cavity and the SRF gun were determined to be vacuum-rated pressure vessels that have the following equivalent protections, as per 10CFR851, since these vacuum vessels can be backfill pressurized in the event of failure:

- Design drawings, sketches, and calculations reviewed and approved by the Sub-Committee
- Qualified personnel performed examinations and inspections of materials, in-process fabrications, non-destructive tests, and acceptance tests

DRAFT

- Documentation, traceability, and accountability for each vessel including descriptions of design, pressure conditions, testing and inspection

These vessels are depicted in the following figures that show the 5-cell cavity with it's ballast tank and where burst disks have been installed to prevent these vessels from internally pressuring above 15 psig.

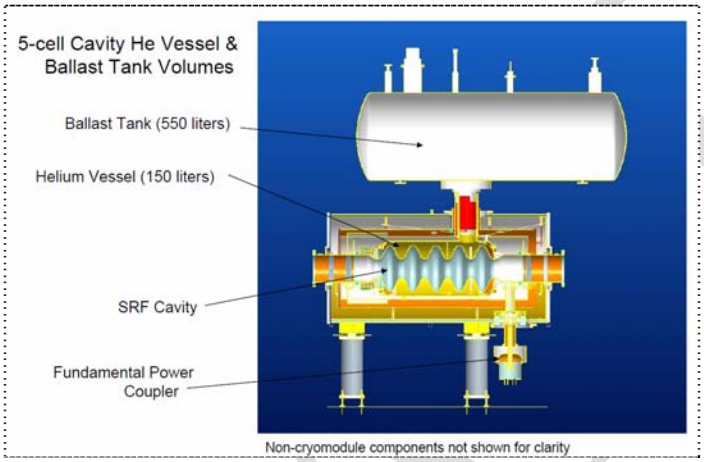

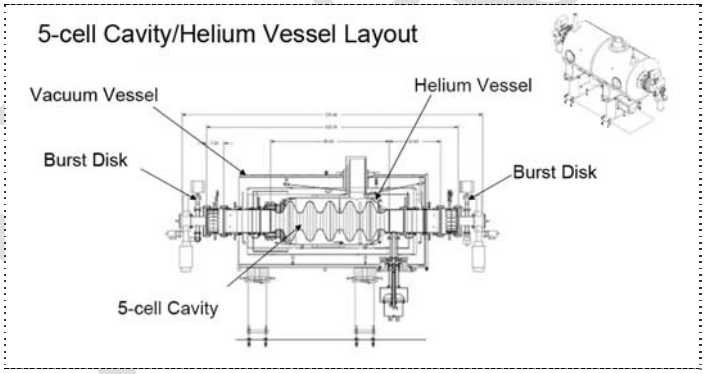

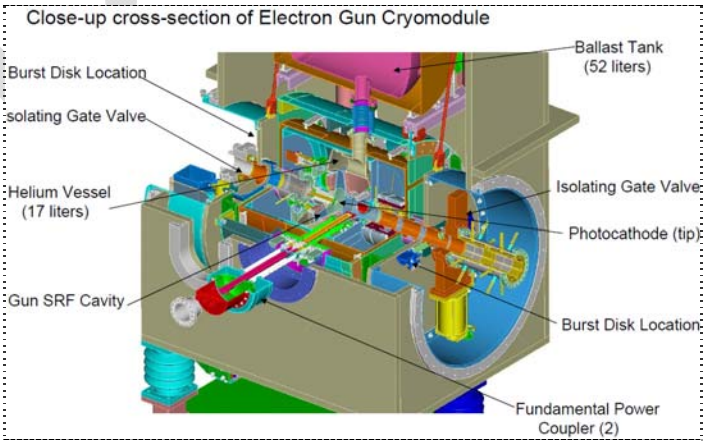

Vacuum Systems

The vacuum systems consist of:

- Vacuum Chambers - stainless steel and aluminum vacuum chambers and beam pipes for ERL loop vacuum system.
- Vacuum Pumps and Valves – high-vacuum pumps for ERL loop vacuum systems.
- Vacuum Monitoring And Control System - Vacuum gauges and control PLC and PC for ERL loop vacuum system.

Magnets and Magnet Electrical Systems

The ERL magnet systems consist of dipole magnets that force the electrons to move in a circle or arc, and quadrupole magnets that act like a lens focusing the electrons to the center of the beam pipe. The ERL magnet systems include 4 injection-line dipoles, 1 dump magnet, and the ring magnets. The ring magnets include 25 quadrupoles and 6 dipoles.

The electrical power for the accelerator is distributed at 480 volts AC, 3 phases with a high-resistance grounded delta system. The equipment that requires the 480 V AC line voltage input includes ring magnet, dump magnet and injection-line magnet power supplies. Magnet electrical systems include the DC cable for these power supplies. The installation and operation of the power distribution system and the magnet electrical system is in accord with standard industrial practice for this type of equipment. At C-AD, this includes a remote, alarming ground-fault monitoring system.

DRAFT

Electron Beam Dump System

As its name suggests, the beam dump is where electron bunches end up while depositing energy unrecovered by the 5-cell cavity. The beam will be spread on the surface of a water-cooled, cylindrically shaped copper electron beam dump. Dimensions of this beam dump are roughly 62" in length and 19" in diameter. Spreading the beam over this large area is done to ensure that local boiling of the cooling water does not occur. The beam will be spread over this large surface area by magnetic field coils.

Beam Instrumentation

Beam Instrumentation is functionally divided into subsystems; position monitors, current monitors, profile monitors, and loss monitors. The majority of the hardware and software is not available commercially off-the-shelf, but rather is designed and produced specific to the intended function. With the exception of loss monitors, all sensors are integral to the vacuum envelope. None of the subsystems are interfaced to the personnel protection system. The beam-loss monitors are interfaced to the machine protection system, as are the current monitors. As operational experience is gained, portions of additional subsystems may be interfaced to the machine protection system.

DRAFT

Controls System

The ERL control system is based on the RHIC controls system. The controls system allows three basic modes of operation:

- Commissioning: low duty factor, about 100 Hz rep rate, one bunch per pulse
- RHIC mode: 9.37 MHz operation
- Navy mode: 700 MHz continuous

As designed, the RF cavity can only accelerate one bunch without suffering a droop in cavity voltage. When that initial bunch returns to the cavity after one turn, out of phase, all but a small amount of its energy is recovered. This allows a new bunch to be accelerated with the recovered energy.

A work-console composed of standard 19-inch racks with writing shelf attachments are provided in the facility control room. Each of 3 "seats" is equipped with a Linux workstation and 4 flat-panel monitors, configured as a single continuous display resource. Rack space is provided at the console for the access control system panel display and key-tree.

General purpose and project-specific application software for operating and monitoring the equipment and beam characteristics is used. Simple software tools for device control, sequencing, data logging, comfort displays, alarms, and e-logging are used. In addition, the RHIC *post mortem* system, that comprises automatic data recording by front-ends and associated display and summary tools after an abort, has been adapted for ERL.

DRAFT

The residual energy of the beam after recovering most of the energy will be about 1 MW. The beam is spread across the face of the beam dump to prevent hotspots. A monitoring system monitors the spread and verifies proper operation as input to the fast-beam permit system; that is, a fast-beam inhibit response will be generated if beam spreading across the face of the dump fails.

Vacuum and water cooling monitoring for the dump is included in the vacuum and conventional systems. Beam current monitoring of the dump is provided by instrumentation. Beam-loss monitors consist of analog electronics, a comparator module and a channel by channel DC reference to monitor losses. All monitoring is interfaced with the fast-beam permit input.

Conventional Facilities

The conventional facilities service the needs of ERL with building space, environmental control (HVAC), cooling water, electric power, cable tray, radiation shielding, fire detection, rigging and survey services. Located inside the NEBA section of Building 912 is the 4-foot thick concrete "Block House", the Klystron Power Supply Building and a 2-story equipment building. The Block House requires rigging to open and close the roof to allow the larger pieces of experimental equipment to be installed or removed. The Klystron Power Supply Building was installed by an outside vendor. The equipment building houses security, vacuum and cryogenic control systems, magnet power supplies, a laser room and the Klystron. Outside of NEBA are the Experimental Control Room, two equipment buildings and Building 966, which is office and work space.

DRAFT

Cooling water System

The ERL Prototype cooling water systems meet ANSI B31.9 Building Services Piping Code for pressure piping. Materials, components and workmanship are in compliance with this code. The system does not operate with pressure relief valves; however, the pumps are sized so as not to increase system pressure beyond the allowable stress for the piping, even if the cooling water stops circulating and the pumps continue to operate. The closed cooling water loops are without reliefs in order to prevent the possible release of low-level activated water to the groundwater.

The cooling tower has more than enough capacity to remove heat generated by all ERL Prototype operations. It is noted that the heat exchanger on the DI cooling loop can be expanded to increase heat removal capacity if that loop requires it. The initial planned system loads are shown in Table 3.4; however, actual ERL Prototype operations will determine the need for system changes.

Expansion tanks in this system are not ASME certified however expansion tanks are rated for 150 psi and are located on the low-pressure side of the cooling water system, which is about 20 psi. The ASME Code for Boilers and Pressure Vessels stamp is not required since the water in the tank has a design pressure less than 300 psi and a design temperature less than 210 ^{o}F. On the other hand, design and testing of the expansion tanks conforms to the ASME Code even though the expansion tanks are not stamped.

DRAFT

Table 3.4 Initial Estimated ERL Cooling Water Heat Loads, Temperatures and Pressures

De-ionized (DI) Low Conductivity Water	Maximum Supply Temperature = 90 °F			
Component	Flow (gpm)*	kW Load**	Delta P	Delta T (°F)
Klystron Collector	385	650	10	11.5
1 MW Dummy Load	200	1000	5	34.2
Beam Dump	385	1000	10	17.8
50 kW Transmitter	20	80	50	27.3
50 kW Dummy Load	10	50	5	34.2
Chiller #1	50	55	10	7.5
10 Magnets @ 2kW each	20	20	50	6.8
Ferrite HOM (3)	15	20	50	9.1
FPC Gun (4 circuits)	5		50	
FPC 5-Cell (2 circuits)	5		50	
Solenoid Magnets (10 each at 2 gpm & 2 kW)	20	20	70	
He Recovery System	70	150	50	14.7
Total DI System Load	800	2045		17.5
DI System Capacity	820 gpm	1800 kW	120 psi	15 °F

* Klystron Collector and Beam Dump in series water flow.
**1000 kW heat load will either be at the 1 MW Dummy Load or at the Beam Dump.

Tower Cooled Components	Maximum Supply Temperature = 85 °F			
Component	Flow (gpm)	kW Load	Delta P	Delta T (°F)
DI Skid	800	2045	10	17.5
Tower Capacity	1000 gpm	3600 kW	200 psi	25 °F

Chiller #1	Maximum Supply Temperature = 86 °F			
Components	Flow (gpm)	kW Load	Delta P	Delta T (°F)
1 MW Circulator	20	50	70	17.1
Klystron Body 1	7	3.3	70	3.2
Klystron Body 2	7	4.8	94	4.7
Chiller #1 Load Total	34	58.1		11.7
Chiller #1 Capacity	45 gpm	60 kW	90 psi	9 °F

Air Cooled Chiller	Supply Temperature = 68 °F @ 6 kW Supply Temperature = 86 °F @ 7 kW			
Component	Flow (gpm)	kW Load	Delta P	Delta T (°F)
50 kW Circulator	7	2	87	2.0
Air Cooled Chiller Capacity	7 gpm	7 kW	90 psi	7 °F

3.5. Design Features That Exclude or Minimize Exposure to Hazards to As Low As Reasonably Achievable (ALARA) During Operation, Maintenance and Facility Modification

Superconducting RF Cavity

- Design reviewed by the C-AD Radiation Safety Committee
- Design reviewed by the BNL Cryogenic and Pressure Safety Committee
- Compliance with ODH Subject Area
- Burst disks and relief valves
- Access to area controlled with door interlocks
- Radiation shielding for beam loss and Bremsstrahlung
- Magnetic field shielding
- Configuration controlled drawings
- RF contained within vacuum enclosure

RF Systems for Superconducting Injector and Superconducting Cavity

- Design reviewed by the C-AD Accelerator Systems Safety Review Committee
- Access to area controlled with door interlocks
- RF contained within vacuum enclosure or cabinet
- 1 MW Klystron housed in steel shield to absorb Bremsstrahlung
- Configuration controlled drawings

Injector System

- Access to area controlled with door interlocks
- Protective housing for laser
- Laser beam transported in pipe
- Configuration controlled drawings

DRAFT

- Radiation shielding for Bremsstrahlung
- RF contained within vacuum enclosure

Cryogenic Systems

- Design reviewed by the C-AD Chief Mechanical Engineer
- Design reviewed by the BNL Cryogenic and Pressure Safety Committee
- ODH Monitoring
- Ventilation
- Burst disks and relief valves
- Configuration controlled drawings
- The He tank: U-stamped[12]
- The LN2 tank: U-stamped
- Bulk oil tank: U-stamped
- Heat exchangers: U-stamped
- Oil removal demisters: U-stamped
- Carbon Bed: U-stamped
- Cryofab 1000 gallons liquid helium Dewar: U-stamped
- 1660S helium plant coldbox: BNL Pressure and Cryogenic Safety Sub-Committee reviewed and accepted since this vacuum space can be backfill pressurized
- Ambient vaporizer: U-stamped
- Ballast tank: U-stamped

Vacuum Systems

- Design reviewed by the C-AD Accelerator Systems Safety Review Committee

[12] U stamp – a mark that indicates the pressure vessels was designed and fabricated according to regulations called out in 10CFR851.

DRAFT

- Design reviewed by the BNL Pressure and Cryogenic Safety Sub-Committee where the vacuum space can be backfill pressurized
- Allowable compressive stresses calculated using ASME Pressure Vessel Code

Electrical Systems

- Designs reviewed by the C-AD Chief Electrical Engineer
- Designed in compliance with NFPA 70 and NFPA 70E
- Ground-fault alarm system
- Lockout capability for all energized equipment
- NRTL or equivalent rated equipment
- Equipment and cable tray bonding and grounds
- Enclosures or barriers over conductors
- Kirk-key locks for power supplies
- Co-axial cables with grounded shields for high-voltage cables
- Component labeling system

Electron Beam Dump System

- Design reviewed by the C-AD Radiation Safety Committee
- Beam-dump temperature interlocks
- Access to area controlled with door interlocks
- Radiation shielding
- Configuration controlled drawings

Beam Instrumentation

- NRTL or equivalent rated equipment

DRAFT

Controls System

- NRTL or equivalent rated equipment

Conventional Facilities

- Certified hoists, cranes and rigging equipment
- Plant Engineering review and C-AD Chief Mechanical Engineer review of structures supporting heavy loads or structural changes to cranes or buildings
- Shielding requires lifting devices
- Cooling-water leak monitoring and alarms
- Fire, smoke detection and alarm systems
- Configuration controlled drawings
- Component labeling system

Access Control System

- Design reviewed by the C-AD Radiation Safety Committee
- NRTL or equivalent rated equipment
- Local and remote radiation alarms
- Configuration controlled drawings
- Annual system testing

Fire Protection System

- Fire Hazards Analysis
- Configuration controlled drawings
- BNL Fire Protection Engineer review
- Smoke detectors
- Sprinklers

DRAFT

- Fire alarms
- Annual system testing

3.6. BNL, C-AD and ERL Organizational Structure

The ERL organization (see Figure 3.6) is a sub-set of the C-AD organization and the complete C-AD organization chart can be found at the C-AD website. Responsibility for the safe and reliable Operation of the ERL resides with the on-duty ERL Operator in Charge, who resides in the ERL Control Room. The ERL Operator in Charge is the ERL Operations Supervisor for the operating personnel, and the focus for all operations related questions. Personnel that are responsible for the day-to-day operations of the ERL are members of the C-AD Accelerator Division, the C-AD Experimental Support and Facilities Division (ES&FD), and the C-AD Controls Division. Additional personnel who support the operations belong to the C-AD ESSHQ Division, the BNL ESHQ Directorate and the BNL Plant Engineering Division.

Regular meetings are held between the ERL Operations Supervisor, the MCR Operations Coordinator when the MCR crew is on-shift, the Deputy Superconducting Accelerator and Electron Cooling Group Leader and group members of the various operating groups to discuss operational problems and possible corrective actions, safety, and other matters of concern. Since the MCR Operations Coordinator and the ERL Operations Supervisor share operations resources, the chain of command goes through the MCR Operations Coordinator when MCR crew is on-shift. In this way, all C-AD operations resources during an exigent or emergency situation at ERL will be coordinated, and authority clearly established.

DRAFT

Figure 3.6 ERL Prototype Operations Organization

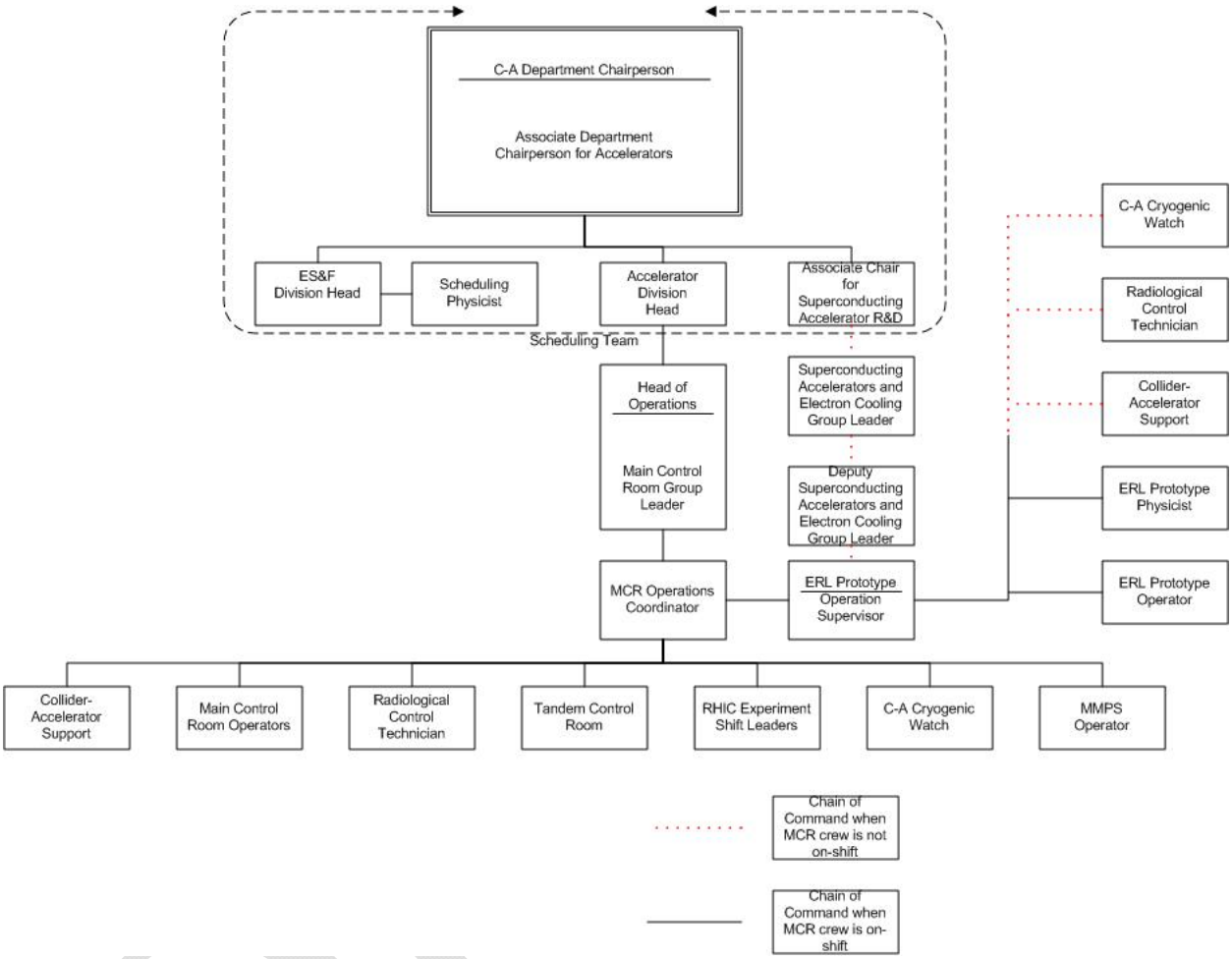

3.7. Administrative Controls for Routine Operation and Emergency Conditions

Administrative controls for routine operation and emergency conditions are the Radiological Protection Program, which provides a means of controlling the radiological exposure received by facility workers and restricts access to High and Very High Radiation Areas, and the Occupational Safety and Health Programs, which provide protection against:

- Non-ionizing radiation

- Hazardous or toxic materials
- Electrical energy
- Explosive gases and liquids
- Oxygen deficiency
- Slips and falls
- Rotating equipment
- Noise
- Thermal energy
- Cryogenic temperatures
- Protracted/irregular hours
- Natural hazards such as insects

Administrative controls, including procedures and training, provide for worker protection for the following aspects of work:

- To control access to the accelerator
- To protect workers from radiological hazards
- To ensure authorizations for work are employed
- To ensure work is reviewed for hazards and controls
- To ensure waste minimization and pollution prevention
- To provide for worker feedback
- To ensure the evacuation of workers outside as required in response to a fire alarm
- To ensure water samples are obtained in the event of a water spill
- To ensure abnormal events are reported to the C-AD management

DRAFT

3.8. Critical Operational Procedures to Prevent or Mitigate Accidents

C-AD specific procedures in the following areas are in place to reduce the potential for an emergency at ERL. The C-AD OPM has a search feature that may be used to easily find procedures on:

- Handling and disposing of hazardous waste
- Radioactive waste disposal
- Controlling liquid, airborne effluents
- Enhanced work planning
- Lockouts and tagouts
- Access control system testing, sweep and reset requirements
- Conduct of operations
- Control room activities
- Lockout Tagout
- Maintenance
- Personnel protective equipment
- Conduct of experiment procedures
- Safety review
- Self-assessment

DRAFT

3.8.1. Emergency Preparedness

Procedures were developed to help operators and workers respond in an emergency to reduce the potential for environmental impact and to take actions to mitigate the event. These procedures can be found in C-A OPM Chapter 3.

3.8.2. Configuration Control

Procedures were developed to help managers and engineers review technical changes to C-A drawings and to approve specifications for new equipment. These procedures can be found in C-A OPM Chapter 13.

3.9. Administrative Controls

Administrative controls are found in C-AD OPM Chapter 1: Policies for Authorization, Training, Environment, Safety, Procedures, Minors, Visitors and C-AD OPM Chapter 2: Conduct of Operations, Control Room Activities, LOTO, Maintenance, Work Planning.

3.10. Calibration and Testing

The C-AD OPM contains many procedures for calibration and testing. Most apply to the calibration and maintenance of measurement and test equipment used to verify conformance to prescribed high accuracy technical requirements during inspection, testing and research. However some procedures relate to calibration of safety related equipment, such as:

- ODH Field Calibration Procedure

DRAFT

- Equipment Calibration Procedures for Chipmunks (Area Radiation Monitors)
- Access Control System Test Procedures

Safety-related procedures in the OPM require literal compliance since deviation could trigger consequences that result in breaking the safety envelope of the accelerator or result in injury. Exceptions to literal compliance require review and written approval by the appropriate safety committee. Only the Department Chair or the Associate Chair for ESSHQ authorizes removal of safety related procedures from the OPM when such procedures are deemed no longer applicable.

3.11. Radiological, Worker Safety and Environmental Programs

The C-AD and ERL use several programs to enhance worker safety and create a safe workplace. These programs are described as follows.

Integrated Safety Management is DOE's framework to integrate safety and work. It protects worker, public and environment. It is based on the simple "Plan, Do, Check, Act" concept. The ISM has five core functions and seven Guiding Principles. The five Core Functions focus on work planning and control, and are:

1. Define the scope of work
2. Identify and analyze the hazards
3. Develop and implement hazard controls
4. Perform work safely within controls
5. Feedback and improvement

DRAFT

The seven Guiding Principles are DOE's core beliefs about managing safety and are as follows:

1. Line Management Responsibility For Safety - Line management is directly responsible for the protection of the public, the workers, and the environment.
2. Clear Roles And Responsibilities - Clear and unambiguous lines of authority and responsibility for ensuring safety shall be established and maintained at all organizational levels within the Department and its contractors.
3. Competence Commensurate With Responsibilities - Personnel shall possess the experience, knowledge, skills, and abilities that are necessary to discharge their responsibilities.
4. Balanced Priorities - Resources shall be effectively allocated to address safety, programmatic, and operational considerations. Protecting the public, the workers, and the environment shall be a priority whenever activities are planned and performed.
5. Identification Of Safety Standards And Requirements - Before work is performed, the associated hazards shall be evaluated and an agreed-upon set of safety standards and requirements shall be established which, if properly implemented, will provide adequate assurance that the public, the workers, and the environment are protected from adverse consequences.
6. Hazard Controls Tailored To Work Being Performed - Administrative and engineering controls to prevent and mitigate hazards shall be tailored to the work being performed and associated hazards.
7. Operations Authorization - The conditions and requirements to be satisfied for operations to be initiated and conducted shall be clearly established and agreed upon.

DRAFT

In addition to promoting these core functions and principles, DOE enforces health and safety requirements using two federal regulations: 10CFR851 Worker Safety and Health, and 10CFR835 Occupational Radiation Protection. The requirements in these regulations have been flowed down through BNL's hierarchy of documents and practices and into ERL's operating procedures and training programs.

The C-AD and ERL use four voluntary programs to help meet the requirements of the regulation, and to help implement the core functions and support the principles of ISM. These programs are:

- OHSAS 18001 Occupational Safety and Health Management Systems Specification
- ISO 14001 Environmental Management Systems Specification
- Manager Work Observation
- Human Performance

The OHSAS 18001 and ISO 14001 are third party certification programs. The certification process functions in the following manner. BNL selects a registrar to assess its ESH management systems. The certification body employs independent auditors to conduct the assessment. If the auditors determine that the occupational safety and health management system conforms to the international OHSAS 18001 standard, or the environmental management system conforms to the international ISO 14001 standard, then the certification body issues a certificate of registration. This information is made available to the public through a listing in a register or directory, and the C-A Department is entitled to display proof of certification. Certificates of registration are typically valid for three years. Certification bodies typically

DRAFT

conduct surveillance audits, essentially less-detailed assessments, on an annual schedule. When the certificate of registration expires, the certification body will typically conduct a complete reassessment, or conduct an assessment that is more comprehensive than the periodic surveillance audits.

Manager work observations are periodically performed by managers, safety specialists and workers. Manager work observation is a process that takes managers, safety specialists and workers at all levels into the work areas where they have some responsibility, to observe the work and to talk with each other about safety at the job site. Managers are expected to have brief discussions with employees regarding their specific tasks during a specific job. The objective is to improve safety by reducing risk and eliminating injury. The approach emphasizes positive, 2-way discussions in which participants learn and try to define safer ways to work.

Human performance, in its simplest form, is a series of behaviors executed to accomplish specific task objectives. Behavior is what people do and say—a means to an end. Behavior is an observable act that can be seen and heard. It can be measured. If it can be measured, it can be changed. In the nuclear physics business, the "end" is that set of outcomes manifested by the complex of accelerators—the safe, reliable, and efficient generation of particle beams. To improve accelerator performance, human performance must improve.

In this regard, people will make mistakes despite the best efforts. Studies have shown that humans make an error approximately once every 3000 times they perform the same task. Therefore, behavior and its causes are extremely valuable as the pointers/signals for

DRAFT

improvement efforts to anticipate, prevent, catch, or recover from errors. Excellent human performance leads to optimum accelerator performance partially by protecting the accelerator and personnel from the consequences of human error. To do so, a set of error-prevention practices are in place to anticipate, prevent, catch, and recover from human error. These practices are aimed at double checking and triple checking before a task is performed, which has the effect of reducing human error rates by two or three orders of magnitude.

3.11.1. Examples of Pollution Prevention and Safety Improvement

Examples of pollution prevention and safety improvement at C-AD resulting from implementation of ISO 14001 and OHSAS 18001 include:

- Over 1,000,000 person-hours worked without a lost-work day injury
- Savings of about 700 MW-hours per week of operations by improving efficiency of the cryogenics plant for RHIC
- Removal and disposal of PCB electrical devices
- Water use reduced by 25,000 gallons per month

3.12. Records Management

The ERL follows C-AD OPM 13.4.1 for Records Management, which in turn follows BNL's SBMS. The ERL Records Custodian is the C-AD Records Custodian. The applicable design specification, procurement document, operation procedure, inspection/test procedure, BNL management system, or SBMS Subject Area, or regulation specifies the records to be generated, supplied, or maintained by ERL. Examples of records to be maintained include:

DRAFT

- Fault Studies and Logbooks
- Engineering Change Notices
- Interlock Tests Records
- LOTO Records
- Work Permits
- Training Waivers
- Equipment Ready Checklists
- Safety Review Committee Records
- Maintenance Records
- Audit Results
- Critiques/Occurrence Reports
- Nonconformance Notices

These examples are not the exclusive records to be kept. The actual list is found in C-A OPM Chapter 13.

3.13. Tests to Be Conducted At ERL

This ERL R&D program has goals to demonstrate continuous wave (CW) operation with average beam current in the range of 0.1 – 1 ampere, combined with very high efficiency of energy recovery. The heart of the facility is a 5- cell 703.75 MHz super-conducting RF linac. The ERL provides a test-bed for testing issues of transverse and longitudinal instabilities and

DRAFT

diagnostics of intense CW e-beam. The ERL R&D program is pursued by C-AD as an important stepping-stone for increasing the luminosity of the Relativistic Heavy Ion Collider (RHIC).

Furthermore, the ERL R&D program extends toward a possibility of using a 10-20 GeV ERL for future electron-hadron/ heavy ion collider, eRHIC. The specific goals of the Prototype are to:

- Test the key components of the electron cooler
- Test the key components of high current Energy Recovery Linac based solely on superconducting RF (SRF) technology:
    - 703.75 MHz SRF gun test with 500 mA
    - High current 5-cell SRF linac test (one turn - 500 mA, two turns - 1 A)
    - Test the beam current stability criteria for CW beam currents ~ 1 A
- Test the key components and scalability for future linac-ring collider eRHIC with
    - 10-25 GeV SRF ERL for eRHIC
    - SRF ERL based FEL-driver for high current polarized electron gun
- Test the attainable ranges of electron beam parameters in SRF ERL

3.14. Test Equipment Design Criteria and Components Having Safety Functions

<u>Access Control System</u>

The Access Control System (ACS) for the ERL facility uses Programmable Logic Controllers (PLC) as the basis for decisions made by the system. In order to provide the required

DRAFT

dual independent protection, the area served by ACS has two independent PLC's (A and B divisions). Each division independently provides full protection. All the input/output devices (gate switches, critical devices, etc.) are redundantly monitored by both PLC systems. In addition, redundant monitoring of radiation level and ODH concerns was incorporated in the safety system.

The Operator in Charge interface utilizes touch screen displays (flat panels) on a command network that is connected through a firewall machine to the separate divisions.

The Department's 'classification' scheme for all radiological areas at C-AD defines the nature and extent of the access/beam control systems. The ACS prohibits access or limits the radiation dose when the radiological areas are accessed. Table 3.2.2.1 in the C-AD SAD delineates the access, enclosure and minimum system requirements, for each C-A Department 'classification,' and takes into account the potential levels of radiation during normal operations, and the potential increases in radiation levels with abnormal conditions.[13]

There are five basic design criteria for the ACS that applies to all C-A Department beam enclosures:

- Either the radiation is disabled or the related access control area is secured
- Only wires, switches, relays, programmable logic controllers (PLCs) and RSC approved active fail-safe devices are used in the critical circuits of the system
- The system is designed to be fail-safe

[13] C-AD Safety Assessment Document, http://www.agsrhichome.bnl.gov/AGS/Accel/SND/c-a_sad_and_ase.htm

DRAFT

- Redundant critical devices are used to disable the beam and redundant interlocks are used to secure the area if the dose equivalent rate can exceed 50 rem/h
- If a beam fails to be disabled as required by the state of its related access control area, then the beam is disabled upstream; that is, the access controls have backup or what is sometimes termed "reach-back"

The RSC reviews and approves changes to the ACS. They approve the critical devices and they establish the conditions that the ACS must monitor. For example, they approve electric current in beam elements, the position of moveable beam-components or the position of access gates. The RSC establishes the alarm level and interlock level for Chipmunk area radiation monitors that may be interfaced with the ACS.

During commissioning periods for new or modified accelerator facilities, radiation studies are conducted by the RSC to verify the adequacy of the shielding, access control and radiological area classification. These studies are termed "fault studies." That is, the calculated radiation levels are verified by direct radiation measurements, which confirm the appropriateness of the as-built ACS and as-built shielding, and the radiological area classifications inside and outside the facility.

DRAFT

Fire Detection System

Required fire protection design features are identified in the FHA. In many cases, various means are available to meet the general criteria required by the DOE Order 420.1. The following guidelines were used in selecting the appropriate protection methods:

- Wherever possible, passive protection methods are given preference over active systems; that is, passive fire rated or non-combustible construction, barriers and spatial separation are first reviewed for the ability to achieve the required level of protection before active suppression systems are considered
- Non-combustible materials are used wherever feasible to minimize the hazard
- Active suppression systems are provided where required by the referenced documents
- Wherever possible, wet pipe sprinklers are used, dry pipe for potentially freezing areas, and deluge for high challenge systems
- Alarm and detection systems are provided where required by the referenced documents; type of detection is based on the type of fire expected, and the need for sensitivity or fast response, to provide for rapid manual response or effective process shutdown to minimize damage
- Automatic Smoke Detection: Computer equipment rooms or areas that exceed the $250,000 limit established by DOE require smoke detection
- Automatic Sprinkler Protection: Computer equipment rooms or areas that exceed the $1,000,000 limit require sprinkler protection

DRAFT

- Fire Barriers: Where building Maximum Possible Fire Loss (MPFL) values exceed $50 M, buildings are subdivided into fire areas with an MPFL value less than $50 M; where this approach is not operationally feasible, redundant fire protection systems are provided
- For facilities where DOE orders or referenced code requirements cannot be met, the need to develop equivalent protection is identified

The Fire Hazards Analysis (FHA) for Building 912, which was performed by outside consultants before the ERL Prototype was constructed in the NEBA portion of the building, indicated sprinklers would be required for some ERL rooms and some proposed ERL equipment.[14] The sprinkler feed would be via a 4-inch feed already in the NEBA Building 912 area.

The FHA consultant defined the approximate total value of the equipment in the ERL area as $5 M since the experiment uses a high value klystron gun that operates at 20 amps and 100,000 volts. Associated with the klystron gun is a power supply that is also high value. In 2007 before the ERL was built, the FHA consultant indicated that parts of the ERL Prototype were to be protected with smoke detection; and a high-sensitivity smoke detection system was provided at the main ceiling above the ERL accelerator complex, but the control room area just outside the NEBA Building needed to be protected with automatic sprinklers and smoke detection.

[14] R. Wheeler, Hughes Associates, Inc., 3610 Commerce Drive, Suite 817, Baltimore, MD 21227-1652

DRAFT

Based on the FHA by the consultant and on a room-by-room analyses of ERL prototype with the BNL Fire Protection Engineer and ERL project management, the following fire detection and protection features for ERL were implemented:

- The smoke detectors in the high-voltage power-supply-room interlock power off if smoke is detected
- Transformers have over-current protection
- The two large 100 kV transformers just outside the power-supply room are filled with Envirotemp FR3 Fluid (fire-point is 360 ^{o}C)
- A total of 800 gallons of seed-based oil is used and it is biodegradable
- Sprinklers are placed above the two large 100 kV transformers
- The high-sensitivity smoke detector near the ceiling of NEBA Building 912 interlocks the power to the 100 kV transformers off upon detecting smoke
- The first-floor ERL chiller area room has sprinklers and smoke detectors turn off power to the 100 kV transformers
- The first-floor laser room has sprinklers and smoke detectors that transmit alarm signals
- The first-floor klystron room has sprinklers and smoke detectors turn off power turn off power to the 100 kV transformers
- The second floor of high-rise has sprinklers and smoke detectors turn off power turn off power to the 100 kV transformers
- The pump room has smoke detectors that transmit alarm signals
- The ERL Prototype control room has sprinklers and smoke detectors turn off power turn off power to the 100 kV transformers upon detecting smoke
- The fire-alarm annunciation at ERL turns off power to the 100 kV transformers

DRAFT

- A procedure for 'manual power turn-off in the event of a fire', was written for the ERL area and trained on by the Collider-Accelerator Support Group
- A combustibles-control-plan was written for the accelerator ring enclosure and trained on by the ERL Prototype operators
- The accelerator ring enclosure has smoke detectors that turn off power turn off power to the 100 kV transformers upon detecting smoke

A drawing showing the location of fire protection and fire detection devices is shown in Figure 3.14.1.

DRAFT

Figure 3.14.1.a Fire Protection System (Needs to be updated – only shows smokes)

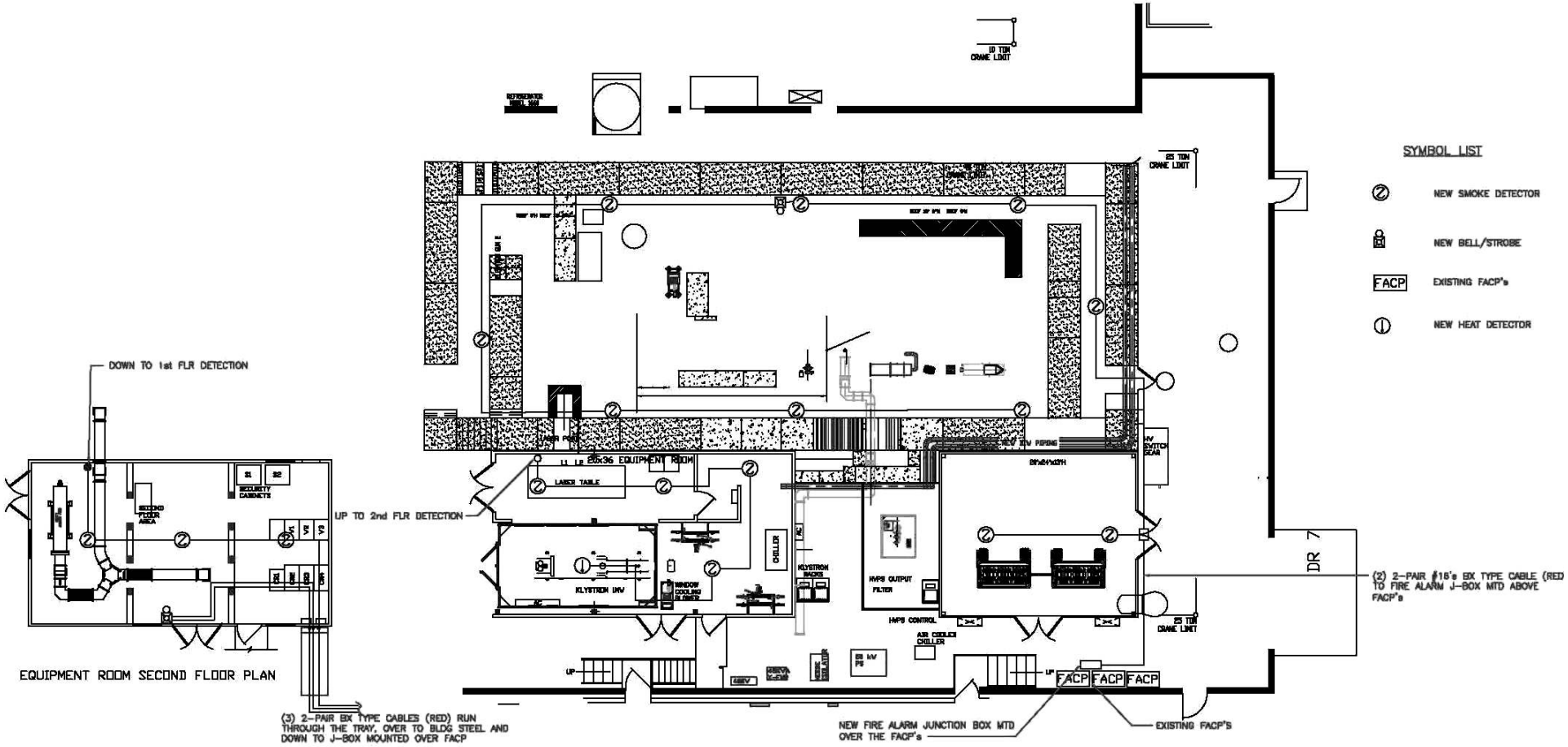

Shielding

The policy upon which ERL shielding was designed can be found in Appendix 3, C-A Department Shielding Policy. By adhering to the principles of this policy, ERL workers will not receive a planned exposure in excess of 500 mrem per year, or a fault exposure greater than 20 mrem. Prior experience at C-AD has shown that maintaining this policy for shield design results in workers actually receiving 10% or less of the planned exposure. This is largely due to work planning, conservative shielding design calculations, an active ALARA program and the fact that shield blocks come in standard sizes and thicker than calculated thickness is used in practice.

The general layouts of the important shields are shown in Figures 3.14.1b and 3.14.1c. Neutrons and photons are the predominant radiation outside the ring enclosure, and concrete is the predominant shield material. Bremsstrahlung radiation is the predominant ionizing-radiation-hazard associated with the klystron high-voltage tube, and the best shield for these lower energy photons is lead.

Penetrations and seams in the shielding will be studied during initial operations since these are the hardest features to predict accurately in terms of calculated radiation dose rates. Thus, the shielding in the layouts is "planned" as shown here. Based on measurements, anywhere unusual shielding features conspire to elevate radiation levels above the plan, then that shield will be improved.

Figure 3.14.1.b ERL Klystron Lead Shield Layout

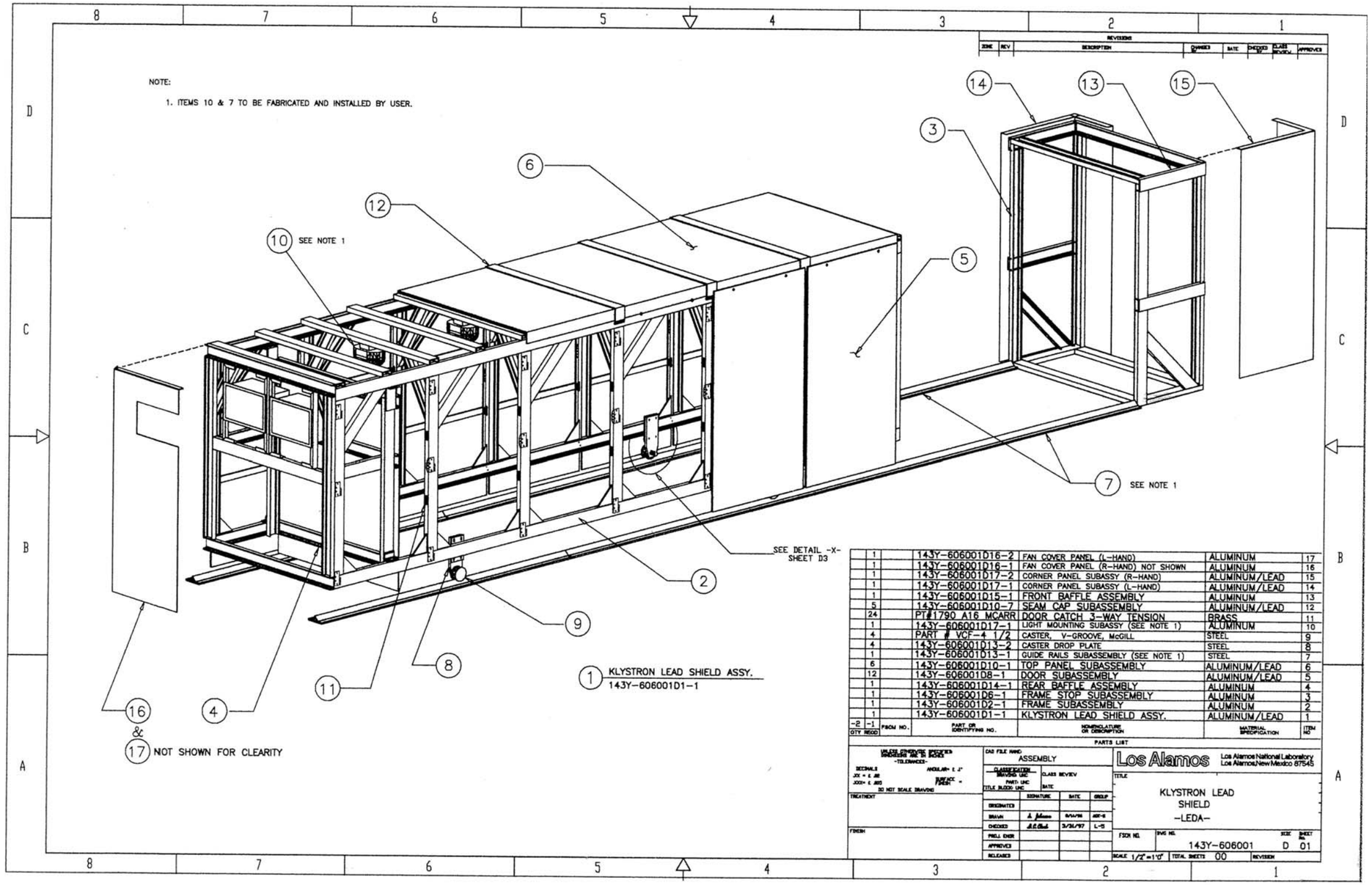

QTY REQD -2	QTY REQD -1	FSCM NO.	PART OR IDENTIFYING NO.	NOMENCLATURE OR DESCRIPTION	MATERIAL SPECIFICATION	ITEM NO
	1		143Y-606001D16-2	FAN COVER PANEL (L-HAND)	ALUMINUM	17
	1		143Y-606001D16-1	FAN COVER PANEL (R-HAND) NOT SHOWN	ALUMINUM	16
	1		143Y-606001D17-2	CORNER PANEL SUBASSY (R-HAND)	ALUMINUM/LEAD	15
	1		143Y-606001D17-1	CORNER PANEL SUBASSY (L-HAND)	ALUMINUM/LEAD	14
	1		143Y-606001D15-1	FRONT BAFFLE ASSEMBLY	ALUMINUM	13
	5		143Y-606001D10-7	SEAM CAP SUBASSEMBLY	ALUMINUM/LEAD	12
	24		PT#1790 A16 MCARR	DOOR CATCH 3-WAY TENSION	BRASS	11
	1		143Y-606001D17-1	LIGHT MOUNTING SUBASSY (SEE NOTE 1)	ALUMINUM	10
	4		PART # VCF-4 1/2	CASTER, V-GROOVE, McGILL	STEEL	9
	4		143Y-606001D13-2	CASTER DROP PLATE	STEEL	8
	1		143Y-606001D13-1	GUIDE RAILS SUBASSEMBLY (SEE NOTE 1)	STEEL	7
	6		143Y-606001D10-1	TOP PANEL SUBASSEMBLY	ALUMINUM/LEAD	6
	12		143Y-606001D8-1	DOOR SUBASSEMBLY	ALUMINUM/LEAD	5
	1		143Y-606001D14-1	REAR BAFFLE ASSEMBLY	ALUMINUM	4
	1		143Y-606001D6-1	FRAME STOP SUBASSEMBLY	ALUMINUM	3
	1		143Y-606001D2-1	FRAME SUBASSEMBLY	ALUMINUM	2
	1		143Y-606001D1-1	KLYSTRON LEAD SHIELD ASSY.	ALUMINUM/LEAD	1

Figure 3.14.1.c ERL General Shield Layout

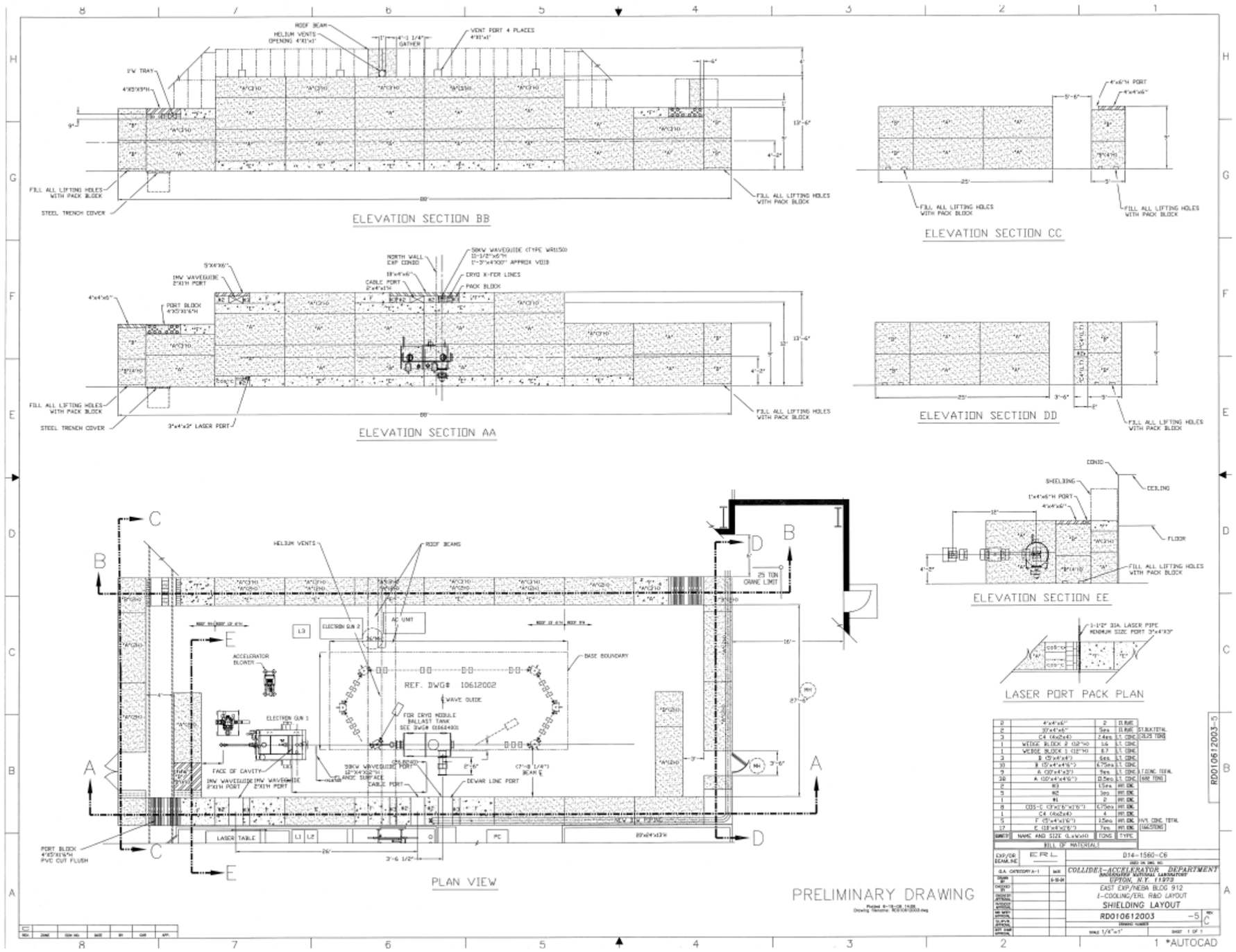

4. Safety Analysis

The level of detail included was correlated with the size, complexity, hazards, potential impacts and risks associated with ERL facility operation. The hazards analysis is comprehensive, and explored the full range of consequences each hazard could have on workers, the public, and the environment. It was based on sound assumptions so that effort would be focused on analysis of credible and realistic consequences. As allowed by DOE G 420.2-1[15], this SAD references a survey of the hazards present at the accelerator facility, including prompt radiation, radioactive materials, non-ionizing radiation, hazardous materials, and sources of energy. The hazard evaluation information in the SAD includes credible initiating events, the assumptions used in estimating the consequences, and controls required to reduce hazards and associated risk to acceptable levels. Identified controls were evaluated to determine if any were credited controls.

A credited control is one determined through hazard evaluation to be essential for safe operation directly related to the protection of personnel or the environment. The credited controls are a limited subset of the total controls employed for overall facility operation. Credited controls were assigned a higher degree of operational assurance than other controls. For example if a system, equipment or practice actively or passively protects workers and/or staff from a significant hazard, then it has formal administrative controls or limits for operation. These credited controls are treated specially and considered for incorporation in the Accelerator Safety Envelope (ASE), appropriate procedures and/or quality assurance.

[15] Accelerator Facility Safety Implementation Guide for DOE O 420.2B, Safety Of Accelerator Facilities

Implicit in the above discussion is that analysis of hazards, consequences, and the types and reliability of controls, involved professional judgment. This judgment was based on sound technical and/or scientific principles using accepted methods for hazard analysis suitable for the types and magnitudes of hazards present.

4.1. Identification of Potentially Hazardous Conditions from Radiation Associated With Operation

At ERL, the primary electron beam is only present when the machine is operating. Before interacting at a particular location, the accelerated beam is essentially mono-energetic, consisting of only electrons. If the electrons stop in the accelerator equipment, beam stop or shielding, then electromagnetic cascades and bremsstrahlung radiation can occur. For lower energy electrons, 25 MeV or less, bremsstrahlung radiation contributes substantially to the energy loss by electrons in matter. Bremsstrahlung radiation is emitted by a decelerating charged particle or by a charged particle changing direction. Bremsstrahlung is German for braking radiation, and in particular, the term is used for photon radiation emitted by electron decelerations when electrons pass through the electric field of atomic nuclei. This produces photon radiation distributed over a wide range of energies.

If electrons are accelerated in a magnetic field, they can also produce photons and this is termed synchrotron radiation. Synchrotron radiation from this accelerator is produced when the electron beam circulates in the magnetic field of the ring. This synchrotron radiation is low energy and is attenuated by the shielding used for bremsstrahlung.

DRAFT

When the machine is operating, the radiation outside the shielding is dominated by indirectly ionizing radiation such as photons and neutrons that penetrate the shielding. Neutrons are produced from the higher-energy bremsstrahlung photons that interact with nuclei that make up the concrete shield. Because these are lower-energy bremsstrahlung photons, at least in terms of causing nuclear reactions, the dominant neutron-producing mechanism is the giant nuclear resonance. Among the best-known example is the giant electric dipole (E1) resonance, which is concentrated in the energy region of 10 to 30 MeV for most, if not all, nuclei. In the E1 resonance, all protons and all neutrons in the nucleus oscillate with opposite phase, which produces a time-varying electric dipole moment, which acts as an effective antenna for absorbing or radiating gamma rays. The E1 resonance is the best known of the nuclear giant resonances. It is the dominant feature in reactions initiated by gamma rays. The absorption of a gamma ray induces the giant E1 oscillation, which breaks up, in this case, by emitting neutrons. This resonance is also the dominant feature in the reverse process, in which gamma rays are produced by proton and neutron bombardments of nuclei.[16]

The neutron spectrum from the E1 resonance process is often compared to a fission spectrum and is well described by a Maxwellian distribution. Shielding is relatively straightforward. The neutron-dose-equivalent tenth-value-layer for ordinary and heavy concrete is about 100 g cm^{-2} for this neutron spectrum.[17]

[16] http://www.answers.com/topic/giant-nuclear-resonance?cat=technology, January 2008.
[17] NCRP 144, Radiation Protection for Particle Accelerator Facilities, December 2003.

DRAFT

Neutrons can induce radioactivity in the ERL machine components, cooling water and nearby equipment. This neutron activation is expected to be insignificant at ERL because of the electron energies into the beam dump are well below most activation thresholds. Residual radiation from the dump will be verified by radiation surveys near the beam dump after the machine is turned off, and by cooling water sampling and analysis. Radiation controls are in place as required during entry into the ERL following machine shutdown for inspection, maintenance, modification or repair activities. Because of the insignificant activation at ERL no contamination issues are expected.

The principal radiation hazards at ERL derive from the primary electron beam flux and duty-cycle of the machine. Listed in order of relative importance to health, these hazards include:

- Potential inadvertent exposure of workers to primary electron beam or RF induced x-rays from the electron gun or 5-cell accelerating cavities

  NOTE: The access controls system and the enclosed beam pipe prevents exposure of personnel to this beam. The probability of unsafe failure of the access controls system that would allow an overexposure from primary beam or Bremsstrahlung is so low[18] that this hazard is not credible and further analysis is not performed.

- Exposure to photon and neutron radiation near labyrinths and penetrations
- Exposure to photon and neutron radiation that penetrates through the shielding
- Exposure to skyshine radiation

[18] D. Beavis, Failures in the PLC Based Radiation Safety Systems, October 31, 2000; D. Beavis, Frequency of Interlock Testing, November 6, 2000; D. Beavis, Estimation of Time to Loss of Protection-The D-Downstream Gate, November 13, 2000.

DRAFT

NOTE: Escaping neutrons and gammas through thin parts of the shield or roof causes skyshine radiation; that is, the escaping radiation interacts with atoms in the air column above the accelerator and some of the resulting lower-energy radiation is scattered downward from these interactions. Skyshine radiation may extend many tens of meters from this accelerator. The ERL roof shields are inaccessible, via administrative access controls, during operations. The concern here are the dose rates from skyshine in the ERL Control Room, B966 and B940 due to the expected occupancy of these areas relative to other areas surrounding ERL. However, this source is expected to be insignificant during routine beam operations. This will be confirmed during routine radiation surveys and by environmental TLDs placed around the facility.

- Exposure to activated air
- Exposure to potential residual radiation induced in machine components
- Exposure to or inadvertent release of activated cooling water to the environment

The ERL is an experimental machine that may undergo changes in operations as more is learned about its operating characteristics. If any of these changes involve a potential change in the radiation hazards, appropriate work planning and safety-committee reviews will take place to ensure that the BNL Radiological Control Manual requirements are met and ASE limits continue to be satisfied. If the ASE limits need to be revised to allow more flexibility in research/operations, the proposed ASE changes will be submitted to DOE for approval before the changes occur.

DRAFT

Estimates of the expected dose rates from ERL operations are described below. During commissioning, radiation surveys will be conducted to validate these estimates. The expectation is that actual dose rates will be below these computed does rates. If necessary, the shielding will be appropriately modified to ensure that routine and faulted doses and dose rates will be acceptable for full power operation of ERL.

Table 4.1 Parameters of the Prototype ERL in Building 912

	High charge mode	Low charge mode
Injection energy, MeV	3.5	3.5
Maximum beam energy, MeV	25	25
Average beam current, mA	100-200	10-200
Bunch rep-rate, MHz	9.4	9.4-700
Charge per bunch, nC	10 or more	~0.3 -1
Efficiency of current recovery	>99.95%	>99.95%

The proposed ASE limitations for the ERL are summarized below. It is noted that rated power sources for ERL, 1 MW for the gun and 50 kW for the 5-cell cavity, were increased 20% to estimate dose and dose rates. ERL power sources are not designed to produce this increased power; rather, the shielding was analyzed at this increased power level. Thus, a safety margin of 1.2 has been included in the dose and dose rate calculations in this SAD:

- Electron energy limit of 3.5 MeV for the super-conducting RF gun
- The power source of the superconducting gun is limited to delivering 1.2 MW of power to the gun
- Electron energy limit of 25 MeV for the ERL ring

DRAFT

- Electron beam power shall not exceed the equivalent of 10 MW of instantaneous power for the electron beam in the ERL ring
- The power source for the five-cell cavity will be limited to delivering a maximum of 60 kW of power to the cavity
- A beam power of 1.2 MW for electron beam striking the beam dump

4.1.1. Unshielded Source Radiation Levels

Based on average continuous beam current of 200 mA, the average beam power is 0.7 MW at 3.5 MeV and 5 MW at 25 MeV. For the purpose of setting limits in the Accelerator Safety Envelope, 1.2 MW at 3.5 MeV and 10 MW at 25 MeV were chosen as the maximum beam powers.

Continuous beam loss in the electron ring is limited via the physics of the ERL. If beam in the ring is totally intercepted, continuous beam loss in the ring vanishes since no energy is recovered to accelerate the next pulse in the CW train of pulses coming from the electron gun. This self-limiting effect is one of the peculiarities of an ERL ring. The maximum continuous beam loss is limited by the power that can be restored by the 5-cell cavity power supply, which is 50 kW. As noted previously, for dose and dose rates calculations, a factor of 1.2 or 60 kW is assumed to be the restoring power.

On the way to the dump, it is not expected that the entire 3.5 MeV beam at average current can be lost at any single point for an extended period of time. In radiation protection it is

DRAFT

a conservative practice to assume that all electron beams produce thick-target bremsstrahlung in high-Z material, regardless of the actual thickness or type of target. Thick target curves (see figure that follows)[19] for bremsstrahlung radiation from NCRP 144 Figure 3.5 show that a 3.5 MeV beam at 1.2 MW can produce instantaneous absorbed dose rates of $5x10^7$ rad/h at 1 meter in the forward direction and $8x10^6$ rad/h at 1 meter in the transverse direction. The 3.5 MeV beam has insufficient energy to cause a neutron dose contribution via the photon-giant-nuclear-resonance process. [20]

Routine loss of a small fraction of the 3.5 MeV beam is expected. In normal operations the losses of the 3.5 MeV beam will be dominated by loss at the collimator. One micro-amp of beam is anticipated to be routinely lost on the collimator. One micro-amp continuous 3.5 MeV beam loss, which is a beam power of 0.0035 kW, equates to a forward absorbed dose rate of 140 rad/h and a transverse absorbed dose rate of 28 rad/h at 1 meter with no shielding. The collimator is located in the transport between the gun and the first chicane.

The 3.5 MeV beam is not intended to be transported into the 25 MeV transport ring after the first bend after the superconducting RF cavity. For radiation safety purposes, interlocks prevent the transport of the 3.5 MeV beam past this magnet.

The electron gun beam power will eventually be transported to the beam dump. From Table 4.1, the average beam current is 200 milliamps. Two-hundred milliamps of continuous 3.5 MeV beam loss on the dump, which is a beam power of 700 kW, equates to a forward absorbed

[19] NCRP Report No. 144, Radiation Protection for Particle Accelerator Facilities, Figure 3.5
[20] Ibid, Figure 3.12

DRAFT

dose rate of 2.8×10^7 rad/h and a transverse absorbed dose rate of 5.6×10^6 rad/h at 1 meter with no shielding.

The high energy electron beam, 25 MeV, is separated from the low energy 3.5 MeV beam in the chicanes before and after the SRF cavity. Conservatively assuming a 60 kW maximum sustainable loss, which is the limit of the SRF power supply, NCRP 144 Figure 3.5 shows bremsstrahlung dose rates of 4×10^7 rad/h in the forward direction at 1 meter with no shielding, and 5×10^5 rad/h in the transverse direction. Since this energy bremsstrahlung also produces giant resonance neutrons, the 25 MeV beam generates the highest neutron yield.

Swanson[21] (see figure that follows) has illustrated the broad features of the radiation field due to the unshielded initial interactions of electrons. The figure shows the radiation dose is heavily dominated by the bremsstrahlung contribution. However, this figure is useful for making crude estimates of the resultant neutron radiation field. For a 60 kW continuous loss of 25 MeV electron beam, neutron dose equivalents range between 6×10^3 and 1×10^5 rem/h at 1 meter, which are several orders of magnitude less than the dose equivalent from bremsstrahlung. At C-AD, a value of 430 rem/kW-h at 1 meter was used in the Radiation Safety Committee Chair's analysis for electron energy of 25 MeV (i.e., 3×10^4 rem/h at 60 kW).[22]

DRAFT

[21] W. P. Swanson, Radiological Safety Aspects Of The Operation Of Electron Linear Accelerators, Technical Report No. 188, International Atomic Energy Agency (IAEA), Vienna, 1979. Adapted in Radiation Physics For Personnel And Environmental Protection, Fermilab Report Tm-1834, Revision 7, April 2004, J. Donald Cossairt, Fermi National Accelerator Laboratory.
[22] D. Beavis, Simple Estimate of ERL Radiation, August 1, 2006.

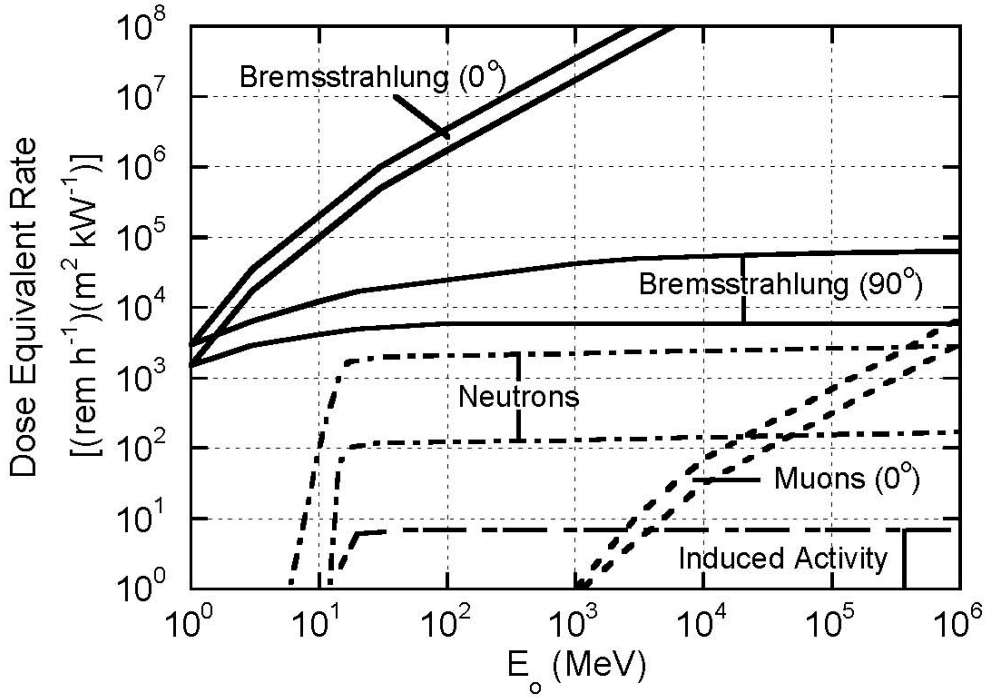

Fig. 3.10 Dose-equivalent rates per unit primary beam power at one meter produced by various types of "secondary" radiations from a high-Z target as a function of primary beam energy, if no shielding were present (qualitative). The width of the bands suggests the degree of variation found, depending on such factors as target material and thickness. The angles at which the various processes are most important are indicated. [Adapted from (Sw79a).]

The unshielded dose rate values represent a starting point for appropriately shielding the facility in order to adhere to the C-AD Shielding Policy. Section 4.1.2, which is the next section, contains detailed results of calculations that were performed for the shielded facility.

4.1.2. Maximum Credible Dose Rates on Outside Surface of 48-Inch Concrete Shield

Beam loss in the ring is limited for machine protection by beam current transformers used in a differential mode, and is anticipated being low because high loss would cause major equipment damage, quickly terminating operation of the accelerator. On the other hand, for this analysis the machine protection system is not credited in reducing dose from a beam loss event.

The maximum sustained beam loss is 1.2 MW for 3.5 MeV injection electrons and 60 kW in the 25 MeV ring. Credible routine losses are expected to be 1 W at beam injection and 50 W for the 25 MeV beam. Additional heavy concrete or iron shielding for the electron ring in the cave is present to reduce the bremsstrahlung dose rate in the forward direction. This added shielding reduces the 0-degree bremsstrahlung dose rates by a factor of at least 0.005. Including this added shielding, the following estimates for gamma and neutron dose rates at the outside surface of the ERL cave shielding are shown in Table 4.1.2.a.[23,24] Details of the calculations are given in Appendix 1.

DRAFT

[23] D. Beavis, Simple Estimate of ERL Radiation, August 1, 2006
[24] D. Beavis, The Effectiveness of a Two-Foot Thick Inner Heavy Concrete Wall, December 11, 2006

Table 4.1.2.a Dose Rates and Dose Outside of ERL Cave for 3.5 and 25 MeV Electrons

Condition	Instantaneous dose rate from maximum beam loss[a]	Dose rate from sustainable loss[b]	Dose from sustainable loss assuming interlock occurs[d]
3.5MeV@ 0 degrees, γ	88,000 mrad/h	0.073 mrad/h	0.0002 mrad
3.5MeV@ 90 degrees, γ	18,000 mrad/h	0.015 mrad/h	0.00004 mrad
25 MeV@ 0 degrees, γ	65,000 mrad/h[c]	4000 mrad/h[c]	10 mrad[c]
25 MeV @ 90 degrees, γ	13,000 mrad/h	800 mrad/h	2.0 mrad
25 MeV neutrons	120 mrem/h	6.0 mrem/h	0.015 mrem

[a] The maximum instantaneous beam loss is 1.2 MW at 3.5 MeV and 10 MW at 25 MeV, a loss which would terminate after a small fraction of a second.
[b] The sustainable loss is 1 W for 3.5 MeV and 60 kW for 25 MeV electrons is assumed.
[c] The forward direction gamma dose rates have been reduced by a factor of 0.005 by the addition of 2-feet of heavy concrete in the electron ring.
[d] As with all C-AD interlocking area-dose-rate monitors (named 'Chipmunks'), a 9-second delay from sensing the trip point dose rate to stopping of beam is conservatively assumed in SAD analyses.

Routine surveys during commissioning will ensure that radiation area postings reflect the actual dose rates during operations.

DRAFT

The electron gun and the 5-cell accelerating cavity will generate x-rays from field emission of wall-surface electrons. They are assumed to generate x-ray dose rates similar to the RHIC RF cavities. A conservative dose rate of 2000 rad/h at 1 meter is assumed for the maximum sustainable loss during conditioning of the cavity and 80 rad/h at 1 meter is assumed for routine losses. Comparison of this source with the dose rates from the routine electron beam loss shows that the x-ray dose rates at the outside surface of the ERL cave shielding are insignificant.

MCNPX was run to estimate the dose rates from skyshine in normally occupied areas during ERL operations. The results are summarized below for the assumed maximum sustainable loss of 60 kW, and for a more realistic but conservative loss of 50 W assuming that Chipmunks interlock the beam at a set point determined by the RSC. It is noted that ERL will be run only about 25% of a year. Using this occupancy with the expected sustainable loss of 50 W, the annual dose to an individual in the ERL control room will be 41 mrem.

Table 4.1.2.b Skyshine Dose Rate Estimates From 25 MeV Beam Loss[25]

Occupied Location	Maximum sustainable loss (60 kW of 25 MeV electron beam)	Conservative sustainable loss (50 W of 25 MeV electron beam)	Maximum dose with 60 kW loss assuming Chipmunk Trips Beam
ERL Control Room	98 mrem/h	0.082 mrem/h	0.25 mrem
Building 966	26 mrem/h	0.022 mrem/h	0.07 mrem
Building 940	4.0 mrem/h	0.0033 mrem/h	0.01 mrem

[25] Email from K. Yip to R. Karol dated January 29, 2008, Skyshine

DRAFT

The Klystron room shielding was based on the operation of a similar Klystron at Los Alamos, which had a 1/8 inch lead "garage" over it. The ERL Klystron operates at an upper voltage of ~92 kV. For the ~200 kV upper energy limit of the x-rays, the 1/8 inch of lead was computed[26] to be equivalent to 1-inch of steel at operating voltage and ~2.1 inches of steel at 150 kV. Based on this calculation and radiation measurements made at the manufacturer's facility, the Klystron room is a steel box with a wall thickness of 2 inches of steel. There are penetrations in the back wall for utilities and the wave guide. These penetrations are shadowed by steel and lead to prevent x-rays from directly shining out.

Dose estimates for the penetrations use a combination of simple source terms and estimates of the attenuation of the radiation as it propagates through the opening.[27] The estimates are intended to be order of magnitude estimates. Conservative assumptions are usually used so that the estimates represent upper limits for the potential dose rates. The low-intensity fault studies for the RF-gun, five-cell cavity, and transport of the low energy and high energy electron beams will be used to verify the source terms and radiation transport through the shielding and penetrations.

There are approximately 20 penetrations through the ERL external shielding. Two of the major penetrations are used for personnel and equipment access. Several of the penetrations are buss blocks containing several dozen small penetrations for access of utilities. Other penetrations are intended for electrical cables, cryogens, gas exhaust, laser beam, etc.

[26] MicroShield Version 7.02, Grove Software Incorporated
[27] D. Beavis, Dose Rate Estimates for ERL Penetrations, March 26, 2008.

DRAFT

The ERL enclosure has side walls composed of between four and eight feet of light concrete. The thin sections of wall are shadowed from the potential sources with inner shield walls located appropriately. The entire facility has a single layer of light concrete roof beams four feet thick, except for a transition region where the roof is two layers of roof beams. This transition region is where the 13 foot ceiling height in the center is reduced to 9 feet at both ends.

The radiation sources are predominately x-rays and gamma rays. The 25 MeV electron beam is capable of generating neutrons. Only in conditions where substantial high-Z shielding materials have been used or where it takes many bounces for radiation to get through a penetration is it possible for the neutron dose rates to dominate the x-ray dose rates.

The shielding was evaluated for two types of exposures, normal and fault conditions. Dose rates during fault conditions are typically many orders of magnitude larger than that of normal operating conditions. The areas around the penetrations are typically not occupied and they are posted for localized elevated dose rates. The main focus of the penetration analysis is the issue of dose to personnel during a faulted beam condition, as opposed to dose from normal operations.

During operations, all areas near the ERL shielding are posted at least as a Radiation Area. Large dose rates caused by fault conditions are detected and controlled by area radiation monitors (Chipmunks) distributed around the area as defined by the Radiation Safety Committee. These devices are coupled with the interlock system and terminate the radiation in 1 to 9 seconds

DRAFT

depending on the level of radiation at the detector. A delay of 9 seconds was assumed for the estimate of dose from fault conditions.

The four sources of radiation in the area are the injector, beam losses of the 3.5 MeV electron beam, the five-cell cavity, and beam losses of the 25 MeV electron beam. The source terms used are conservative. As already noted, the fault studies at low intensity will provide a check on the source terms and the effectiveness of the installed shielding.

The injector and the five-cell cavity can generate copious x-rays. No modeling has been conducted for the injector and the five-cell cavity in terms of the x-ray generation, but experience from other similar systems at C-AD can be used for guidance. The conditioning of these RF cavities will cause the largest x-ray generation. The superconducting five-cell cavity is expected to be able to absorb 100 to 1000 watts from field emission electrons crashing into the walls of the cavity before boiling too much helium and becoming normal. The voltage difference that field emission electrons cross is typically less than the gradient of a single cavity, 5 MV. Only a few electrons accelerate across several cavities. It is assumed that all the electrons are at 3.5 MeV with a maximum conditioning loss of 250 W. It is expected that the routine loss is less than 10 W for the five cell cavities. It was assumed that the injector has this same characteristic. Previous methods[28] are used to estimate the 90-degree radiation, using thick target formulas. The calculated unshielded dose rates for conditioning are 2000 rem/h at 1 meter, and for normal operations, 80 rem/h at 1 meter. Thus, the shielding used to protect against normal electron beam losses is adequate to protect against this source too.

[28] D. Beavis, "Simple Estimates of ERL Radiation", August 9, 2008.

DRAFT

The dose from a 25 MeV electron beam loss in the near zero degree direction has been estimated to be 10,800 rad/hr at 3 meters with 2 feet of heavy concrete between the source and the point of interest with a 60 kW loss[29]. This value was used in the calculations for locations where an inner shield wall acts as a shadow for the 25 MeV beam losses in the ring.

The maximum sustainable beam loss that the 5 cell cavity can support is 60 kW, which is limited by the RF power supply. According to the machine designers, the realistic maximum local loss that can occur is between 10 and 100 W before the machine is damaged and shuts down. The ERL has machine protection devices to limit losses in order to avoid equipment damage. Thus, the 60 kW loss assumed for shielding calculations (Appendix 1) is considered conservative. Routine losses are expected to be less than 10 W.

The 3.5 MeV beam has a power limit of 1.2 MW. This power can be deposited in the water cooled beam dump, which has local shielding. Again it is not expected that the machine can survive a large beam loss at any location, except at the beam dump. The beam dump is shielded sufficiently and was not considered for the penetration evaluations.

An arbitrary 1 kW of a 3.5 MeV electron beam was assumed for the penetration analysis. A routine loss of 10 W or less is expected. Any routine loss higher than this, as observed during daily radiation surveys, will be reviewed by the Radiation Safety Committee for the possible addition of local shielding.

[29] D. Beavis, "The Effectiveness of a Two-Foot Thick Inner Concrete Wall", December 11, 2006, Figure 1.

DRAFT

The following table (Table 4.1.2.c) summarizes the calculations in Appendix 1 for each penetration for gamma rays and neutrons. The maximum neutrons can come from a different source location than the gamma rays. In all cases the maximum gamma dose rates are from the 25 MeV electron beam losses.

Table 4.1.2.c Estimated Maximum Dose Rates and Fault Dose to Worker Near Penetrations

Penetration	Maximum Gamma Dose Rate (rem/h)	Maximum Neutron Dose Rate (rem/h)	Maximum Dose with Interlock (mrem)[8]
Laser port	2.5	0.024	6.3
1 MW Waveguide	50	0.48	130
Cryo Ports (5)	10 [1]	2.4 [1]	31
North Gate	0.31	2.2	6.3
North Labyrinth Buss Block	4.8 [2]	0.12	12
South Gate	59 [3]	0.19	150
Port in South Labyrinth (2)	72 [4]	0.72	180
West Trench	7.2	0.12	18
East Trench	2.4	1.9	11
South labyrinth buss block	0.12	0.36	1.2
ODH Vent	12 [5]	4.8 [5]	4.2
Lifting Fixture holes (4)	1.7 [6]	0.010 [6]	4.3
50 kW waveguide	34 [7]	1.2 [7]	88

[1] Assumes that steel has been used to reduce the gamma rays by a factor of 10.
[2] This is directly outside the buss block. This may be in a fenced area.
[3] A shield block in the ring center would substantially reduce this dose rate, if desired.
[4] At port exit which may be in a fenced area. Port may be packed in the future. This value is for the port with the highest dose rate of the two ports.
[5] This is on the roof and is not allowed to have personnel access during operations.
[6] Evaluated at the edge of the shielding and not on the roof.
[7] The penetrations for the cables ports, water pipes and the 50 kW waveguide are computed in a separate note[30]. The dose rates presented here are at a height of 12 feet above the floor.
[8] Barriers are used to prevent access to penetrations greater than 20 mrem fault dose. Shielding will be added and barriers removed based on fault studies in order to reduce the fault dose below 20 mrem.

[30] D. Beavis, "Estimate of the Radiation Exiting Penetrations for the ERL 50 kW Waveguide, Cable Buss Block, and Water Pipes", Dec. 6, 2006.

DRAFT

All the dose rates in the Table 4.1.1.c are sufficiently low such that with appropriately placed Chipmunk monitors to terminate the beam on large beam losses, the exposure to personnel is less than 10 mrem from a fault. Several of the larger dose rates can be further reduced and fault studies will allow evaluation of the need for added shielding by the RSC.

4.1.3. Maximum Credible Ozone Concentrations in the ERL Cave

Toxic gasses produced by ionizing radiation shows that ozone is among the most toxic and could be produced in quantities that cause the room to exceed the ACGIH Threshold Limit Value (TLV) level of 0.1 ppm. The TLV is the concentration that most workers could be safely exposed to 8 hours per day, 5 days a week. The highest radiation doses to air are where the highest local concentration will be located. There are no locations in the ERL beam line where electrons traverse air so only the radiation energy imparted by the Bremsstrahlung is considered in this analysis. The calculation model for ozone production in Swanson was used.[31]

The highest power level in the ERL is the energy deposited in the beam dump. This is 1.2 MW of 3.5 MeV electrons. For an uncollimated Bremsstrahlung beam from an optimum high-Z target, the production rate of ozone, P in liters per minute, is:

$$P = 1.7 \times 10^{-4}\ L\Omega$$

Where: L = meters of air

Ω = kW of electron beam power, 1200 kW for the beam dump

[31] W. P. Swanson, Toxic Gas Production at Electron Linear Accelerators, SLAC-PUB-2470, February 1980.

DRAFT

The beam dump is to be enclosed in a 1-foot lead shield with at most ~6" of air that the Bremsstrahlung beam passes through before encountering shielding. The actual air passage is much less. Using these conservative assumptions yields an ozone production rate of 0.03 L/m.

As indicated by Swanson, the mean life of ozone in air at room temperature, T, is 50 minutes for a radiation environment. Any natural ventilation of the cave is conservatively ignored. The calculated saturated concentration of ozone, C_{sat}, is:

$$C_{sat} = PT/V$$

The 6 inch air volume around the dump is 12,400 in^3 (200 L) since the dump is 60 inches long x 19 inches diameter. C_{sat} for that air-gap between the dump and lead shield is 7.5×10^3 ppm. Assuming exchange of the air in the gap occurs with cave air (V of 20,000 ft^3 or 570,000 L), then saturation concentration is reduced by a factor of 200/570000 or to a level of 3 ppm, well above the TLV limit.

Based upon this calculated result, the beam dump is to be enclosed in a tight structure maintained free of air by using an inert gas such as helium, or the air space between the dump and the lead shield will be ventilated outside the cave into B912 where the ozone will significantly dilute to safe levels. Ozone measurements will be made during ERL commissioning to determine the actual magnitude of the ozone problem and to optimize the solution.

DRAFT

The credible sustainable losses of the electron beam are 1 W for the 3.5 MeV electrons and 50 W for the 25 MeV electrons. The length of air until the uncollimated Bremsstrahlung beam reaches shielding is no greater than 4 meters. Assuming that the ozone produced by these losses are continuous and reach saturation in the ERL cave, the ozone concentration is 0.0003 ppm for the 3.5 MeV beam loss and 0.01 ppm for the 25 MeV beam loss. Thus there are no unsafe ozone hazards from routine electron beam losses.

4.2. Identification of Potentially Hazardous Conditions from Oxygen Deficiency

OSHA defines an oxygen deficient atmosphere in 29CFR1910.146 as atmospheres containing less than 19.5% oxygen by volume. Normal atmospheres contain ~21% oxygen. Clinically observed effects from oxygen deficient atmospheres do not begin until the concentration falls to ~17%. If a small number of workers are exposed to potential oxygen deficient atmospheres, it is cost effective to use conservative controls for protection. However, with large exposed populations it is necessary to better establish controls at an appropriate level. With too little control, the injury rate may be unacceptably high. With too much control, the ability to operate efficiently is diminished.

Controls address two types of exposures: one where a known oxygen deficiency exists, the other in which an oxygen deficiency does not exist but there is a potential for its occurrence. A known oxygen deficiency could exist, for example, in a confined space in which sample results show <19.5% oxygen. Work planning would determine the controls needed to safely work in this space. Controls would include periodic atmospheric monitoring, self-contained

DRAFT

breathing apparatus, ventilation and confined space permits. The premise for controlling a potential oxygen deficiency is that the risk to workers should be no greater than risks in a general industry setting.

If exposure to reduced oxygen is stopped early enough, effects are reversible. If not, permanent central nervous system damage or death can result. Major effects hindering escape from the vicinity of an oxygen deficiency are disorientation and unconsciousness. For personnel actively working, unconsciousness occurs at ~13% oxygen. A person in the general area of a catastrophic release of an inert gas and not hurt by a pressure wave would be alerted to the escaping gas by the noise and, if a cryogenic gas, the cold. That person could out-walk the expanding inert-gas cloud by holding their breath and safely walking out the nearest ERL cave exit.

The controls for potential oxygen deficiency are focused on the workers in the general area of the potential release, but not the immediate vicinity of the release point. The survival of individuals in the general area is highly probable because of the engineering and administrative controls, monitoring systems, and training.

For an unlikely scenario in which an individual is in the immediate vicinity of the equipment that failed at the time of failure, the affected individual would lose consciousness in seconds and probably not survive.

DRAFT

Training for workers includes the methods to become aware that a release of inert gas has occurred, escape methods and use of appropriate oxygen monitoring devices and escape packs. In addition to training on use of oxygen monitors and escape packs, ODH information is given in the facility specific courses required of all employees and users.

The C-AD Safety Analysis Document has a detailed description of the graded approach used to determine the controls necessary for areas having a potential for oxygen deficiency. It is recognized that these simplified methods cannot directly and quantitatively address the effects of the inert gas concentration gradients during transient release of the gas. The approach is to use a prescribed, simplified analysis to determine how an individual can have reasonable assurance that they are protected from a gas release. It treats the problem in a global way, by assuming uniform instantaneous mixing of the gas in all available volume within the enclosure. For nitrogen, helium and lighter gases, used at ERL this is not unreasonable. As already noted, individuals near the location of any release have higher likelihoods of injury or death. Thus a combination of the BNL SBMS ODH methods coupled with engineering judgment, assumptions on worker training, evacuation procedures and monitoring equipment are utilized in determining the controls needed to ensure an acceptably safe workplace.

The BNL SBMS models are used to determine the oxygen deficiency hazard (ODH) classification of a building. The SBMS is based on the Fermi ODH model. The Fermi Model is a prescribed method to determine the necessary level of hazard control for a building having the potential for oxygen deficiency. A graded approach is used to implement hazard controls as a function of the computed ODH fatality rate. The fatality rate is selected as the hazard index

DRAFT

since death is the most important, non-reversible effect of exposure to oxygen deficiency. The average US industrial fatality rate at the time the method was developed (1984), ~10^{-7}/hr, was defined to be the fatality rate at which protective measures, other than training and postings are required.[32] Today, that rate is about $2x10^{-8}$/hr.

Areas of ERL which have potential ODH hazards have been evaluated as described above. A low oxygen concentration set point/alarm is 18%. Alarm set points below 19.5% are acceptable because these alarms warn of accidents and not of planned, routine working conditions. The results of the ODH analyses for the affected areas of ERL are summarized in the Table 4.2.[33]

Table 4.2 Potential ODH Areas at ERL

Building	Free Volume	Bounding Cryogenic Leak Location	Spill Rate (SCFM)	ODH Exhaust Fan Capacity (SCFM)
ERL Cave in B912	20,000 ft^3	Failure of 1-inch copper LN2 transfer line	3275	12,000
ERL Helium Recovery Building	9500 ft^3	Rupture of Kinney vacuum pump helium discharge line	1150	2000

The ERL Cave volume assumed for ODH analyses conservatively excludes the labyrinth volumes and accounts for the equipment in the cave. The ERL helium recovery building volume

[32] T. Miller and P. Mazur, Oxygen Deficiency Hazards Associated with Liquefied Gas Systems: Derivation of a program of Controls, Am. Ind. Hyg. Assoc. J. 45(5):293-298(1984).
[33] BNL LESHC Meeting Minutes 06-06, May 18, 2006, Energy Recovery Linac in Building 912R. Karol, ERL ODH Calculations, January 8, 2008.

DRAFT

also accounts for the equipment in the room. The results of the ODH calculations show that both the cave and the helium recovery building are ODH 0 areas.

4.3. Identification of Potentially Hazardous Conditions from Electrical Energy

Chapter 3 describes the numerous electrical devices, magnets, power supplies, vacuum system, Klystron, RF systems, beam instrumentation and controls that are employed at ERL.

The sheer number of electrical devices and their conductors installed at accelerator and experimental facilities justifies recognizing electrical hazards as a major personnel hazard which requires detailed hazard controls. C-AD adheres to BNL SBMS subject area on Electrical Safety supplemented by the C-A-OPM 1.5 procedure series, order to mitigate electrical hazards. The hazards are described as follows:

AC Distribution

1. The primary AC distribution is at 13.8 kV. The feeds are underground to substations located at various sites. Transformers convert the 13.8 kV to 480 volts AC for subsequent distribution. Because of the very high hazard, the substations are fenced in with controlled access by the BNL Plant Engineering personnel. C-AD personnel do not normally have access to these areas.
2. Secondary distribution is 480 V, 3 phase, 60 Hertz, high resistance ground delta with remote sub-station ground-fault monitoring system. This is used directly in many pieces

DRAFT

of equipment, motors, pumps, power supplies, etc. It is further transformed to 220/120 V, 3 phase for lights, utility outlets and all general needs. The hazard at 480 V is not only from a 480 V shock, but also from the possible arc formation at a short circuit. The short circuit currents are extremely high and an arc can spray molten copper and other materials. The procedures followed on 480 V circuits include training, LOTO or key lockout, circuit voltage testing, and the use of proper personnel protective equipment, the use of which is based on arc flash calculation.

High Voltage, Direct Current

1. Low Current - In many pieces of electronic equipment there are high voltage, low current, power supplies. While the current in some cases may present a direct shock hazard, in others it will be too low to cause a direct injury, but may lead to indirect injuries, such as, falls, bumps or other physical or electrical mishaps. ERL components are prominently marked for a high voltage hazard and may also be interlocked if a direct shock hazard exists. ERL equipment uses high voltage power supplies and each set-up is reviewed by the ASSRC before being energized.
2. High Current - In the range of 10-50 mA passing through the body significant physical harm may occur. The RF systems, as well as various pulsed magnets, kickers, and other devices, use potentially lethal power supplies. All such power supplies are properly marked; interlocks actuated on entry to the supply are hard wired to the power source; panel indicator lights show the power supply status; local-remote lockout switches are

DRAFT

provided where more than one turn-on location is used. Shorting devices are provided, manual or automatic, especially on capacitor storage devices.

High Current, Low Voltage

Many devices use high currents, up to several thousand amperes, at relatively low voltages. In most cases the shock hazards are low but a short circuit on the lines, just as in the 480 V AC case, can lead to excessively high temperatures. Proper warnings, enclosing of conductors and interlock devices are used.

RF Voltages

RF voltages in the many kilovolt level are present in the accelerating system. Contact can result in shock and deep RF burns. The procedures as in the high voltage DC case are used.

4.4. Fire Hazards

The primary combustible loading at ERL consists of magnets, power and control cables, and beam diagnostic equipment. None of the materials is highly flammable, and with the possible exception of small amounts of control cable, all are expected to self-extinguish upon the de-energizing of electric power. Small amounts of flammable materials may be routinely used in support of ERL operations.

DRAFT

Due to a system for diversion of radioactive liquid effluent to a hold-up pond, there are no environmental impacts due to release of contaminated water from the fire protection water system. Water sprayed on potentially radioactive equipment may become slightly contaminated but would enter the sanitary system and be monitored before release. There are no significant amounts of combustible activated materials in the ERL and no significant radioactive particles would be present in smoke. Thus, there is no significant environmental hazard from a fire at the ERL.

To mitigate ERL fire hazards the systems are designed to industry codes and standards, there is fusing, limits exist on flammable gas volumes, there is fire detection, smoke detection alarms, sprinklers, control of combustible loading, ventilation systems, safety committee reviews, training for emergencies, control of ignition sources, and enhanced work planning.

4.5. Industrial Hazards

Standard industrial hazards such as lasers, vacuum and pressure, magnetic fields, cryogens, chemicals, and mechanical hazards are controlled by following the appropriate requirements in the BNL SBMS Subject Area.

4.6. Hazard Controls

The purpose of this section is to briefly summarize the various system features and administrative programs that help to control hazards or the minimize risk of various hazards. It is

DRAFT

noted that there are no credible offsite consequences from any ERL operations. Only workers or the environment are exposed to potential hazards.

4.6.1. Radiation Hazard Controls

The significant hazard at ERL is ionizing radiation, and operations are planned to be within DOE dose guidelines. The Department uses a graded system of controls such as shields, fences or barriers, locked gates, interlocks and procedures to match access restrictions with potential radiation hazards that satisfies both the BNL and DOE requirements.

Although the Laboratory site is a limited access site, service personnel from off-site or BNL non-radiation workers may work near ERL or may traverse the complex. The BNL policy is to administratively restrict the dose to 25 mrem per year to such personnel. The C-A Department adheres to this policy by using shielding, postings, radiation monitoring devices that prevent radiation levels from exceeding set points, radiation work permits, work planning and RS LOTO.

Shielding for ERL is also designed to permit access by appropriately trained personnel to areas adjacent to the accelerator cave even with credible inadvertent beam loss.

There are restrictions on access for specific ERL facility areas. Access into the machine area is prevented by dual interlocks when the machine is operational. This includes the operation

DRAFT

of the electron beams, the RF-Gun and five-cell cavity. Personnel access to the roof is administratively prohibited during operations. Personnel are not allowed in the 1 MW Klystron power supply room during operations. A substantial area between adjacent experimental building and the ERL shielding on the west side is fenced and locked with personnel excluded during operations or with limited access.

4.6.1.1. Permanent Shielding and ALARA Dose

Shielding is used to reduce radiation levels in occupied areas to acceptable levels. The C-A Department's shielding policy is given in Appendix 3, Shielding Policy. Potential access points to the ERL cave where personnel are prohibited during operations will be controlled by the Access Control System and the use of chicanes.

Shielding design analyses were performed for ERL, and ALARA was integrated into the overall facility design. Soon after beam is available, studies will be conducted at low power in order to verify the design and to optimize shielding, as needed, to help achieve an ALARA dose to personnel. Extensive radiation surveys of normal operations, as well as low-intensity simulated, credible beam faults, are conducted as required during commissioning, initial operations and for future, approved modifications. These surveys provide assurance and verification of the adequacy of the shielding and access controls. It is noted that the permanent shielding and access controls are configured to support the BNL Radiation Control Manual dose limit requirements, and are further enhanced to support the BNL Radiation Control Manual ALARA considerations.

DRAFT

The shield was planned with ALARA in mind such that, during normal operations, the dose rate on accessible outside surfaces of the shield is planned to be less than 0.25 mrem/h in areas under access control. Areas under access control are all designated Controlled Areas or radiological areas as defined in the BNL Radiation Control Manual. The design of 0.25 mrem/hr is a guideline based on the actual ALARA design objective of less than 500 mrem per year. That is, assuming 100% occupancy at the shield face, a 2000-hour per year residence time yields an acceptable ALARA design objective of 500 mrem. The 500 mrem per year ALARA design objective is one half the design objective stated in 10CFR835 § 835.1002 (b).

Since there are many ways to control access and residence time by area designation, training, signage and work planning and since there is a decrease of dose rate with distance from the shield face, significantly higher shield face dose rates are acceptable. Therefore, shields are evaluated in terms of the guideline of 0.25 mrem/h, and instances where higher values may be acceptable have barriers and postings to indicate where area designations play a major role in minimizing radiation exposures.

The permanent bulk shielding materials used at ERL are primarily materials used at all existing accelerator facilities. For example, concrete and iron provide protection for personnel outside the accelerator cave and Klystron room. In addition to the materials mentioned above, paraffin, borated paraffin, polyethylene, borated polyethylene and Pb may be used for local shielding and in special circumstances, along with appropriate fire safety and industrial hygiene controls. Shielding configuration is closely controlled and may not be changed without review and approval of the C-A Radiation Safety Committee (RSC).

DRAFT

4.6.1.2. Radiation Detection and Radiation Interlocks

At locations external and/or adjacent to the ERL cave where unlikely but possible beam loss may occur, the use of hard-wired, fail-safe interlocking radiation monitors are used. This technique is standard practice at DOE accelerator facilities to maintain radiological-area classification compliance by providing a robust and rapid beam inhibit if any monitor exceeds a preset interlock limit. These radiation monitors are part of the QA level A1 safety-significant access-control-system for personnel protection.

Interlocking radiation monitors at C-AD are calibrated annually. These radiation monitors have been dubbed Chipmunks. They are tissue-equivalent ionization chambers that measure dose equivalent rate, in mrem per hour, from pulsed, mixed-field neutron and gamma radiation. In the ionization chamber, total ionization from a single radiation interaction event is collected. From this ionization, the Chipmunk circuitry produces one pulse for every pico-Coulomb of charge. If the circuit is overdriven, then the circuit produces a continuous train of pulses. This feature prevents the Chipmunk from jamming at very high dose rates. The range if the Chipmunk is about 1 mrem/h to 100,000 mrem/h. Chipmunks that are used as area-radiation monitors for personnel protection are located in accessible areas of the ERL facility as determined by the C-A Radiation Safety Committee. Chipmunks interlock the electron beam should radiation levels exceed limits defined by the C-A Radiation Safety Committee. The operation of Chipmunks with interlocking capability is fail-safe. Loss of power results in beam off for interlocked Chipmunks, and/or an alarm in the ERL Control Room adjacent to Building 912, a control room that is continually manned during routine operations. Additionally, the

DRAFT

Chipmunk uses a built-in keep-alive radiation source to monitor for failures. Such a failure will trigger an alarm in the ERL Control Room and/or an interlock when appropriate.

The interlock system is hard-wired and uses relay logic or PLCs to activate or deactivate a device or a magnet power supply to prevent beam from entering the fault area when a fault condition is detected. These systems are monitored by an independent computer, and the fault condition is logged.

Fixed-location area-radiation monitors such as Chipmunks also provide real-time dose information in B912. This dose rate data is logged every few minutes and stored on computers. General locations are initially selected for the real-time monitors; exact locations are determined based on beam-loss tests conducted during the ERL commissioning phase and on subsequent radiation surveys during operation. Final area radiation monitoring instrument locations are approved by the C-A Radiation Safety Committee.

Additional area monitors may be used to assess the long-term integrated dose in areas accessible to the public and other individuals not wearing personnel dosimeters. Thermo-luminescent dosimeters (TLDs) identical to those worn by radiation workers are mounted in locations in accordance with the BNL Radiological Controls Division procedures for this purpose. The dose recorded by these TLDs is indicative of the exposure of a person spending full time at that location. Neutron dosimeters, if their use is indicated for this purpose, will be attached to phantoms to simulate use by personnel.

DRAFT

4.6.1.3. Control of Radioactive Materials and Sources

When the electron beam is turned off, the remaining radiation hazard comes from activated material and sources. Activation of materials is expected to be either non-existent or insignificant at ERL. Activated material may be a direct radiation hazard, and may have removable contamination. All known or potentially activated items will be treated as radioactive material and handled in accordance with BNL Radiation Control Manual requirements. Unlabeled radioactive material that is accessible to personnel is placed in appropriately posted radiological area. Suspect radioactive material is surveyed by a qualified RCT before release and then controlled in accordance with the survey results. Process knowledge may also be used to certify items being removed from radiological areas as being free of radioactivity. Known radioactive materials are appropriately labeled before removal from an area that is posted and controlled. Radioactive items with removable contamination on accessible surfaces are packaged before removal from posted radiological areas. Workers whose job assignment involves working with radioactive materials receive documented training as radiological workers. Radioactive sources below accountable-activity-limits are treated as radioactive material. Accountable sealed radioactive sources are controlled, labeled and handled in accordance with the BNL Radiation Control Manual and the C-A Operations Procedure Manual. Accountable sealed radioactive sources that are in regular use are inventoried and leak-tested every six months.

DRAFT

4.6.1.4. Portable Radiation Monitors

Portable radiation detection instruments are used by Radiological Control Technicians (RCTs) and, potentially, other trained and approved C-A personnel, to measure the radiation fields in occupied areas during commissioning and periodically during normal operations. These measurements will be used to establish and confirm area radiological postings. Instruments used for this purpose will be appropriate for the type and energy of the expected radiation, and will be calibrated in accordance with requirements.

Experience at the C-AD accelerators and experiments have shown that contamination is not a significant problem at our facilities. ERL contamination is not expected, however, routine contamination surveys are conducted to verify that contamination is not a problem. Instruments used to frisk personnel who are exiting posted areas that might contain removable contamination are used as appropriate.

4.6.1.5. Personnel Dosimetry

All radiation workers wear appropriate TLDs and self-reading dosimeters as required by the BNL Radiation Control Manual while working in areas posted for radiation hazards. Dosimeters are exchanged on a regular basis and processed by a DOELAP-accredited laboratory. Records of the doses recorded by these dosimeters are maintained, and these records are available to the monitored individuals.

DRAFT

4.6.1.6. Access Controls Systems

The radiation security system design for access controls at ERL is classified as QA level A1 according to the C-A QA plan, but the Department allows certain components to have a lower classification because failure is to a safe state or critical parts are redundant. The Access Controls Group installs industrial grade components only. This Group labels parts that pass incoming tests as A1 or A2 and places labeled parts in controlled storage areas. The Group maintains documentation for these acceptance tests.

The basic design principles of the access control system are:

- Either the beam is disabled or the related security area is secured
- Only wires, switches, relays, PLCs and active fail-safe devices, such as chipmunks, are used in the critical circuits of the system
- The de-energized state of the relay is the interlock status; that is, the system is fail-safe
- Areas where radiation levels can be greater than 50 rem/h require redundancy in disabling the beam and in securing the radiation area
- If a beam fails to be disabled as required by the state of its related security area, the system has backup or reach-back

Very High Radiation Areas are those areas that enclose primary beam. Very High Radiation Area hardware requirements comply with the BNL Radiation Control Manual. The C-A Radiation Safety Committee requires:

- Locked gates with two independent interlock systems

DRAFT

- Fail safe and redundant radiation monitors or other sensing devices
- Indicators of status at the facility in the ERL control room
- Warning of status change
- Emergency stop devices within potential Very High Radiation Areas

The C-A Radiation Safety Committee reviews interlock systems for compliance with requirements in the BNL Radiation Control Manual, Standards Based Management System requirements and C-A Operations Procedure Manual procedures. A Representative of the BNL Radiological Controls Division is a member of the C-A Radiation Safety Committee. The C-A Radiation Safety Committee defines the design objectives of the security system and approves the logic diagrams for relay-based circuits and state tables for PLC-based circuits. Cognizant engineers sign-off on wiring diagrams and the C-A Chief Electrical Engineer approves each diagram. The C-A Access Controls Group maintains design documentation.

The Access Controls Group conducts a complete functional check of all security system components at an interval required by the BNL Radiological Control Manual. In the checkout, the Access Controls Group checks the status of each door-switch on a gate, and each crash switch in the circuit. They check the interlocks and the off conditions for all security-related power-supplies to magnets and magnets that may act as beam switches. They check every component in a security circuit. As they test, they fill-out, initial and date the security system test-sheets obtained from the C-A Operations Procedure Manual. Test records are maintained as required by the C-A Operations Procedure Manual.

DRAFT

4.6.2. Control and Use of Hazardous Materials

The BNL Chemical Management System is designed to ensure that workers are informed about the chemical hazards in their workplace. The Chemical Management System is maintained to comply with OSHA and EPA regulations concerning hazardous chemical communications. This program includes provisions for policy, training, monitoring exposure limits, handling, storing, and labeling and equipment design, as they apply to hazardous materials. Inclusive in the hazardous material protection program will be: procurement, usage, storing, inventory, access to the hazardous materials, use of appropriate PPE, as well as housekeeping and chemical hygiene inspections of C-AD facilities. All BNL general employees receive appropriate general Hazard Communication training. Standards for general hazardous materials communication are specified by the BNL Standards Based Management System. Training to these standards is provided, and the training program records are maintained on the BNL BTMS. C-AD staff working in ERL areas with a potential for exposure to hazardous chemicals receive appropriate job-specific training at the time of initial assignment and whenever a new hazard is introduced into the work area. A comprehensive listing of all Materials Safety Data Sheets for the chemicals used at the BNL site is available on the BNL web or equivalent. The system of work controls, which is part of the BNL Integrated Safety Management System, requires enhanced work planning for work with certain hazardous materials. The enhanced work planning ensures that adequate hazard controls and completion of required training are in place before work with hazardous materials begins.

DRAFT

The use of flammable liquids is minimal. Any use of flammable liquids follows BNL SBMS requirements.

4.6.3. Electrical Safety

The requirements for electrical safety are given in detail in the BNL Standards Based Management System and the C-A Operations Procedures Manual. Electrical bus work is covered to reduce/prevent electrical hazards in the power supply areas. In the ERL cave, exposed conductors will not be present and magnet buss is covered. In Controlled Access mode, even though the magnets will not be powered, the power supplies will not be locked out. Workers are trained to assume that magnets are powered in all cases and to treat them accordingly. In cases where workers are required to work on or near a specific magnet during Controlled Access or Restricted Access, the magnet power supply will be locked out and tagged out by the worker.

In some cases, it will be necessary to work near magnetic elements while powered. Appropriate control over access during this mode is maintained by the ERL Operations Supervisor. Work planning, Working on or Near Energized Conductor Permits and training requirements for entrants under these circumstances address concerns for inadvertent contact with powered conductors and exposure to magnetic fields.

4.6.4. Lockout/Tagout Program

DRAFT

Lockout/tagout procedures are specified in the C-A Operations Procedure Manual. All workers will be required to train in lockout/tagout procedures at a level consistent with their position. Where electrical hazards could be present to C-A personnel working in an area, lockout/tagout procedures are implemented only by trained and authorized personnel.

Breaker/disconnect operations as part of the LOTO follows the electrical PPE requirements of the BNL SBMS subject area, Electrical Safety, which is equal to or more restrictive than NFPA 70E in order to prevent injury from arc flash accidents.

4.6.5. Safety Reviews and Committees

Standing safety committees are utilized throughout design, construction, commissioning and operation to focus expertise on safety, environmental protection, pollution prevention and to help maintain configuration control. See Chapter 3 for details of each committee's authority and responsibility.

4.6.6. Training

Worker training and qualification is an important part of the overall ESH plan for C-A Department. Training and qualification of workers is described in the Operations Procedures Manual and the required training for individuals is defined in the Brookhaven Training

DRAFT

Management System (BTMS). All staff personnel and experimenters require an appropriate level of training to ensure their familiarity with possible hazards and emergency conditions.

Workers are trained in radiation and conventional safety procedures at a level consistent with their positions. The number and type of training sessions/modules is assigned using a graded approach commensurate with the staff members' responsibilities, work areas, level of access, etc. An up-to-date record of worker training is kept in the BTMS database. Radiation worker access will only be allowed if adequate training is documented, except in cases of emergency. Training procedures and course documentation will be reviewed and updated periodically.

4.6.7. Personal Protective Equipment

Special clothing is used to protect workers who are exposed to the various electrical hazards and hazardous materials, including chemicals and radiation. The clothing for a particular application is selected considering the expected hazards; a variety of types of clothing is needed to meet all hazards. There are no predicted hazards that are unique to C-A facilities, experience and compliance with DOE 10CFR851 ensure the adequacy of protective clothing in a particular application.

Respiratory protection is provided for workers who might otherwise be exposed to unacceptable levels of airborne hazardous materials, including chemicals, oxygen deficient

DRAFT

atmospheres and radioactive materials. Respiratory protection is selected, used and maintained per OSHA 29CFR1910.134 and BNL Respiratory Protection Procedures.

4.6.8. Significant Environmental Aspects and Impacts

In support of Brookhaven National Laboratory's broad mission of providing excellent science and advanced technology in a safe, environmentally responsible manner, the Collider-Accelerator Department is committed to excellence in environmental responsibility and safety in all C-A Department activities, including ERL operations and maintenance.

To provide excellent science and advanced technology in a safe and environmentally responsible manner the Collider-Accelerator has, over the past 20 years, continuously reviewed the aspects of its operations in an effort to identify and accomplish waste minimization and pollution prevention opportunities. This process began in 1988 with the development of formal environmental design guides and a design review process. More recently, this effort has resulted in a further formalization of its processes under the guidelines of ISO 14001, the BNL ISO 14001 "Plus" Environmental Management System Manual, and SBMS subject areas governing ISO 14001 implementation. The BNL EMS program emphasizes compliance, pollution prevention and community outreach. Based on the aspect identification and analysis process in the Subject Area, Identification of Significant Environmental Aspects and Impacts, the following aspects are significant to the ERL activities:

- Regulated industrial waste

DRAFT

- Hazardous waste
- Radioactive waste
- Atmospheric discharge
- Liquid effluents (not expected to be radioactive)
- Storage/use of chemicals or radioactive material
- Soil activation (not expected to be significant)

The environmental policy as set forth by Brookhaven National Laboratory in the Environmental, Safety, Security and Health Policy is the foundation on which the C-A Department manages significant environmental aspects and impacts. The formal management program is called the C-A Environmental Management System. The Environmental Management System details may be found in the C-A Operations Procedure Manual:[34]

The process evaluations are documented in C-A OPM Chapter 14. Waste streams are reviewed by the C-AD Environmental Compliance Representative (ECR) and a process evaluation denoting all material inputs and outputs for the each process of ERL is on file for existing processes. A new process evaluation is performed for each new, significant process before use.

4.6.9. Hazard Reduction Associated With Waste Generation and Handling

[34] http://www.rhichome.bnl.gov/AGS/Accel/SND/OPM/Ch01/01-10-02.PDF Environmental Management Program Description Collider-Accelerator Department and Superconducting Magnet Division

DRAFT

Hazards associated with handling, packaging, treating and disposing of wastes generated during operation and modification of the facility are reduced when the generation of these wastes is minimized via pollution prevention (P2) techniques. The BNL approach to P2 associated with the operation and modification of accelerators and experiments is to address it during the design and construction phase. The objective is to minimize or eliminate the anticipated costs associated with hazardous and mixed waste generation as well as the treatment and disposal of wastes and the consumption of resources in all ERL life cycle phases: construction, operation, closure and decommissioning. Dollars spent during the design phases will provide for significantly reduced total costs over the life of the facility thus making more funds available for science. The following are the main objectives of the BNL P2 program:

- Minimize the amount of hazardous, radioactive and mixed wastes that are generated
- Minimize the cost of waste management
- Comply with federal, state and local laws, executive orders and DOE orders

The Collider-Accelerator Department has implemented a P2 program as part of its commitment to comply with the Environmental Management System and ISO 14001. C-AD facilities have been registered to the ISO standard by a third party registrar since CY 2000. Modifications to C-A operations have helped minimize hazards and costs associated with the generation of waste streams.

4.6.10. Fire Detection, Egress, Suppression and Response

DRAFT

The basis of design for fire detection, egress, suppression and response has been determined by coordination with the BNL Fire Protection Engineer (FPE) and an outside consulting group. FHAs are on the C-AD web. C-AD facilities comply with DOE fire protection guidelines as well as NFPA standards, or else have approved exemptions from the local AHJ (BNL Fire Safety Committee). The system is integrated with the site-wide system and is comprised of an automatic fire detection and suppression system that includes automatic fire suppression and rapid response capability coverage by the BNL Fire Department. Sprinklers are not provided at the Building 912 ceiling or roof levels, but rather at intermediate levels and at or within enclosures, as required. Because of the low flammability of the magnets, power and control cables and beam diagnostic equipment, they do not have automatic fire suppression systems, except for certain areas where significant risk of programmatic disruption exists. Manual and automatic fire detection and alarm initiation devices are installed throughout the facility. Where needed, smoke and/or heat detection devices are supplemented with pressure sensitive sensors, flammable gas detectors or other advanced detection devices such as high sensitivity smoke detection, HSSD. The appropriate portable fire extinguishers are provided for manual fire fighting efforts by trained staff. Fire alarms are alarmed at the BNL Fire Department, Building 599, and at BNL Police Headquarters, Building 50, thus providing continuous coverage for rapid fire response. This will put additional professional fire fighting resources into action within a short period. Roadways around the facility help protect it from surrounding wildfires. The building roofs are non-combustible metal and do not ignite from burning ash from brush fires.

DRAFT

The means of egress for occupancies is in accordance with NFPA 101. Enclosure exhaust fans are located within the ERL ring enclosure and may be used for rapid smoke removal.

4.6.11. Routine Credible Failures

Routine credible challenges to controls associated with worker and experimenter protection and with environmental protection are further detailed in Appendix 6, Qualitative Risk Assessments.

Beam losses at ERL are sufficiently attenuated by the bulk shielding for expected routine operation. Adequate shielding is provided to meet requirements established by the Laboratory for permissible exposure to radiation workers, non-radiation trained workers and members of the public during normal machine operations. Present ERL shielding designs reduce all normal radiation levels to well below the DOE ALARA guidelines.

Exposure to nearby facilities from ERL operations is less than 25 mrem per year and only a small fraction of the permitted 5 mrem per year at the site boundary, which are the Laboratory guidelines for radiation exposure for nearby facilities and the site boundary, respectively. Radiation exposure to maintenance workers is reduced through the design of equipment to simplify maintenance and the selection of materials to minimize failures. Through such reviews,

DRAFT

maintenance activities will be controlled to maintain radiation exposures well within the DOE annual limits, limits that are 5 to 20 times higher than the Department's ALARA guidelines.

There are no significant quantities of dispersible gaseous or liquid radioactive materials produced at ERL. Operations personnel are trained to confine, clean up and report all water spills to management. Experience indicates that periodic leaks may occur onto the concrete floor. Spilled water is sampled before release to the appropriate waste stream or is allowed to safely evaporate in place. No off-site threats to the public are present.

4.7. Evaluation of Potential Impacts to Workers, Public and Environment

The routine radiation dose to workers is well below the regulatory limits. Worker exposure to other industrial hazards such as oxygen deficiency hazard is controlled such that potential injury is improbable. Due to the short range of the radiations, the risks to the public are zero.

Worker radiation doses, even including the maximum credible beam fault dose on a frequent basis, would not cause deterministic effects such as burns or tissue damage unless an individual were in the beam enclosure during operations. The Access Control System, which is categorized as Safety-Significant, assures that such irradiations are not credible.

DRAFT

Cooling water spills are unlikely due to adherence to ASME codes and consensus design standards. Due to the lack of chemicals and dispersible radioactivity, operation of the ERL facility is anticipated to have virtually no impact on the environment.

4.8. Selection of Control Measures That Reduce Risks to Acceptable Levels

Credited controls have been selected to favor reliance on passive over active design features and to favor engineered controls over administrative controls. Mitigation of risks associated with the ERL facility is largely achieved with passive design features. The configuration of the ERL facility meets the C-AD mission of producing an intense source of pulsed electrons while satisfying safety requirements, foremost of which is the attenuation of prompt and secondary radiation. The passive shielding built into the Klystron, ring enclosure, and certain ERL structures (e.g., beam stop) was designed to passively reduce penetrating radiation to levels that are ALARA and to allow unencumbered access by users and staff in areas routinely occupied by personnel.

Active credited engineered controls are employed as needed to protect workers and users from radiation exposure, ODH and the equipment from extensive fire damage. For example, the personnel access control (ACS) provides beam trips in response to access violations into hazardous areas or detection of elevated radiation levels in certain potentially occupied areas. Another example of an active engineered control is the ring enclosure ventilation system that activates upon ODH alarms. An example of engineered equipment protection is the sprinkler

DRAFT

system. Proper function of active controls is ensured by required surveillance/maintenance requirements specified in the accelerator safety envelope (ASE).

Certain credited administrative controls have also been identified. To a large extent, required administrative controls are addressed by integrated safety management (ISM) programs already well established and maintained at BNL (e.g., radiation protection, electrical safety, etc.). Administrative controls specific to ERL are addressed by ASE requirements to ensure their safety function is maintained.

4.9. Listing Of All Credited Engineered and Administrative Controls

Table 4.9.a Summary of Credited Engineered Controls

	Credited Engineered Control	Applicable Events
1	Chipmunk-interlocked beam cutoff on abnormal radiation levels	Table A.6-4 Qualitative Risk Assessment – Radiation External to Enclosure
2	Access-controlled gates	Table A.6-4 Qualitative Risk Assessment – Radiation External to Enclosure
3	Ionizing radiation shielding	Table A.6-4 Qualitative Risk Assessment – Radiation External to Enclosure
4	Fire detection and suppression systems	Table A.6-11 Qualitative Risk Assessment – Fire
5	ODH monitoring system	Table A.6-13 Qualitative Risk Assessment – Oxygen Deficiency Hazards (ODH)
6	ASME rated pressure relief valves and burst disks, ASME compliant pressure vessels and piping or equivalent	Table A.6-7 Qualitative Risk Assessment – Conventional/Industrial Hazards
7	Remote sub-station ground-fault monitoring system	Table A.6-3 Qualitative Risk Assessment – Electric Shock/Arc Flash

DRAFT

Table 4.9.b Summary of Credited Administrative Controls

	Credited Administrative Control	Applicable Events
1	Review of radiation safety by C-A RSC	Table A.6-4 Qualitative Risk Assessment – Radiation External to Enclosure
2	Configuration controlled ACS drawings and computer codes; annual ACS testing	Table A.6-4 Qualitative Risk Assessment – Radiation External to Enclosure
3	Configuration controlled shield drawings and calculation codes	Table A.6-4 Qualitative Risk Assessment – Radiation External to Enclosure
4	Annual fire detection and suppression system tests	Table A.6-11 Qualitative Risk Assessment – Fire
5	ODH monitor calibrations	Table A.6-13 Qualitative Risk Assessment – Oxygen Deficiency Hazards (ODH)
6	Relief valve and burst disk maintenance according to ASME standards	Table A.6-7 Qualitative Risk Assessment – Conventional/Industrial Hazards
7	Ground-fault alarm testing	Table A.6-3 Qualitative Risk Assessment – Electric Shock/Arc Flash

4.10. Description of the Maximum Credible Incident

The maximum credible incident is the incident in terms of property loss or injury to personnel that would result assuming all installed safety systems functioned as designed.

4.10.1. Maximum Credible Fire Incident

The objectives of presenting no threats to the public health and welfare or undue hazards to life from fire are satisfied. The designs of all C-A facilities comply with the "Life Safety Code" (NFPA 101) and NYS Building Code and with the specific requirements of the

DRAFT

Occupational Safety and Health Standards (CFR29, Part 1910) applicable to exits and fire protection.

Welding gases and flammable/explosive gases are used and stored according to NFPA codes and standards applicable to experimental installations. Gases are stored in compressed gas cylinders that meet DOT specifications. Large quantities of gas are forbidden in accelerator areas. There are no off-site threats to the public should a cylinder fail.

The facility is designed with an "improved risk" level of fire protection. The design requirements that were used are found in: 1) DOE Order 420.1, Facility Safety and 2) DOE Order 6430.1A, General Design Criteria. ERL is fitted with fire detectors and fire protection systems where appropriate. Fires are expected to be extinguished by these protective systems. Combustible loading in the ERL beam cave and other power supply areas consists of magnets, power cables, control boards, control cables and beam diagnostic equipment. None of the materials are highly flammable, and with the possible exception of small amounts of control cable and circuit boards, all are expected to self extinguish upon de-energizing of electric power. Induced radioactivity is deeply entrapped in concrete shielding and is not dispersible in a fire. There are no off-site threats to the public from a fire.

The personnel risks associated with the fire hazard are acceptable considering the type of building construction, the available exits, the fire detection systems, the fire alarm systems and

DRAFT

the relative fire-safety of the components and wiring. Emergency power and lighting is available in accordance with fire industry standards.

Travel distances to exits at ERL do not present a problem. In structures of low or ordinary hazard and in structures used for general or special industrial occupancy, NFPA 101 permits travel distances up to 120 m to the nearest exit if the following provisions are provided in full:

- Application is limited to one-story buildings only
- Interior finish is limited to Class A or B materials per NFPA definitions
- Emergency lighting is provided
- Automatic sprinklers are provided in accordance with NFPA 101 or exempted by the local AHJ
- Extinguishing system is supervised

Smoke and heat venting by engineered means or by building configuration are provided to ensure that personnel are not overtaken by spread of fire or smoke within 1.8 m of floor level before they have time to reach exits.

DOE has established limits of $1,000,000 for a Maximum Possible Loss and $250,000 for a Maximum Credible Loss mandating the installation of automatic suppression systems in locations where those limits are exceeded. ERL design meets these criteria. It is noted that ERL

DRAFT

is an experimental facility with a limited life time that allows judgment by the AHJ in determining the fire protection requirements.

Based on previous experiences at C-AD, the predominant sources of fire initiation have come either from electrical malfunctions or overheating in beam-line components such as magnets, which have caused a break down of the electrical insulation and subsequent arcing. The maximum credible fire incident was determined by the AHJ to be a fire in one magnet and damage to the two adjacent magnets. While the klystron's 100 kV transformers have 800 gallons of oil, it was felt that smoke detectors, interlocks to turn off power to the 100 kV transformers, fire sprinklers, low flammability oil in the transformers, secondary containment and on-site fire responders would result in a less credible fire incident.

4.10.2. Maximum Credible Electrical Accident

The electrical systems and equipment in use at ERL is the same as that in use at C-A facilities for many years. This statement does not minimize the inherent dangers; rather, it indicates that the technical personnel are experienced on accelerator circuits and devices. Additionally, they are qualified to work on these systems. Every engineer, technician and electrician that is expected to work on the facility equipment is adequately trained. The training includes an awareness of potential hazards and knowledge of appropriate safety procedures and emergency response plans. Training is documented and a list of authorized personnel is kept on a network electronic database (BTMS) and available to supervisors.

DRAFT

The C-A staff is familiar with the types of electrical hazards that relate to the accelerators and experimental areas. All reasonable safety features are installed in and on the electrical equipment. The groups that maintain, repair, test and operate the equipment have the knowledge, tools and experience to perform safely. Work planning, which includes electrical safety procedures, working on or near energized conductor permits and, when required for high hazard work, job safety analyses is done to adhere to the safe practices mandated by OSHA and the BNL SBMS Subject Area on Electrical Safety. Periodic retraining improves the safety margin. Thus, the potential risk for a serious electrical shock is minimized to levels currently accepted throughout the industry.

4.10.3. Risk Assessment to Workers, the Public and the Environment

4.10.3.1. Radiation Risks

The routine radiation dose to workers is well below the DOE regulatory limits of 10CFR835. The range of doses received by C-A radiation workers in FY2007, which was a typical recent year with the RHIC nuclear physics program, was from zero to ~60 mrem. Experience shows the average exposure of C-A radiation workers is close to zero mrem during the RHIC nuclear physics program. The dose to an average C-A radiation worker is only a small fraction of the regulatory limit, and the increase in fatal cancer risk after a lifetime of radiation work, 50 years, is insignificant, <<0.06%[35] compared to the naturally occurring fatal cancer rate of nearly 20%. Additionally, data shows the radiation burden for the C-A worker has been

[35] This assumes a risk coefficient of 4×10^{-4} per rem for workers from NCRP Report No. 115, Risk Estimates for Radiation Protection (p. 112) and a 50-year career at 30 mrem per year.

DRAFT

declining for the past four decades. The risks to the public are an extremely small fraction of worker risk.

Worker doses at ERL, even including the maximum credible beam fault dose on a frequent basis, would not cause deterministic effects such as burns or tissue damage unless an individual were in the ERL accelerator cave during operations. The Access Control System, which is categorized as Safety-Significant, assures that such irradiations are not credible.

4.10.3.2. Environmental Risks from Radiation

There are no credible risks to the environment from groundwater contamination caused by ERL operations. Any spill of the insignificant levels of radioactive cooling water from a failed pipe or hose would have no environmental impact.

4.10.3.3. Fire Risks

Based on the extensive use of fire protection as determined by the BNL Fire Protection Engineer, the appropriate location of exits and the use of emergency ventilation exhaust systems, high or medium consequence levels are extremely unlikely. Thus, the fire risk is acceptable.

DRAFT

4.10.3.4. Electrical Risks

Based on the use of formal C-A electrical safety procedures, working on or near energized conductor permits and, for high hazard work, job safety analyses, high or medium consequence levels are extremely unlikely. Thus, the risk is acceptable.

4.10.4. Professional Judgment Issues

The initial screening of ERL hazards was performed using qualitative engineering judgment. The C-A engineering, operating and safety staff has many years of experience with BNL accelerators and experiments. This experience influenced the analyses of Appendix 2.

Experience has also influenced the choice of conservative maximum hourly routine and faulted beam power limits which have been used as the bases for the shielding and ALARA analyses. These judgment issues have always been and will continue to be verified by beam fault studies.

DRAFT

4.10.5. Methods Used in Evaluation of Radiological Hazards

Techniques employed in the evaluation of radiological hazards include the use of empirical formulae and graphs[36] and the Monte Carlo Program MCNPX[37]. MCNPX is probably the most widely used transport Monte Carlo code.

Past radiation dose rate measurements at C-AD accelerators have been made which show that dose equivalent and activation calculations are overestimates and should be regarded as upper limits.[38]

DRAFT

[36] NCRP Report No. 144, Radiation Protection for Particle Accelerator Facilities
[37] L. S. Waters, Ed., "MCNPX USER'S MANUAL," LANL Report TPO-E83-UG-X-0001, (1999). See also H.G. Hughes, R.E. Prael, R.C. Little, "MCNPX – The LAHET/MCNP Code Merger," X-Division Research Note, 4/22/97. The version number of the code used in this note is 2.1.5.
[38] A.J. Stevens, "Summary of Fault Studies at RHIC." BNL C-A Dept ES&F Note 156 (2000). http://server.c-ad.bnl.gov/esfd/epstechnote.html

5.Basis for Accelerator Safety Envelope

Limits for safe operations are captured in the Accelerator Safety Envelop (ASE). The ASE summarizes specific limits for hazards not routinely encountered in an industrial operation, which in this case is ionizing radiation. In addition, the ASE summarizes limitations, in a general way, derived from federal regulations or acts, DOE Orders and consensus standards (e.g., DOE Order 420.2B, OSHA, NEPA, 10CFR851, 10CFR835 and NFPA codes).

The ASE is divided into 5 Sections, and the first and second Sections address ASE administration and the limits for ionizing radiation exposure at the BNL site as a whole. Section 3 addresses specific limits for ionizing radiation at ERL. The potential sources of ionizing radiation are the klystron room, super-conducting RF electron gun, the super-conducting RF cavity, and beam loss in the electron ring. Specific ASE limits in terms of electron energy and beam power address the ionizing radiation hazard. For protection against loss from fire during periods of beam operation, when access to the primary beam areas is prohibited, the installed fire detection and protection systems will be operable, and the ASE includes this specific programmatic limitation. Finally, ASE limitations in Sections 4 and 5 summarize the practices to be used to limit operational, environmental, safety and health events routinely encountered in an industrial operation.

DRAFT

5.1. Connection between Engineered and Administrative Bounding Conditions and ASE

Radiation shields for the electron gun, beam dump and accelerator ring are adequate to attenuate ionizing radiation from these sources to less than BNL Safety Envelope Limits in the ERL ASE.

Radiation safety interlocks have to be tested and maintained as part of the Access Control System. Interlocks shut down beam and maintain personnel exposures with the BNL Safety Envelope Limits in the ERL ASE.

Unauthorized accesses through interlocked doors that lead into the accelerator enclosure shut down beam and maintain personnel exposures with the BNL Safety Envelope Limits in the ERL ASE.

The engineered method to prevent fault levels of radiation outside the shielded enclosure is accomplished by an appropriate distribution of area radiation monitors. Interlocks shut down beam and maintain personnel exposures with the BNL Safety Envelope Limits in the ERL ASE.

The engineered fire protection system limits in the ASE limit ERL programmatic loss to a level consistent with the highly protected risk status in private industry, as required in DOE Order 420.1B, Facility Safety.

DRAFT

The calibration, testing, maintenance and inspection limitations in the ASE for the engineered ODH monitoring system, radiation monitoring system, access control system, fire protection system, pressure relief devices and ODH-related ventilation system meet consensus standards and regulatory requirements in 10CFR851 and 10CFR835.

Administrative limits in the ERL ASE for control room staffing, training and qualification, work planning, configuration control, environmental management and worker safety and health meet requirements in DOE Orders 5480.19, 420.2B, 5400.5, 450.1, 435.1, 420.1B, 414.1C, 243.1 and in 10CFR851 and 10CFR835 and in BNL SBMS Subject Areas.

5.2. ASE Consideration for Routine and Non-Routine Operating Conditions

The ASE has bounding parameters to control beam loss, classify radiological areas, and control access to radiological areas. Beam faults are terminated by radiation monitors. The ASE requires area radiation monitors and routine radiation surveys in occupied areas in order to minimize radiation exposures where practicable. Routine radiological areas, radiological barriers, ALARA and radiological work are further bounded in the ASE by requiring ERL to meet requirements in the BNL Radiological Control Manual.

DRAFT

6. Quality Assurance

6.1. The Ten Management, Performance and Assessment Criteria of DOE O 414.1C

The criteria below are followed and are further explained in the referenced sections:

- Criterion 1- Program (see Section 6.2)
- Criterion 2 - Personnel Training and Qualification (see Section 6.3.1)
- Criterion 3 - Quality Improvement (see Section 6.3.2)
- Criterion 4 - Documents and Records (see Section 6.3.3)
- Criterion 5 - Work Processes (see Section 6.3.4)
- Criterion 6 – Design (see Section 6.4.1)
- Criterion 7 – Procurement (see Section 6.4.2)
- Criterion 8 - Inspection and Acceptance Testing (see Section 6.4.3)
- Criterion 9 - Management Assessment (see Section 6.5)
- Criterion 10 - Independent Assessment (see Section 6.6)

6.2. Quality Assurance (QA) Program at ERL

The Collider-Accelerator (C-A) Department and the ERL project have adopted, in its entirety, the BNL Quality Assurance Program. This QA Program describes how the various BNL management system processes and functions provide a management approach that conforms to basic requirements defined in DOE Order 414.1C, Quality Assurance.

The quality program embodies the concept of the "graded approach," i.e., the selection and application of appropriate technical and administrative controls to work activities, equipment and items commensurate with the associated environment, safety, security and health risks and programmatic impact. The graded approach does not allow internal or external requirements to be ignored or waived, but does allow the degree of controls, verification, and documentation to be varied in meeting requirements based on risk. Any variation from external safety requirements and consensus standards must be done in accordance with the processes allowed in 10CFR851, Worker Safety and Health Program. The BNL QA Program is implemented within the ERL project using C-AD QA implementing procedures. These procedures supplement the BNL Standards Based Management System (SBMS) documents for those QA processes that are unique to the C-A Department. C-AD procedures are maintained in the C-AD Operations Procedures Manual. These procedures establish an organizational structure, functional responsibilities, levels of authority, and interfaces for those managing, performing, and assessing work. They also establish management processes, including planning, scheduling, and providing resources for work.

The C-AD QA philosophy of adopting the BNL Quality Program and developing departmental procedures for the implementation of quality processes within C-AD ensures that complying with requirements is an integral part of the design, procurement, fabrication, construction and operation of the ERL Prototype.

A Quality Representative serves as a focal point to assist C-AD management in implementing QA program requirements. The Quality Representative has the authority,

DRAFT

unlimited access, both organizationally and facility-wise, as personnel safety and training allows, and the organizational freedom to:

- assist line managers in identifying potential and actual problems that could degrade the quality of a process/item or work performance
- Recommend corrective actions
- Verify implementation of approved solutions

All ERL personnel have access to the C-AD Quality Representative for consultation and guidance in matters related to quality.

6.3. QA Activities That Impact Protection of Worker, Public or Environment

6.3.1. Personnel Training and Qualifications

The BNL Training and Qualification Management System within the Standards Based Management System (SBMS) supports C-AD management's efforts to ensure personnel working at the ERL Prototype are trained and qualified to carry out their assigned responsibilities. The BNL Training and Qualification Management System is implemented within the C-A Department with the C-AD Training and Qualification Plan of Agreement. C-AD provides continuing training to personnel to maintain job proficiency.

DRAFT

6.3.2. Quality Improvement

C-AD has established and implemented processes to detect and prevent problems with the quality of the work and vendor purchases. The Department identifies, controls, and corrects items, services, and processes that do not meet established requirements. ERL staff identifies the causes of problems, and includes prevention of recurrence as a part of corrective action planning. The Department has programs to periodically review item characteristics, process implementation, and other quality-related information to identify items, services, and processes needing improvement.

The BNL Quality Management System, supplemented by C-AD procedures, provides the requirements to identify, document and disposition nonconformance and to establish appropriate corrective and preventive actions that are based on identified causes. The BNL Quality Management System provides guidance for trending nonconformance to recognize recurring, generic or long-term problems.

The decision to initiate quality improvement is based upon an evaluation of the seriousness, and the adverse cost, schedule, safety and environmental impact of the nonconformance relative to the cost and difficulty of its correction. In some cases, corrective action of a nonconformance may not be feasible in the near term, and equivalent protections are used.

DRAFT

The C-AD Self Assessment Program provides information on scientific, business and operational performance for management, staff, customers, stakeholders and regulators associated with ERL. Self-assessment also provides a mechanism for improving the rules that govern training and qualifications, documents and records, work process, design, procurement, inspection and testing, and the assessment process itself. The Self-Assessment program evaluates performance relative to critical outcomes and internal performance objectives in order to identify strengths and opportunities for improvements.

6.3.3. Documents and Records

The C-AD prepares reviews, approves, issues, uses, and revises documents to prescribe processes, specify requirements, or establish design for the ERL Prototype. Additionally, the C-AD specifies, prepares, reviews, approves and maintains ERL Prototype records.

The BNL Records Management System and controlled document Subject Areas within SBMS, supplemented by C-AD procedures, provide the requirements and guidance for the development, review, approval, control and maintenance of documents and records.

ERL documents encompass technical information or instructions that address important work tasks, and describe complex or hazardous operations. They include plans, procedures, instructions, drawings, specifications, standards and reports.

DRAFT

Records are information of any kind and in any form, created, received and maintained as evidence of functions, policies, decisions, procedures, operations, or other activities performed within the Department. Records are retrievable for use in the evaluation of acceptability, and verification of compliance with requirements. Department records are protected against damage, deterioration or loss.

6.3.4. Work Process

Work is performed employing processes deployed through the BNL SBMS. SBMS Subject Areas are used to implement BNL-wide practices for work performed. Subject Areas are developed in a manner that provides sufficient operating instructions for most activities. However, C-AD management has determined that it is appropriate to develop internal procedures to supplement the SBMS Subject Areas. Procedures provide C-AD and ERL managers with a critical management tool to communicate detailed expectations for how individual workers are to perform specific tasks. Internal technical procedures are bounded by the requirements established by the BNL Subject Areas. Technical procedures and checklists tend to follow the DOE Standard 1029-92, Writer's Guide for Technical Procedures. Departmental policy and goal-setting documents are also written in the form of procedures, and they follow this same Writer's Guide where applicable; however, they are more narrative in style.

Group leaders and technical supervisors are responsible for ensuring that employees under their supervision have appropriate job knowledge, skills, equipment and resources

DRAFT

necessary to accomplish their tasks. C-AD and ERL sub-contractors and vendors are held accountable to implement this same practice.

The BNL Quality Management System, supplemented by C-AD procedures, provides processes for identifying and controlling items and materials to ensure their proper use and maintenance to prevent damage, loss or deterioration.

C-AD management has identified those processes requiring calibrated measuring and testing equipment. Item identification and control requirements are specified, when necessary, in appropriate documents, e.g., drawings, specifications and instructions. Materials undergoing tests or inspections are controlled to avoid mixing acceptable items with items of unknown origin or history, thus avoiding inadvertent use.

C-AD management delegates authority to all C-AD personnel to "Stop Work" to avoid unsafe work practices.

6.4. QA Activities That Impact Accelerator Maintenance and Operations

6.4.1. Design

The C-AD staff plans, develops, defines and controls the design of the ERL Prototype in a manner that assures the consistent achievement of objectives for productivity, performance, safety and health, environmental protection, reliability, maintainability and availability. Design

DRAFT

planning establishes the milestones at which design criteria, standards, specifications, drawings and other design documents are prepared, reviewed, approved and released.

The design criteria define the performance objectives, operating conditions, and requirements for safety and health, reliability, maintainability and availability, as well as the requirements for materials, fabrication, construction, and testing. Appropriate codes, standards and practices for materials, fabrication, construction, testing, and processes are defined in the design documentation. As indicated in 10CFR851, nationally recognized codes and consensus standards are used. If national consensus codes are not applicable because of experimental restrictions, then C-AD implements appropriate DOE-defined processes to provide equivalent protection. In this way, C-AD and ERL ensure a level of safety greater than or equal to the level of protection afforded by the national codes and standards.

Specifications, drawings and other design documents are used to represent verifiable engineering delineations, in pictorial and/or descriptive language, of parts, components or assemblies in the ERL prototype. These documents are prepared, reviewed, approved and released in accordance with C-AD procedures. Changes to these documents are processed in accordance with the C-AD configuration management procedures.

6.4.2. Procurement

Personnel responsible for the design or performance of items or services to be purchased ensure that the procurement requirements of a purchase request are clear and complete. Using

DRAFT

the graded approach, potential suppliers of critical, complex, or costly items or services are evaluated in accordance with predetermined criteria to ascertain that they have the capability to provide items or services that conform to the technical and quality requirements of the procurement. The evaluation includes a review of the supplier's history with BNL or other DOE facilities, or a pre-award survey of the supplier's facility. C-AD personnel ensure that the goods or services provided by the suppliers are acceptable for intended use.

6.4.3. Inspection and Acceptance Testing

The BNL Quality Management System within the SBMS, supplemented by C-AD procedures, provides processes for the inspection and acceptance testing of an item, service or process against established criteria and provides a means of determining acceptability. Based on the graded approach, the need and/or degree of inspection and acceptance testing are determined during the activity/item design stage. Inspection/test planning has as an objective the prompt detection of nonconformance that could adversely affect performance, safety, reliability, schedule or cost.

When required, acceptance and performance criteria are developed and documented for key, complex or critical inspection/test activities. If an item is nonconforming, it is identified to avoid its inadvertent use. These processes also specify how inspection and test status are indicated either on the item itself, or on documentation traceable to the item.

DRAFT

The BNL Calibration Subject Area, supplemented by C-AD procedures, describes the calibration process for measuring and test equipment. ERL management identifies appropriate equipment requiring calibration. The calibration status is readily discernible and associated calibration procedures, documentation, and records are prepared and maintained. Calibrated equipment is properly protected, handled and maintained to preclude damage that could invalidate its accuracy. Measuring and test equipment found out of calibration is identified and its impact evaluated.

6.5. Management Assessment

The managers of the four C-AD Divisions periodically evaluate or "self-assess" the effectiveness of the C-AD organization and present their report to senior management. Through the C-AD Self-Assessment Program, a regular, systematic evaluation process has been established wherein C-AD assesses internal management systems and processes used to make fact-based decisions. For example, see the C-AD Assessment Web Page. The C-AD Self-Assessment Program extends to the operation of the ERL prototype and includes such items as: performance measures; compliance checks; effectiveness evaluations; job assessments; surveys; and environment, safety and health walk-throughs. Strengths and opportunities for improvement are identified. Assessment results are documented and fed back to managers, and provide valuable input into the business-planning process.

C-AD's Environment Management System and Occupational Safety and Health (OSH) Management System and associated activities also undergo management review each year. In

DRAFT

addition, these management systems are reviewed by third-party registrars, and federal, New York State and County agencies. Together these reviews provide comprehensive and objective information used by C-AD management in establishing strategic direction and improving environmental and OSH performance.

6.6. Independent Assessment

Using the graded approach, C-AD Management periodically evaluates the implementation of the BNL Management Systems, SBMS Subject Areas and Department-level procedures. This is done through reviews, assessments and/or other formal means. The C-AD QA Group performs these assessments. They include an evaluation of the safety and quality cultures in terms of the adequacy and effectiveness of the management structure, which includes, but is not limited to, environment, safety and health, security, quality, conduct of operations, and training requirements.

Individuals verifying these activities have sufficient authority to access work area, and organizational freedom to accomplish the following: identify problems, initiate, recommend, or provide solutions to problems through designated channels, and verify implementation of solutions.

All assessments are planned and conducted using established criteria. The type and frequency of these assessments are based on the status, complexity and importance of the work or process being assessed. The results are documented, non-conformances and recommendations

DRAFT

identified and presented to C-A Department management. The Department develops corrective actions to promote improvement. Actions are tracked to closure by C-AD QA in the Family version of the BNL Assessment Tracking System (ATS). Those conducting independent assessments are technically qualified and knowledgeable in the areas assessed and are independent from the activities assessed. Where necessary, subject matter experts are involved in the assessments to give insight into a particular area.

In addition, peer review is a process used at C-AD by which the quality, productivity and relevance of science and technology programs is monitored and evaluated. In operational and ESH arenas, peer review is used to evaluate and independently verify engineering design and procedure implementation.

DRAFT

7. Post-Operations Planning

7.1. Structural and Internal Features That Facilitate Future Decommissioning/Dismantling

Concrete block was used to create the walls and labyrinths for the ERL Prototype. See figure below. This concrete is re-usable and when not in use, it is stacked inside Building 912.

Additionally, significant portions of the following items are likely to be recycled or reused:

- Superconducting RF Cavity - The 5-cell SRF cavity may be used in RHIC. If C-AD does not use it in RHIC, the cryostat will still be useable, so it is only the niobium cavity that may become "waste". If so, it is not toxic, it will not be activated, and it may be sold to a metals dealer and recycled.
- RF Systems for Superconducting Injector and Superconducting Cavity will be recycled or re-used.

- The laser system used for the ERL will be reused. Slight modifications may be needed if there are changes in the operating parameters. The same would be true for the optical components. Neither the laser nor the optical components produce radioactive or hazardous waste.
- Cryogenic, vacuum, magnet and electrical hardware will be re-cycled or re-used.
- The ERL electron beam dump system will be used as a spare for the RHIC electron beam cooler. The dump is made of Cu and 304L stainless steel; it has an Al support structure with G-10 insulators. Low levels of activation are expected.
- Beam instrumentation will likely be re-used or recycled.
- Conventional facilities (e.g., cables, electrical distribution panels, cable tray) will be recycled or reused.

7.2. Operations Considerations to Minimize the Generation of Radiological and/or Hazardous Materials

The C-AD participates in ISO 14001 registrations each year for environmental management and conducts a review of all existing process assessments and performs an initial assessment for each new process introduced in that year. Each assessment consists of the following topics:

- Detailed process descriptions and waste determination
- Regulatory determination of process outputs
- Waste minimization, opportunities for pollution prevention
- Assessment prevention and control for hazardous and radioactive materials

DRAFT

For example, the ERL closed-loop cooling water system transfers heat from the ERL magnets and cryogenic compressors to cooling water and then indirectly rejects the heat utilizing a heat exchanger to cooling tower #3 (see Figure 7.2). Cooling water from tower #3 directly rejects heat to air utilizing the cooling tower. Based on the process assessment, the following practices were implemented at ERL in order minimize the generation of and on-site storage of radioactive and hazardous materials:

- Water drained or otherwise collected from the ERL primary loop is collected in tanker trailers where it is stored for reuse/recycle, or evaporated or disposed of as radioactive waste
- No biocide or corrosion inhibitors are added to the ERL water system
- Spent filters are sent to off-site for disposal as low-level radioactive waste every 1 to 2 years
- Spent deionizer resin is exchanged on-site approximately every two years and the resins are drummed, sampled and disposed based on sample analysis results

Figure 7.2 ERL Prototype Cooling Water Process Flow Diagram

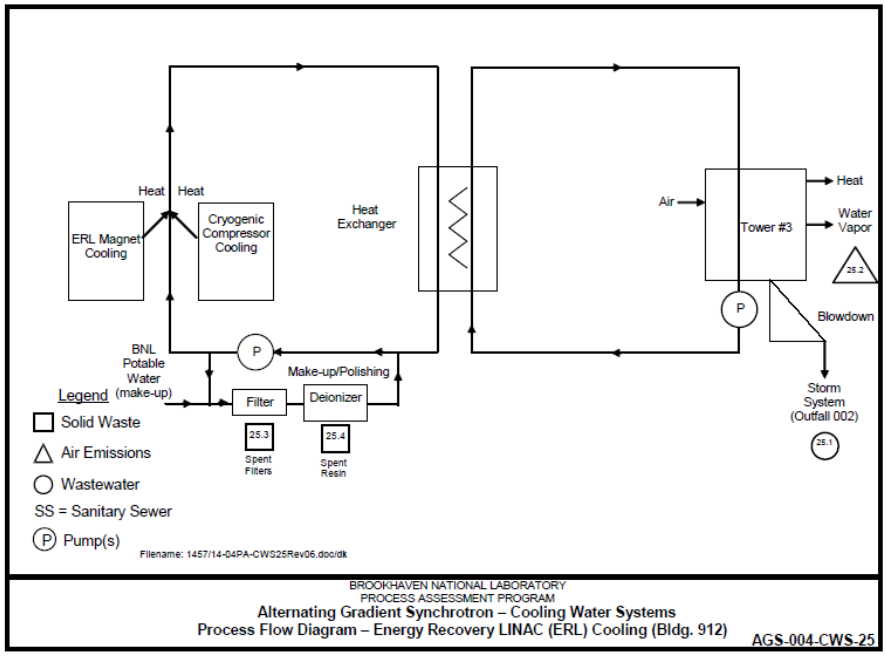

DRAFT

In addition to cooling water, this type of process evaluation is done for all ERL related operations that use or generate hazardous and radioactive materials including:

- Beam line construction and disassembly
- Magnet cleaning
- Electronic assembly
- Beam stops and collimators
- Materials storage
- Mechanical assembly
- Plating and tinning
- Cryogenic systems
- Vacuum systems
- Tech shop activities

7.3. Long-Term Records Management to Facilitate Post-Operations Activities

The following line-organization records are maintained to facilitate post operation activities:

DRAFT

ERL Records to Facilitate Post-Operations Activities

Topic
Occupational Health & Safety Management System Description
Occupational Health & Safety Management Plans
Risk Assessments Files
OSH Management Reviews And OSH Records Of Decision Documents
OSH Internal Assessments and Audits
WOSH Committee Records (Worker Safety Committee)
Training Records
Safety Committee Records
Local Emergency Planning Documents
Emergency Contingency Plans
Tier 1 Facility Safety Inspections
Safety Assessment Documents and Safety Analysis Reports
Work Planning And Control Documentation
Environmental Permits
Experimental Safety Reviews
Occurrence Reports
Operating Manuals
Safety Equipment Records
Records of Roles, Responsibilities, Authorities and Accountabilities for Employees
Process Assessments
Environmental Assessments
Cooling Water System Records
Maintenance Records

DRAFT

7.4. Waste Management of Radiological and Hazardous Material Generation During Post Operations Period

Waste management post ERL Prototype operations will be based on radiological conditions at the time of final shutdown of the ERL Prototype. The approach will factor in the effectiveness of the methods to achieve the desired end-point of the remaining facility. Much of the ERL facility, such as support buildings and control areas, do not have radioactive or hazardous materials and will require only standard waste management techniques. Based on the projected low-

levels of activation of beam line components, they will be able to be contact handled. A post operations waste management plan will be developed at the end of ERL facility life. The plan will address the conditions and hazards in detail and will have the benefit of additional information and waste management technologies not yet available.

8.References/Glossary/Acronyms

8.1. List of Documents That Provided Supporting Information for the SAD

8.1.1. Accelerator Safety Implementation Guide for DOE O 420.2, Safety Of Accelerator Facilities, Office of Science, Department of Energy, May 1999.

8.1.2. Accelerator Safety Subject Area

8.1.3.C-AD Conduct of Operations Matrix

8.1.4. Collider-Accelerator Department Fire Hazards Analyses

8.1.5. Operations Procedure Manual for Collider-Accelerator Department

8.1.6. Radiological Control Manual

8.2. List of Acronyms

AC – Alternating Current

ACS – Access Control System

AHJ – Authority Having Jurisdiction

AISC - American Institute of Steel Construction

DRAFT

ALARA – As Low As Reasonably Achievable

ANSI – American National Standards Institute

ASE – Accelerator Safety Envelope

ASME - American Society of Mechanical Engineers

ASSRC – Accelerator Systems Safety Review Committee

ASTM - American Society for Testing and Materials

ATS – Assessment Tracking System

AVS – American Vacuum Society

AWS – American Welding Society

BHSO – Brookhaven Site Office

BNL – Brookhaven National Laboratory

BSA – Brookhaven Science Associates

BTMS – Brookhaven Training Management System

C-A – Collider-Accelerator

CA – Controlled Access

CAS – Collider-Accelerator Systems Watch

CEE – Chief Electrical Engineer

CFR – Code of Federal Regulations

CGA – Compressed Gas Association

DRAFT

CME – Chief Mechanical Engineer

DC – Direct Current

DOE – Department of Energy

DOT – Department of Transportation

ECR – Environmental Compliance Representative

EMS – Environmental Management System

EPA – Environmental Protection Agency

ES&F – Experimental Support and Facilities Division

ESH – Environment, Safety and Health

ESHQ – Environment, Safety, Health and Quality

ESRC – Experimental Safety Review Committee

FHA – Fire Hazards Analysis

FUA – Facility Use Agreement

HV – High Voltage

HVAC – Heating, Venting and Air Conditioning

ISM – Integrated Safety Management

ISO – International Standards Organization

LE – Liaison Engineer

LEC – Local Emergency Coordinator

LP – Liaison Physicist

DRAFT

LOTO – Lock Out / Tag Out

MCNPX – Monte Carlo Neutron Photon Transport Computer Codes

MCR – Main Control Room

MPFL - Maximum Possible Fire Loss

MS – Management System

NEPA – National Environmental Policy Act

NESHAP - National Air Emission Standards for Hazardous Air Pollutants

NFPA – National Fire Protection Association

NYS – New York State

OPM – Operations Procedure Manual

ORPS – Occurrence Reporting and Processing System

OSHA – Occupational Safety and Health Administration

OSH – Occupational Safety and Health

P2 – Pollution Prevention

PE – Plant Engineering

PLC – Programmable Logic Controller

PPE – Personal Protective Equipment

QA – Quality Assurance

R2A2 – Roles, Responsibilities, Accountabilities and Authorities

RadCon – Radiological Control

DRAFT

RCT – Radiological Control Technician

RF – Radio Frequency

RFQ – Radio Frequency Quadrupole

RHIC – Relativistic Heavy Ion Collider

RSC – Radiation Safety Committee

RWP – Radiation Work Permit

S&T – Science and Technology

SAD – Safety Assessment Document

SBC – Standard Building Code

SBMS – Standards Based Management System

SCDHS – Suffolk County Department of Health Services

SFPC – Standard Fire Prevention Code

SPDES – State Pollution Discharge Elimination System

TLD – Thermo-Luminescent Dosimeter

UL- Underwriters Laboratories

UPS – Uninterruptible Power Supply

WOSH – Worker Occupational Safety and Health

DRAFT

APPENDIX 1

Shielding Analyses

Simple Estimate of ERL Radiation
D. Beavis
August 1, 2006
Updated August 9, 2006

Simple estimates are made for the potential radiation sources in the ERL R&D test setup. The dose rates are based on thick target formulas for high Z targets. The dose rates should be a conservative estimate of the dose rates that could occur due to beam losses. The goal is to obtain an overall view of the shielding issues at an order of magnitude level.

3.5 MeV Electron Beam

Recently the maximum electron gun energy has been lowered from 5 MeV to 3.5 MeV. The potential radiation from beam losses can be estimated from thick target curves given in various references (see ref. 1). The numbers are given at 1 meter from a localized source.

3.5 MeV e- losses rad/(hr-kW)

0 degrees	$4*10^4$
90 degrees	$8*10^3$

The 3.5 MeV beam has a maximum power of 1000 kW. The beam will be transported to the beam dump. The dump must have local shielding to reduce this to levels that are appropriate for the shielding enclosure. The energy of this beam is too low to generate neutrons.

25 MeV Electron Beam

Recently the electron beam energy for the ERL ring has been lowered from 54 MeV to 25 MeV. Using the same reference and assumptions the dose rates at 1 meter are:

25 MeV e- losses rad/(hr-kW)

0 degrees	$8*10^5$
90 degrees	$8*10^3$

The beam energy is sufficiently high in energy to generate neutrons via giant dipole resonance. It will be assumed that the target material is iron. The neutrons are essentially isotropic. The dose rate at 1 meter is (see ref 2):

Neutrons rem/(hr-kW)
430

Non-Beam Sources

The electron gun and the 5-cell accelerating cavity will generate x-rays. The level of x-rays is uncertain but it is assumed that they will be capable of generating dose rates similar to the RF cavities at RHIC. The RHIC observed dose rate of **100 rad/hr at 1 meter** will be assumed.

DRAFT

Beam Losses

The 3.5 and 25 MeV beams are expected to operate with low routine losses. The 5 MeV beam will have a collimator, which will most likely require local shielding. The beam dump will be designed for absorbing the entire 1000 kW of 3.5 MeV beam. The routine loss is expected to be low after the collimator. The power supply system is capable of generating sufficient power to sustain a 1 MW accidental loss. However, large accidental losses may cause damage, which terminates the operation. It is not clear what limits on the beam losses will cause self-termination. Until a self-limiting mechanism is understood we will assume 1 MW can be sustained. Routine losses at unshielded locations are expected to be less than 1 W. The maximum sustainable loss of the 25 MeV beam has been established as 50 kW, which is the limit of the RF power supply. The 25 MeV beam is expected to have routine losses at least a 1000 times lower than the max. sustainable loss, i.e. 50 W.

It is proposed that two beam current transformers be used in differential mode to limit the level of routine losses for both the 3.5 MeV and 25 MeV beams. The first transformer will be located after the collimator in the 3.5 MeV transport. The second will be located in the 3.5 MeV transport to the beam dump. Comparing the difference will establish a net loss of beam in both the 3.5 and 25 MeV transports between the transformers. The plan is to have the configuration of this transformer system under the control of the access control group similar to the B20 transformers in the AGS. A specification will be prepared and presented to a vendor to see if it is achievable. It will be assumed that the system will be accurate for differences of 10^{-3} (conservative) and it is hoped that it will be capable of measuring differences of 10^{-6}. The table below summarizes (crudely) the present sustainable losses for the beams:

Beam (MeV)	Beam Power (kW)	Max. Sustainable loss (kW)	Max. Sustainable loss with transformer at10^{-3}
3.5	1 MW	1 MW	1 kW
25	10MW	50 KW	10 kW

We can use this table to generate the maximum sustainable radiation dose rates from beam losses. These numbers are summarized in the table below:

Dose rates at 1 meter in rad/hr (rem/hr for neutrons)

condition	Max. Loss	Max. Loss with transformer (10^{-3})	Routine
3.5MeV@ 0 deg.-ph	$4*10^7$	$4*10^4$	40
3.5MeV@ 90 deg.-ph	$8*10^6$	$8*10^3$	8
25 MeV@ 0 deg.-ph	$4*10^7$	$8.*10^6$	$4*10^4$
25 MeV @ 90 deg-ph	$4*10^5$	$8.*10^4$	$4*10^2$
25 MeV- neutrons	$2.1*10^4$	$4.3*10^3$	$2.1*10^1$

DRAFT

Radiation Through Shield Walls

The radiation levels outside the shield walls can be estimated using "tenth-value layers" given for broad beams of electrons and neutrons on shielding material. For the photon shielding the values used for forward (zero-degree) shielding are (see ref. 3):

Energy-material	First TVL (gm/cm^2)	Equilibrium TVL (gm/cm^2)
3.5 MeV- Concrete	60	60
3.5 MeV- Fe	67	67
3.5 MeV- Pb	55	55
25 MeV- Concrete	120	110
25 MeV- Fe	85	85
25 MeV- Pb	60	60

For 25 MeV electrons the TVLs for concrete at 90 degrees are substantially smaller than above and are 85 gm/cm^2 for the first TVL and 80 gm/cm^2 for the following layers (see ref. 4).

The neutron TVLs for concrete (see ref. 5) that are used are 100 gm/cm^2 for the first TVL and 80 gm/cm^2 for all other layers.

The source terms need to be scaled to the expected dose rate at the shielding wall. A distance of 3 meters will be used for this purpose, which is an appropriate distance for the beam line close to the shield wall. This gives a reduction of 1/9. It is then assumed that the dose rate is constant across the portion of wall and the attenuation of the shielding is calculated using the TVLs. The concrete walls are 48 inches thick (287 gm/cm^2).

Dose rates outside 48 inch Concrete Shield (3 meters from source)

condition	Max. Loss	Max. Loss with transformer (10^{-3})	Routine
3.5MeV@ 0 deg.-ph	73 rad/hr	73 mrad/hr	0.07 mrad/hr
3.5MeV@ 90 deg.-ph	15 rad/hr	15 mrad/hr	0.01 mrad/hr
25 MeV@ 0 deg.-ph	13,000 rad/hr	2600 rad/hr	13 rad/hr
25 MeV @ 90 deg-ph	13 rad/hr	2.7 rad/hr	13 mrad/hr
25 MeV- neutrons	1.2 rem/hr	240 mrem/hr	1.2 mrem/hr

The present shielding coupled with the loss assumptions is not sufficient for the photons generated by the 25 MeV electron beam. The beam current transformer interlock and chipmunks outside the shielding probably provide acceptable protection for the other operating conditions. 2-4 orders of magnitude more attenuation for the high-energy photons is required. 10^{-2} attenuation in the forward direction requires 37 inches of concrete, or 8.7 inches of steel, or 4.3 inches of Pb. This would require a thicker shield wall or shielding placed close to the beam line to shield the forward losses.

DRAFT

The present shielding for 90-degree losses of the 25 MeV electron has an attenuation of $3*10^{-4}$. This will be useful for comparison with the attenuation through penetrations in the shielding.

Straight Penetrations Through the Shielding

A simple discussion of the attenuation of straight holes in shielding can be found in Sullivan (see ref. 6). For directional radiation the attenuation depends on the angle between the direction of the radiation and the axis of the hole. For the 90-degree losses most of the penetrations at the ERL R&D test area are at about 45 degrees (close loss) and 24 degrees (far loss). The attenuation for the smaller angle is less but the increased distance to the source also reduces the radiation. For the present discussion the data at 45 degrees will be used with the source evaluated at 3 meters. As can be seen from ref. 6 figures 2.25 and 2.26 the attenuation of neutrons and photons is similar for these angles and the attenuation given for hadrons in ref. 6 figure 2.27 will be used. In addition a formula for neutrons given by Goebel (see ref 7) is used. The attenuation for penetrations through the 48 inch shield wall are listed by the diameter area below:

Diameter (in)	Area (in^2)	Attenuation via Sullivan	Attenuation via Goebel
2	3	$1.2*10^{-3}$	$5.6*10^{-5}$
4	12	$7*10^{-3}$	$5*10^{-4}$
8	49	$4*10^{-2}$	$3.7*10^{-3}$
12	108	$1.1*10^{-1}$	$1.1*10^{-2}$

The Goebel formulation gives attenuations about a factor of 10 smaller than Sullivan. The Goebel formula appears to agree with the values of Sullivan at larger angles, about 75 degrees. For now we will use the more conservative number of Sullivan. The two-inch diameter penetration would have a dose rate about 4 times higher than the shield wall for 25 MeV electron large angle losses. This would probably be acceptable but is not a useful size. The larger holes could be acceptable provided personnel cannot occupy the area near the penetration exit. This simple treatment does not include contributions from reflections from surfaces. Many of the penetrations are near the ceiling and can obtain contributions from radiation reflecting off the ceiling.

Several of the straight penetrations are substantial in size and personnel can approach the exit of the penetration while the machine is operating. These are of special concern and are listed below:

Penetration	Area (in^2)
Cable tray into second floor	288
Wave guide for 5-cell cavity	90
Wave guide for RF-Gun	288

These penetrations are sufficiently large in area and short that they provide essentially no attenuation and require reconsideration. The cable tray port could be divided into distributed smaller ports. The wave-guides must remain the same dimension and therefore the only option to

DRAFT

improve the attenuation is to make these penetrations as multi-legged penetrations. Where possible all penetrations should be multi-legged.

Multi-legged Penetrations

The attenuation of neutrons in a multi-legged labyrinth can be calculated using the formulation of Goebel. A penetration for the wave-guide with dimensions 8 inches high by 12 inches wide and with two 18-inch long legs and one 48-inch long leg has an attenuation for neutrons of $1.1*10^{-5}$. The attenuation of photons through the labyrinth should be smaller since the reflection coefficients are smaller for photons than neutrons (see ref. 8). The design of the bends must take into account the potential for neutrons or photons to penetrate through the walls of the bends and "short-circuit" the labyrinth ("punch-through").

There are 4 existing multi-legged labyrinths at present in the shielding. Personnel and equipment access ways are located at the north and south ends of the test area. A utility trench exits under the east and west walls at the south end of the area. The two access ways have been crudely estimated assuming they are 3-legged labyrinths with a factor of 4 to account for the increased size of the openings. The attenuation for each access way is a few 10^{-3} attenuation with a large error. When treated as a two-legged labyrinths the access ways have attenuations of a few 10^{-2} . The attenuations for photons should be lower as noted above. These should be evaluated more carefully in the future. The two trench exits are not calculated here since the geometry does not lend easily to a labyrinth formula. They need to be evaluated in the future or since they are not be used blocked with shielding.

Conclusions

Simple techniques have been used to make simplistic estimates of the dose rates due to beam losses in the ERL R&D test area. Most of these estimates can be considered conservative and offer a general guide for resolving the open issues in the shielding design. These estimates are not intended to replace detailed Monte Carlo calculations where needed. The main unresolved issues at present are the shielding of the photons in the forward direction, the straight penetrations, and the cracks (not discussed here).

References

1) NCRP Report No. 144, Figure 3.5.
2) NCRP Report No. 144, Figure 3.12, and a flux to dose conversion factor.
3) NCRP Report No. 144, Figure 4.1.
4) NCRP Report No. 144, Table 4.2.
5) W.P. Swanson, Radiological Safety Aspects of the Operation of Electron Linear Accelerators, 1979, Figure 52.
6) A.H. Sullivan, A Guide to Radiation and Radioactivity Levels Near High Energy Particle Accelerators, 1992.
7) K. Goebel et. al., "Evaluating Dose Rates Due to Neutron Leakage Through the Access Tunnels of the SPS", CERN LABII-RANote/75-10(1975).
8) NCRP Report No. 144, Figures 4.12 and 4.13.

DRAFT

The effectiveness of a Two-Foot Thick Inner Heavy Concrete Wall
D. Beavis
Dec. 11, 2006

The outside shield wall of the ERL test area is four feet of light concrete. This shield does not provide sufficient (ref. 1) attenuation for the potential radiation from forward faults of the 25 MeV electron beam. Various schemes have been suggested for introducing shielding close to the beamline for additional radiation reduction. In this note the effectiveness of using two feet of heavy concrete as an inner shield wall will be examined. It will be concluded that this should provide sufficient reduction of the radiation.

MCNPX (Ref. 2) can be used to estimate the dose due to photons. Azimuthal symmetry will be used for the problem. The front face of the target is placed 300 cm in front of the four feet thick light concrete shield wall. The 25 MeV beam strikes the front of the target with a direction perpendicular to the shield wall. Initial calculations are done with the existing light concrete wall and then a two feet thick layer of heavy concrete is added 1 meter from the target. The photon doses are tallied on the inner and outer surface of the light concrete wall.

The composition of heavy concrete was obtained by supplementing the composition of the light concrete with iron to achieve a density of 3.5gm/cc. The density for light concrete is 2.35 gm/cc. The compositions by atomic fractions are given in Table I.

Table I. Atomic Fractions

atom	Light concrete	Heavy concrete
H	0.135	0.107
O	0.6529	0.515
Si	0.1185	0.094
Al	0.0182	0.014
Ca	0.0754	0.060
Fe	0.0	0.21

The target used for the calculations was a steel cylinder with a radius of 2 cm and a length of 5 cm. Most materials close to the beam are similar in atomic number to iron so steel was a natural choice for the target material. The forward losses of electrons and photons typically have several inches of steel equivalent in their path due to the beampipe, quadrupoles, and dipoles. The sensitivity to the target geometry was examined and some results for the forward position (radius<15cm) on the inner surface of the light concrete shield wall are shown in Table 2. The dose at large distances can decrease as the target becomes thin and more of the electron energy is lost in the initial part of the concrete wall rather than the target. Although smaller targets can give higher radiation doses on the shield wall it was decided that the target parameters above were a reasonable approximation for the target mass.

DRAFT

Table 2. Photon Dose at R<15cm

Target Length (cm)	Target Radius (cm)	Rem per Incident electron
10	2	1.2E-14
5	2	4.4E-14
2.5	2	8.1E-14
1.5	2	1.1E-13
1.5	1	1.1E-13
1.5	0.5	1.1E-13
0.75	0.5	1.3E-13

The dose as a function of distance from the beam axis is shown in Figure 1. The data are averaged over radial bins ranging from 15cm to 50 cm in width. The red circles display the photon dose on the inner surface of the concrete wall. The green squares show the dose on the outside of the four feet of light concrete. The radial bin with R<15cm has the dose decrease by 0.0015 after 4 feet of light concrete. The blue triangles display the dose on the inner surface with the heavy concrete wall present. The dose for R<15 is reduced by 0.005. The application of concrete and steel TVLs would have given a reduction of 0.007 (see Ref. 1). The statistics in the simulation are not sufficient to extract the dose at the outer surface. The factor of 0.0015 from the light concrete can be used to estimate the dose for R<15cm on the outer surface to be 3.3E-19 rem/e.

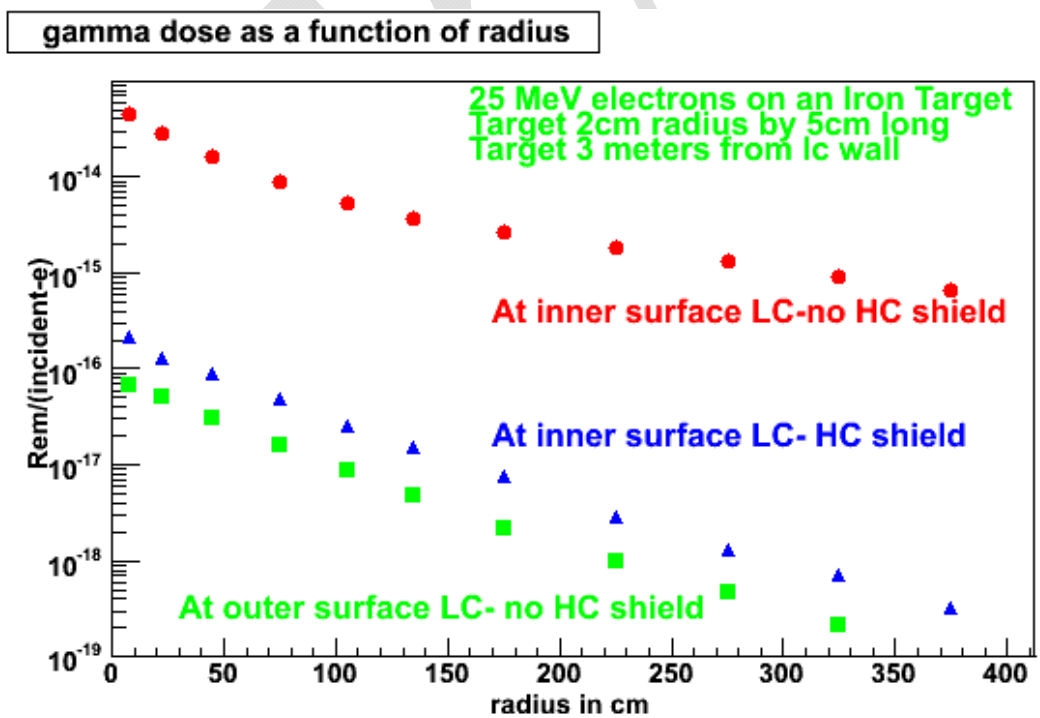

The dose rate can be estimated assuming a rate of beam loss. A 50kW beam loss (0.926 mA) has an estimated dose rate of 3000 rem/hr (R<15cm) for the configuration without the inner heavy concrete wall. This result compares well with a thick target formula with concrete TVL's, which would estimate 6600 rem/hr (Ref. 1 with geometry differences taken into account). The addition of the two feet of heavy concrete reduces the maximum dose to 15 rem/hr for a 50 kW beam loss. Most situations have the source of forward radiation at greater distance from the shield wall and have a non-zero angles to the shielding. The routine losses are expected to be at least 1000 times lower than a 50 kW loss.

9.Conclusions

A simple estimate of the dose rate outside the ERL test area sidewall shielding is made incorporating a proposed two-foot thick inner heavy concrete wall. The estimate of 15 rem/hr for a 50 kW beam loss would be within guidelines with chipmunks distributed to detect large beam losses. Actual beam loss configurations are expected to have reduced radiation due to increased distance and angles relative to the shielding. In addition, a 50 kW localized beam loss is not expected to be possible.

References

D. Beavis Memorandum, "Simple Estimate of ERL Radiation", August 9, 2006.
D. B. Pelowitz,Ed. "MCNPX User's Manual, Version 2.5.0", April 2005; version 2.5f was used for these calculations

DRAFT

Dose Rate Estimates for ERL Penetrations

March 26, 2008
D. Beavis

Introduction

Dose estimates for the penetrations in the ERL facility are provided. The estimates use a combination of simple source terms and estimates of the attenuation of the radiation as it propagates through the opening. The estimates provided in this document are intended to be crude order of magnitude estimates. Conservative assumptions are usually used so that the estimates represent upper limits for the potential dose rates. The low-intensity commissioning process of the RF-gun, five-cell cavity, and transport of the low energy and high energy electron beams will be used to verify the source terms and radiation transport through the shielding and penetrations.

Figure I is a plan view of the shielded area of the facility. There are approximately 20 penetrations through the external shielding. Two of these penetrations are used for personnel and equipment access. Several of the penetrations are buss blocks containing several dozen small penetrations for access of utilities. Other penetrations are intended for electrical cables, cryogens, gas exhaust, laser beam, etc. The overall features are a superconducting RF gun, a five-cell superconducting energy recovery linac (ERL), low energy beam transport to the beam dump, and the 25 MeV electron ring. The side walls are composed of between four and eight feet of light concrete. The thin sections of wall are shadowed from the potential sources with inner shield walls located appropriately. The entire facility has a single layer of light concrete roof beams four feet thick, except for a transition region where the roof is two layers of roof beams. This transition region is where the 13 foot ceiling height in the center is reduced to 9 feet at both ends.

There are restrictions on access for the facility areas. Access into the machine area is prevented by dual interlocks when the machine is operational. This includes the operation of the electron beams, the RF-Gun and five-cell cavity. Personnel will not be allowed on the roof during operations. Personnel will not be allowed in the 1 megawatt power supply room during operations. A substantial area between the adjacent experimental building and the ERL shielding on the west side will be fenced and locked with personnel excluded during operations or with limited access.

The radiation sources are predominately x-rays and gamma rays. The 25 MeV electron beam is capable of generating neutrons. Only in conditions where substantial high-Z shielding materials have been used or where it takes many bounces for radiation to get through a penetration is it possible for the neutron dose rates to dominate the x-ray dose rates.

The shielding is evaluated for two types of exposures, chronic and fault conditions. As will be discussed below the dose rates during fault conditions are typically many orders of magnitude larger than that of the chronic (routine) conditions. The penetrations will not be considered for the chronic dose to personnel since the areas around the penetrations are typically not occupied

DRAFT

and they can be posted for localized elevated dose rates. The penetrations are considered as an issue for dose to personnel during a fault condition.

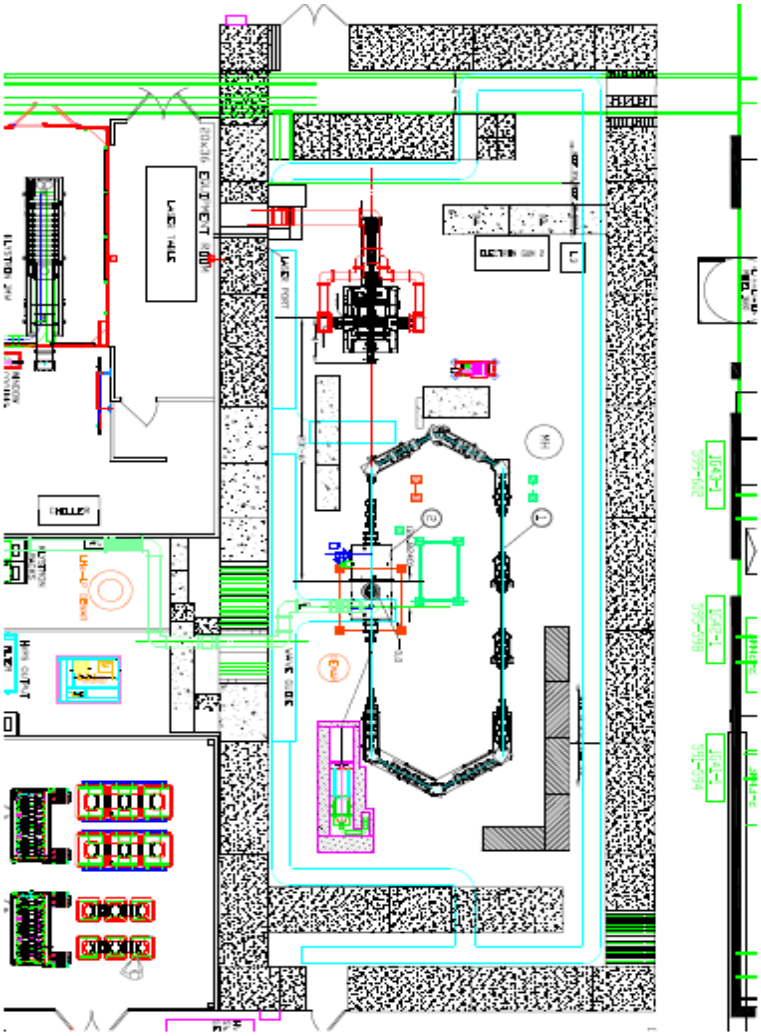

Figure I. Shielded ERL Area

All areas near the ERL shielding should be posted at least as a Radiation Area, TLD Required. Any unplanned exposure exceeding 100 mrem is a DOE reportable occurrence. This establishes an upper limit of exposure to personnel during an unexpected fault condition. Large dose rates caused by unusual operating conditions will be detected by radiation monitors (chipmunks) distributed around the area. These devices are coupled with the interlock system and will terminate the radiation in 1 to 9 seconds depending on the level of radiation at the detector. **This establishes an upper dose rate of between 40 and 360 rem/hr depending on the duration of the fault for areas that can be occupied by personnel.**

Radiation Source Terms

The four sources of radiation in the area are the RF-Gun, beam losses of the low-energy (E_k<3.5 MeV) electron beam, the five-cell cavity, and beam losses of the high-energy electron beam (E_k<25 MeV). Most of the calculations used in this note will use the source terms discussed in reference 1, which were based on formulas and figures from references sited in that note. In some cases more detailed calculations are used. The source terms used are conservative. The commissioning process will provide a check on the source terms and the effectiveness of the shielding.

The RF gun and the five-cell cavity can generate copious x-rays. No modeling has been conducted for the RF gun and the five-cell cavity in terms of the x-ray generation, but experience from other systems can be used for guidance. When these devices are commissioned, careful attention will be given to the measurement of their potential to create x-rays. The conditioning of the cavities will cause the largest x-ray generation from the cavities. The five cell cavity is expected to be able to absorb 100 to 1000 watts from electron emission before boiling too much helium and becoming normal. The voltage difference that the electrons cross will typically be less than the gradient of a single cavity, 5 MV. Only a few electrons would be accelerated across several cavities. It is assumed that **all the electrons are at 3.5 MeV with a maximum conditioning loss of 250 W**. It is expected that the **routine loss is less than 10 W** for the five cell cavities. **We will assume that the RF gun has the same limits**. The methods discussed in reference 1 can be used to estimate the 90-degree radiation, using thick target formulas. The expected dose rates for commissioning and routine operations are:

Cavity x-rays assuming 3.5 MeV

cavity	Conditioning (250W) rem/hr at 1m	Routine (10W) rem/hr at 1 m
Five-cell	2000	80
RF-gun	2000	80

The maximum kinetic energy of the x-ray gun is 3.5 MeV. It is expected that it will typically operate at a lower kinetic energy. The rule of thumb[2] for 0 degree radiation in this energy region is that it grows as the energy squared at fixed power. Therefore using 3.5 MeV represents a conservative figure.

3.5 MeV e- losses rad/(hr-kW)at 1 m

0 degrees	$4*10^4$
90 degrees	$8*10^3$

The source terms for electron losses at one meter for 25 MeV electrons are (an approximate value for 30 degrees has been added):

DRAFT

25 MeV e- losses rem/(hr-kW) at 1 m

angle	gamma	neutron
0 degrees	$8*10^5$	430
30	$8*10^4$	430
90 degrees	$8*10^3$	430

The dose rates for beam losses at 3.5 MeV and 25 MeV given above are based on high-Z thick target formulas or curves and are a conservative estimate. The radiation from actual losses can be up to a factor of 10 lower than the above estimates.

Reference 3 estimated the dose from a 25 MeV electron beam loss in the near zero degree direction to be 9000 rad/hr at 3 meters with 2 feet of heavy concrete between the source and the point of interest with a 50 kW loss. This will be used for locations where an inner shield wall (see Figure I) acts as a shadow for the 25 MeV beam losses.

The routine beam losses and maximum credible beam losses are needed to estimate the potential dose from chronic sources and for unusual conditions. The **maximum sustainable beam loss that the 5 cell cavity can support is 50 kW**, which is limited by the power supply. Many people believe that the **maximum local loss that can occur is between 10-100 W before the machine is damaged and shuts down**. The ERL will have machine protection devices to limit the losses to avoid equipment damage. However, no demonstrated mechanism to limit the beam loss has been demonstrated so a **50 kW limit is used for the 25 MeV electron beam**. The facility will have several chipmunks distributed at key locations to limit the duration of the beam faults. A 50 kW loss is probably appropriate to apply for short durations appropriate to the time required for the interlocks to stop the beam, which is typically 1-10 seconds depending on the dose rate at the chipmunk sensing the radiation. The 50 kW is considered conservative.
Routine losses are expected to be less than 10 W.

The **3.5 MeV beam has a power limit of 1 MW**. This power can be placed in the water cooled beam dump, which has local shielding. Again it is not expected that the machine can survive a large beam loss at any location, except the beam dump. The beam dump has a shielding criteria that it will represent less than a routine loss and is not considered for the penetration in this note. An **arbitrary maximum limit of 1 kW (10^{-3}) is assumed** without justification in this analysis. **A routine loss of 10 W (10^{-5}) or less is expected.** Any routine loss higher than this will be reviewed for the possible addition of local shielding.

Table I provides a summary of the source intensities used for fault conditions and routine operations. These are expected to be conservative and checked during the commissioning process.

DRAFT

Table I. Dose Rates for Routine and Maximum Losses

Condition	**Dose rate (rem/hr) at 1 meter for Max. sustainable loss**		**Dose rate (rem/hr) at 1 meter for Routine loss**	
	Gamma	Neutron	Gamma	Neutron
RF GUN	2000		80	
5-cell Cavity	2000		80	
3.5 MeV-0 deg.	$4*10^4$		$4*10^2$	
3.5 MeV-90 deg.	$8*10^3$		$8*10^1$	
25 MeV-0 deg.	$4*10^7$	$2.15*10^4$	$8*10^3$	4.3
25 MeV-30 deg.	$4*10^6$	$2.15*10^4$	$8*10^2$	4.3
25 MeV- 90 deg.	$4*10^5$	$2.15*10^4$	$8*10^1$	4.3
25 MeV-0 deg. 2ft HC at 3 meters from source	$9*10^3$		0.18	

The dose rate through a penetration is estimated by scaling the dose rate of Table I with 1/(r*r) to the entrance of the penetration and then applying an attenuation factor for the penetration. The attenuation for neutrons can be estimated using empirical formulas such as those presented in references 4 and 5. Typically the attenuation for gammas in multi-legged labyrinths is lower than neutrons, but the neutron formulas do not typically apply to gammas. For gammas, reflection coefficients are used for the surfaces of the labyrinths. This technique can also be applied for neutrons but is limited in applicability. Curves in Sullivan[4] are used for straight penetrations unless otherwise stated.

Some penetrations are shadowed by shielding. The entrance dose for the penetration has a component of radiation that arrived at the penetration by reflecting off surfaces to avoid the shadow shield. Another component of the entrance dose penetrates through the shadow shielding and then travels to the penetration. The TVLs from reference 1 and reference 8 are used[9] to calculate the attenuation of the radiation by the shield.

Laser penetration

The laser penetration is a straight hole through the shielding to allow for the transport of the laser beam to the RF gun. The penetration is 3 inches by 4 inches and is about one foot above the floor. It is located underneath the 1 MW wave guide shown in Figure 1. An enlargement of Fig I for this area is provided in Figure II. The arrows in Fig. II show potential sources for several penetrations. The 5-cell cavity is shadowed by the inner-shield wall and will not be considered as a source. Locations that represent the largest possible dose rates have been used for the analysis. The equivalent of two feet of heavy concrete will shadow the laser penetration from any radiation that could arrive directly from the potential sources. The two feet of heavy concrete provides attenuations from $1.5*10^{-2}$ to $3.2*10^{-4}$. Dose rates at the entrance to the laser port are given in the Table II below.

DRAFT

Table II: Laser port entrance Dose rates

Condition	Distance (m)	Max. dose rate (rem/hr)		Routine Dose rate (rem/hr)	
		Gamma	Neutron	gamma	Neutron
RF Gun	3.3	0.06		0.002	
3.5 MeV e	4.3	1.4		0.014	
25 MeV e-90 degree	7.3	25.5	3.9	0.005	0.0008
25 MeV e-30 degree	12	420	1.4	0.08	0.0003

The radiation can also enter the laser penetration from the side wall after one or more reflections. The details of the area are not sufficiently complete to evaluate the attenuation at this time. The design of the shielding will ensure that the exit dose rate for radiation that circumvents the shielding will be less than the dose rate for the punch through contribution.

The approximate value of the attenuation of this penetration is $5*10^{-3}$ based on figures 2.25, 2.26, and 2.27 of Sullivan. The exit dose rates are given in the table below.

Table III: Laser port exit Dose rates

Condition	Distance (m)	Max. dose rate (mrem/hr)		Routine Dose rate (mrem/hr)	
		Gamma	Neutron	gamma	Neutron
RF Gun	3.3	0.3		0.01	
3.5 MeV e	4.3	1.2		0.01	
25 MeV e-90 degree	7.3	128	20	0.03	0.004
25 MeV e-30 degree	12	2100	1.4	0.4	0.001

There are several comments that are worth noting. The highest gamma dose rate does not come from the same location as the highest neutron dose. These cannot be added since this would represent to beam losses at twice the maximum. Since one is looking for order of magnitude estimates it is not important to add these for a fault condition and the error will be smaller than the accuracy of the calculation. The routine dose rates are small and will not be presented throughout this note. The maximum dose rates can be scaled using Table I to obtain the routine/chronic dose rates. The chronic rates assume that the entire routine beam loss occurs at the worst possible location for the penetration being considered, which is an over estimate.

DRAFT

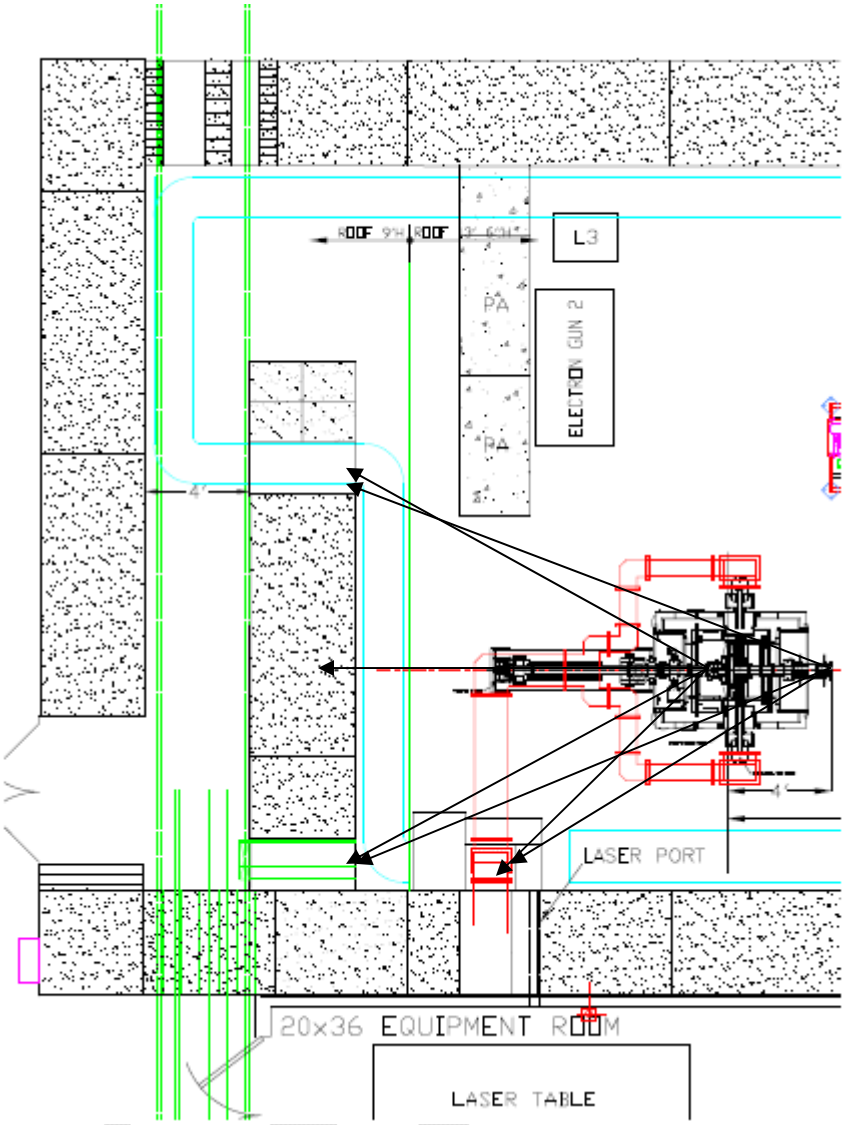

Figure II. Plan view of South section of ERL Area

I MW Waveguide Penetration

The penetration for the 1 MW waveguide is a two legged labyrinth. An elevation view is shown in Figure III. The cross sectional area of the first (second) leg is 2ftx2ft (1ftx2ft). The length of the first (second) leg is 2.9 ft (4 ft). The radiation has two pathways to get to the exit of the port.

Two-feet thick heavy concrete shadows the opening in the main concrete shield wall from the x-ray and neutron sources. The gamma radiation can penetrate the heavy concrete and shine into the second leg. The attenuation factors are the same as those used for the laser penetration. The distance to the source will be assumed to be the same as the laser port at lower elevation, which means the entrance dose rates for radiation "punching-through" the heavy concrete is the same as the laser port. An attenuation factor of 0.1 for the hole in the shielding is used from reference 4.

The exit dose rates for radiation punching through the heavy concrete are given in the Table IV below:

Table IV: 1 MW Waveguide Exit Dose Rates for punch-through

Condition	**Distance (m)**	**Max. dose rate (mrem/hr)**		**Routine Dose rate (rem/hr)**	
		Gamma	Neutron	gamma	Neutron
RF Gun	3.3	6		0.2	
3.5 MeV e	4.3	140		1.4	
25 MeV e-90 degree	7.3	2550	390	0.5	0.08
25 MeV e-30 degree	12	42,000	140	8	0.03

The contribution for the dose for neutrons propagating through the two-legged labyrinth can be estimated using the attenuation formulation of Goebel[5]. An approximate attenuation of $1.0*10^{-3}$ is obtained for the neutrons. The gamma attenuation is estimated using the reflection coefficients. An area for the first scatter of 20 ft^2 is used with a reflection coefficient of $3*10^{-3}$ and a distance of 5 feet. An area of $4ft^2$ is used for the second scatter along with a distance of 5 feet and a reflection coefficient of $3*10^{-2}$. A net attenuation of $1.2*10^{-5}$ is obtained for the gammas.

Table V: 1 MW Waveguide Exit Dose Rates –as Labyrinth

Condition	**Distance (m)**	**Max. dose rate (mrem/hr)**		**Routine Dose rate (mrem/hr)**	
		Gamma	Neutron	gamma	Neutron
RF Gun	3.3	2			
3.5 MeV e	4.3	5		0.05	
25 MeV e-90 degree	7.3	90	400	0.02	0.08
25 MeV e-30 degree	12	330	149	0.07	0.03

DRAFT

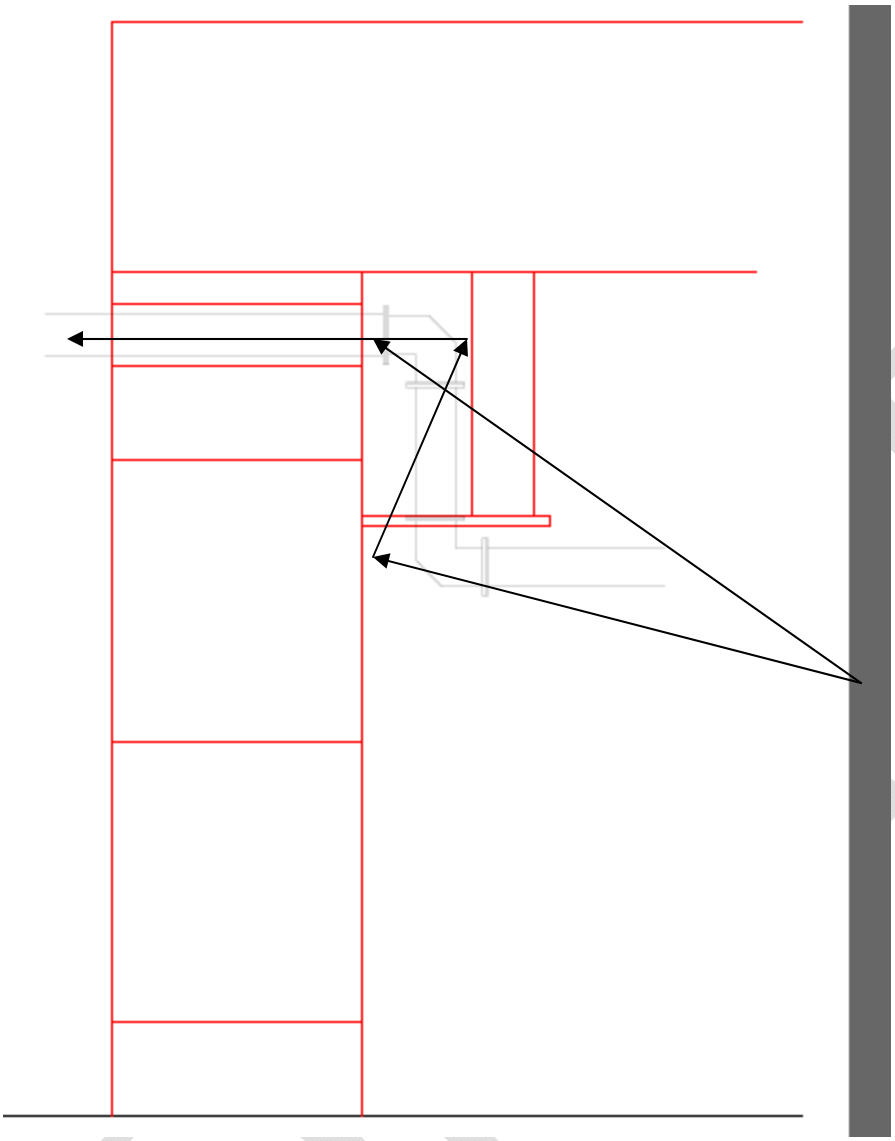

Figure III. 1 Megawatt Waveguide Penetration

Cryo Ports

Five 1ft by 1 ft penetrations exist at the top of the back wall for cryogenics. These ports are straight penetrations. The present plan is to close several of the port with packing block. They will be available in the future for use as utility ports if necessary. One port already has vacuum jacketed cryogenics piping in it. This pipe extends nearly to the adjacent building. Another port will be used for a vent, which will have an elbow immediately outside the shield wall. One port may be used for a few utility pipes and will be packed with shielding. Table VI shows the dose rates at exit of the ports assuming no packing, no shadow shields, and no credit for the shielding provided by the pipes:

Table VI: Cryo Ports Exit Dose Rates

Condition	**Distance (m)**	**Max. dose rate (mrem/hr)**		**Routine Dose rate (mrem/hr)**	
		Gamma	Neutron	gamma	Neutron
RF Gun	6.2	21,000 (470)		840 (19)	
5-cell cavity	6.2	21,000 (470)		840 (19)	
3.5 MeV e	6.2	84,000 (1900)		840 (19)	
25 MeV e-90 degree	3.2	3,800,000 (84,000)	200,000 (4400)	760 (17)	40 (0.9)
25 MeV e-30 degree	5.3	2,800,000 (63,000)	73,000 (160)	560 (12)	15 (0.3)

The worst cases were used for the estimates. The area between the shield wall and the EEBA building is intended to be a fenced area to keep personnel away from these ports. The edge of the building is seven feet away. If we assume the radiation exiting the hole is uniformly diffused over a cone of half-angle of 45 degrees then the radiation levels in the adjacent building will be a factor of 45 lower. **The numbers in parenthesis are the dose rates in the adjacent building** directly across from the port at a height of 12.5 feet.

The ports shall be modified to reduce the fault dose rates by a factor of at least 10. For a port using a steel shielding plate this requires 4 inches (10cm) of steel. For ports that are made smaller the area should be at least a factor of 9 smaller to reduce the radiation more than a factor of 10.

North Personnel Labyrinth

There are several aspects of this area that need to be considered. Figure IV shows a detail of the north labyrinth area. The north-west corner of the labyrinth has a buss block with penetrations to the outside. There is a cable port that acts as a short cut to the labyrinth about 10 feet from the gate. In addition the radiation that penetrates through the inner concrete wall then can enter the labyrinth close to the gate. In the final design the dump shielding shadows the gate entrance from the ring losses. Presently there is a two-foot thick iron shield in that location. Finally, the labyrinth can be treated as a four-legged labyrinth.

Direct radiation is shadowed from striking the buss block area. The near zero degree gamma radiation can arrive at the buss block area with two reflections. Using reflection coefficients the gamma dose would be expected to be reduced about $3*10^{-5}$ from that of the source at a meter. Using the penetration curves from Sullivan one would expect a reduction of another $3*10^{-3}$ for the radiation exiting the port. This gives a net reduction of 10^{-7}. **A beam loss of 50 kW at 25 MeV produces a gamma dose rate of 4 rem/hr**. The routine dose rate is expected to be less than 1 mrem/hr. This is not expected to be an issue. A chipmunk should limit the losses well below 50 kW anywhere in the 25 MeV ring and if desired the area outside the buss block can be part of the exclusion area needed for the cryogenics penetrations that have been discussed earlier. **The neutron dose rate exiting the buss blocks is estimated to be 100 mrem/hr for a 50 kW beam loss close to the labyrinth opening**.

DRAFT

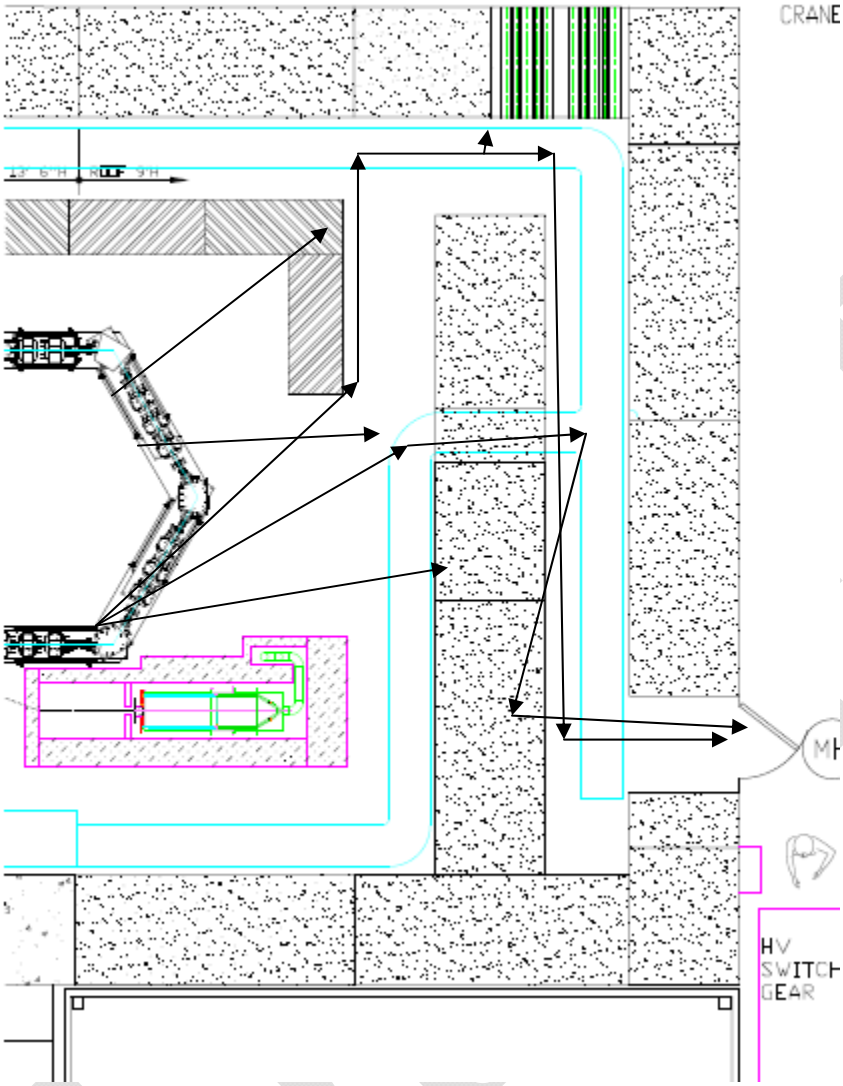

Figure IV. The Area of the North Personnel labyrinth

The radiation can also get to the ports in the buss block by penetrating the inner two-foot thick iron shield wall. The shield wall will provide an attenuation of $3*10^{-6}$ for forward gammas, ignoring the additional reduction due to the angle through the shield. The gamma dose is negligible when the port attenuation is taken into account. The reduction for neutrons, Ignoring the angle through the steel, is $9.3*10^{-3}$. **The neutron-dose rate exiting the port would be 25 mrem/hr from this contribution**. In reality, the additional distance through the steel would reduce the neutrons another factor of ten.

The north labyrinth can be treated as a four-legged labyrinth using the formulation of reference 5 to obtain the dose rate for neutrons at the gate. The attenuation for neutrons is 10^{-5}. The neutron entrance dose rate into the labyrinth is 75 rem/hr when a 50 kW beam loss occurs near the entrance. The **exit neutron dose rate at the gate is less than 1 mrem/hr for the 50 kW loss**. The routine loss is negligible.

The gamma and x-rays traveling through the labyrinth require at least 5 bounces to get to the exit gate. The maximum reflection coefficient[6] for 0.2 to 10 MeV gammas is .04. Using this fixed value for 5 bounces an attenuation of 10^{-7} is obtained without taking credit for the reduction due to distance. The zero degree gamma dose is very peaked in the forward direction. A crude estimate of $8.2*10^5$ rad/hr is used for the entrance dose averaged over the opening of the labyrinth. **The 50 kW beam loss produces an exit gamma dose of 80 mrem/hr at the gate.**

The zero-degree radiation can penetrate the shield wall to the west of the gate. The radiation would require two bounces to get to the gate. The peak dose rate penetrating the 4 feet of light concrete has about 1350 rad/hour for gammas 50 cm off axis of the zero beam[7]. Using an effective area of 28 ft^2 and the reflection coefficients a **gamma dose rate at the gate of 28 mrem/hr is obtained for a 25 MeV beam loss of 50kW.**

The neutrons penetrating the inner shield wall can be calculated using TVLs. A neutron dose rate of 2.7 rem/hr would exist at the light concrete wall. The transport to the gate can be estimated as a two legged labyrinth with an attenuation of $2*10^{-2}$. An additional factor for the source size to the width of the isle, about a factor of four, should be incorporated. This results in a **potential neutron dose rate at the gate of 250 mrem/hr neutrons for a 50 kW beam loss.**

Cable tray that penetrates the wall about 8 feet from the gate will allow neutrons and gammas to get to the gate without going through or around the inner shield. The dose is calculated at the exit the cable port and then transported using the two-legged labyrinth formula for neutrons and 2 bounces for gammas. **The dose rates at the gate are 1.8 rem/hr neutrons and 260 mrem/hr gamma for a 50 kW beam loss.**

The various paths of radiation for the same loss location to the gate are additive. The contribution of the cable tray penetration through the inner shield wall contributes the largest portion of the dose.

South Personnel Labyrinth

The south personnel and equipment labyrinth has pathways for radiation to reach the gate as well as penetrations from locations in the labyrinth to the outside. These will be examined similar to the north personnel labyrinth.

The labyrinth can be viewed as a four legged labyrinth. For neutrons the attenuation of the labyrinth is $3*10^{-5}$. The closest neutron source from a scraping loss produces a neutron-entrance dose of 342 rem. **The expected neutron-exit dose is 10 mrem/hr for a 50 kW beam loss.**

Photons can strike the shielding wall and then be reflected into the labyrinth. It takes a minimum or four bounces for the photons to reach the gates. The photon reduction is of the order of 10^{-8} and even for a 50 kW beam loss the dose rates at the gate are well less than 1 mrem/hr. The maximum loss of the 3.5 MeV beam would create a few micro-rem/hr at the gate.

DRAFT

Photons and neutrons can punch through the wall behind L3 and reduce the effectiveness of the labyrinth. Using the results of reference 2 the photon dose at the light concrete is 336 rem/hr for a 50 kW beam loss. Two bounces are required to get the photons to the gate. The **photon dose rate at the gate is estimated to be 200 mrem/hr for a 50 kW beam loss.**

For neutrons the shield wall behind L3 was treated as heavy concrete with an attenuation factor of 45gm/cm^2. The neutron dose rate at the light concrete wall is 6 rem/hr. Using a labyrinth formula this will produce a few mrem/hr of neutrons at the gate for a 50kW beam loss.

Photons can travel over the shield wall near L3 and strike the roof transition. With two reflections the photons can be at the light concrete wall. The estimated dose rate via this path is **235 rem/hr at the light concrete wall**. This is similar to the number reached above and is additive. The cable tray can allow some neutrons to get to the light concrete with only one bounce. The estimated dose rate is 70 rem/hr at the light concrete wall. These contribute to the **photon-dose rate at the gate for a total of 400 mrem/hr.**

Neutrons can take a similar path and are expected to produce a few tens of mrem/hr at the gate.

Both neutrons and gammas rays can penetrate the concrete wall opposite the gate and then shine on the gate. The Table VII below lists the results of the dose rate estimates:

Table VII: Radiation Penetrating the Shield Wall Opposite the Gate

source	Dose rate mrem/hr Fault (routine)
RF-gun	1.8
Gamma-3.5 MeV e	4.5 (0.5)
Gamma-25 MeV e; 90 degree	1,900 (0.4)
Gamma-25 MeV e; 30 degree	49,000 (10)
Neutron-25 MeV e	160 (0.03)

A shield block could be placed in the center of the e-ring to shadow this wall from the forward angle radiation and substantially reduce the potential dose. Since the results are conservative, it might be desired to wait for commissions and see if this area is an issue for operations.

The cable port opposite the gate is approximately 7 inches by 24 inches. It is shadowed with 24 inches of heavy concrete used to form the labyrinth for the 1 MW waveguide. The TVLs for the various particles and energies were used to reduce the radiation at the port entrance. An attenuation factor of 0.1 was used for the penetration. The dose rates at the gate are substantially smaller than the dose rate at the exit of the penetration. A factor of 0.1 was used and expected to be conservative. The ratio of the gate area to the cable port area is more than a factor of 50. The estimated dose rates at the gate are given in Table VIII below:

DRAFT

Table VIII: Radiation at the Gate from Nearby Cable Port

source	Dose rate mrem/hr Fault (routine)
RF-gun	0.4
Gamma-3.5 MeV e	0.9 (0.01)
Gamma-25 MeV e; 90 degree	960 (0.2)
Gamma-25 MeV e; 30 degree	2400 (0.5)
Neutron-25 MeV e	33 (0.007)

The cable port 10 feet from the gate is shadowed from all sources except the RF-gun and perhaps the 3.5 MeV electron losses near the RF-gun. X-rays of the level 34 rem/hr and 135 rem/hr can exit the cable port for the RF-gun and electron beam losses respectively. After two reflections these can contribute 1.6 mrem/hr (RF-gun) and 2.3 mrem/hr (3.5 MeV beam loss).

The south labyrinth has several penetrations that allow radiation to escape the shielding. There are two cable way penetrations on the west end of the labyrinth (see Fig. II). The larger hole is 11 inches by 17 inches and the smaller is 6 inches by 12 inches. Dose rate estimates for photons near the adjacent light concrete wall was previously estimated to total 600 rem/hr for a 50 kW beam loss at 25 MeV. An area of the wall (approx. 1ft by 8 ft) can shine out the hole with one bounce off the concrete wall. This would give an estimated 5 rem/hr at the exit of the hole. The 600 rem/hr also shines on the opening of the hole and will produce approximately 60 rem/hr at the exit. The numbers will be smaller for the other port. **A combination of access controls and shadow shielding are required to reduce the levels to acceptable levels**.

The photons can bounce into the trench and exit the shield wall on the west side. The 600 rem/hr would produce 6 rem/hr outside the shielding wall. **It is recommended that the trench be blocked as much as possible to reduce this dose.**

The photons can also bounce off the light concrete wall and exit the trench on the east side or through the buss block on the east side. The trench is estimated to have a photon dose rate of 2 rem/hr. The buss block holes would have a lower dose rate. **Again it is recommended that the trench be blocked as much as possible.**

ODH Port on the Roof

The roof over the beam dump and ring has a ventilation port. This port represents a large opening with dimensions of 2 feet by 4 feet. The port is constructed as a 3-legged labyrinth with a block shadowing the initial opening. The ODH port labyrinth is shown in Figure V.

The dose rate exiting the penetration should be compared to what is expected to penetrate directly through the four feet thick light concrete roof. Using the TVLs for light concrete we expect:

DRAFT

Table IX: Radiation Through 4 foot light concrete Roof

source	**Dose rate through roof at max. fault condition (mrem/hr)**
3.5 MeV RF Gun or Five-cell cavity	5
3.5 MeV e beam-photons	22
25 MeV e beam-photons	18,000
25 MeV e beam-neutrons	1,000

The neutron and gamma radiation can penetrate the 4 foot light concrete and then shine to the end of the labyrinth. These dose rates are lower than the adjacent roof since the shielding is the same thickness but the distance is greater and therefore is less than the adjacent roof given in Table IX.

The area under the air handling unit has a shielding path that is about 80 gm/cm^2 thinner. This would make the radiation levels 10 times higher than the adjacent roof if the extra distance is ignored. The dose rates would be of the order of **10 rem/hr neutron and 180 rem/hr gamma**. This area is blocked by the air handling unit.

For neutrons the port can be treated as a three-legged labyrinth. The attenuation is approximately 10^{-3}. The **neutron dose rate for a 50 kW beam loss is 4 rem/hr**.

It requires a minimum of three bounces for gamma rays to exit the ODH port. Similar to above a fixed reflection coefficient of 0.04 for each bounce will be used. Ignoring distances and areas a **gamma dose rate of 10 rem/hr** is estimated.

Holes on Roof Created by Lifting Fixtures

There are four holes on the roof formed by the roof elevation transition and the lifting fixture for the roof beams. These holes are 4 feet long and are approximately 0.4 ft^2 in area. Personnel are excluded from the roof when the sources or machine operating.

Using the figures in Sullivan (figures 2.24-2.27) an attenuation of $5*10^{-2}$ will be used for both neutrons and photons. The exit will be blocked with the equivalent of 1 foot of light concrete.

DRAFT

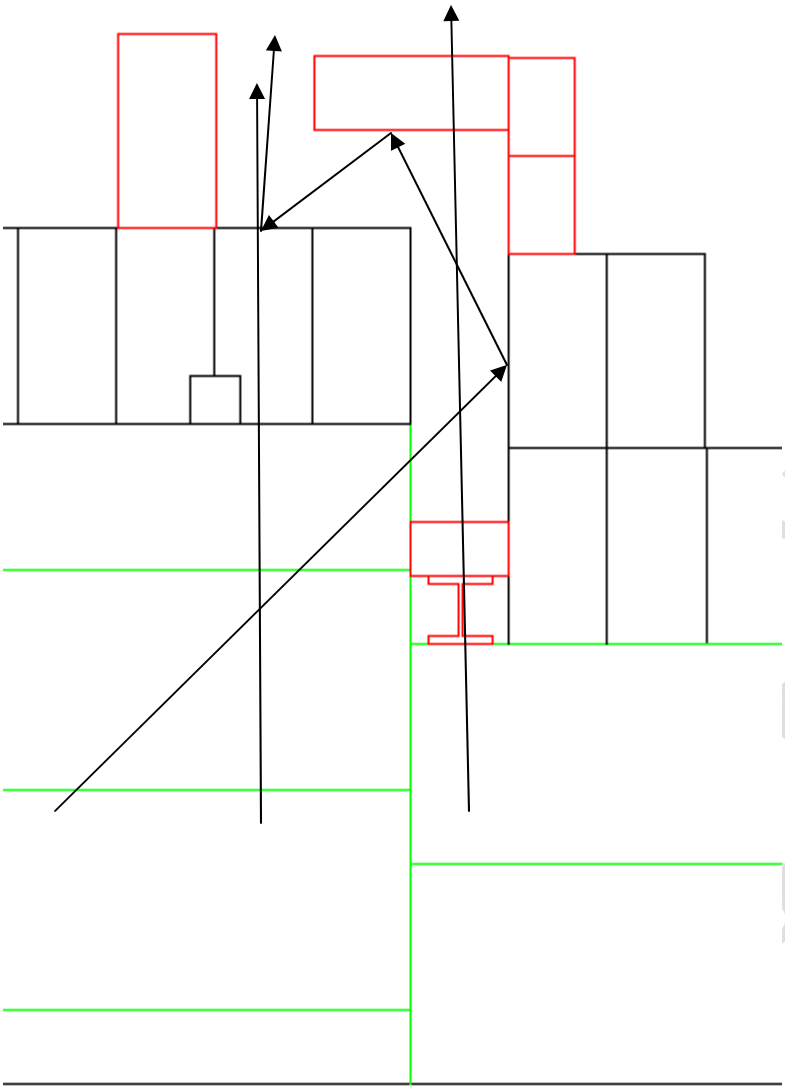

Figure V. Elevation View of ODH Port

This provides a reduction of 0.068 for low energy gammas and a reduction of 0.13 for high energy gammas and neutrons. The following results were obtained for worst case examples for the various sources and the holes:

Table X: Dose Rates at lifting Fixture Holes

Source	***Dose rate mrem/hr***	***Loss***
RF gun	520 (1)	2000 rad/hr at 1 m
3.5 MeV e	1,100 (2)	1 kW
25 MeV e; neutrons	3,800 (8)	50 kW
25 MeV e; gammas at 30 deg.	700,000 (1,400)	50 kW

The edge of the shield wall is at least eight feet away. The number in parenthesis is the expected dose rate at the shielding edge assuming that the radiation is uniformly distributed in a cone with a 45 degree opening half-angle.

Summary

Table XI provides a summary of the worst dose rates at each area for the gamma rays and neutrons. The maximum neutrons can come from a different source location than the gamma rays. In all cases, the maximum gamma dose rates are from the 25 MeV electron beam losses.

XI: Maximum Penetration Dose Rates

penetration	**Max. Gamma Dose rate (mrem/hr)**	**Max. neutron Dose Rate (mrem/hr)**
Laser port	2,100	20
1 MW Waveguide	42,000	400
Cryo Ports (5)	8,400 [1]	2000 [1]
North Gate	260	1800
North Labyrinth Buss Block	4,000 [2]	100
South Gate	49,000 [3]	160
Port in South Labyrinth (2)	60,000 [4]	600 [5]
West Trench	6,000	100 [5]
East Trench	2,000	1,600 [5]
South labyrinth buss block	100	300 [5]
ODH Vent	10,000 [6]	4,000 [6]
Lifting Fixture holes (4)	1,400 [7]	8 [7]
50 kW waveguide	28,000 [8]	1,000 [8]

Comments:

[1] Assumes that steel has been used to reduce the gamma rays by a factor of 10.
[2] This is directly outside the buss block. This may be in a fenced area.
[3] A shield block in the ring center would substantially reduce this number, if desired.
[4] At port exit which may be in a fenced area. Port may be packed in the future. This value is for the port with the highest dose rate of the two ports.
[5] Not presented in text.
[6] This is on the roof and is not allowed to have personnel.
[7] Evaluated at the edge of the shielding and not on the roof.
[8] The penetrations for the cables ports, water pipes and the 50 kW waveguide are presented in another note (see reference 10). The dose rates presented here are at a height of 12 feet above the floor.

All the dose rates in Table XI are sufficiently low that with appropriately placed radiation monitors to terminate the beam on large beam losses the exposure to personnel will be less than 100 mrem in a fault. Several of the larger dose rates can be reduced and some suggestions have been made in the text. Many of the large dose rate estimates are most likely very conservative and not expected to occur. The initial commissioning process at low currents will provide a check of the estimates.

DRAFT

The initial commissioning of the RF gun and five-cell cavity will provide an opportunity to examine the penetrations for x-rays at a much reduced level. One or two chipmunks are planned to be placed inside the shielded area to verify the source terms for the RF gun and five-cell cavity. The proposed test to run low intensity 25 MeV electrons into a flange at the north side before the ring is operational will also provide an early check on the shielding and penetrations.

There have been several suggested or assumptions to the shielding in this note. Table XII lists some of them for consideration:

XII: Suggestions for Penetrations

Area	**suggestion**
I MW Penetration	Check shielding meets assumptions
Laser penetration	Check shield meets assumptions
Cryo ports	Check shielding is added
Outside adjacent area to shielding	Define as radiation area
West side of shielding	Fence and lock when machine operational
South labyrinth penetrations on west side	Consider enclosing in locked area and adding shielding
Roof	Examine Roof access is properly prevented
Trench under shielding	Add some shielding to reduce dose rate and prevent access
South Gate	Consider block in center of ring to block forward radiation
Chipmunks-radiation monitors	Consider chipmunk locations to terminate large losses

References

1) D. Beavis," Simple Estimates of ERL radiation", August 9, 2008.
2) W.P. Swanson, Radiological Safety Aspects of the Operation of Electron Linear Accelerators, Technical Report Series No. 188, IAEA, Vienna, 1979.
3) D. Beavis, "The effectiveness of a two-foot Thick Inner Concrete Wall", Dec. 11, 2006. See figure 1 of the note.
4) A.H. Sullivan, A guide to radiation Protection and Radioactivity Levels Near High Energy Particle Accelerators, Nuclear technology Publishing, 1992. See figures 2.25, 2.26, and 2.27.
5) K. Goebel et. al., "Evaluating Dose Rates Due to neutron leakage Through the Access Tunnels of the SPS", CERN LABII-RA Note/75-10(1975).
6) NCRP Report No. 144, Radiation protection for Particle Accelerator Facilities, NCRP 2003. See figure 4.12
7) See reference 3 and the figure for the MCNPX calculation.
8) P.K. Job and W.R. Casey," Preliminary Radiological Considerations for the Design and Operation of NSLS II Storage Ring and Booster Synchrotron", NSLS II Technical Note No. 13, July 25, 06.

DRAFT

9) The attenuation lengths for ion and heavy concrete given in reference 8 have been converted to TVLs.
10) D. Beavis, "Estimate of the Radiation Exiting Penetrations for the ERL 50 kW Waveguide, Cable Buss Block, and Water Pipes", Dec. 6, 2006.

DRAFT

APPENDIX 2

ODH Calculations

Collider-Accelerator Department

BROOKHAVEN NATIONAL LABORATORY

Building 911-A
P.O. Box 5000
Upton, NY 11973-5000
Phone 631 344-5272
Fax 631 344-5676
rck@bnl.gov

managed by Brookhaven Science Associates
for the U.S. Department of Energy

Memo

Date: January 8, 2008

To: E. Lessard

From: R. C. Karol

Subject: ERL ODH Calculations

Purpose

To compute the appropriate ODH class for the ERL Cave in B912 and the ERL helium recovery building located just north of B912. Oxygen deficiency can be caused by a leak of cold helium or nitrogen fluid present in these buildings.

Summary and Conclusions

The goal of this calculation was to determine the Oxygen Deficiency Hazard (ODH) risk for the ERL Cave in B912 and the ERL helium recovery building located just north of B912 by computing the fatality rate for a major cryogenic fluid release. A spectrum of events may cause an oxygen deficiency. A major cryogenic system failure has been chosen to bound the consequences of all credible failures in the ERL Cave and the ERL helium recovery building as shown below. Spill rates are assumed to remain constant throughout the release. In addition, a catastrophic failure of a 500L cryogenic Dewar in the ERL Cave was examined.

Building	Free Volume	Bounding Cryogenic Leak Location	Spill Rate (SCFM) [Reference 1]	ODH Exhaust Fan Capacity (SCFM)
ERL Cave in B912	20,000 ft^3	Failure of 1-inch copper LN2 transfer line	3275	12,000
ERL Helium Recovery Building	9500 ft^3	Rupture of Kinney vacuum pump helium discharge line	1150	2000

It is concluded that the ERL Cave and the ERL helium recovery building be classified as ODH 0 areas.

Applicable Criteria

The method and criteria in the BNL ODH Subject Area [2] was used to determine the ODH class for each ERL building.

ODH Model Description

The Fermi Model is a prescribed method to determine the necessary level of hazard control for a building having the potential for oxygen deficiency. The fatality rate in the model is the product of two numbers. One quantity is the probability per hour of an event causing an oxygen deficiency. The other quantity is found by estimating the minimum oxygen concentration during the transient, assuming instantaneous mixing of the air and inert gas in the building volume, and is represented by a factor between 0 and 1 (see Figure 1). The computed fatality rate is then used to define the ODH class necessary to protect personnel.

The Oxygen Deficiency Hazard fatality rate is defined as:

$$\Phi = PF$$

where Φ = the ODH fatality rate per hour
P = the expected rate of the event per hour, i.e. initiator frequency
F = the fatality factor for the event (Figure 1)

The value of P, the initiator frequency, is determined by using actual equipment failure rate data taken from the BNL SBMS subject area.

DRAFT

Figure 1. Graph of the Fatality Factor (logarithmic scale) versus the Computed Oxygen Partial Pressure.

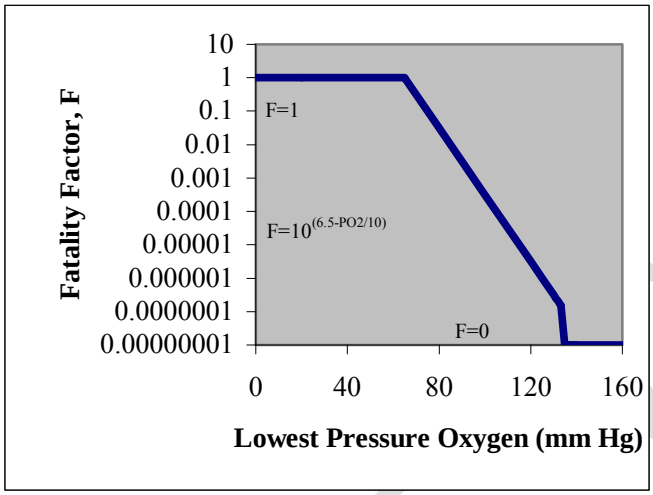

The value of the fatality factor, F, is the probability that a fatality will result if the inert gas release occurs. Figure 1 from the SBMS defines the relationship between the value of F and the computed oxygen partial pressure. The partial pressure is found by multiplying the mole fraction of oxygen in the building atmosphere by 760 mmHg. If the oxygen concentration is greater than 18% (~137 mmHg), then the value of F is defined to be zero. That is, all exposures above 18% are defined to be safe and do not contribute to fatality. If the oxygen concentration is 18%, then the value of F is defined to be 10^{-7}. At decreasing concentrations the value of F increases until, at some point, the probability of fatality becomes unity. That point is defined to be 8.8% (~67 mmHg) oxygen in the Fermi model, the concentration at which one minute of consciousness is expected.

The value of Φ, the fatality rate, is then used to determine the ODH class of the building as follows:

ODH Class	Fatality Rate (per hour)
NA	$<10^{-9}$
0	$\geq 10^{-9}$ but $<10^{-7}$
1	$\geq 10^{-7}$ but $<10^{-5}$
2	$\geq 10^{-5}$ but $<10^{-3}$
3	$\geq 10^{-3}$ but $<10^{-1}$
4	$\geq 10^{-1}$

The oxygen concentration in the building during a release of a gas is approximated by solving the following differential equations:

(a) If the exhaust fan is on and the spill rate of inert gas (R) is less than the exhaust fan capacity (Q):

$$V\frac{dC}{dt} = 0.21\,(Q - R) - QC$$

DRAFT

Where

V = building volume (ft^3)
C = oxygen concentration (mole fraction)
t = time (minutes)
Q = exhaust fan(s) flow rate (CFM)
R = inert gas spill rate into building (CFM)

Solving results in the following equation:

$$C(t) = 0.21\ [1 - R/Q(1-\exp(-Qt/R)]$$

(b) If the exhaust fan is off or if the inert gas spill rate (R) is greater than the exhaust fan capacity (Q):

$$V\frac{dC}{dt} = -RC$$

Solving results in the following equation:

$$C(t) = 0.21\ \exp(-Rt/V)$$

Assumptions

1. Building volumes were measured with appropriate corrections made for determining the free volume.

2. The ERL Cave exhaust fan starts 30 seconds after the cave oxygen concentration sensors fall to 18% and has a capacity of 12,000 CFM. Since the exhaust flow rate exceeds the gas spill rate, as soon as the fan starts, the oxygen concentration in the cave rises.

3. The ERL helium recovery building currently has no exhaust fan but has oxygen sensors which alarm at 18% oxygen concentration. An alternative is examined with an exhaust fan capacity of 2000 CFM. The fan is assumed to start 30 seconds after the oxygen sensor trips at 18%. Since the exhaust flow rate exceeds the gas spill rate, as soon as the fan starts, the oxygen concentration in the helium recovery building rises.

4. The helium and nitrogen spill rates, assumed to remain constant, were obtained from Reference 1.

5. Outside air drawn into the ERL Cave has a 21% oxygen concentration.

6. As per the SBMS model, the oxygen concentration in the building is found by assuming instantaneous mixing of the air and cryogenic gas in the building volume.

DRAFT

Detailed Calculation and Analyses

ERL Cave ODH Calculation:

In order to simplify the calculation for the ERL Cave by avoiding a detailed analysis of the cryogenic system failure rates, the following was done:

1) Using the worst case cryogenic fluid spill rate [1], the time for the cave oxygen concentration to fall from 21% to 18% was determined using:

$$t = -\ln (0.18/0.21)\ V/R$$

where:
V = the ERL cave free volume, 20,000 ft^3
R = the maximum spill rate of nitrogen into the ERL cave, 3275 CFM

This results in a time of 0.94 minutes.

2) Assuming that it takes 30 seconds from the time of oxygen sensor trip until the ODH exhaust fan is at full capacity, the fan will be exhausting 1.44 minutes after spill initiation.

3) With t = 1.44 minutes, the oxygen concentration drops to a 16.6% just as the exhaust fan reaches full capacity of 12,000 CFM. The oxygen concentration then rises when fresh air is drawn into the cave as the exhaust fan operates.

4) Using this minimum oxygen concentration results in a partial pressure of 126 mmHg and a Fatality Factor, F, of 7.8×10^{-7}.

5) Next the initiator frequency, P, which results in a Fatality Rate, Φ of $<10^{-7}$ is found. A Fatality Rate of $<10^{-7}$ corresponds to an ODH 0 classification.

$$P = \Phi/F$$

Solving yields an allowable initiator frequency of P = 0.128 per hr to maintain an ODH 0 classification. This means that this major LN2 leak into the ERL cave, other pressure boundary failures with lower spill rates and human error resulting in a release of inert gas in the ERL cave could occur every 7.8 hours and still allow the cave to be classified as an ODH 0 area.

6) This initiator frequency is obviously unrealistically high compared to a credible frequency. Thus, controlling the ERL Cave as an ODH 0 area is acceptable and appropriate.

DRAFT

Finally, a catastrophic failure of a 500L He Dewar in the ERL Cave is examined to verify that ODH 0 is appropriate for this failure. The expansion ratio for helium from liquid helium at atmospheric pressure to room temperature helium gas at 70F is 754 [3]. Thus the released helium is 13,312 ft^3. Assuming perfect mixing of this release into the 20,000 ft^3 cave volume and ignoring any beneficial effects of the ODH exhaust fan, results in an oxygen concentration of 10.8%. The fatality factor at 10.8% oxygen is 1.96×10^{-2}. The probability of a Dewar rupture is 10^{-6} per hour [2], thus the Fatality Rate is 1.96×10^{-8} per hour. This is $<10^{-7}$ per hour so the designation of ODH 0 for the cave remains acceptable.

<u>ERL Helium Recovery Building ODH Calculation:</u>

The ERL helium recovery building ODH classification is first examined by finding the time for the oxygen concentration to fall to a level that would cause the room to exceed an ODH 0 classification without any ODH exhaust fan. It is conservatively assumed that the initiating frequency for this event is once a year or 1.14×10^{-4} per hour. The assumed failure rate is very conservative since SBMS lists pipe-section rupture frequencies as ranging from 10^{-8} to 10^{-10} per hour. The once per year failure rate accounts for a burn-in period when ERL is first started up and prevents having to do a detailed failure rate study of the systems in the helium recover building.

1) Using the worst case cryogenic fluid spill rate [1], the time for the helium recovery building oxygen concentration to fall from 21% to 18% was determined using:

$$t = -\ln (0.18/0.21)\ V/R$$

Where:
V = the ERL helium recovery building volume, 9500 ft^3
R = the maximum spill rate of helium into the ERL recovery building, 1150 CFM

This results in a time of 1.3 minutes.

2) Conservatively assuming that the initiator frequency, $P = 1.14 \times 10^{-4}$ per hour means that F must equal 8.77×10^{-4} to have an ODH 1 classification.

3) If $F = 8.77 \times 10^{-4}$, then the corresponding oxygen concentration is found using:

$$F = 10^{(6.5-PO2/10)}$$
$$C = PO2/760\ (100)\ \%\ \text{oxygen}$$

Solving yields PO2 = 95.6 mmHg and C = 12.6% oxygen.

4) The time from the start of the accident to reach 12.6% oxygen is found to be 4.2 minutes.

DRAFT

5) Thus with the restraint to maintain the room posted as ODH 0, there is only 2.9 minutes to evacuate the building after the ODH alarm sounds. This may be insufficient time to evacuate. The building has 2 doors and a footprint of 41' x 24' with three large equipment skids in the room.

As an alternative, an ODH exhaust fan having a capacity of 2000 CFM is assumed. This alternative is necessary because the above scenario results in a low oxygen concentration and depends on a fairly rapid response time for the building occupants to escape.

1) From step 1 above it takes 1.3 minutes to trip the oxygen senor when the oxygen concentration falls to 18%.

2) Assuming that it takes 30 seconds from the time of oxygen sensor trip until the ODH exhaust fan is at full capacity, the fan will be exhausting 1.8 minutes after spill initiation.

3) With t = 1.8 minutes, the oxygen concentration drops to a 16.9% just as the exhaust fan reaches full capacity of 2,000 CFM. The oxygen concentration then rises when fresh air is drawn into the cave as the exhaust fan operates.

4) Using this minimum oxygen concentration results in a partial pressure of 128.4 mmHg and a Fatality Factor, F, of 4.57×10^{-7}.

5) Next the initiator frequency, P, which results in a Fatality Rate, Φ of $<10^{-7}$ is found. A fatality Rate of $<10^{-7}$ corresponds to an ODH 0 classification.

$$P = \Phi/F$$

6) Solving yields an allowable initiator frequency of P = 0.219 per hr to maintain an ODH 0 classification. This means that this major helium leak into the ERL helium recovery building, other pressure boundary failures with lower spill rates and human error resulting in a release of inert gas in the helium recovery building could occur every 4.6 hours and still allow the building to be classified as an ODH 0 area.

7) This initiator frequency is obviously unrealistically high compared to a credible frequency. Thus, controlling the ERL helium recovery building as an ODH 0 area is acceptable and appropriate.

This calculation was checked by Peter Cirnigliaro.

References

1. Email from Y. Than to R. Karol dated 1/8/08, ERL ODH Data

DRAFT

2. BNL Standards Based Management System Subject Area, ODH Classification/Controls
3. R.F. Barron, *Cryogenic Systems*, 2nd Edition, 1985, Oxford University Press, NY. Appendices B and D.

DRAFT

APPENDIX 3

C-AD Shielding Policy

From the C-AD SAD:

C-AD SAD Appendix 3 C-AD SAD Revision 2 8/2/04

Collider-Accelerator Department Shielding Policy

The main features of the shielding policy for C-AD facilities are currently delineated in the Collider-Accelerator Department Operations Procedure Manual.[1, 2] The principal components of this policy are reviewed here for completeness. The primary purpose of the shielding policy is to assure that all radiation related requirements and administrative control levels are satisfied. Specifically, the Collider-Accelerator Department's Radiation Safety Committee reviews facility-shielding configurations to assure:

1. Annual site-boundary dose equivalent is less than 5 mrem.
2. Annual on-site dose equivalent to inadvertently exposed people in non-Collider-Accelerator Department facilities is less than 25 mrem.
3. Maximum dose equivalent to any area where access is not controlled is limited to less than 20 mrem during a fault condition.
4. For continuously occupied locations, the dose equivalent rate is ALARA but in no case greater than 0.5 mrem in one hour or 20 mrem in one week.
5. Dose equivalent rates where occupancy is not continuous is ALARA, but in no case exceeds 1 rem in one year for whole body radiation, or 3 rem in one year for the lens of the eye, or 10 rem in one year for any organ.

In addition to review and approval by the Radiation Safety Committee, final shield drawings must be approved by the Radiation Safety Committee Chair or the ESHQ Associate Chair. Shield drawings are verified by comparing the drawing to the actual configuration. Radiation surveys and fault studies are conducted to verify the adequacy of any new or modified shield configuration. The fault study methodology that is used to verify the adequacy of shielding is proscribed by additional Collider-Accelerator Department procedures, which are not elaborated here.[3] Any modifications to shielding configurations are likewise closely proscribed. Each facility and experiment is assigned a Liaison Physicist and Liaison Engineer. The Liaison Physicist is responsible, in consultation with the Radiation Safety Committee where appropriate, for determining safe conditions for any shielding modifications. The Liaison Engineer is responsible for ensuring that the safe conditions are met, for effecting any modification, and for notifying other responsible Collider-Accelerator Department personnel, including the Operations Coordinator, as well as experimenters both prior to and on completion of the modifications. Additional procedures exist to ensure that policy with respect to control of radioactive shielding is implemented, which are not elaborated here.

---

[1] http://www.agsrhichome.bnl.gov/AGS/Accel/SND/OPM/Ch09/09-01-12.PDF Procedure for Review of Collider-Accelerator Department Shielding Design

[2] http://www.rhichome.bnl.gov/AGS/Accel/SND/OPM/Ch08/08-13.PDF Collider-Accelerator Department Procedure for Shielding/Barrier Removal, Removal of Primary Area Beam Line Components, or Modifications

[3] http://www.rhichome.bnl.gov/AGS/Accel/SND/OPM/Ch09/09-01-09.PDF Fault Study Procedure for Primary and Secondary Areas

APPENDIX 4

Accelerator Safety Envelope

Section 1. Introduction

Section 2: BNL Safety Envelope Limits

Section 3: Corresponding ERL Safety Envelope Parameters

Section 4: Engineered Safety Systems Requiring Calibration, Testing, Maintenance, and Inspection

Section 5: Administrative Controls

DRAFT

Accelerator Safety Envelope

Title of Facility: Energy Recovery Linac (ERL)

Date of Initial ASE: March 30, 2008

Subsequent Revision Dates:

Version of the SAD that the ASE applies to: ERL SAD, May 12, 2008

Signature of Preparer:

_____

Signature of Collider-Accelerator Department Chair:

_____

Signature of Nuclear and Particle Physics Associate Laboratory Director:

_____

Signature of Deputy Director for Operations:

_____

DRAFT

ASE Contents:

Section 1. Introduction **197**

Section 2: BNL Safety Envelope Limits **198**

Section 3: Corresponding ERL Safety Envelope Parameters **198**

ERL Beam Limits in Terms of Electron Energy and Beam Power *198*

Control of Beam Loss *199*

Classification of Radiological Areas *199*

Access Controls *199*

Fire Protection *199*

Section 4: Engineered Safety Systems Requiring Calibration, Testing, Maintenance, and Inspection **200**

Section 5: Administrative Controls **201**

Section 1. Introduction

The ASE Requirements herein define the conditions, safe boundaries, and the administrative controls necessary to ensure safe ERL operations and to reduce the potential risk to the public, workers and environment.

1.1 The reference to the method used by the Collider-Accelerator Department for change control of the ASE is the BNL Subject Area on Accelerator Safety.

1.2 A variation beyond the boundaries described in Sections 1, 2, 3, and 4 of this ASE shall be treated as a violation of the ASE and shall be a reportable occurrence, as defined by the BNL SBMS Subject Area on Occurrence Reporting. A violation is defined as not satisfying a Requirement or its specific Authorized Alternative. C-A Department staff shall make notifications of occurrences according to the requirements in the C-A Operations Procedure Manual.

1.2.1 If a Requirement is not satisfied and it has a specific Authorized Alternative, implement the Authorized Alternate or stop the activity that uses the affected equipment within one hour.

1.3 Emergency actions may be taken that depart from these approved ASE Requirements when no actions consistent with the Requirements are immediately apparent and when these actions are needed to protect the public, worker and environmental safety. These actions shall be approved by the person in charge of facility safety, as defined in the

DRAFT

operating procedures, when the emergency occurs and shall be reported to C-AD management within 2-hours.

Section 2: BNL Safety Envelope Limits

This section contains the absolute limits that BNL places on ERL operations to ensure that BNL meets regulatory limits established to protect our environment, public and staff/visitors and that those operations are conducted within the assumptions of the ERL safety analyses documented in the **ERL SAD, May 12, 2008**. BNL Safety Envelope Limits for ERL operations are:

2.1. Less than 25 mrem in one year to individuals in other BNL Departments or Divisions adjacent to this Collider-Accelerator Department accelerator facility.

2.2. Less than 5 mrem in one year to a person located at the site boundary.

2.3. Offsite drinking water concentration and on-site potable well water concentration must not result in 4 mrem or greater to an individual in one year.

2.4. Less than 1250 mrem in one year to a Collider-Accelerator Department staff member.

2.5. Maximum tritium concentration of 10,000 pCi/L in the BNL sanitary sewer effluent, caused by liquid discharges from ERL facilities averaged over a 30-day interval.

2.6. In order to protect groundwater, if the annual activity concentration of sodium-22 or tritium in leachate is calculated to exceed 5% of the Drinking Water Standard, then a cap shall be used unless BNL Management is convinced otherwise.[39]

2.7. All emissions from ERL facilities are managed in accordance with the Air Emissions subject area.[40] If emissions are anticipated to exceed 0.1 mrem per year to the Maximally Exposed Individual, actions will be taken to ensure operations comply with NESHAP requirements including continuous emissions monitoring and permitting.

Section 3: Corresponding ERL Safety Envelope Parameters

This section identifies the measurable limitations on critical operating parameters that, in conjunction with the specifically identified hazard control considerations established by the facility design and construction, ensure that ERL operations will not exceed the corresponding Safety Envelope Limits discussed in Section 2. These parameters are derived from the safety analyses described in the **ERL SAD, May 12, 2008**. ERL safety envelope parameters are:

ERL Beam Limits in Terms of Electron Energy and Beam Power

[39] BNL SBMS Accelerator Safety Subject Area, Design Practice for Known Beam Loss Locations.
[40] BNL SBMS Subject Area, Radioactive Airborne Emissions.

DRAFT

3.1 Electron energy limit of 3.5 MeV for the super-conducting RF gun.

3.2 The power source of the superconducting gun is limited to delivering 1.2 MW of power to the gun.

3.3 Electron energy limit of 25 MeV for the ERL ring.

3.4 Electron beam power shall not exceed the equivalent of 10 MW of instantaneous power for the electron beam in the ERL ring.

3.5 The power source for the five-cell cavity will be limited to delivering a maximum of 60 kW of power to the cavity.

3.6 A beam power limit of 1.2 MW for a 3.5 MeV electron beam striking the beam dump.

Control of Beam Loss

3.1. Beam-loss-monitors, area-radiation monitors and area-radiation survey results shall be used in order to maintain beam loss "As Low as Reasonably Achievable" as defined in the BNL Radiological Manual.

Classification of Radiological Areas

3.5. Radiological area classifications during operations shall be in accord with requirements in the BNL Radiation Control Manual.

Access Controls

3.6. The Access Controls System shall be functional during operations with beam.

3.7 During the running period, area radiation monitors that are interfaced with the Access Controls System shall be within their calibration date.

3.8 During the running period, the locations of area radiation monitors interfaced with the Access Control System are to be configuration controlled.

Fire Protection

DRAFT

3.9 During periods of beam operation, when access to the primary beam areas is prohibited the installed fire detection and protection systems shall be operable.

Authorized Alternative: Within 2 hours of discovery, the Department Chair or designee may allow partial or full inoperability of any fire detection or protection system for up to 80 hours with beam operations if the benefit of continuing ERL operations is judged to outweigh the potential risk of fire damage. Operating procedures shall specify the compensatory actions to be taken during inoperability.

3.10 ERL magnets and power supplies may be energized if the smoke detection system for the energized area can transmit an alarm to summon the BNL Fire/Rescue Group.

Authorized Alternative: The Operations Coordinator, ESH Coordinator or designee may allow partial or full inoperability of any fire detection system or manual alarm station in occupied areas as long as a Fire Watch is posted who can verbally communicate with the BNL Fire/Rescue Group by radio or phone.

Section 4: Engineered Safety Systems Requiring Calibration, Testing, Maintenance, and Inspection

The systems and requirements for calibration, testing, maintenance, accuracy or inspections necessary to ensure the integrity of the ERL safety envelope parameters during operations are given in this section:

4.1. The Access Control System shall be functionally tested in accordance with requirements in the BNL Radiation Control Manual.

4.2. ERL ventilation exhaust fans used to prevent an oxygen deficiency event shall undergo annual testing (not to exceed 15 months).

4.3. ERL fire protection shall undergo annual testing (not to exceed 15 months).

4.4. Area radiation monitors shall undergo annual testing (not to exceed 15 months).

4.5. Radiological barriers shall undergo annual visual inspection (not to exceed 15 months).

DRAFT

Section 5: Administrative Controls

Administrative controls necessary to ensure the integrity of the ERL safety envelope parameters during operations are:

5.1. Minimum ERL Control Room Staffing

5.1.1. ERL Control Room: one Trained Operator and one other person shall be on duty when ERL beam is in operation. During beam operations, one of the two must remain in the ERL Control Room at all times.

Authorized Alternative: If extra person is incapacitated, the remaining operator may continue operations as long as manning requirements are restored within two hours.

5.2. On-shift operations staff shall be trained and qualified on their safety, operational and emergency responsibilities. Records of training and qualification shall be maintained on the Brookhaven Training Management System (BTMS).

5.3. Work planning and control systems shall comply with the requirements in the C-A Operations Procedure Manual.

5.4. Environmental management shall comply with the requirements in the C-A Operations Procedure Manual.

5.5. Experiment modification and review shall comply with the requirements in the C-A Operations Procedure Manual.

5.5.1. Each upgrade in the ERL beam parameters or change of ERL configuration shall be reviewed before running with beam.

5.6. Annually, the C-AD Accelerator Systems Safety Review Committee shall review ERL's routine operations and facility for safety.

5.6.1. ERL may lie dormant for a period greater than one year between runs and does not require a review during the dormancy period.

5.7. Industrial hazards shall be controlled in accordance with the applicable portions of the BNL SBMS Subject Area.

DRAFT

APPENDIX 5

Fault Study Results

Beam fault studies are conducted using the minimum beam intensity necessary to complete the study efficiently and consistent with ALARA practices. The beam is "ON" in the fault condition only as long as necessary for adequate survey measurements to be taken. Data for the fault study is kept on record and is used to verify that shielding is adequate for anticipated operations.

Fault studies will be performed after the ERL accelerator commissioners have control of the beam. Post-commissioning fault-study data will be recorded into this Appendix to the ERL SAD after the commissioning process is complete. Any changes to the shield design, as a result of a fault study finding, will be addressed in a USI to the SAD. Since fault studies are a post-SAD activity, dose rate calculations in Chapter 4 of the SAD are used to make initial estimates of radiation levels in order to implement appropriate radiological controls for commissioning. These controls, once proven effective by the fault study, verify the long-term radiological controls to be used during ERL operations.

DRAFT

APPENDIX 6

Qualitative Risk Assessments

Table A6-1 Vacuum.....
Table A6-2 External Events.....
Table A6-3 Electric Shock/Arc Flash.....
Table A6-4 Radiation External to Enclosure.....
Table A6-5 Radiation Inside Enclosure..... \
Table A6-6 Activation of Components.....
Table A6-7 Conventional/Industrial Hazards.....
Table A6-8 Airborne Releases.....
Table A6-9 Environmental – Cooling Water Spill.....
Table A6-10 Loss of Electrical Power.....
Table A6-11 Fire.....
Table A6-12 Environmental – Activated Soil.....
Table A6-13 Oxygen Deficiency Hazards (ODH)……..

DRAFT

Table A6-1 Qualitative Risk Assessment for ERL - Vacuum

FACILITY NAME: ERL
SYSTEM: Vacuum Beam Line
SUB-SYSTEM: Vacuum System, Beam Window
HAZARD: Vacuum

Event	Structural failure of vacuum boundary
Possible Consequences, Hazards	Implosion of any vacuum component could pose a potential health risk from flying objects or high noise.
Potential Initiators	Failure caused by worker mistake or inadvertent striking contact with vacuum boundary.

Risk Assessment Prior to Mitigation

Consequence	() High	() Medium	(X) Low	() Extremely Low
Frequency	() Anticipated High	(X) Anticipated Medium	() Unlikely	() Extremely Unlikely
Risk Category	() High Risk	() Medium	(X) Low Risk	() Extremely Low
Hazard Mitigation	1. Beam line vacuum components designed to meet consensus standards for compressive stress 2. Vacuum and pressure systems reviewed by the C-A Chief Mechanical Engineer or his designate and BNL LESHC Pressure Safety Committee 3. Vacuum components, except for windows, are constructed of heavy-walled material, per ASME Boiler and Pressure Vessel Code, Section VIII or equivalent to minimize the threat of implosion when evacuated 4. Many windows are covered 5. Training of Users and Staff			

Risk Assessment Following Mitigation

Consequence	() High	() Medium	(X) Low	() Extremely Low
Frequency	() Anticipated High	() Anticipated Medium	(X) Unlikely	() Extremely Unlikely
Risk Category	() High Risk	() Medium	() Low Risk	(X) Extremely Low

Is the mitigated hazard adequately controlled by existing BNL policies? Y/N Yes If No, roll up into ASE.
Is the hazard mitigation system needed for hazard control? Y/N No If Yes, need ASE requirement.

DRAFT

Table A6-2 Qualitative Risk Assessment for ERL – External Events

FACILITY NAME: ERL
SYSTEM: Entire Facility
SUB-SYSTEM: N/A
HAZARD: External Event (Earthquake, Tornado, Hurricane, Flood, Aircraft Impact, Forest Fire, near ERL facility)

Event	External event impacts ERL
Possible Consequences, Hazards	Personnel injuries, equipment/building damage or programmatic impact
Potential Initiators	Earthquake, severe weather, flooding, fire, aircraft impact

Risk Assessment Prior to Mitigation

Consequence	(X) High	() Medium	() Low	() Extremely Low
Frequency	() Anticipated High	() Anticipated Medium	() Unlikely	(X) Extremely Unlikely
Risk Category	() High Risk	() Medium	(X) Low Risk	() Extremely Low
Hazard Mitigation	1. Building designed to Uniform Building Code and designed to meet DOE O 420.1B, Facility Safety 2. Small radioactive inventory cannot cause offsite impacts 3. BNL Fire Group can respond quickly to forest fire; BNL has firebreaks 4. BNL Fire Group can respond quickly to fire near ERL 5. No active systems needed to protect personnel from adverse health effects after ERL off 6. Severe weather and flooding potential is extremely low; warning of these impending hazards will allow for ERL shutdown and for personnel safety 7. BNL Wildfire Prevention Program			

Risk Assessment Following Mitigation

Consequence	() High	() Medium	(X) Low	() Extremely Low
Frequency	() Anticipated High	() Anticipated Medium	() Unlikely	(X) Extremely Unlikely
Risk Category	() High Risk	() Medium	() Low Risk	(X) Extremely Low

Is the mitigated hazard adequately controlled by existing BNL policies? Y/N Yes If No, roll up into ASE.
Is the hazard mitigation system needed for hazard control? Y/N No If Yes, need ASE requirement.

DRAFT

Table A6-3 Qualitative Risk Assessment for ERL – Electric Shock/Arc Flash

FACILITY NAME: ERL
SYSTEM: Facility
SUB-SYSTEM: Magnets, Power Supplies, Instrumentation
HAZARD: Electric Shock/Arc Flash from Exposed Conductors and Operating Breakers/Disconnects

Event	Worker contacts energized conductor and receives electrical shock or experiences arc flash while operating breakers/disconnects
Possible Consequences, Hazards	Shock, impact injury, arc flash burns
Potential Initiators	Worker falls, fails to control position of limbs or tools, equipment failure, improper work controls, improper PPE use

Risk Assessment Prior to Mitigation

Consequence	(X) High	() Medium	() Low	() Extremely Low
Frequency	(X) Anticipated High	() Anticipated Medium	() Unlikely	() Extremely Unlikely
Risk Category	(X) High Risk	() Medium	() Low Risk	() Extremely Low
Hazard Mitigation	1. Exposed conductors and terminals are covered or barriered for protection of personnel 2. Training for workers 3. Use of work planning, LOTO and Permits 4. Use of proper PPE and compliance with NFPA 70E 5. Magnets de-energized when routine work is done 6. Electrical equipment is NRTL, or review is performed for electrical safety on all non-NRTL and 'in-house' built equipment by a qualified Electrical Equipment Inspector			

Risk Assessment Following Mitigation

Consequence	() High	() Medium	() Low	(X) Extremely Low
Frequency	() Anticipated High	() Anticipated Medium	(X) Unlikely	() Extremely Unlikely
Risk Category	() High Risk	() Medium	() Low Risk	(X) Extremely Low

Is the mitigated hazard adequately controlled by existing BNL policies? Y/N Yes If No, roll up into ASE.
Is the hazard mitigation system needed for hazard control? Y/N No If Yes, need ASE requirement.

DRAFT

Table A6-4 Qualitative Risk Assessment for ERL – Radiation External to Enclosure

Facility Name: ERL
System: Areas External to Shielded Components
Sub-System: ERL shielding and shield penetrations
Hazard: Prompt Beam Radiation

Event	Credible beam control fault
Possible Consequences, Hazards	Unwarranted radiation exposure due to abnormal radiation levels outside beam line components, penetrations and chicanes
Potential Initiators	Failure of magnet or magnet power supply, ineffective or inefficient beam tuning

Risk Assessment Prior to Mitigation

Consequence	() High	() Medium	() Low	(X) Extremely Low
Frequency	(X) Anticipated High	() Anticipated Medium	() Unlikely	() Extremely Unlikely
Risk Category	() High Risk	() Medium	(X) Low Risk	() Extremely Low
Hazard Mitigation	1. Primary beam will not penetrate shield materials 2. Beam tuned at low intensity and beam intensity limits 3. Operator and physicist training 4. Review of design of shields and penetrations by C-A RSC; review of fault studies 5. Radiological area postings 6. Klystron Room locked 7. Routine area radiation surveys 8. Periodic inspection of shielding to verify integrity 9. Interlocking radiation monitors			

Risk Assessment Following Mitigation

Consequence	() High	() Medium	() Low	(X) Extremely Low
Frequency	() Anticipated High	() Anticipated Medium	(X) Unlikely	() Extremely Unlikely
Risk Category	() High Risk	() Medium	() Low Risk	(X) Extremely Low

Is the mitigated hazard adequately controlled by existing BNL policies? Y/N Yes If No, roll up into ASE.
Is the hazard mitigation system needed for hazard control? Y/N No If Yes, need ASE requirement.

DRAFT

Table A6-5 Qualitative Risk Assessment for ERL – Radiation Inside Enclosure

FACILITY NAME: ERL
SYSTEM: Shielded Enclosures
SUB-SYSTEM: ERL Enclosure, Klystron Room
HAZARD: Prompt Beam Radiation inside Shielded Enclosures

Event	Person inside enclosure during operation
Possible Consequences, Hazards	Personal injury or death due to external prompt radiation associated with beam
Potential Initiators	Person inadvertently enters enclosure; person fails to leave before beam initiated

Risk Assessment Prior to Mitigation

Consequence	(X) High	() Medium	() Low	() Extremely Low
Frequency	() Anticipated High	(X) Anticipated Medium	() Unlikely	() Extremely Unlikely
Risk Category	() High Risk	(X) Medium	() Low Risk	() Extremely Low
Hazard Mitigation	1. Operating procedures 2. Worker / User training 3. Review of facility design for radiation safety by C-A RSC 4. ERL Enclosure and Klystron Room sweep procedures 5. ACS door locks and other access controls 6. Audible/visual alarms initiated by ACS inside enclosures before beam initiation, allowing sufficient time for un-swept individuals to manually stop beam initiation or exit enclosure to stop beam initiation 7. ACS automatic interlock to stop beam if access violation 8. ACS controls critical devices to automatically confine beam to enclosure, thus keeping beam out of downstream section with personnel inside			

Risk Assessment Following Mitigation

Consequence	() High	() Medium	(X) Low	() Extremely Low
Frequency	() Anticipated High	() Anticipated Medium	() Unlikely	(X) Extremely Unlikely
Risk Category	() High Risk	() Medium	() Low Risk	(X) Extremely Low

Is the mitigated hazard adequately controlled by existing BNL policies? Y/N Yes If No, roll up into ASE.
Is the hazard mitigation system needed for hazard control? Y/N Yes If Yes, need ASE requirement.

DRAFT

Table A6-6 Qualitative Risk Assessment for ERL – Activation of Components

FACILITY NAME: ERL
SYSTEM: Beam Dump, Other Activated Components
SUB-SYSTEM: N/A
HAZARD: External Radiation from Activated Beam Dump, Activated Magnets and Other Components

Event	Worker / Physicist inside ERL Cave during beam off periods
Possible Consequences, Hazards	Excessive external dose
Potential Initiators	Improper work planning, procedure violation

Risk Assessment Prior to Mitigation

Consequence	() High	() Medium	() Low	(X) Extremely Low
Frequency	(X) Anticipated High	() Anticipated Medium	() Unlikely	() Extremely Unlikely
Risk Category	() High Risk	() Medium	(X) Low Risk	() Extremely Low
Hazard Mitigation	1. Beam tuning keeps activation of magnets and beam–line components to a minimum 2. Work planning prior to authorizing start of work 3. Radiological surveys of work areas 4. RWP issued prior to start of work 5. ALARA design and administrative controls 6. C-A ALARA Committee reviews jobs and designs 7. Worker and operator training 8. Radiological postings warn personnel of high dose rates 9. Personnel entering High Radiation Areas wear alarming self-reading dosimeters			

Risk Assessment Following Mitigation

Consequence	() High	() Medium	() Low	(X) Extremely Low
Frequency	() Anticipated High	(X) Anticipated Medium	() Unlikely	() Extremely Unlikely
Risk Category	() High Risk	() Medium	() Low Risk	(X) Extremely Low

Is the mitigated hazard adequately controlled by existing BNL policies? Y/N Yes If No, roll up into ASE.
Is the hazard mitigation system needed for hazard control? Y/N No If Yes, need ASE requirement.

DRAFT

Table A6-7 Qualitative Risk Assessment for ERL – Conventional/Industrial Hazards

FACILITY NAME: ERL
SYSTEM: Entire Facility
SUB-SYSTEM: All Sub-systems
HAZARD: Noise, Pressure, Hazardous Atmospheres, Magnetic and RF Fields, Hoisting and Rigging Hazards, Heights, Cryogenic Fluids, Chemicals, Flammable / Explosive Gases, Falling Objects, Hot Surfaces, Trip Hazards, Welding/Cutting

Event	Injury resulting from industrial hazard
Possible Consequences, Hazards	Worker/physicist injury or death
Potential Initiators	Improper work planning, procedure violation

Risk Assessment Prior to Mitigation

Consequence	(X) High	() Medium	() Low	() Extremely Low
Frequency	(X) Anticipated High	() Anticipated Medium	() Unlikely	() Extremely Unlikely
Risk Category	(X) High Risk	() Medium	() Low Risk	() Extremely Low
Hazard Mitigation	1. Work planning prior to authorizing start of work 2. Worker operator training 3. Review and audit of conventional safety issues by C-A staff and ESH experts during Tier 1, work planning and/or ESH appraisals 4. Design review of accelerator modifications by ASSRC and qualified engineers 5. Meeting safety requirements defined by BNL SBMS 6. Meeting requirements in 10CFR851 7. Environmental reviews 8. Manager work observations			

Risk Assessment Following Mitigation

Consequence	() High	() Medium	(X) Low	() Extremely Low
Frequency	() Anticipated High	(X) Anticipated Medium	() Unlikely	() Extremely Unlikely
Risk Category	() High Risk	() Medium	(X) Low Risk	() Extremely Low

Is the mitigated hazard adequately controlled by existing BNL policies? Y/N Yes If No, roll up into ASE.
Is the hazard mitigation system needed for hazard control? Y/N No If Yes, need ASE requirement.

DRAFT

Table A6-8 Qualitative Risk Assessment for ERL – Airborne Releases

FACILITY NAME: ERL
SYSTEM: Ventilation System and Vacuum Pump Emissions
SUB-SYSTEM: Exhaust Systems
HAZARD: Radioactive or Hazardous Materials

Event	Uncontrolled release of airborne radioactive or hazardous materials
Possible Consequences, Hazards	Adverse health effects to workers (public health effects not possible)
Potential Initiators	Improper work planning, violation of procedures, human error

Risk Assessment Prior to Mitigation

Consequence	() High	() Medium	() Low	(X) Extremely Low
Frequency	(X) Anticipated High	() Anticipated Medium	() Unlikely	() Extremely Unlikely
Risk Category	() High Risk	() Medium	(X) Low Risk	() Extremely Low
Hazard Mitigation	1. Radioactive airborne concentrations are insignificant 2. Work planning prior to authorizing start of work 3. Worker and operator training 4. Conduct of Operations system 5. Review of accelerator modifications by C-A ASSRC 6. Review and monitoring of IH airborne hazards by C-AD ESSHQ Division 7. Meeting requirements defined by BNL SBMS 8. Environmental Management System 9. OSH Management System 10. Chemical Management System			

Risk Assessment Following Mitigation

Consequence	() High	() Medium	() Low	(X) Extremely Low
Frequency	() Anticipated High	(X) Anticipated Medium	() Unlikely	() Extremely Unlikely
Risk Category	() High Risk	() Medium	() Low Risk	(X) Extremely Low

Is the mitigated hazard adequately controlled by existing BNL policies? Y/N Yes If No, roll up into ASE.
Is the hazard mitigation system needed for hazard control? Y/N No If Yes, need ASE requirement.

DRAFT

Table A6-7 Qualitative Risk Assessment for ERL – Environmental

FACILITY NAME: ERL
SYSTEM: Cooling Water System
SUB-SYSTEM: Radioactive Water
HAZARD: Soil and Groundwater Contamination

Event	Spill of activated cooling water to soil
Possible Consequences, Hazards	Groundwater contamination, internal dose to BNL personnel or public
Potential Initiators	Water pressure boundary failure, procedure violation, improper work planning

Risk Assessment Prior to Mitigation

Consequence	() High	() Medium	() Low	(X) Extremely Low
Frequency	() Anticipated High	(X) Anticipated Medium	() Unlikely	() Extremely Unlikely
Risk Category	() High Risk	() Medium	(X) Low Risk	() Extremely Low
Hazard Mitigation	1. Radioactive liquid concentrations are insignificant 2. Work planning prior to authorizing start of work 3. Worker and operator training 4. Conduct of Operations system 5. Review of accelerator modifications by C-A ASSRC 6. Meeting requirements defined by BNL SBMS 7. Environmental Management System 8. Chemical Management System 9. Extensive groundwater monitoring well system and groundwater-sampling program 10. Suffolk County Article 12 Code is followed in the design of cooling water systems and piping that contain significant amounts of tritium			

Risk Assessment Following Mitigation

Consequence	() High	() Medium	() Low	(X) Extremely Low
Frequency	() Anticipated High	() Anticipated Medium	(X) Unlikely	() Extremely Unlikely
Risk Category	() High Risk	() Medium	() Low Risk	(X) Extremely Low

Is the mitigated hazard adequately controlled by existing BNL policies? Y/N Yes If No, roll up into ASE.
Is the hazard mitigation system needed for hazard control? Y/N No If Yes, need ASE requirement.

DRAFT

Table A6-10 Qualitative Risk Assessment for ERL – Loss of Electrical Power

FACILITY NAME: ERL
SYSTEM: Entire Facility
SUB-SYSTEM: N/A
HAZARD: Hazards Produced As Power Is Lost To Equipment

Event	Loss of offsite power, local loss of power
Possible Consequences, Hazards	Personal safety hazards, programmatic loss
Potential Initiators	Equipment failure or operator error

Risk Assessment Prior to Mitigation

Consequence	() High	() Medium	() Low	(X) Extremely Low
Frequency	(X) Anticipated High	() Anticipated Medium	() Unlikely	() Extremely Unlikely
Risk Category	() High Risk	() Medium	(X) Low Risk	() Extremely Low
Hazard Mitigation	1. Integrated Safety Management program assures proper work planning prior to authorizing start of work 2. Worker and operator training 3. Review of conventional safety by C-A ASSRC and BNL ESH Committees 4. Backup power supplied to required systems to reduce programmatic impact 5. ERL automatically shuts down upon loss of electrical power 6. Emergency lighting 7. BNL and ERL emergency procedures			

Risk Assessment Following Mitigation

Consequence	() High	() Medium	() Low	(X) Extremely Low
Frequency	() Anticipated High	(X) Anticipated Medium	() Unlikely	() Extremely Unlikely
Risk Category	() High Risk	() Medium	() Low Risk	(X) Extremely Low

Is the mitigated hazard adequately controlled by existing BNL policies? Y/N Yes If No, roll up into ASE.
Is the hazard mitigation system needed for hazard control? Y/N No If Yes, need ASE requirement.

DRAFT

Table A6-9 Qualitative Risk Assessment for ERL – Fire

FACILITY NAME: ERL
SYSTEM: Entire Facility
SUB-SYSTEM: N/A
HAZARD: Personal Injury or Equipment Damage

Event	Magnets, power and control cables, laboratory equipment combustion
Possible Consequences, Hazards	Injury/death, programmatic impact
Potential Initiators	Loss of cooling to magnets or power supplies, transient combustibles start fire which spreads, electrical component overheating, flammable/combustible gas ignition, human error

Risk Assessment Prior to Mitigation

Consequence	(X) High	() Medium	() Low	() Extremely Low
Frequency	() Anticipated High	(X) Anticipated Medium	() Unlikely	() Extremely Unlikely
Risk Category	() High Risk	(X) Medium	() Low Risk	() Extremely Low
Hazard Mitigation	1. Combustible loading is minimized 2. Periodic safety inspections 3. Safety training 4. Fire detection and suppression system 5. Design reviewed by BNL Fire Protection Engineer 6. Design meets NFPA requirements 7. Ventilation system 8. Conventional safety reviewed by C-A ESRC 9. B912 FHA and implementation of protections			

Risk Assessment Following Mitigation

Consequence	() High	() Medium	(X) Low	() Extremely Low
Frequency	() Anticipated High	(X) Anticipated Medium	() Unlikely	() Extremely Unlikely
Risk Category	() High Risk	() Medium	(X) Low Risk	() Extremely Low

Is the mitigated hazard adequately controlled by existing BNL policies? Y/N Yes If No, roll up into ASE.
Is the hazard mitigation system needed for hazard control? Y/N Yes If Yes, need ASE requirement.

DRAFT

Table A6-12 Qualitative Risk Assessment for ERL – Environmental

FACILITY NAME: ERL
SYSTEM: Soil Shielding
SUB-SYSTEM: N/A
HAZARD: Groundwater Contamination

Event	Groundwater contamination from activated soil
Possible Consequences, Hazards	Internal radiation dose, loss of regulator/public confidence
Potential Initiators	Building 930 floor cracks allow water intrusion to activated soil, excessive beam loss in unexpected locations

Risk Assessment Prior to Mitigation

Consequence	() High	(X) Medium	() Low	() Extremely Low
Frequency	(X) Anticipated High	() Anticipated Medium	() Unlikely	() Extremely Unlikely
Risk Category	() High Risk	(X) Medium	() Low Risk	() Extremely Low
Hazard Mitigation	1. ERL has a sealed concrete floor 2. Periodic B912 floor inspections 3. Conduct of Operations system 4. Beam tuning procedures to reduce soil activation 5. Operator training 6. C-AD Environmental Management System 7. Extensive groundwater monitoring well system and sampling program in place 8. Long travel time for plume to reach BNL site boundary			

Risk Assessment Following Mitigation

Consequence	() High	() Medium	(X) Low	() Extremely Low
Frequency	() Anticipated High	(X) Anticipated Medium	() Unlikely	() Extremely Unlikely
Risk Category	() High Risk	() Medium	(X) Low Risk	() Extremely Low

Is the mitigated hazard adequately controlled by existing BNL policies? Y/N Yes If No, roll up into ASE.
Is the hazard mitigation system needed for hazard control? Y/N Yes If Yes, need ASE requirement.

DRAFT

Table A6-13 Qualitative Risk Assessment for ERL – Oxygen Deficiency Hazards (ODH)

FACILITY NAME: ERL
SYSTEM: ERL Facilities
SUB-SYSTEM: Cryogenic liquids, inert gas use/storage
HAZARD: Oxygen Deficiency

Event	Breathing air displaced causing reduced oxygen concentration
Possible Consequences, Hazards	Illness, asphyxiation
Potential Initiators	Significant release of gases to area or room

Risk Assessment Prior to Mitigation

Consequence	(X) High	() Medium	() Low	() Extremely Low
Frequency	() Anticipated High	(X) Anticipated Medium	() Unlikely	() Extremely Unlikely
Risk Category	() High Risk	(X) Medium	() Low Risk	() Extremely Low
Hazard Mitigation	1. ODH hazards analyzed and controls in place as per BNL SBMS requirements 2. Work planning and LOTO 3. Review of ODH hazards and controls by C-AD ASSRC 4. Review of ODH hazards and controls by BNL LESHC Cryogenic Subcommittee 5. Cryogenic pressure boundary designs meet ASME Code and appropriate consensus stands designs and testing requirements			

Risk Assessment Following Mitigation

Consequence	() High	(X) Medium	() Low	(X) Extremely Low
Frequency	() Anticipated High	() Anticipated Medium	(X) Unlikely	() Extremely Unlikely
Risk Category	() High Risk	() Medium	(X) Low Risk	() Extremely Low

Is the mitigated hazard adequately controlled by existing BNL policies? Y/N Yes If No, roll up into ASE.
Is the hazard mitigation system needed for hazard control? Y/N Yes If Yes, need ASE requirement.

DRAFT

APPENDIX 7

Cooling Water Activation

DRAFT

Water Activation in ERL Test Area

D. Beavis
May 5, 2006
Amended May 8, 2006

A simple estimate is made below for the expected radioactive concentrations in water at the ERL test area for the dipole magnets.

W.P Swanson (Ref. 1) provides a simple method to estimate the radioactive saturation concentrations in water for electron beams stopped in water. Table XXXIIa lists the activation products per kW of stopped electrons in water (numbers provided below). It is suggested that for electron energies at or below 50 MeV that the numbers for O-15 be reduced by a factor of two and the other isotopes can have a larger reduction factor. A reduction of a factor of two will be used.

The bremsstrahlung photons only have a small fraction of their path length in the cooling water of the dipole magnets. It the water is approximated as a sheet of water from the magnet mid-plane to the top of the coil, it has dimensions 6.85cm by 0.23 cm thick. To account for the small photon path length in water the activation will be reduced by the thickness divided by 2 radiation lengths (0.23cm/72cm). Coupled with the factor of two discussed above the total reduction in activity will be 0.0016. The routine loss of 50 MeV electron beam is expected to be 0.1 kW. It will be assumed that the beam loss occurs near a dipole. The activities with the expected beam loss and the total reduction factor are shown in the third column of the table below.

The expected saturation activities are:

Nuclide	Sat. Activity (GBq/(kW))	Reduced GBq
O-15	330	0.053
O-14	3.7	0.0006
N-13	3.7	0.0006
C-11	15.	0.0024
C-10	3.7	0.0006
Be-7	1.5	0.00024
H-3	7.4	0.0012

Several factors are needed to get the concentration and expected dose rates. From the numbers above the activity and dose will be dominated by the O-15 so we will ignore the other concentrations. The water system has a volume of approximately 2300 liters (600 gallons). The saturation concentration of O-15 is 23 Bq/cc. Estimates of the potential dose rate will require information on the water geometry and the conversion factor for gamma rate to dose. Following the discussion of Sullivan (Ref 2.) we will assume that the decays of O-15 will produce two 0.51 MeV gammas. We have a conversion factor (see Ref. 2) of 2.31*10**-10 rads/(gamma-cm**2).

DRAFT

The dose rate will be estimated at the surface for a 30cm diameter sphere of water and a 164 cm diameter sphere (entire water volume). The surface dose rates are (ignoring any self shielding):

164 cm diameter sphere 0.5 mrad/hr
30 cm diameter sphere 0.1 mrad/hr

Based on the approximations discussed above it is expected that the actual concentrations and dose rates will be smaller.

The tritium concentration can be obtained from the numbers above. The saturation activity is equal to the production rate. The production rate is therefore 1.2*10**6 H-3 atoms/s. The beam is expected to be operated for 40 hours per month and nine months per year for a total of 1.3*10**6 seconds per years. The water system has a volume of 2300 liters. The expected concentration of tritium in the cooling water after one year of operation is 6.8*10**8 H-3 atoms/liter. The activity is the decay constant times the number of atoms. The decay constant for tritium is 1.8*10**-9/sec and 1 Ci = 3.7*10**10 decays per second. The activity concentration for tritium is 33 pCi/liter after one year of operation.

References

1. W.P. Swanson, Radiological Safety Aspects of the Operation of Electron Linear Accelerators, Tech. Rep. Series No. 188, Int. At. Energy Agency, Vienna, 1979.
2. A.H. Sullivan, A guide to Radiation and Radioactivity Levels Near High Energy Particle Accelerators, 1992

DRAFT

APPENDIX 8

Air Activation

DRAFT

Air Activation in ERL Test Area

D. Beavis
May 3, 2006

A simple estimate is made below for the upper limit on the expected radioactive air concentrations in the ERL test area.

W.P Swanson (Ref. 1) provides for a simple method to estimate the radioactive saturation concentrations in air that are produced by electron beams. It is assumed that the electron beam is incident on a high-Z thick target. Numbers for the saturation activity are given in Table XXXa of Reference 1. It is expected that the actually targeting conditions will create less activity. In addition, the close in shielding which is expected to attenuate the forward bremsstrahlung for ERL will further reduce the air radioactive concentrations. To utilize Table XXXa of Reference 1 a few numbers are needed for the ERL test area.

I have approximated the room dimensions as 8.5m by 20.7m by 2.74 m. I will further assume that the average distance in air from a loss point to a wall is on the average 4 meters. Finally I will assume that the routine 50MeV loss is 100 Watts.

The expected saturation concentrations are:

Nuclide	Average room saturation activity Concentration (Bq/cc)
H-3	$4.2*10^{-3}$
Be-7	$8.3*10^{-4}$
C-11	$2. *10^{-5}$
N-13	$4. *10^{-1}$
O-15	$4.6*10^{-2}$
N-16	$1.7*10^{-5}$
Cl-38	$1.8*10^{-4}$
Cl-39	$1.3*10^{-3}$

References

1. W.P. Swanson, Radiological Safety Aspects of the Operation of Electron Linear Accelerators, Tech. Rep. Series No. 188, Int. At. Energy Agency, Vienna, 1979.

DRAFT

Prototype Energy Recovery Linac: Safety Assessment Document and Safety Envelope

Presented to Laboratory Environmental, Health and Safety Committee (LESHC)

May 29, 2008

Collider-Accelerator Department

BROOKHAVEN NATIONAL LABORATORY
Brookhaven Science Associates

What is today's agenda?

- Ilan Ben-Zvi
  - ~15 minutes on ERL mission
- Ed Lessard
  - ~30 minutes on ERL layout and protections
- Ray Karol
  - ~30 minutes on hazards analyses
- Page by page comments from LESHC

Where is the ERL located?

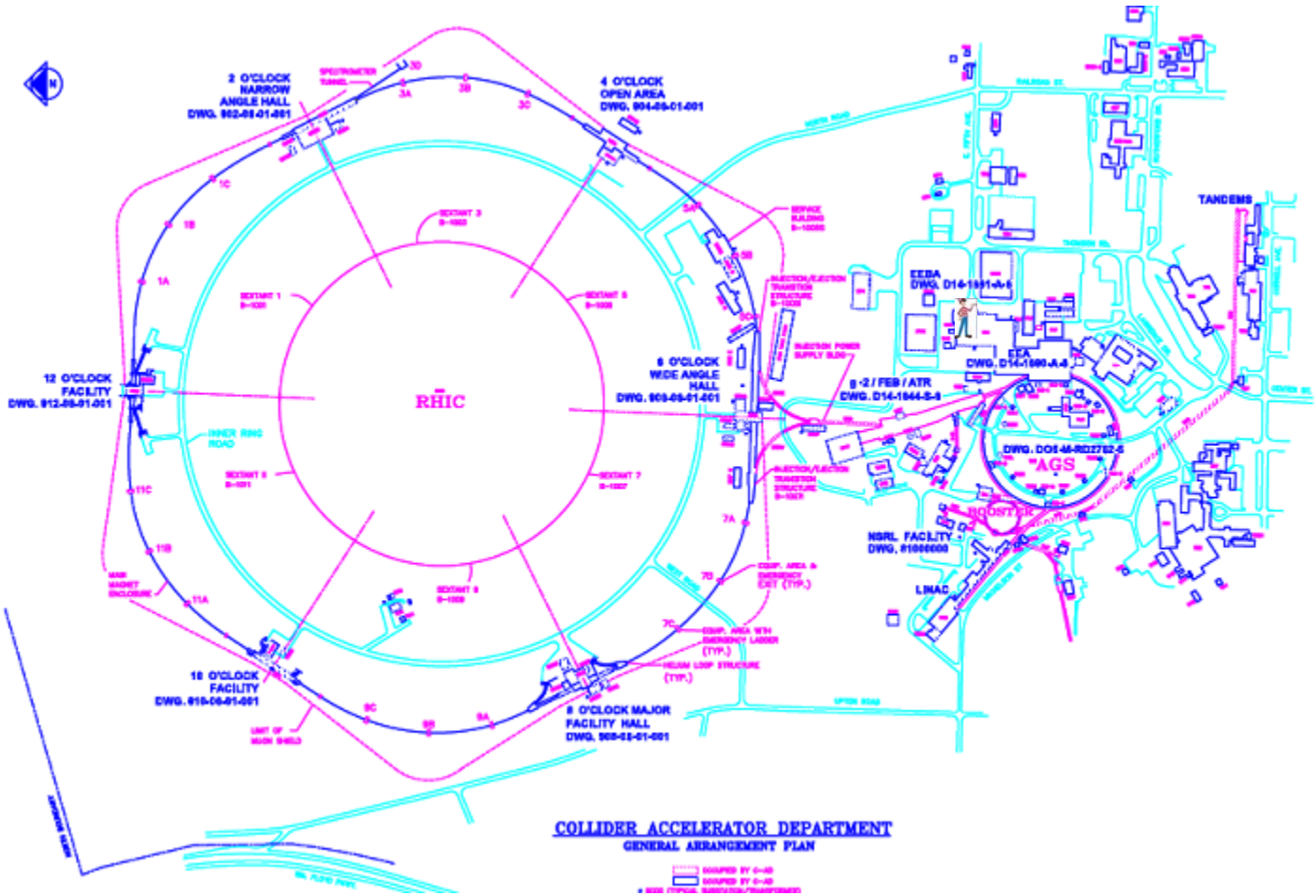

Collider-Accelerator Department

BROOKHAVEN NATIONAL LABORATORY
Brookhaven Science Associates

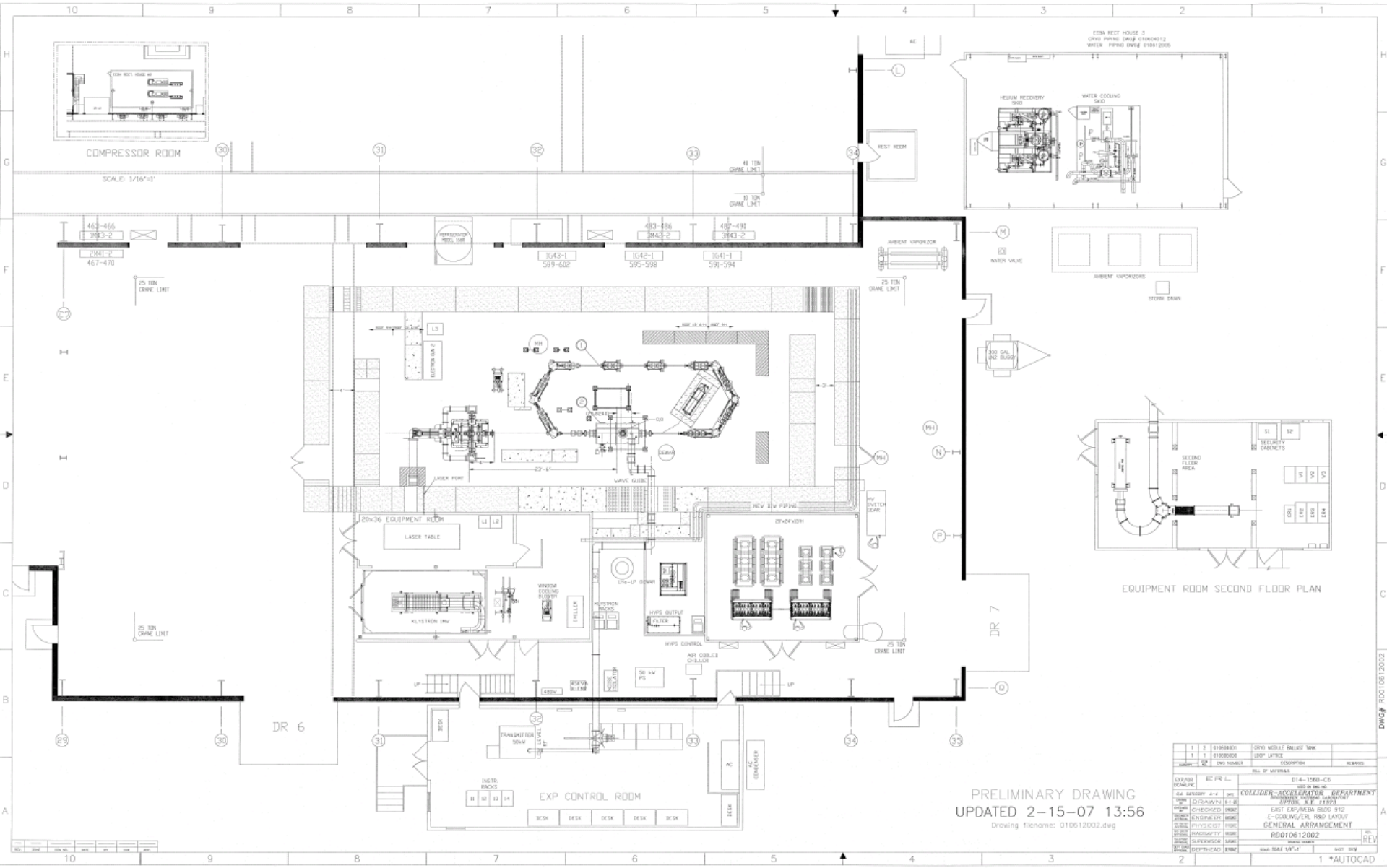

Collider-Accelerator Department

BROOKHAVEN NATIONAL LABORATORY
Brookhaven Science Associates

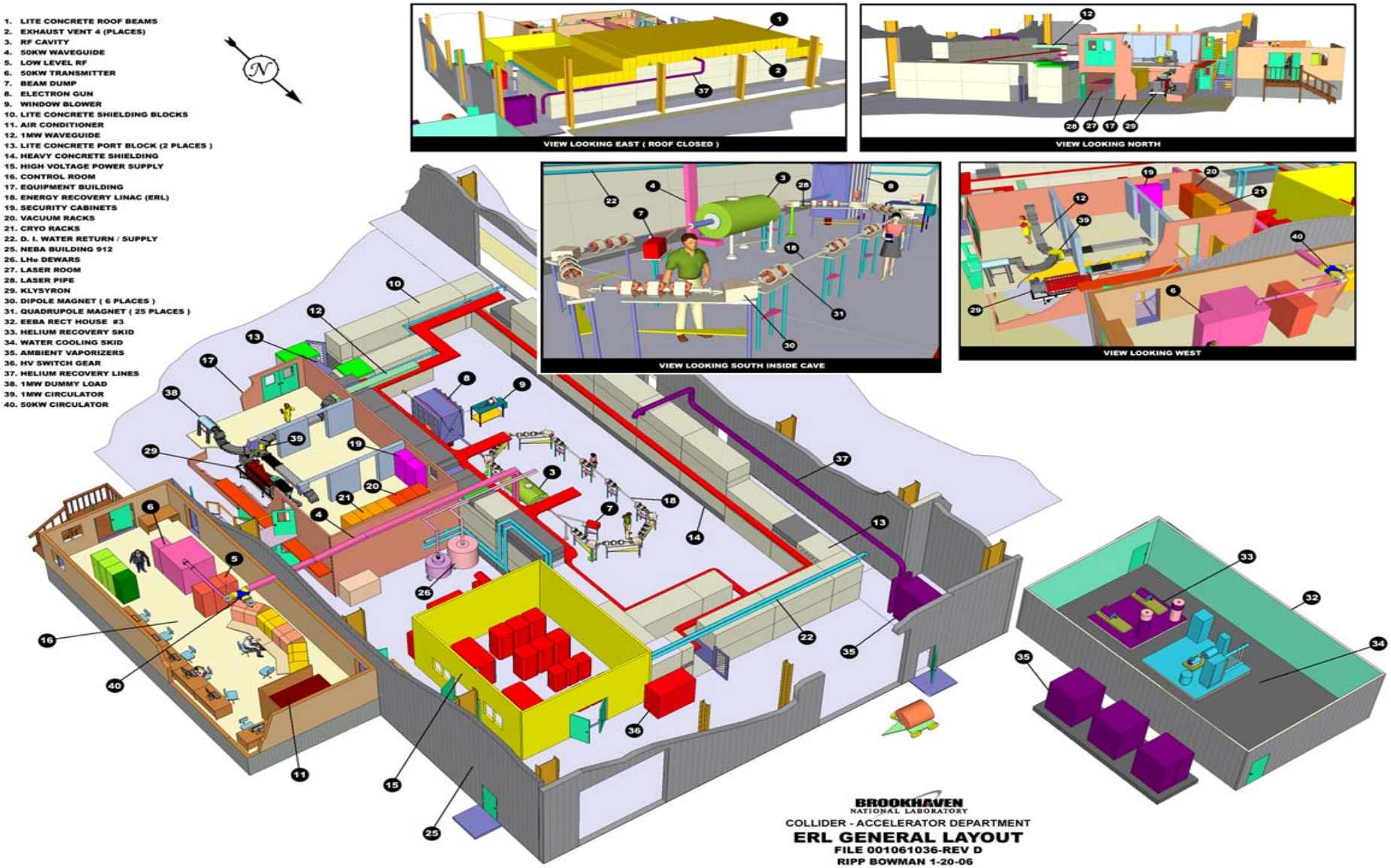

Collider-Accelerator Department

BROOKHAVEN NATIONAL LABORATORY
Brookhaven Science Associates

What does the ERL do with beam?

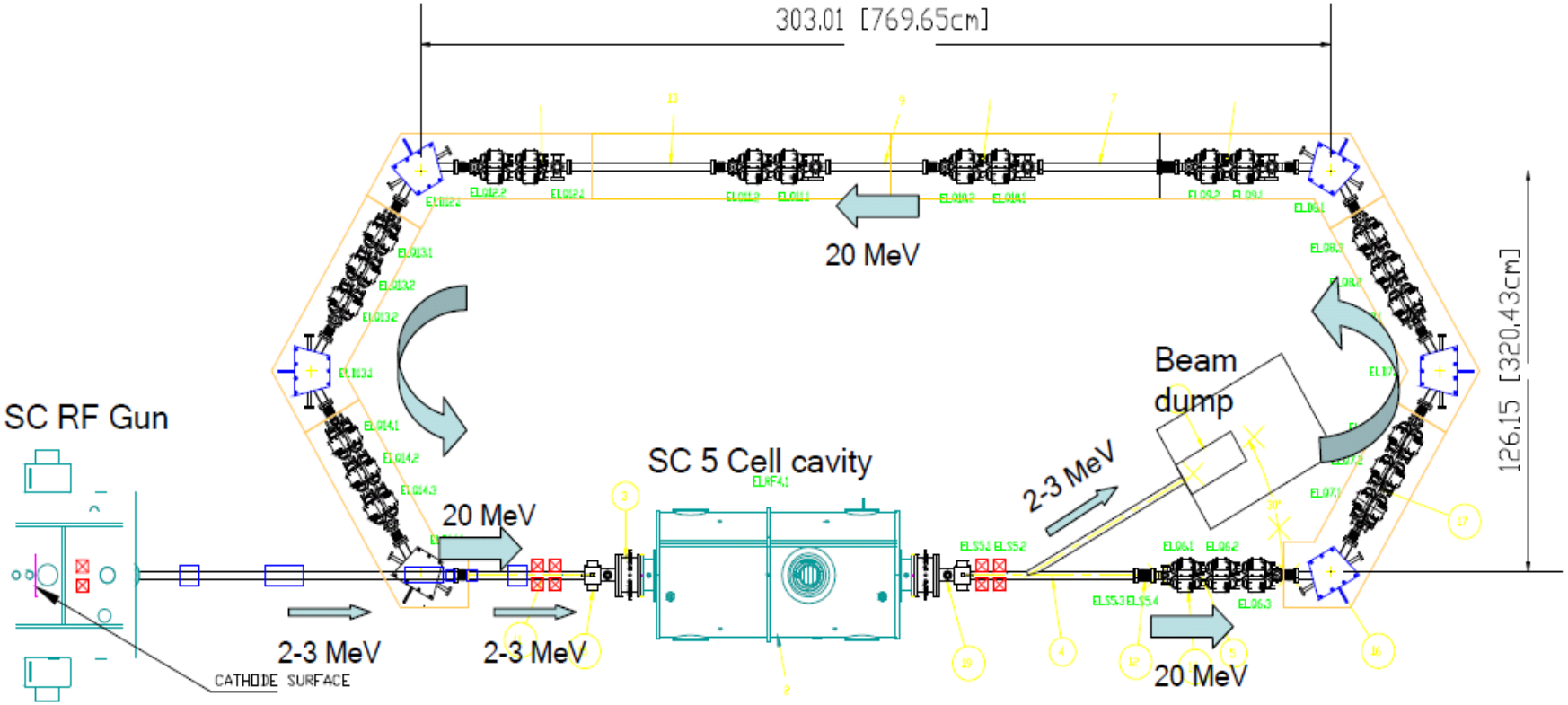

Codes of Record for ERL Prototype

- **Design Codes**
  - National Fire Protection Association (NFPA) 70, ''National Electrical Code'' (2005)
  - NFPA 70E, ''Standard for Electrical Safety in the Workplace'' (2004)
  - ASME Boiler and Pressure Vessel Code, sections II, V, VIII, IX and X. including Code Cases (2004)
  - ASME B31 Code for Pressure Piping as follows:
    - B31.3—2002—Process Piping (as applicable to the cryogenic system)
    - B31.9—1996—Building Services Piping (as applicable to the water cooling system)
- **Consensus Safety Standards**
  - ANSI Z136.1, Safe Use of Lasers (2000)
  - ACGIH Threshold Limit Values (2005)
- **Federal Regulations**
  - 10CFR835, Occupational Radiation Protection
  - 10CFR851, Worker Safety and Health Program
- **DOE Orders**
  - DOE Order 420.2B, Accelerator Safety
  - DOE Order 420.1A, Facility Safety, §§ 4.2 and 4.4
  - DOE Order 414.1C, Quality Assurance
  - DOE Order 5480.19, Conduct of Operations
  - DOE Order 5400.5, Radiation Protection of the Public and the Environment
  - DOE Order 450.5, Environmental Protection Program
  - DOE Order 435.1, Radioactive Waste Management
  - DOE Order 243.1, Records Management Program
  - DOE STD-1020-2002, Natural Phenomena Hazards Design And Evaluation Criteria For DOE Facilities

Commissioning Plan

- Machine to be completed in 2010
  - In 2009, G5 test
  - In 2010, demonstrate energy recovery
- Two-ARR process:
  - G5 commissioning
  - Full energy commissioning and operations

Authorization Document Schedule

- 7-30-08, Committee Reviews Completed
- 8-31-08, Pressure vessel approvals
- 9-30-08, SAD and ASE sent to DOE
- 01-30-09, ARR Report on G5 Test
- 02-25-09, Authorized for G5 Test
- 03-01-09, Conduct of Operations Matrix
- 04-30-09, ARR Report on Operations
- 05-05-09, Authorized for Operations

Introduction to the SAD

- Scope of SAD
  - Basic understanding of the mission of ERL Prototype
- Credited Engineered Controls
  - Access Control System (ACS)
  - ODH ventilation fan
  - Fire-protection system
  - Fixed-location interlocking-radiation Monitors
  - Shielding
  - Kirk-key system
- Credited Administrative Controls
  - Conduct of Operations

Summary and Conclusions in SAD

- Summary
  - Extractable beam goes to beam dump
  - Two points of entry, one beam enclosure
  - Multiple operators
  - Multiple active safety systems
  - Able to create radiological areas
  - Potential for oxygen deficiency
  - Off-site impacts are negligible
  - Major on-site impacts are negligible
- Conclusion
  - ERL is an accelerator as defined by DOE O 420.2B

Fire Protection Features

- Transformers have over-current protection
- Two 100 KV transformers; 800 gal. FR3 fluid
- HSSD in ceiling of NEBA
- Sprinklers and smokes turn off power to 100 KV transformers
- Fire-alarm turns off 100 KV transformers
- Procedure for manual power turn-off
- Combustibles control plan
- Annual fire-protection system tests
- Fire protection system reviewed by BNL Fire Protection Engineer

Radiation Protection Features

- Beam is disabled or access control area is secured
- Only RSC approved active fail-safe devices are used
- The system is designed to be fail-safe
- Redundant critical devices are used to disable the beam
- Redundant interlocks are used to secure enclosure
- Shielding designed to limit annual dose to < 500 mrem
- Fault-dose protection-system designed to < 20 mrem per event
- Sweep and reset by trained operators
- Crash cord
- Audible and visual beam imminent warning
- Access control system testing
- Radiation protections reviewed and approved by Radiation Safety Committee

ODH Protection Features

- Interlocks for ODH ventilation fan
- Limit ODH to > 16% with fan
- Emergency power source
- ODH sensors and alarms
- ODH building classification system
- Annual ODH ventilation system tests
- ODH calculations reviewed and approved by BNL Cryogenic and Pressure Safety Sub-Committee (CPSS)

Laser and RF Protection Features

- RF radiation contained in waveguide or vacuum enclosure
- Laser and RF room-accesses controlled by interlocks
- Laser beam transported in enclosed pipe
- Protective housing for laser with interlocks
- Beam stop for laser
- Laser activation warning system
- Laser operating procedures
- Laser reviewed by BNL Laser Safety Officer

Over-Pressure Protection Features

- U stamped pressure vessels
- UV stamped relief valves on vessels
- Relief valves/burst disks <15 psig for vacuum vessels
- Drawings, sketches and calculations on file
- Pressure testing and weld inspections by qualified personnel
- Reviewed and approved by BNL CPSS
- Expansion tanks in water-cooling system located on low-pressure side

Electrical Protection Features

- NRTL or equivalent rated equipment
- LOTO capability for all equipment
- LOTO procedures
- Bonding and grounds on equipment and cable tray
- Conductors covered or shielded
- Kirk-key system for power supplies
- Components labeled

CA ESSHQ Operations Applicable to ERL Prototype

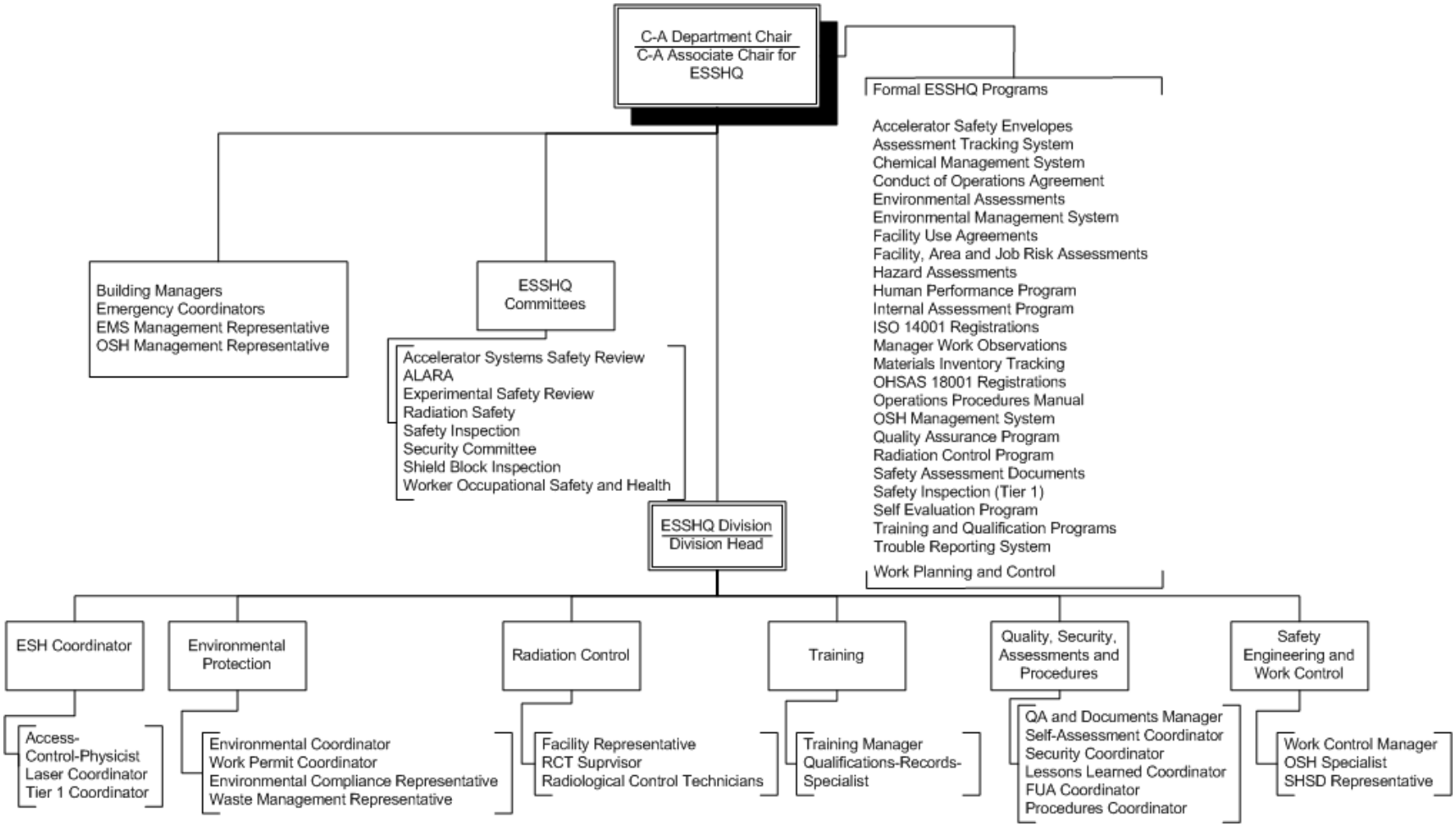

Collider-Accelerator Department

BROOKHAVEN NATIONAL LABORATORY
Brookhaven Science Associates

ERL Prototype Draft Conduct of Operations

1 Organization and Administration
2 Shift Routines and Operating Practices
3 Control Area Activities
4 Communications
5 Control of Training During Work Activities
6 Investigation of Abnormal Events, Conditions and Trends
7 Notifications
8 Control of Equipment & System Status
9 Lockouts and Tagouts
10 Independent Verification
11 Logkeeping
12 Turnover and Assumption of Responsibilities
13 Control of Interrelated Processes
14 Required Reading
15 Timely Instructions/Orders
16 Procedures
17 Operator Aid Postings
18 Component Labeling

Deleted: On-Shift
Deleted: Occurrences
Deleted: Operations
Deleted: Operations Aspects of Unique Processes
Deleted: to Operators
Deleted: Operations
Deleted: Equipment
Deleted: and Piping

ERL Prototype Operations

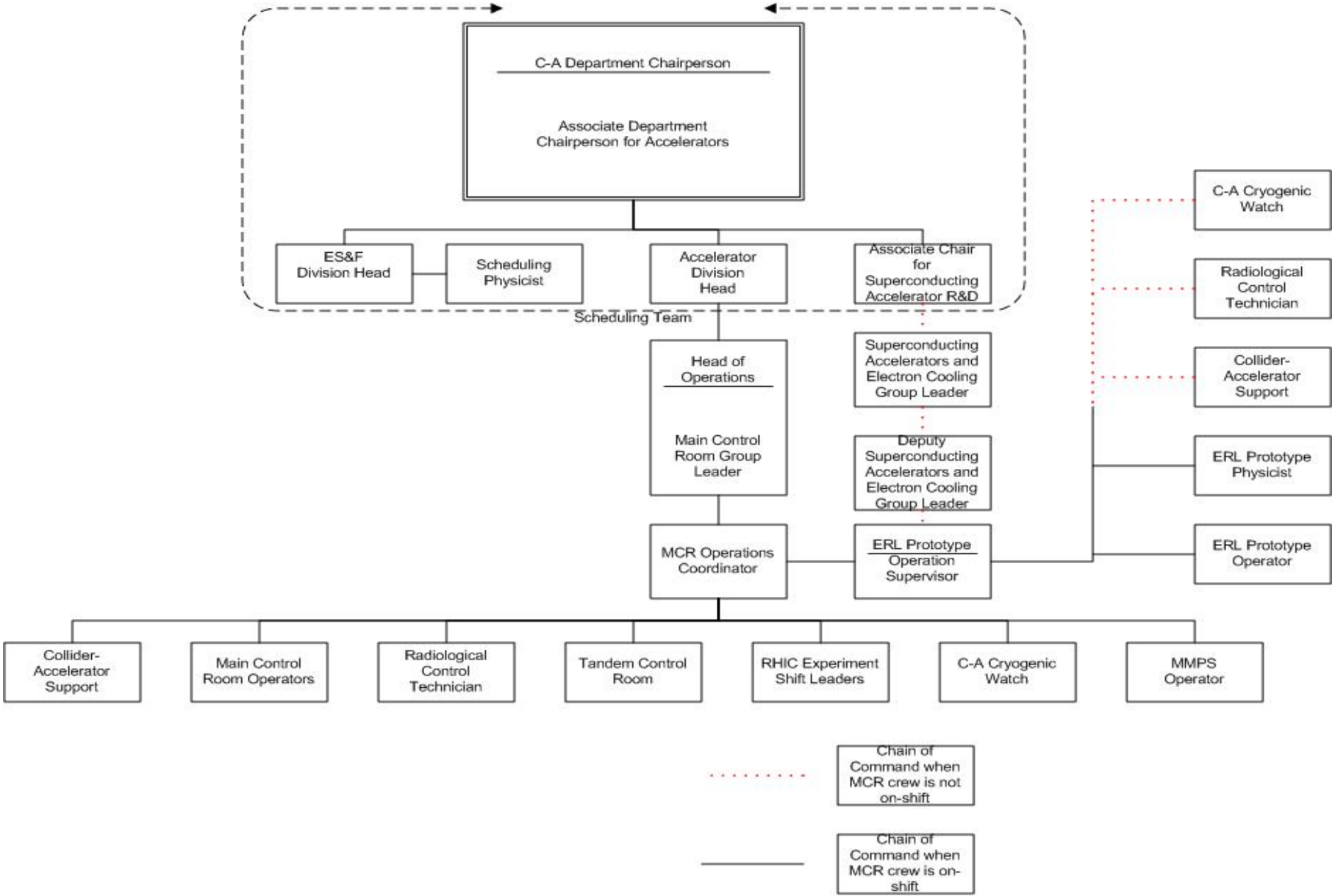

Safety Analysis - Ray Karol

- Hazard Analysis Method
- Hazard Analysis
- Hazard Controls
- Routine Failures
- Maximum Credible Accidents
- Risk Assessment

Hazard Analysis Method

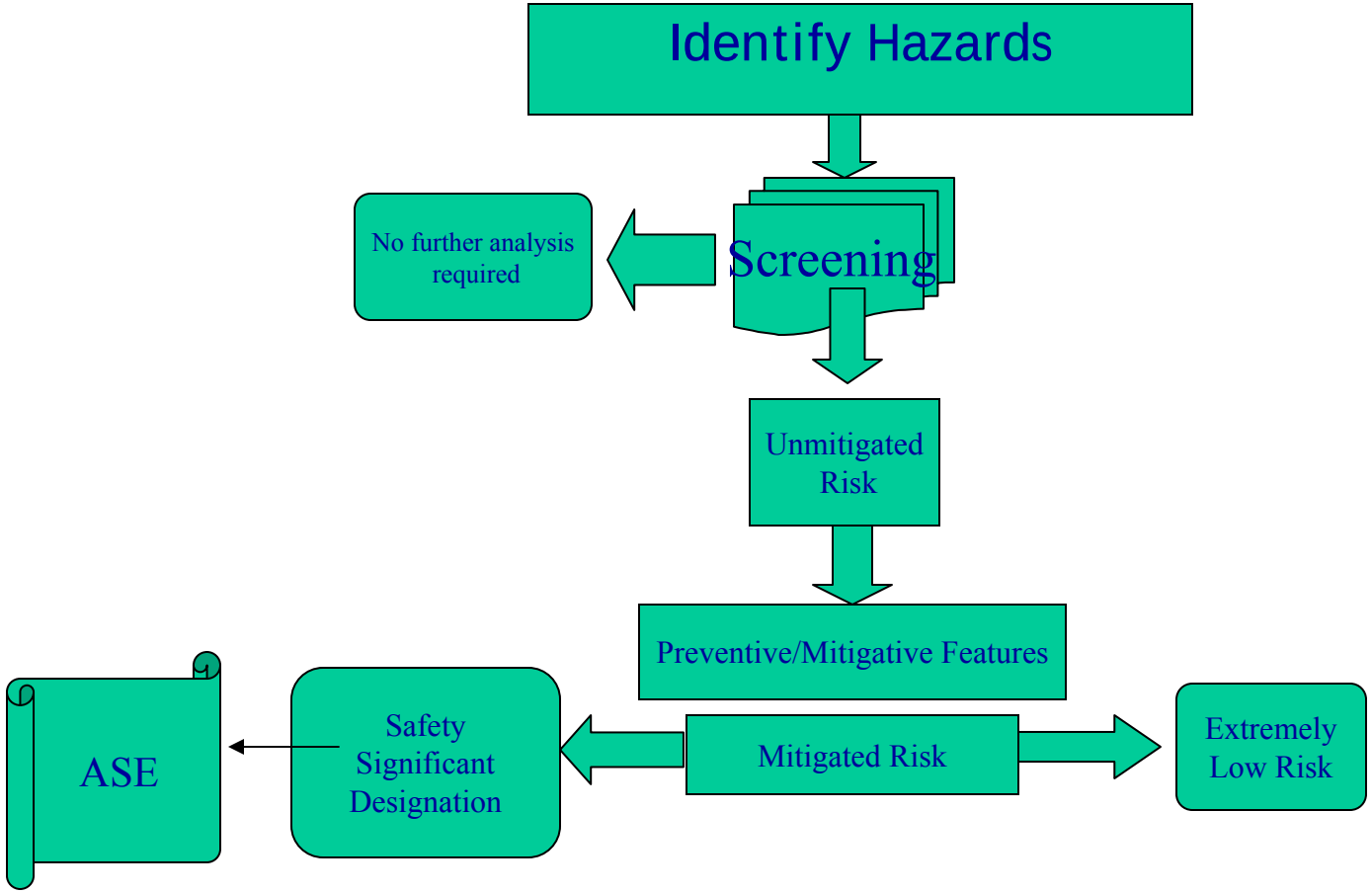

Conventional Hazards

- Controlled by existing methods and designs used over the last 48 years at AGS/RHIC:
  - Work planning/experimental planning
  - Design
  - Consensus standards
  - Committee and safety inspections
  - Self assessment
  - C-A OPM
  - BNL SBMS
  - Training/retraining
  - PPE
  - Worker feedback
  - Manager commitment to safety
  - Accountability rules
- No further analyses required <u>except for ODH and ozone</u>

Environmental Hazards

- Soil Activation not possible
- Cooling system activation (negligible)
- Air activation (negligible)
- Waste generation
  - Regulated industrial/Universal
  - Hazardous
  - Radioactive

Radiation Hazards

- Primary beam radiations and field emission x-rays
- Beam losses during routine/faulted operations
  - Labyrinths and penetrations
  - Through shielding
- Skyshine
- Activated air
- Activated materials
- Release of activated cooling water

Radiation Calculation Model and Code References

- W.P. Swanson, Radiological Safety Aspects of the Operation of Electron Linear Accelerators, Technical Report Series No. 188, IAEA, Vienna, 1979.
- A.H. Sullivan, A guide to radiation Protection and Radioactivity Levels Near High Energy Particle Accelerators, Nuclear technology Publishing, 1992.
- K. Goebel et. al., "Evaluating Dose Rates Due to neutron leakage Through the Access Tunnels of the SPS", CERN LABII-RA Note/75-10 (1975).
- NCRP Report No. 144, Radiation protection for Particle Accelerator Facilities, NCRP 2003.
- P.K. Job and W.R. Casey," Preliminary Radiological Considerations for the Design and Operation of NSLS II Storage Ring and Booster Synchrotron", NSLS II Technical Note No. 13, July 25, 2006.
- D. B. Pelowitz, Ed. "MCNPX User's Manual, Version 2.5.0", April 2005; version 2.5f
- Microshield® Version 7.02, Grove Software, Inc., Lynchburg, VA 24502.

ERL Plan View

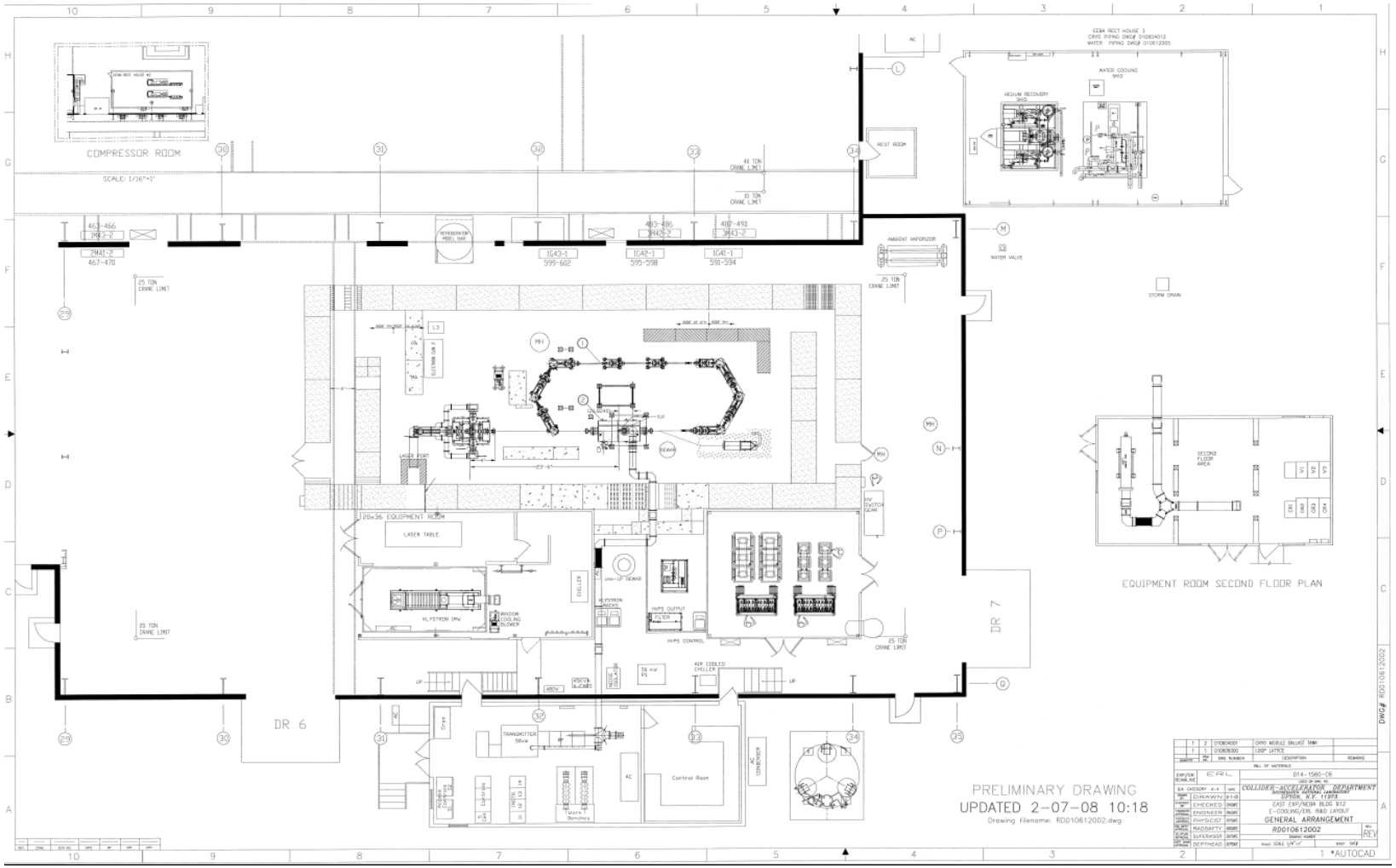

Assumptions for Dose Calculations

- Electron energy limit of 3.5 MeV for the SRF gun
- The power source of SRF gun is limited to 1.2 MW
- Electron energy limit of 25 MeV for the ERL ring
- Electron beam power less than the equivalent of 10 MW of instantaneous power for the electron beam in ERL ring
- The power source for the five-cell cavity limited to 60 kW
- A beam power of 1.2 MW for electron beam on beam dump

Summary of Dose Rate and Dose Estimates Outside ERL Cave for 3.5 and 25 MeV Electrons

Condition	Instantaneous dose rate from maximum beam loss	Dose rate from sustainable beam loss	Dose from sustainable beam loss assuming interlock occurs
3.5 MeV 0 degrees, γ	88 rad/h (1.2 MW loss)	0.073 mrad/h (1 W loss)	0.0002 mrad
3.5 MeV 90 degrees, γ	18 rad/h (1.2 MW loss)	0.015 mrad/h (1 W loss)	0.00004 mrad
25 MeV 0 degrees, γ	65 rad/h (10 MW loss)	4000 mrad/h (60 kW loss)	10 mrad
25 MeV 90 degrees, γ	13 rad/h (10 MW loss)	800 mrad/h (60 kW loss)	2 mrad
25 MeV neutrons	0.12 rem/h (10 MW loss)	6 mrem/h (60 kW loss)	0.015 mrem

Estimated Cooling Water Activation

- Dose rate from water system will be << 1 mrad/h
- ~35 pCi/L ^{3}H produced in the water each year of ERL operation
  - DWS is 20,000 pCi/L

Estimated Air Activation

- Important isotopes are ^{13}N (9.97 m – 90% contributor) and ^{15}O (2.04 m) assuming these radionuclides reach equilibrium with no air exchanges – very conservative
- Inhalation dose ~0
- Immersion dose:
  - 7 mrad/h at t=0
  - 3.1 mrad/h at t=10 m

Estimates of Skyshine Dose Rate from 25 MeV Beam

Occupied location	Maximum sustainable beam loss (60 kW)	Conservative sustainable beam loss (50 W)	Maximum Dose with 60 kW loss assuming beam interlocks
ERL Control Room	98 mrem/h	0.082 mrem/h	0.25 mrem
Building 966	26 mrem/h	0.022 mrem/h	0.07 mrem
Building 940	4 mrem/h	0.0033 mrem/h	0.01 mrem

Summary of Estimated Maximum Dose Rates and Fault Dose to Worker Near Penetrations

Penetration	Maximum Gamma Dose Rate (rem/h)	Maximum Neutron Dose Rate (rem/h)	Maximum Dose with Interlock Trip (mrem)
Laser port	2.5	0.024	6.3
1 MW Waveguide	50	0.48	130
Cryo Ports (5)	10	2.4	31
North Gate	0.31	2.2	6.3
North Labyrinth Buss Block	4.8	0.12	12
South Gate	59	0.19	150
Port in South Labyrinth (2)	72	0.72	180
West Trench	7.2	0.12	18
East Trench	2.4	1.9	11
South labyrinth buss block	0.12	0.36	1.2
ODH Vent (Roof)	12	4.8	4.2
Lifting Fixture holes (4)	1.7	0.01	4.3
50 kW waveguide	34	1.2	88

Radiation Risk

- Expected dose to workers from ERL operations and maintenance is expected to be ~30 mrem/y
- This may increase the innate cancer fatality risk (20%) by 0.06% over a 50-year career assuming LNT model
- No risk to public

Estimated Ozone Hazard From Radiation Induced Air Ionization

- ACGIH TLV is 0.1 ppm
- Conservative estimates
  - Assume 6 inches of air passage around dump, 1.2 MW beam
- Beam dump enclosure ~7500 ppm O_3
- Accelerator enclosure ~ 3 ppm O_3
- Low beam power studies will determine actual O_3 levels
  - Controls will be developed if needed
    - Example controls: ventilation, inert atmosphere around dump, etc.

ERL Oxygen Deficiency Hazard (ODH) Analysis

- Enclosures where ODH is possible
  - ERL accelerator enclosure (block house)
  - ERL Helium Recovery Building

Gas Source Terms

System Configuration		Fluid	Operating Pressure atm	Release Rate g/sec	Release Rate scfh	Release Rate scfm
BLOCK HOUSE						
CET EC-X	Failure of Helium transfer Line Bayonet	Helium	1.7	75	57330	956
CET EC-X	Failure of High pressure Dewar bayonet	Helium	3	130	99372	1656
CET EC-X	*Failure of LN2 transfer line, 1" Copper*	*Nitrogen*	*2.5*	*1800*	*196461*	*3274*
SCRFGUN+EC-X+ PLANT	Failure 3 atm, 4.5K/2K supply from plant	Helium	3	130	99372	1656
SCRFGUN+EC-X+ PLANT	Failure of Helium transfer Line Bayonet	Helium	1.7	75	57330	956
SCRFGUN+EC-X+ PLANT	*Failure of LN2 transfer line*	*Nitrogen*	*2.5*	*1800*	*196461*	*3274*
HE REVOVERY BUILDING						
	Kinney Vacuum pump discharge side rupture	*Helium*	*1.1*	*9*	*6879.6*	*1147*
	Sullair Compressor discharge side rupture	Helium	17	55	42042	781

SBMS ODH Analysis Method

- The Oxygen Deficiency Hazard fatality rate is defined as:

$$\Phi = PF$$

Where: Φ = the ODH fatality rate per hour
P = the expected rate of the event per hour, i.e. initiator frequency
F = the fatality factor for the event (Figure below)

Graph of the Fatality Factor (log scale) versus the Oxygen Partial Pressure

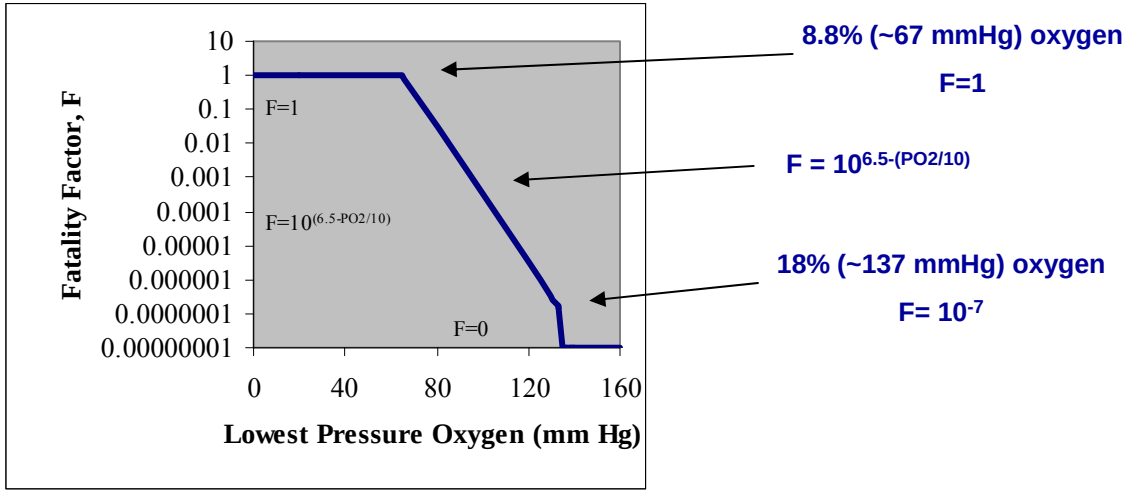

SBMS ODH Classifications

ODH Class	Fatality Rate Φ (per hour)
NA	$< 10^{-9}$
0	$\geq 10^{-9}$ but $< 10^{-7}$
1	$\geq 10^{-7}$ but $< 10^{-5}$
2	$\geq 10^{-5}$ but $< 10^{-3}$
3	$\geq 10^{-3}$ but $< 10^{-1}$
4	$> 10^{-1}$

SBMS ODH Control Requirements

	ODH Hazard Class				
Environmental Controls	**0**	**1**	**2**	**3**	**4**
1. Warning signs	X	X	X	X	X
2. Ventilation			X	X	X
ODH-Qualified Personnel Controls					
3. Medical approval as ODH-qualified		X	X	X	X
4. ODH training	X	X	X	X	X
5. Personal oxygen monitor		X	X	X	X
6. Self-rescue supplied atmosphere respirator		X	X	X	
7. Multiple personnel in communication			X		
8. Unexposed observer				X	X
9. Self-contained breathing apparatus					X

Assumptions for Estimates of ODH at ERL

- Building volumes account for free volume only
- ODH sensors trip at 18% oxygen concentration
- 30-second delay for ODH exhaust fan to start
- Inert gas spill rates constant
- Instantaneous uniform mixing
- Fans on emergency power
- Fans sized to keep O_2 concentration > 16% for credible release scenarios

Parameters for Estimate of ODH at ERL

Enclosure	Free Volume	Bounding Cryogenic Leak Location	Spill Rate (SCFM)	ODH Exhaust Fan Capacity (SCFM)
ERL Cave in B912	20,000 ft^3	Failure of 1-inch copper LN2 transfer line	3275	12,000
ERL Helium Recovery Building	9500 ft^3	Rupture of Kinney vacuum pump helium discharge line	1150	2000

Estimated Minimum Oxygen Concentrations

- Block house, nitrogen leak,1 inch copper line failure:

  16.6% O_2 P=0.128/h

- Block house, 500 L He Dewar failure, no exhaust fan:

  10.8% O_2 P= 10^{-6}/h

- Helium Recovery Building, helium line failure:

  16.9% O_2 P=0.219/h

Major Radiation Hazard Controls

- Design calculations and reviews
- Shielding, chicanes
- Access Control System (ACS)
  - Interlocks, chipmunks, card readers, crash chords, and visual/audible alarms for beam imminent
- Fences and posting
- Low-intensity-beam fault studies
- Training
- TLDs and digital dosimeters
- Follow BNL Radiation Control Manual and C-A RSC criteria
- ALARA reviews
- RWPs and work planning

Major Electrical Hazard Controls

- BNL SBMS and C-A OPM
- Design reviews
- Conductors covered
- Postings and barriers
- Fused circuits for experimental equipment
- Emergency off controls for power
- LOTO
- Training
- PPE for operating electrical equipment or “working on or near”
- Work Permits
- Committee and Chief Engineer reviews of changes
- Properly rated test equipment
- NRTL equipment or EEI inspections
- Safety inspections
- Work planning
- OHSAS 18001 management system

Major Fire Hazard Controls

- Fire Hazards Analysis (FHA)
- Adherence to Life Safety Code
- NFPA and DOE Guidelines (Improved Risk Design)
- Alarms, detection, suppression, fire extinguishers
- Emergency lighting
- Committee and Chief Engineer reviews of changes
- Training
- Safety inspections
- Work planning
- BNL Fire/Rescue Group response

Major Environmental Hazard Controls

- Beam tuning
- Training
- Safety inspections
- Work planning
- BNL back-flow prevention
- BNL Chemical Management System
- Committee review for changes
- Adherence to Suffolk County Article 12
- Waste handling and control procedures
- Water system alarms
- Process evaluations
- P2
- ISO 14001 management system

Maximum Credible Accidents

- Electrical and Fire Accidents
  - Not quantitatively analyzed – Nothing beyond existing accidents
  - FHA for Building 912
- Radiation Beam Fault
  - Less than 20 mrem in un-posted areas with interlocking Chipmunks
  - Beam fault studies at low intensity to confirm shield adequacy
  - Shielding will be added as required based on studies
- Oxygen Deficiency (ODH)
  - Reviewed by BNL CPSS

Accelerator Safety Envelope (ASE) – Ed Lessard

- Section 1: accountability
- Section 2: limits for ionizing radiation at BNL
- Section 3: limits for ionizing radiation at ERL
- Section 4: limits for engineered controls
- Section 5: administrative practices

ASE – Sections 1 and 2

- Section 1 - Accountability
  - Operating outside of Section 1-4 envelopes is Reportable Occurrence
  - Operating outside of Section 5 envelope follows SBMS accountability
    - May/may not be Reportable Occurrence
- Section 2 – BNL Limits
  - 0.1, 4, 5, 25, and 1250 mrem
  - 10,000 pCi/L
  - 5% DWS

ASE – Section 3

- Section 3 – ERL Operations Limits
  - SRF Gun: 1.2 MW and 3.5 MeV e^-
  - ERL Ring: 10 MW and 25 MeV e^-
  - 5-Cell Cavity: 60 kW
  - Beam Dump: 1.2 MW e^-
  - Beam loss must be ALARA (follow OPM ALARA procedures)
  - Area Classifications as per BNL Rad Con Manual
  - ACS and FPS must be functional during beam operations

ASE – Section 4

- ASE Section 4 - Engineered Control Limits
  - ACS tested in accordance with RadCon Manual
  - Ventilation exhaust fan annually tested
  - Fire protection annually tested
  - Area radiation monitors annually tested
  - Radiological barriers annually inspection

ASE – Section 5

- ASE Section 5 – Administrative Controls
  - One trained operator and one other person
  - On-shift staff must be trained and qualified
  - Work planning and control as per C-AD OPM
  - Environmental management as per C-AD OPM
  - Experiment modification as per C-AD OPM
  - ASSRC annual review of ERL operations
  - Industrial hazards controlled as per BNL SBMS

Quality Assurance

- Follows DOE O414.1C Outline
  - Program
  - Personnel Training and Qualification
  - Quality Improvement
  - Documents and Records
  - Work Processes
  - Design
  - Procurement
  - Inspection and Acceptance Testing
  - Management Assessment
  - Independent Assessment

Post-Operations Planning

Appendices

- Appendix 1, Shielding Analyses
- Appendix 2, ODH Calculations
- Appendix 3, C-A Department Shielding Policy
- Appendix 4, Accelerator Safety Envelope
- Appendix 5, Fault Study Results
- Appendix 6, Qualitative Risk Assessments
- Appendix 7, Cooling Water Activation
- Appendix 8, Air Activation

End of Presentations

- Page by page review

The R&D ERL Science

Ilan Ben-Zvi, C-AD

LESHC 08-13 ERL SAD and ASE Review

May 29, 2008

ERL-based eRHIC Design

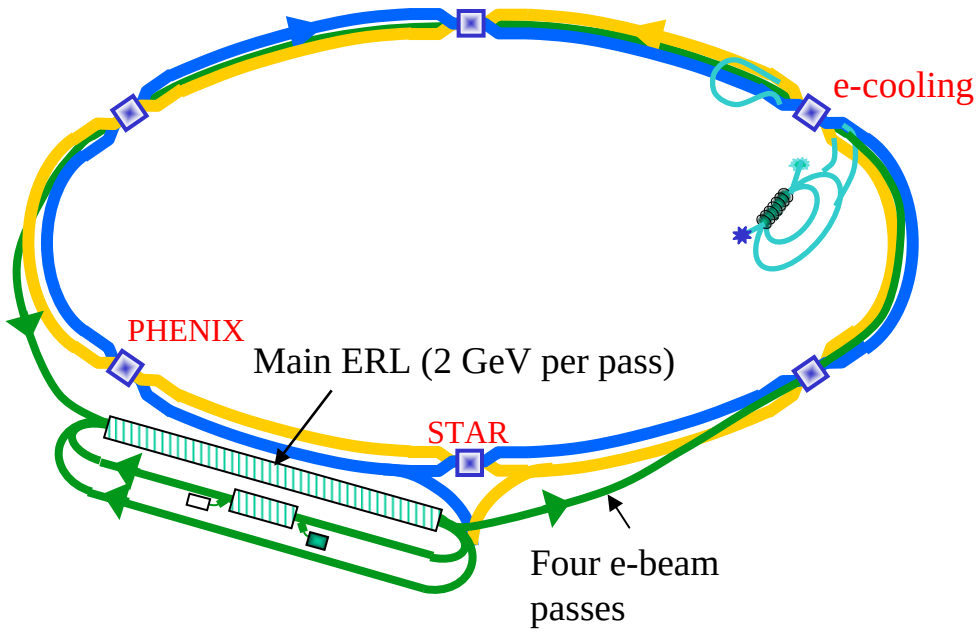

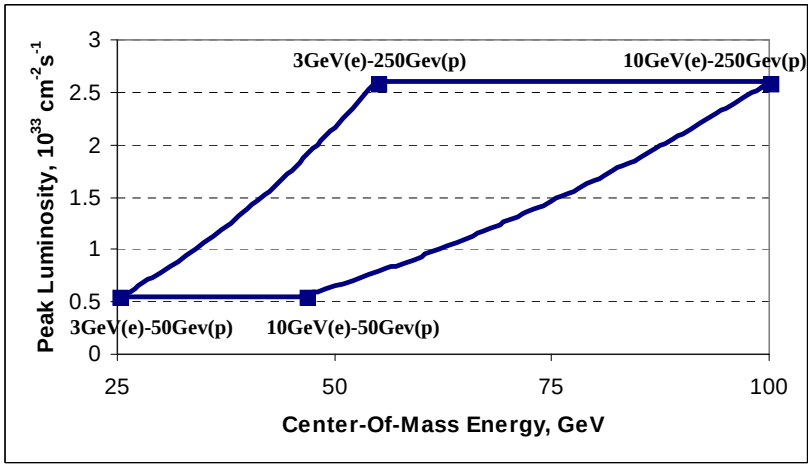

Compact recirculation loop magnets

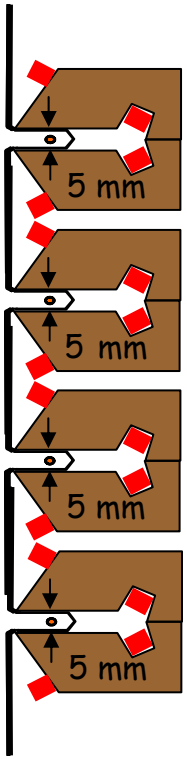

- Electron energy range from 3 to 10 GeV (upgrade to 20 GeV possible)
- Peak luminosity of 2.6×10^{33} cm^{-2}s^{-1} in electron-hadron collisions;
- high electron beam polarization (~80%);
- full polarization transparency at all energies for the electron beam;
- multiple electron-hadron interaction points (IPs) and detectors;
- ± 5 meter "element-free" straight section(s) for detector(s);
- ability to take full advantage of electron cooling of the hadron beams;
- easy variation of the electron bunch frequency to match the ion bunch frequency at different ion energies.

Electron cooling for eRHIC

RF frequency: 703.5 MHz
Charge: **2x5 nC/bunch**
Emittance: ≤ **3 μm** (rms,normalized)
Repetition frequency: 9.4 MHz
Average current: ~ 100 mA
Energy after gun: 5 MeV
Energy after ERL: 54 MeV

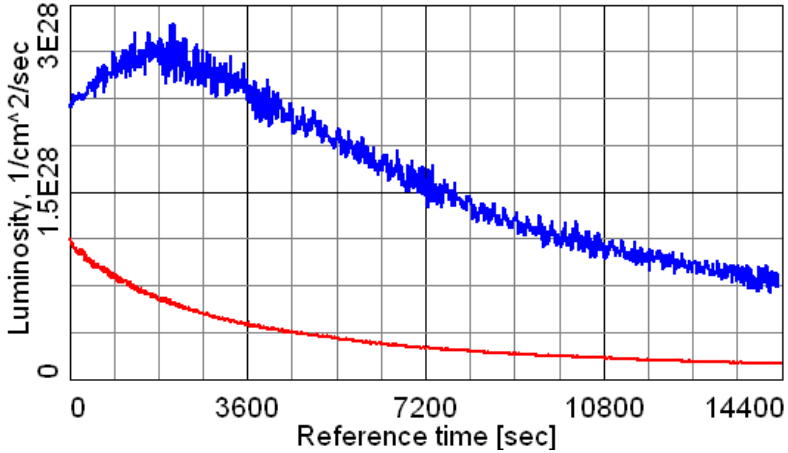

An ERL-based electron cooler at the RHIC 2 O'clock IP

The R&D ERL for electron cooling

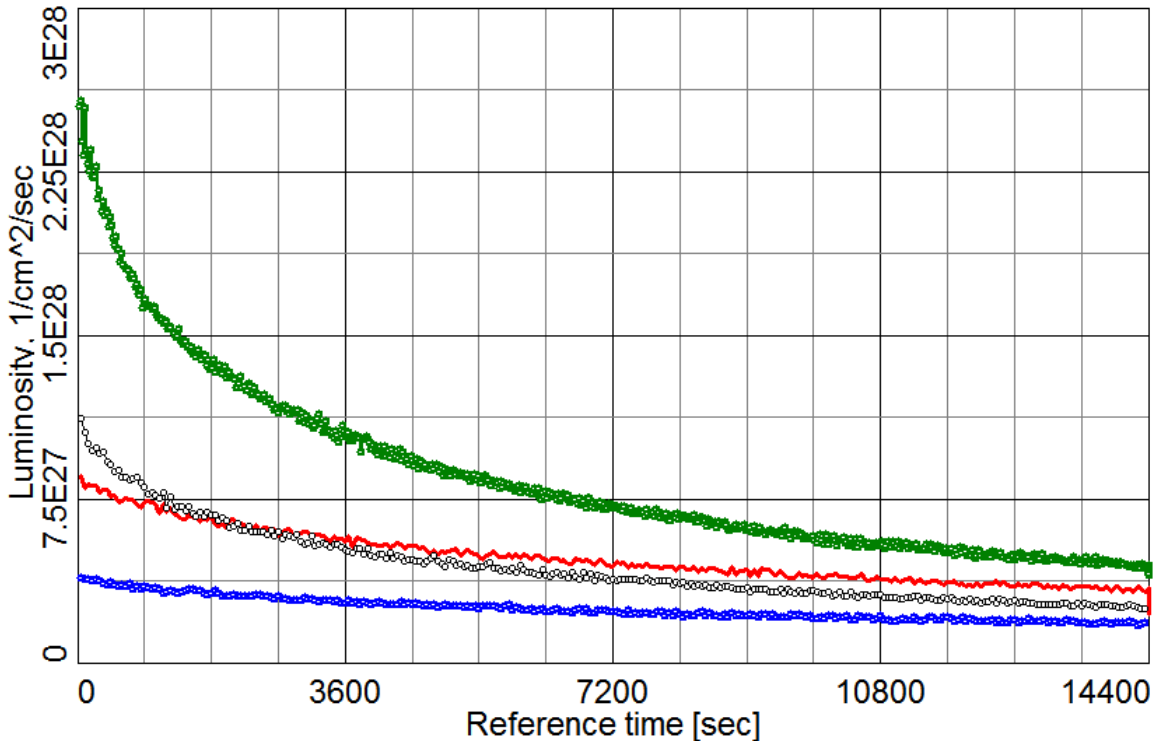

Luminosity of gold ions at 100 GeV/n :

1)green – gold ions bunch intensity $N=1.5\times10^9$, $\varepsilon_x=7.5$ μm (95%, normalized), $\beta^*=0.5$;

2)gray – $N=1.0\times10^9$, initial pre-cooled $\varepsilon_x=7.5$ μm (95%, normalized), $\beta^*=0.5$;

3)red – $N=1.5\times10^9$, $\varepsilon_x=15$ μm (95%, normalized), $\beta^*=0.8$;

4)blue – $N=1\times10^9$, $\varepsilon_x=15$ μm (95%, normalized), $\beta^*=0.8$.

Coherent Electron Cooling

Exciting accelerator science

Great improvement to eRHIC

Can use the R&D ERL for landmark POP experiment

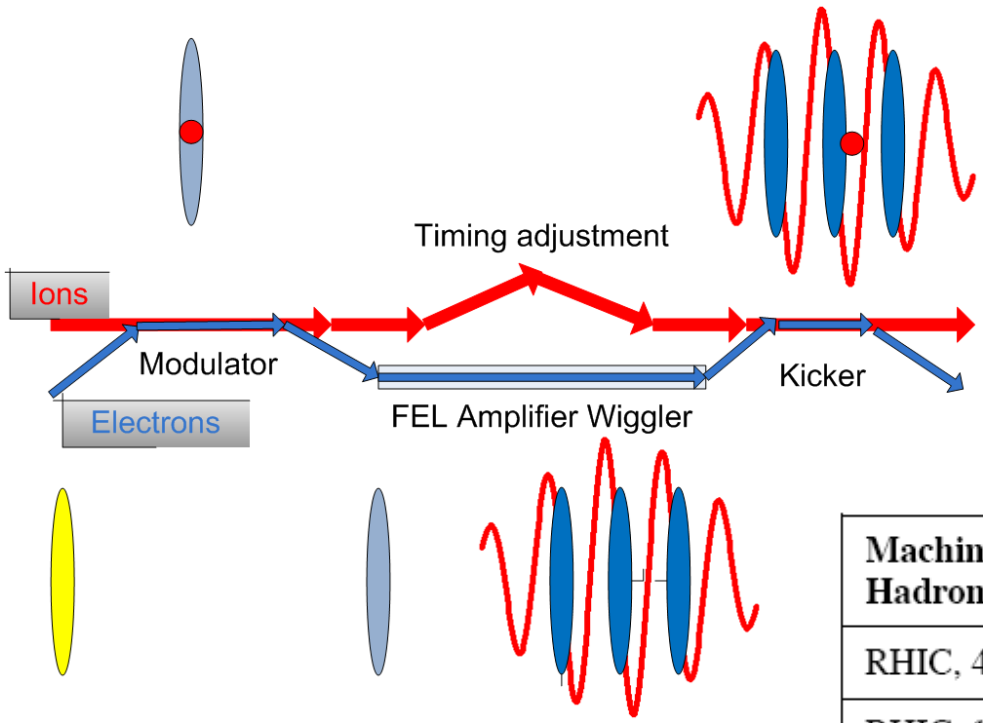

Machine, Energy, Hadrons, GeV/u	λ_o	FEL Length, m	FEL Gain, *amplitude*
RHIC, 40 GeV/n, Au	18 μm	6.5	100
RHIC, 100 GeV, Au, p	3 μm	9	200
RHIC, 250 GeV, p	500 nm	15	100
LHC, 7 TeV, p	10 nm	25	500

Adapted from Litvinenko. Multi-laboratory collaboration

Multi-ampere ERL cavities

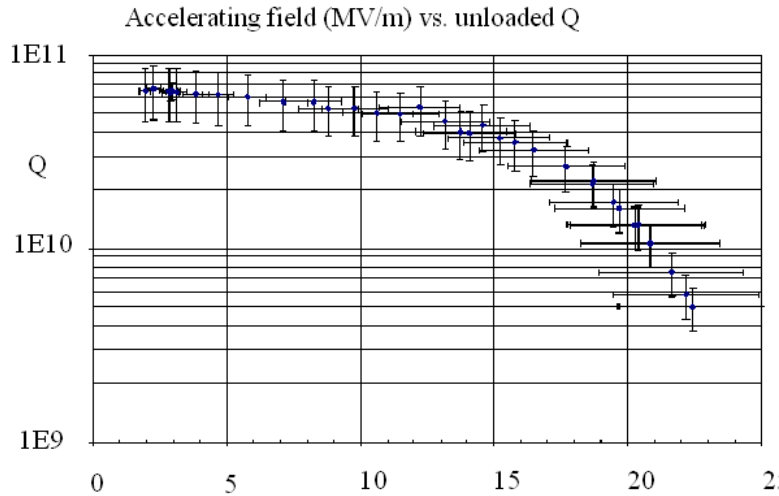

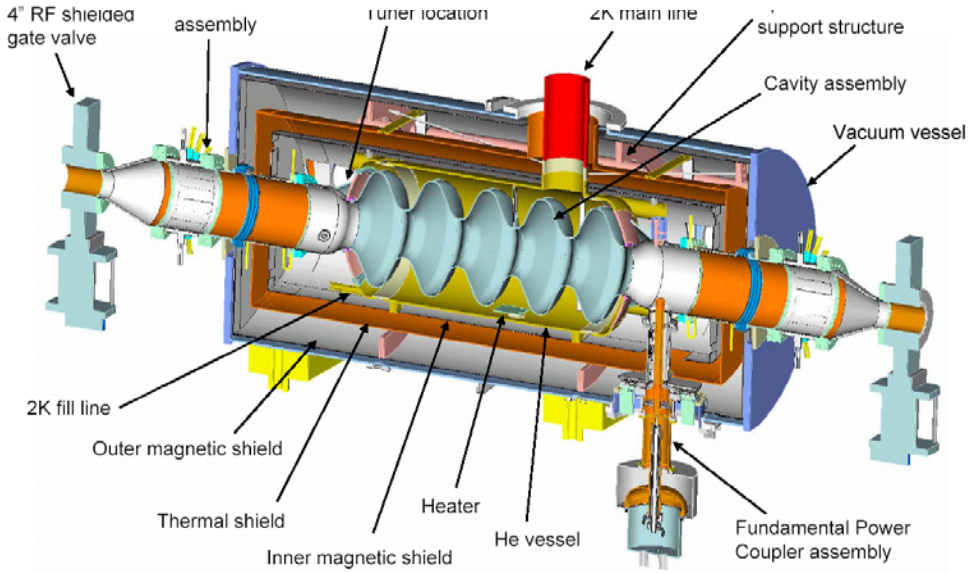

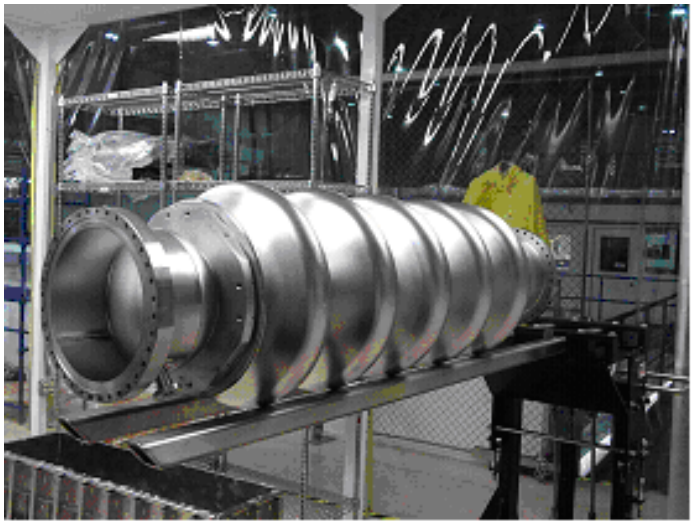

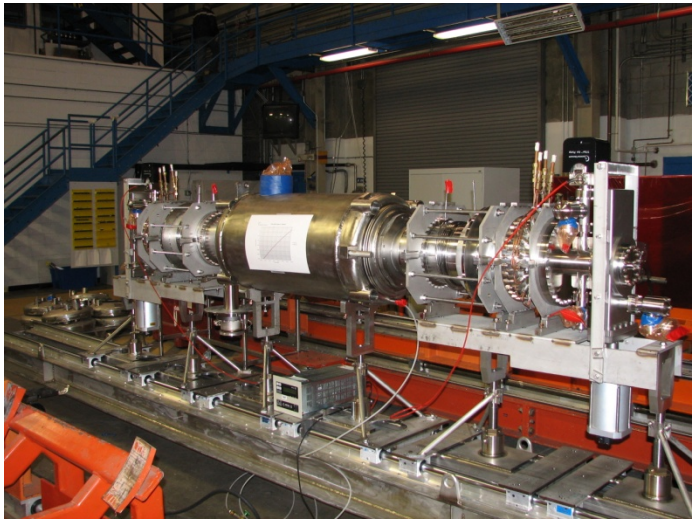

Ampere SRF photo-injector

- Low emittance at high average current is required for FEL.
- The high fields (over 20 MV/m) and large acceleration (2 MV) provide good emittance.
- High current (0.5 ampere) is possible thanks to 1 MW power delivered to the beam.

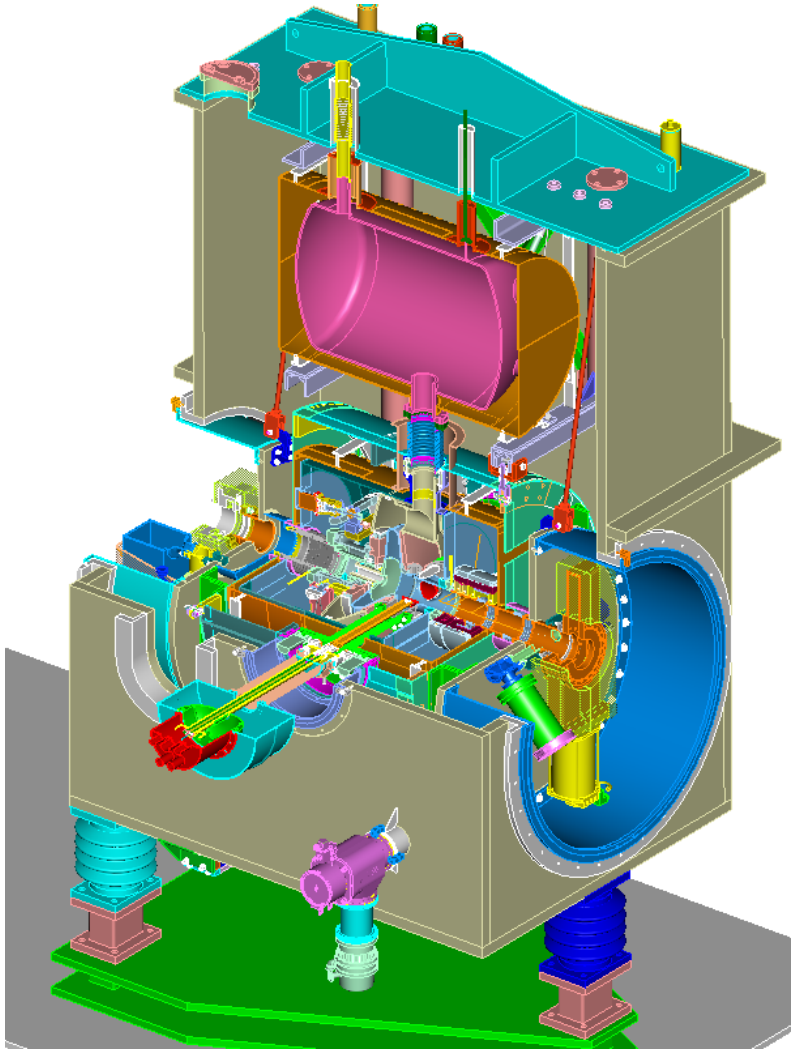

0.5 ampere ERL under construction

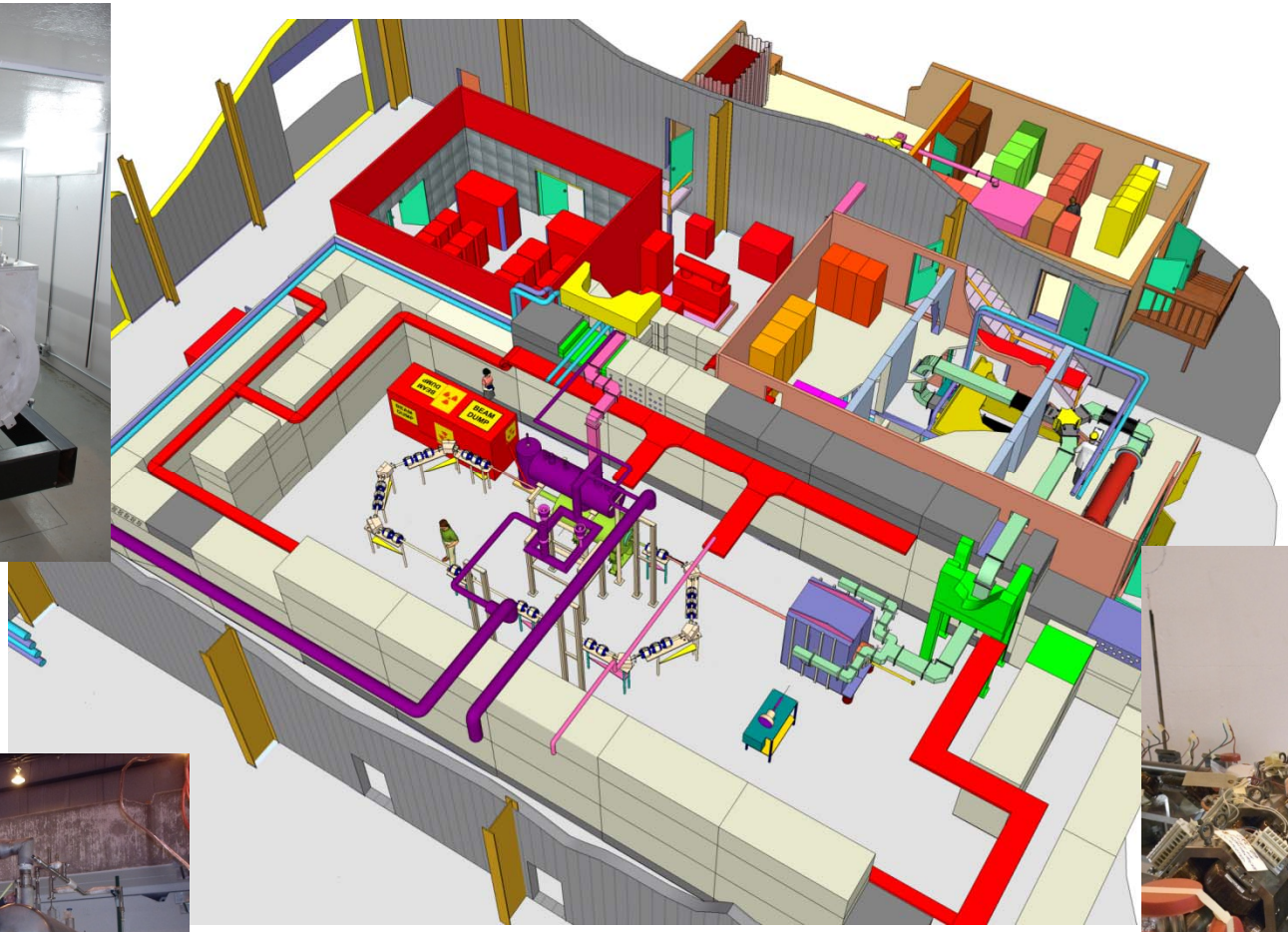

Hi Cheryl:

All documentation-related Actions were addressed in order to submit the Prototype ERL SAD for approval by the DDO, and the ASE for approval by BHSO. Actions completed are:

1.17.1 Drawings were updated
1.17.4 Page 71, Paragraph 1, we now reference 10CFR835.
1.17.5 Page 76, We now mention minor effect on the computed dose rates and doses due to the new 10CFR835 radiation weighting factors on page 71.
1.17.6 Page 91, We mentioned that if the dose rates are > 50 rem/hr, dual chipmunks must be used; now on page 93
1.17.7 Page 115, Section 4.6.8, last line of second paragraph, now reads “the following aspects are examples of significant…” but it is now page 118
1.17.8 Page 127, Second line, Changed “All reasonable” to “All required”, but is now page 129
1.17.9 Page 146, All references to metal recycling have been removed.
1.17.10 Page 198, ASE was checked and made to resemble current ASE template
1.17.11 Page 199, We corrected the numbering of the ASE sentences
1.17.13 Page 215, We removed Table A6-12
2.1.4 Description of configuration of ODH sensor location and capacity of ODH exhaust fans is now on page 99.
2.1.5 10CFR835 neutron radiation weighting factors is addresses on page 71.

I incorporated the many editorial changes submitted by you and the Committee members. I thank you very much for such diligent work. It was truly beyond the normal call of duty and the document reads much better because of your hard work.

The finalized SAD and draft ASE are attached for verification of changes.

Actions 1.17.2, 1.17.3 and 1.17.12 in the minutes can only be done, and will be done, post commissioning after we have control of the beam.

On Action 2.1.3, we will have to wait until the ODH monitors are installed in order to validate the assumption that the ODH exhaust fans start no later than 30 seconds after the oxygen sensors detect 18% oxygen concentration.

I will circulate the draft ASE and final SAD for signatures up to our own ALD. I will also prepare a draft memo for you to send from the LESHC to the DDO outlining the Committee’s request for BNL to approve the Prototype ERL SAD and for the DDO to recommend to BHSO that BHSO approve the ASE.

Regards.

Ed

Prototype Energy Recovery Linac, Building 912

Safety Assessment Document

June 30, 2008

Contributors:

D. Beavis
I. Ben-Zvi
A. Burrill
R. Karol
D. Lederle
E. Lessard
V. Litvinenko
G. Mahler
M. Mapes
G. McIntyre
B. Oerter
D. Phillips
V. Ptitsyn
T. Rao
J. Reich
J. Scaduto
Y. Than
K. Yip
A. Zaltsman

Approval Signatures

E. Lessard, Collider-Accelerator Department Associate Chair for ESSHQ

I. Ben-Zvi, Collider-Accelerator Department Associate Chair for Superconducting Accelerator R&D

D. Lowenstein, Collider-Accelerator Department Chair

S. Vigdor, BNL Associate Laboratory Director, Nuclear and Particle Physics

M. Bebon, Deputy Laboratory Director for Operations

Table of Contents Links

1. Introduction 10

1.1. Scope 10

1.2. Basic Understanding of Prototype ERL Activities 10

1.3. Intentionally-Designed Protection Afforded the Public, Workers and Environment 20

1.4. Codes of Record 21

2. Summary/Conclusions 24

2.1. Results and Conclusions of the Analyses Provided In the SAD 24

2.2. Comprehensiveness of the Safety Analysis and Appropriateness of the ASE 25

2.3. Appropriateness of the Accelerator Safety Envelope 26

3. Site, Facility and Operations Description 27

3.1. Environment Within Which the Prototype ERL is Constructed 27

3.2. Prototype ERL Characteristics Related To Safety 27

3.3. Management Methods Used In Operating the Prototype ERL Accelerator Facility 28

3.4. Design Criteria and As-Built Characteristics of Protoype ERL, Supporting Systems and Components with Safety-Related Functions 35

3.5. Design Features That Exclude or Minimize Exposure to Hazards to As Low As Reasonably Achievable (ALARA) During Operation, Maintenance and Facility Modification 49

3.6. BNL, C-AD and Prototype ERL Organizational Structure 53

3.7. Administrative Controls for Routine Operation and Emergency Conditions..... 54

3.8. Critical Operational Procedures to Prevent or Mitigate Accidents..... 56

3.8.1. Emergency Preparedness 57

3.8.2. Configuration Control..... 57

3.9. Administrative Controls..... 57

3.10. Calibration and Testing..... 57

3.11. Radiological, Worker Safety and Environmental Programs..... 58

3.11.1. Examples of Pollution Prevention and Safety Improvement..... 61

3.12. Records Management 61

3.13. Tests to be Conducted at Prototype ERL..... 63

3.14. Test Equipment Design Criteria and Components Having Safety Functions..... 64

4. Safety Analysis 75

4.1. Identification of Potentially Hazardous Conditions from Radiation Associated With Operation 76

4.1.1. Unshielded Source Radiation Levels..... 81

4.1.2. Maximum Credible Dose Rates on Outside Surface of 48-Inch Concrete Shield..... 84

4.1.3. Maximum Credible Ozone Concentrations in the Prototype ERL Cave 94

4.2. Identification of Potentially Hazardous Conditions from Oxygen Deficiency..... 96

4.3. Identification of Potentially Hazardous Conditions from Electrical Energy..... 100

4.4. Fire Hazards 102

4.5. Industrial Hazards 103

4.6. Hazard Controls 103

4.6.1. Radiation Hazard Controls 104

4.6.1.1. Permanent Shielding and ALARA Dose 105

4.6.1.2. Radiation Detection and Radiation Interlocks 107

4.6.1.3. Control of Radioactive Materials and Sources 109

4.6.1.4. Portable Radiation Monitors 110

4.6.1.5. Personnel Dosimetry 110

4.6.1.6. Access Controls Systems 111

4.6.2. Control and Use of Hazardous Materials 113

4.6.3. Electrical Safety 114

4.6.4. Lockout/Tagout Program 115

4.6.5. Safety Reviews and Committees 115

4.6.6. Training 115

4.6.7. Personal Protective Equipment 116

4.6.8. Significant Environmental Aspects and Impacts 117

4.6.9. Hazard Reduction Associated with Waste Generation and Handling 119

4.6.10. Fire Detection, Egress, Suppression and Response 120

4.6.11. Routine Credible Failures 121

4.7. Evaluation of Potential Impacts to Workers, Public and Environment 122

4.8. Selection of Control Measures that Reduce Risks to Acceptable Levels 123

4.9. Listing of All Credited Engineered and Administrative Controls 124

4.10. Description of the Maximum Credible Incident 125

4.10.1. Maximum Credible Fire Incident 125

4.10.2. Maximum Credible Electrical Accident 128

4.10.3. Risk Assessment to Workers, the Public and the Environment 129

4.10.3.1. Radiation Risks 129

4.10.3.2. Environmental Risks from Radiation 130

4.10.3.3. Fire Risks 130

4.10.3.4. Electrical Risks 131

4.10.4. Professional Judgment Issues 131

4.10.5. Methods Used in Evaluation of Radiological Hazards 132

5. Basis for Accelerator Safety Envelope 133

5.1. Connection between Engineered and Administrative Bounding Conditions and ASE ... 136

5.2. ASE Consideration for Routine and Non-Routine Operating Conditions 138

6. Quality Assurance 139

6.1. The Ten Management, Performance and Assessment Criteria of DOE O 414.1C 139

6.2. Quality Assurance (QA) Program at Prototype ERL 139

6.3. QA Activities That Impact Protection of Worker, Public or Environment 141

6.3.1. Personnel Training and Qualifications 141

6.3.2. Quality Improvement 142

6.3.3. Documents and Records 143

6.3.4. Work Process 144

6.4. QA Activities That Impact Accelerator Maintenance and Operations 145

6.4.1. Design 145

6.4.2. Procurement 146

6.4.3. Inspection and Acceptance Testing 147

6.5. Management Assessment 148

6.6. Independent Assessment 149

7. Post-Operations Planning 151

7.1. Structural and Internal Features that Facilitate Future Decommissioning/Dismantling.. 151

7.2. Operations Considerations to Minimize the Generation of Radiological and/or Hazardous Materials 152

7.3. Long-Term Records Management to Facilitate Post-Operations Activities 154

7.4. Waste Management of Radiological and Hazardous Material Generation During Post Operations Period 155

8. References/Glossary/Acronyms 156

8.1. List of Documents that Provided Supporting Information for the SAD 156

8.1.1. Accelerator Safety Implementation Guide for DOE O 420.2, Safety Of Accelerator Facilities, Office of Science, Department of Energy, May 1999. 156

8.1.2. Accelerator Safety Subject Area 156

8.1.3. C-AD Conduct of Operations Matrix 156

8.1.4. C-AD Fire Hazards Analyses 156

8.1.5. OPM for C-AD 156

8.1.6. Radiological Control Manual..... 156

8.2. List of Acronyms 156

Appendix Links

Appendix 1, Shielding Analyses - 162

Appendix 2, ODH Calculations - 190

Appendix 3, C-AD Shielding Policy - 199

Appendix 4, Accelerator Safety Envelope -201

Appendix 5, Fault Study Results - 208

Appendix 6, Qualitative Risk Assessments - 209

Appendix 7, Cooling Water Activation - 222

Appendix 8 Air Activation - 225

Figure Links

Figure 1.2.a Prototype ERL General Layout Inside Building 912 11

Figure 1.2.b Drawing of Prototype ERL in Building 912..... 12

Figure 1.2.c Drawing of Prototype ERL Enclosure and Ring 13

Figure 1.2.d Drawing of Prototype ERL Laser, Klystron and Power Supply Rooms 14

Figure 1.2.e Drawing of Prototype ERL Control Area and Nitrogen Storage Tank 15

Figure 1.2.f Drawing of Prototype ERL Second Floor Level..... 16

Figure 1.2.g Drawing of Prototype ERL Cooling Water Skid and Cryogenic Helium Recovery Areas 17

Figure 1.2.h Drawing of Prototype ERL Helium Compressor Room..... 18

Figure 3.3.a Operations Programs for ESSHQ at C-AD 32

Figure 3.6 Prototype ERL Operations Organization..... 54

Figure 3.14.1.a Prototype ERL Fire Protection System..... 70

Figure 3.14.1.b Prototype ERL Klystron Lead Shield Layout 73

Figure 3.14.1.c Prototype ERL General Shield Layout 74

Figure 7.2 Prototype ERL Cooling Water Process Flow Diagram..... 153

Table Links

Table 3.4 Estimated Prototype ERL Cooling Water Heat Loads, Temperatures, Pressures - 48

Table 4.1 Parameters of the Prototype ERL in Building 912 - 80

Table 4.1.2.a Dose Outside of Prototype ERL Cave for 3.5 and 25 MeV Electrons - 86

Table 4.1.2.b Skyshine Dose Rate Estimates from 25 MeV Beam Loss - 88

Table 4.1.2.c Estimated Maximum Dose Rates and Fault Dose to Worker Near Penetrations - 93

Table 4.2 Potential ODH Areas at ERL - 99

Table 4.9.a Summary of Credited Engineered Controls - 124

Table 4.9.b Summary of Credited Administrative Controls - 125

1. Introduction

1.1. Scope

This document presents a basic understanding of the mission associated with the Prototype Energy Recovery Linac (ERL) in Building 912, the protections that are afforded the public and the workers' health and safety, and the protection of the environment from radiological hazards associated with electrons.

1.2. Basic Understanding of Prototype ERL Activities

The mission associated with the Prototype ERL in Building 912 is to study the requirements for an electron accelerator that may later be used to increase the performance of the Relativistic Heavy Ion Collider (RHIC). Figures 1.2.a through 1.2.h show the general layout and the plan views of functional areas at the Prototype ERL.

Figure 1.2.a Prototype ERL General Layout Inside Building 912

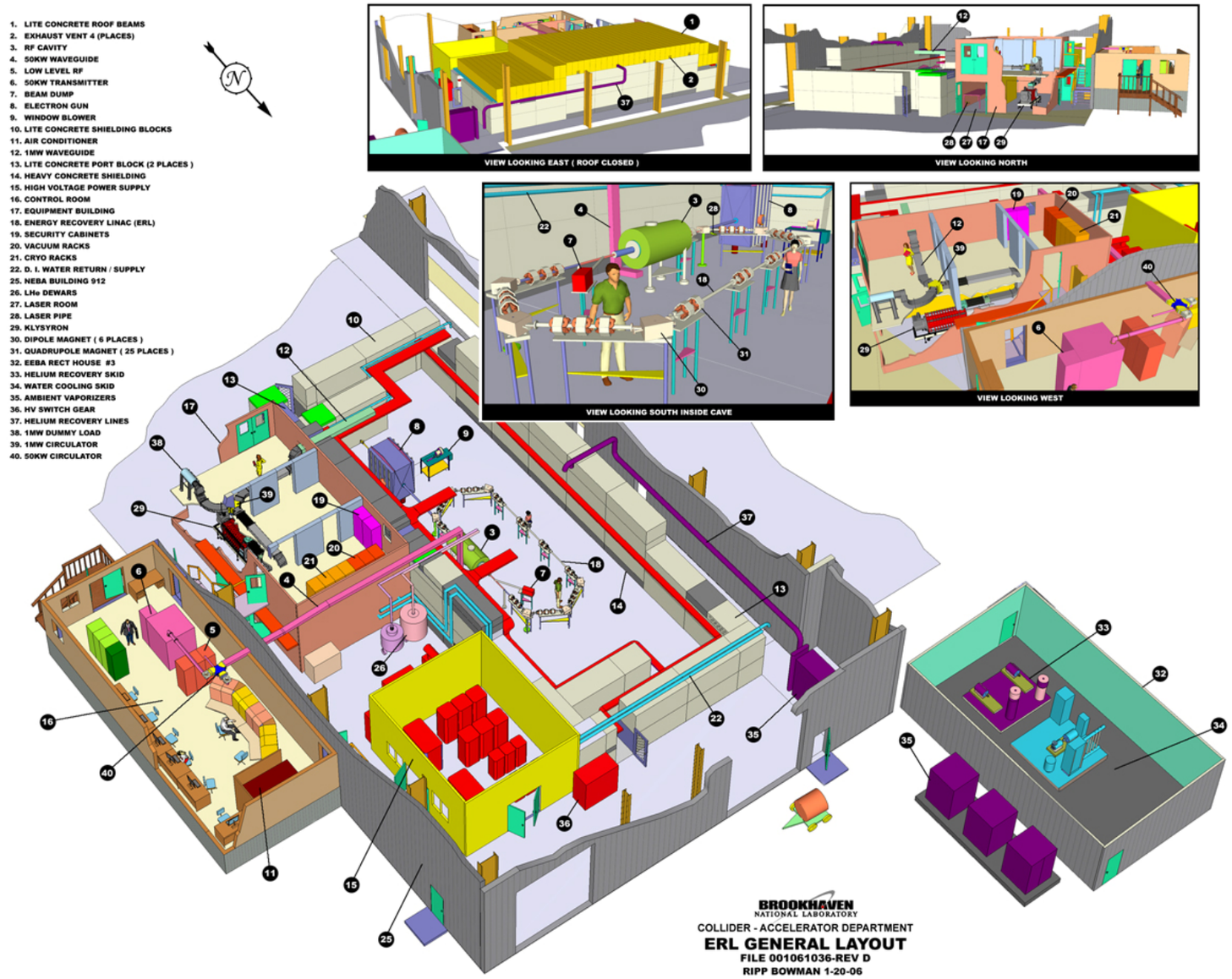

Figure 1.2.b Drawing of Prototype ERL in Building 912

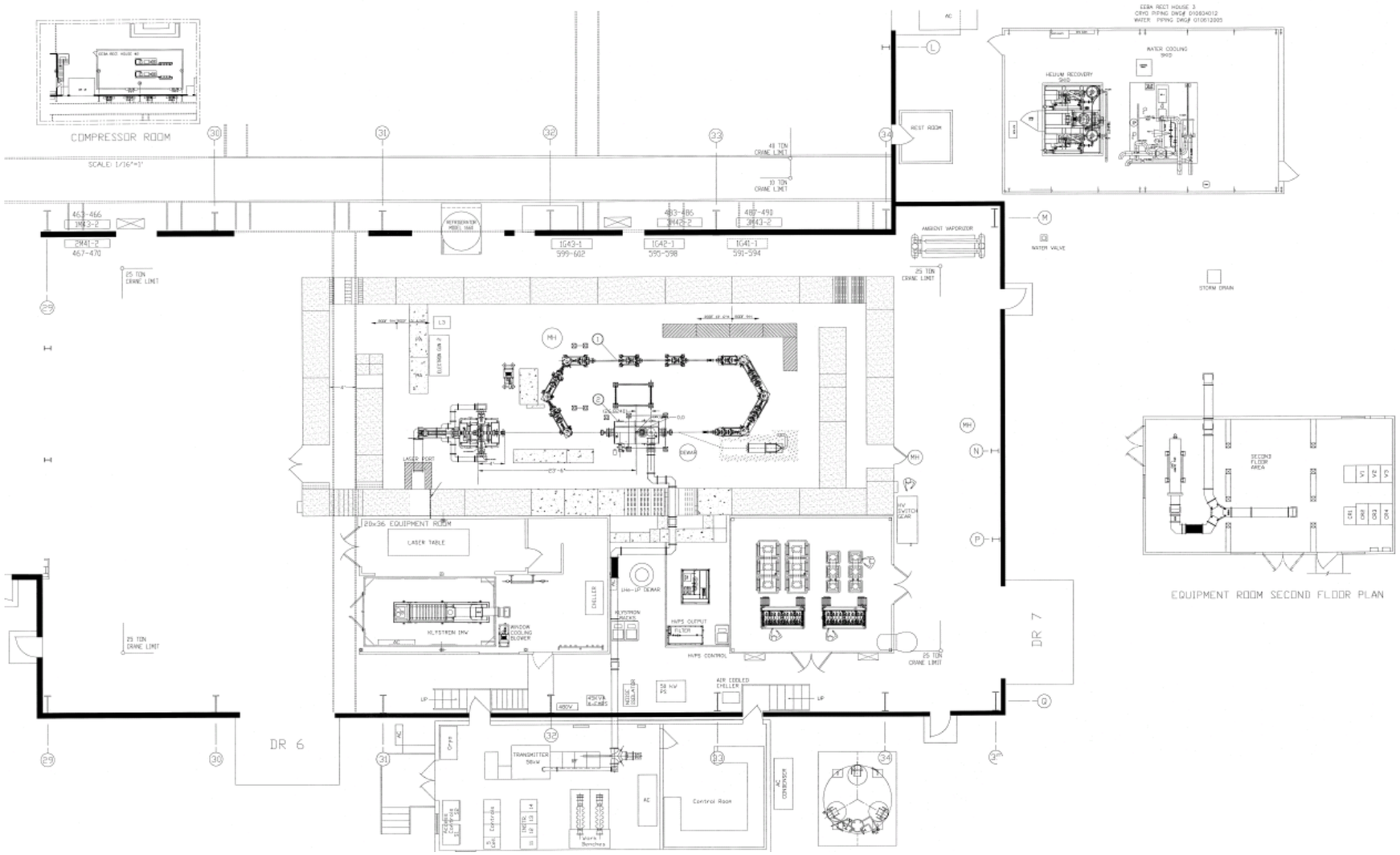

Figure 1.2.c Drawing of Prototype ERL Enclosure and Ring

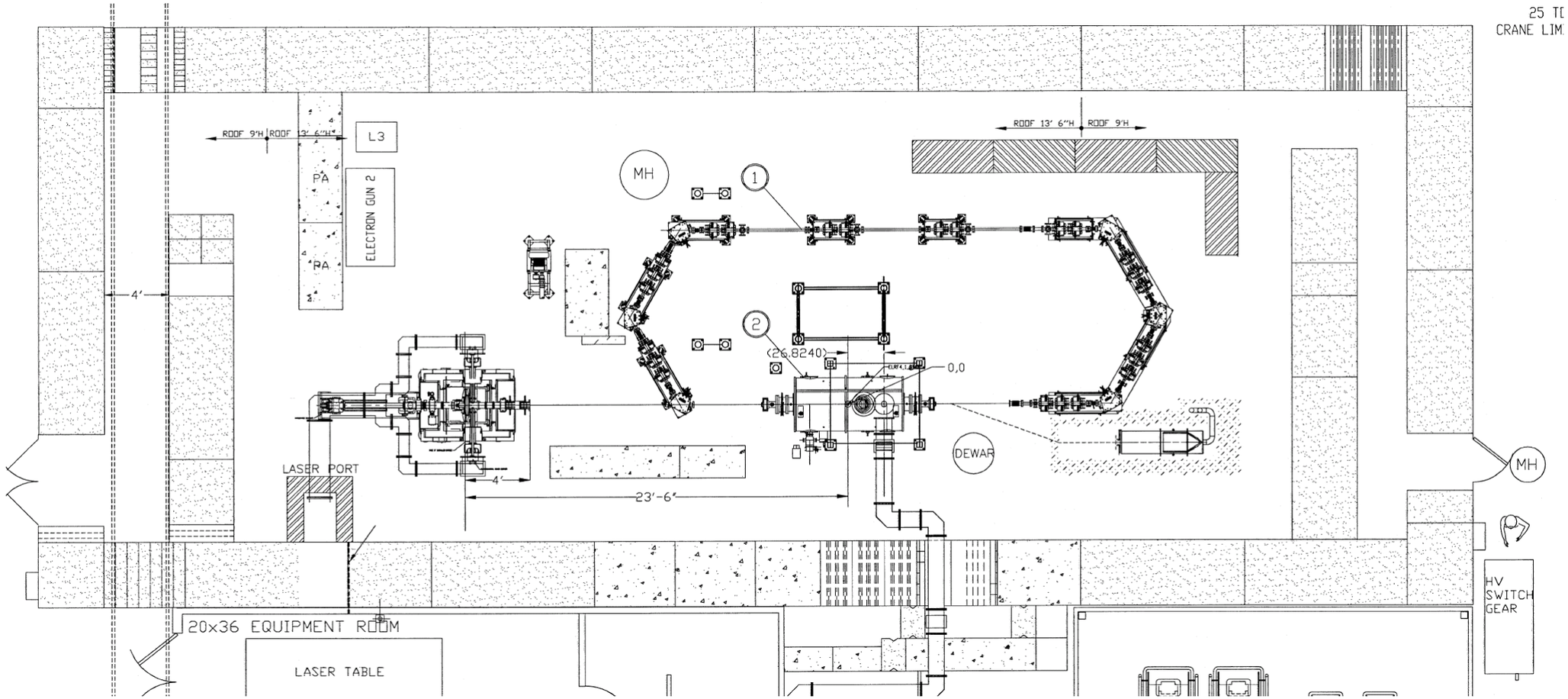

Figure 1.2.d Drawing of Prototype ERL Laser, Klystron and Power Supply Rooms

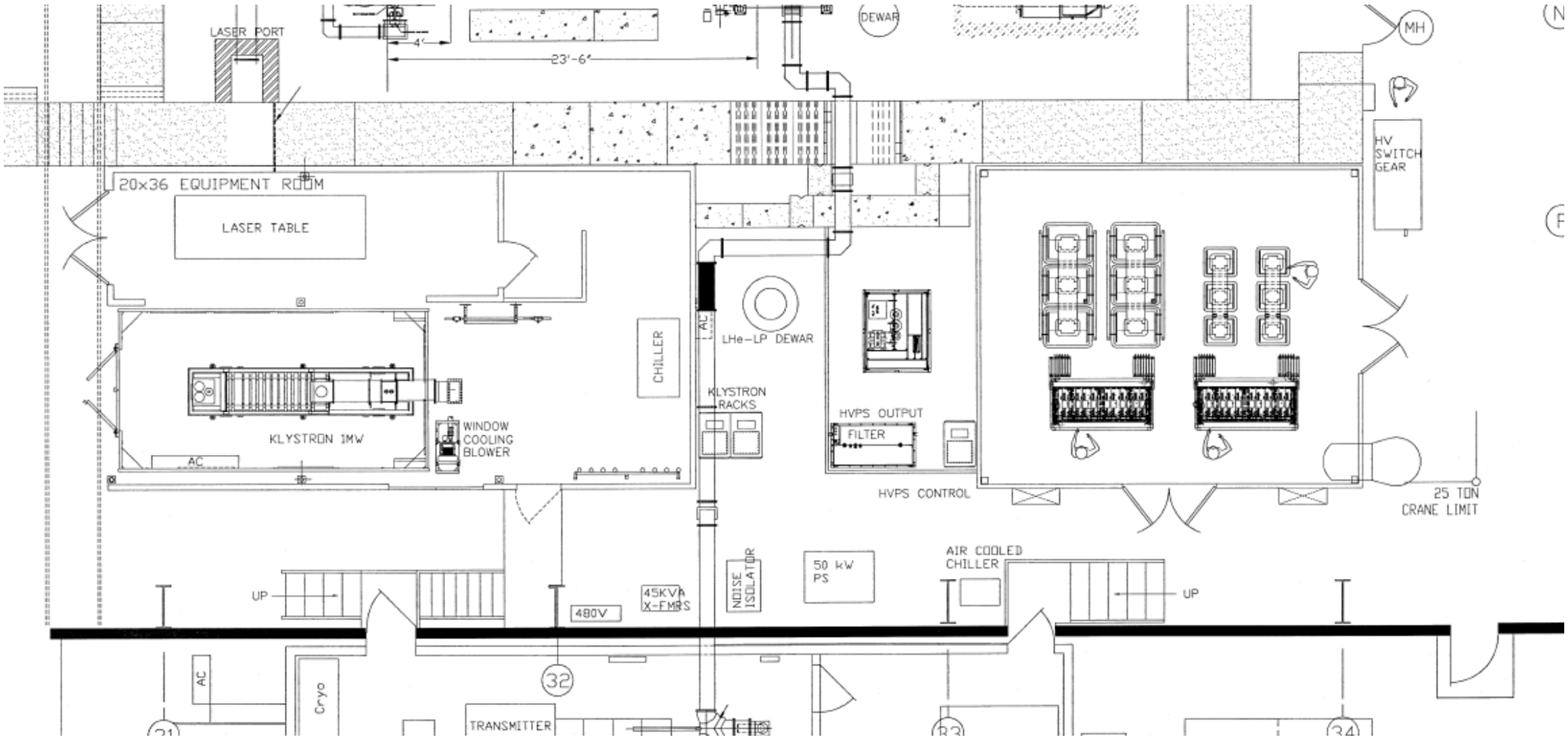

Figure 1.2.e Drawing of Prototype ERL Control Area and Nitrogen Storage Tank

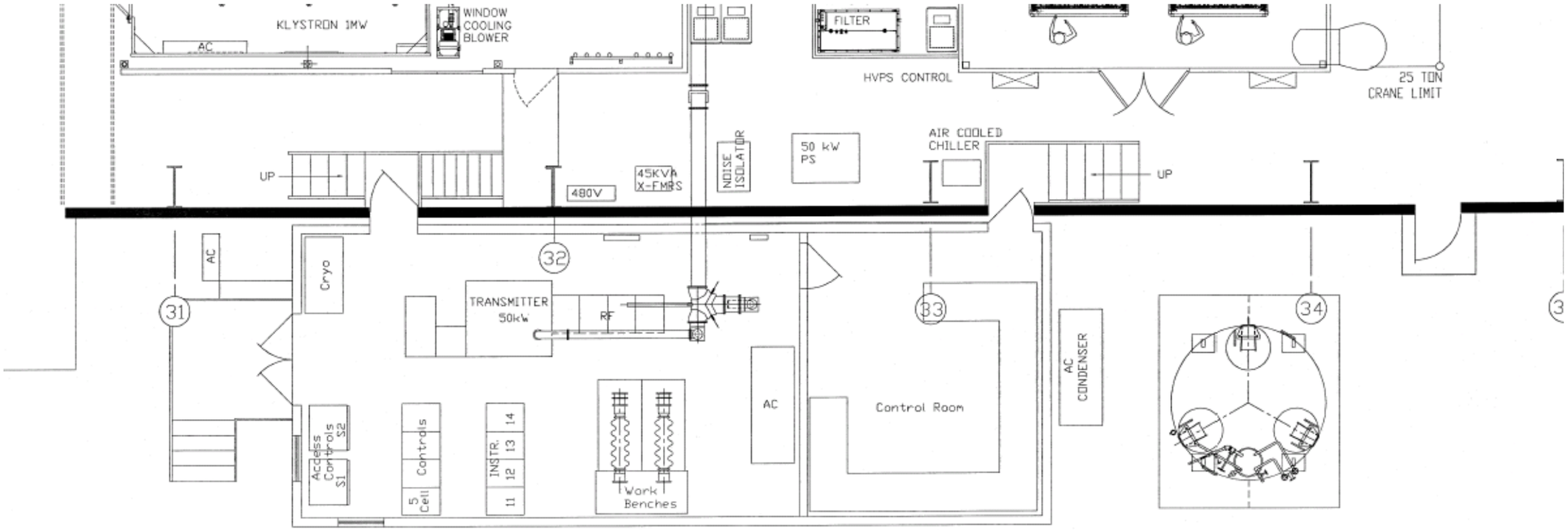

Figure 1.2.f Drawing of Prototype ERL Second Floor Level

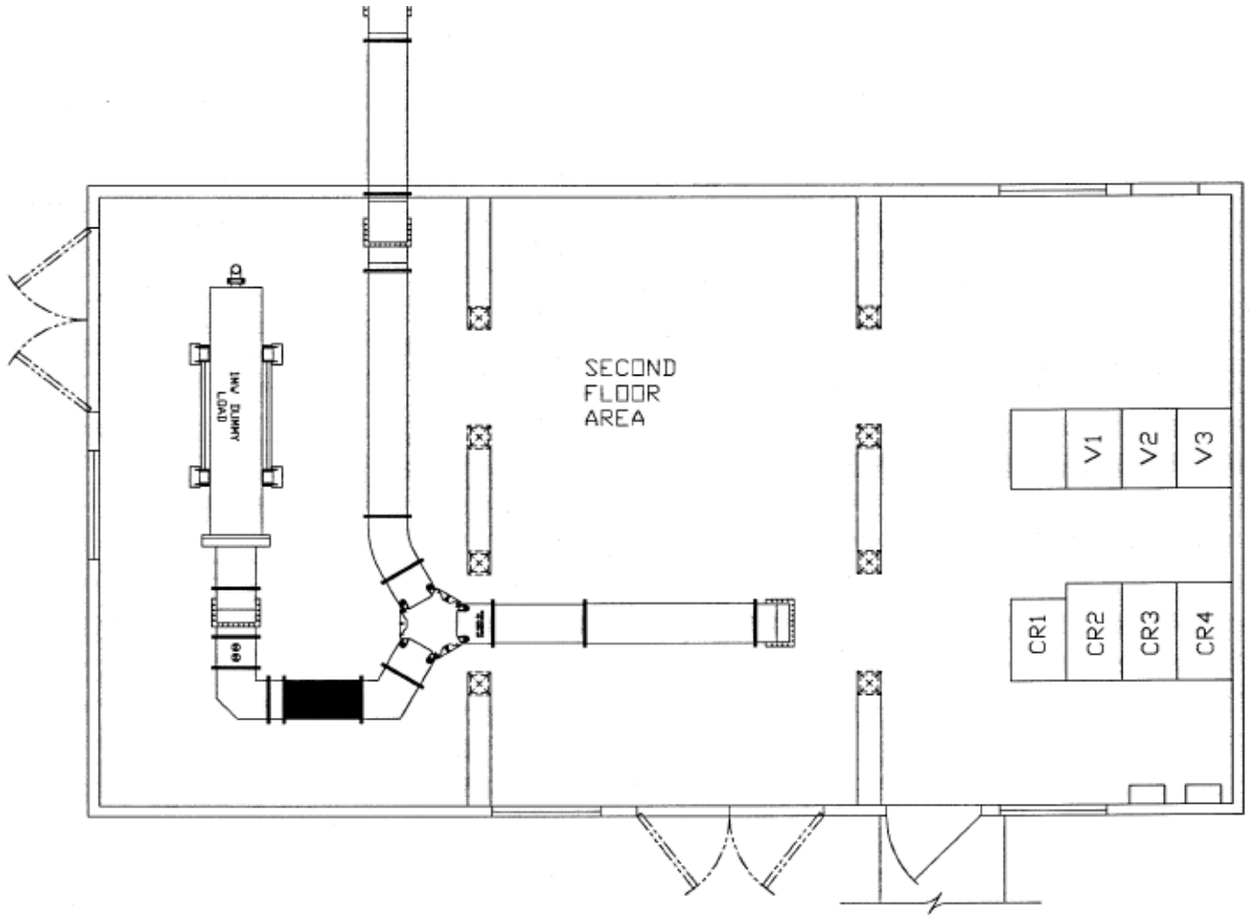

Figure 1.2.g Drawing of Prototype ERL Cooling Water Skid and Cryogenic Helium Recovery Areas

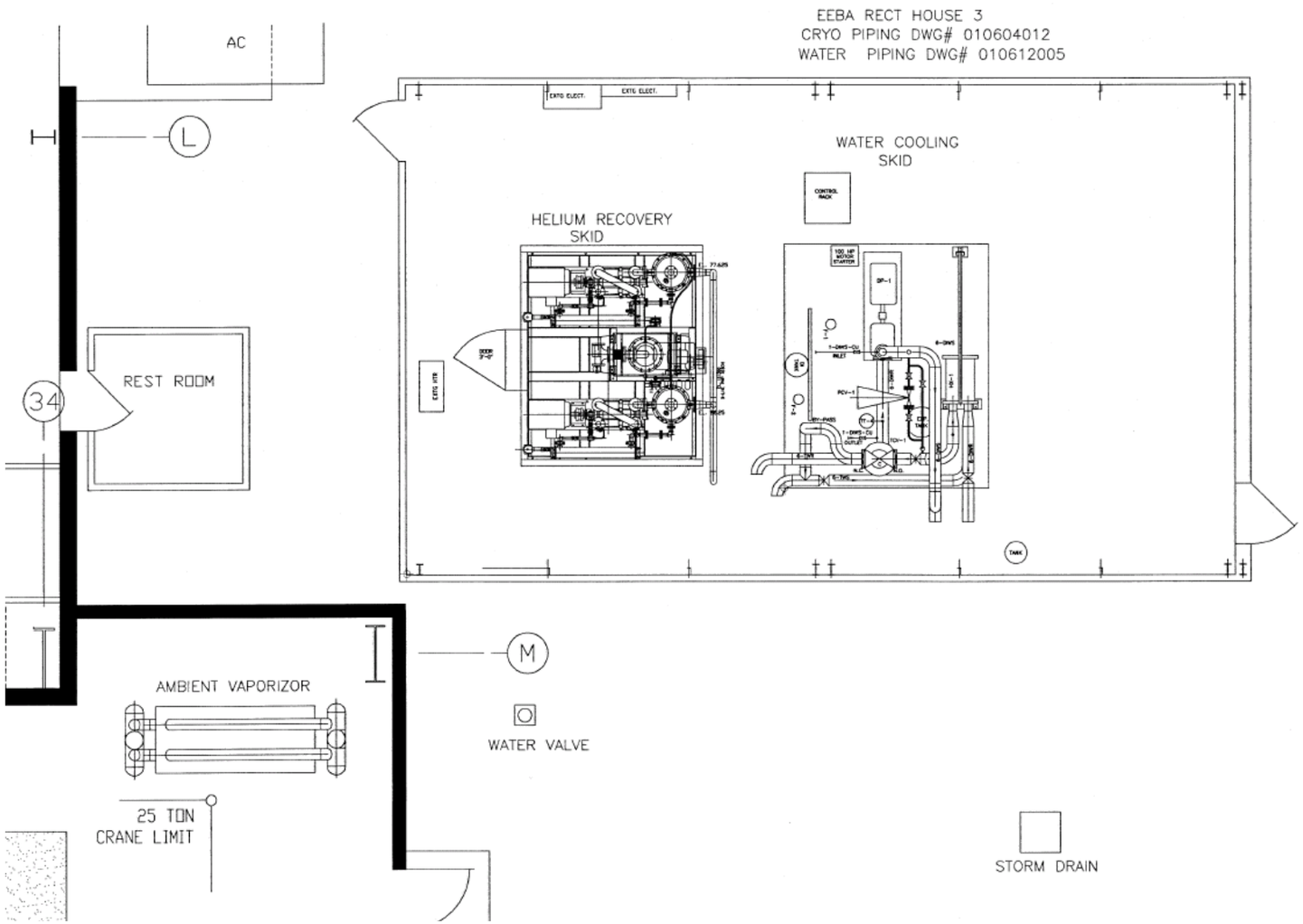

Figure 1.2.h Drawing of Prototype ERL Helium Compressor Room

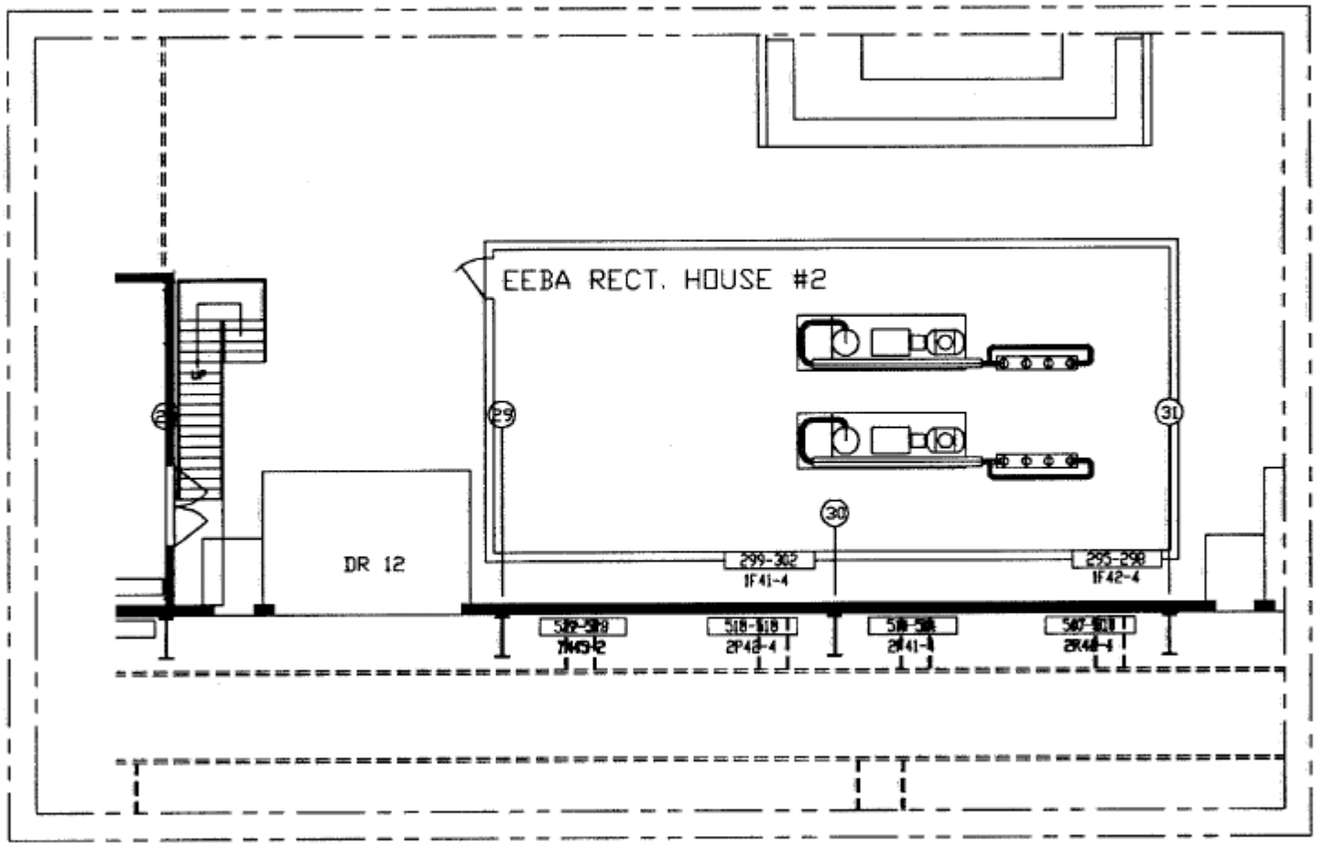

In RHIC, the ion-beam bunch size can be further reduced to maximize luminosity[1] at the intersecting regions. Reduction of the energy of the motion of a bunch, and thus reduction of the size of a bunch, is termed "cooling." Cooling requires some friction force, and the friction force must be added. The most common methods are stochastic cooling and electron cooling. Electron cooling is the method to be studied with the Prototype ERL. This type of cooling will eventually be used to reduce the beam size in the RHIC ion storage rings. "Cold" electrons will be used to cool the "hot" ion beam. The result of cooling is a smaller beam size and a higher particle density, which leads to greater luminosity. It is estimated that increases in luminosity by a factor 10 will be achievable using electron cooling. Thus, collisions would occur at 10 times the present rate enabling physics processes to be studied that would otherwise be unachievable due to the practical constraint of time.

Electron cooling has been used in many ion rings before. However, the implementation of electron cooling in RHIC is more complicated than any existing cooler. RHIC's high beam energy requires electron energy of 55 MeV. While other coolers use a DC electron beam, the only way to make a cooling beam with 55 MeV is with a superconducting ERL. In order to verify out the eventual RHIC ERL design, the Collider-Accelerator Department (C-AD) built a smaller prototype of the ERL in Building 912. This Prototype ERL in Building 912 generates and accelerates an intense, 100 mA or greater, electron beam with energy up to about 25 MeV. The energy recovery aspect is due to the fact that the electron beam decelerates to few MeV

[1] Luminosity is expressed in units of $cm^{-2}\ s^{-1}$ or $b^{-1}\ s^{-1}$. Luminosity is an important quantity that characterizes performance. For RHIC, luminosity is directly proportional to the revolution frequency, the number of bunches in one beam, the number of particles in each bunch in yellow ring, and the number of particles in each bunch in the blue ring, and it is inversely proportional to the cross sectional area of the bunches. If the number of particles crossing each direction per unit time remains unchanged, then smaller bunch cross-sectional-area leads to greater luminosity.

before being dumped, and most of its kinetic energy is recovered in an RF field. The overall plan is to test the concepts and stability criteria for very high current ERLs to be used at RHIC.

A brief description of the prototype system is as follows: An electron beam is created in a photo-cathode RF gun. At the exit of the gun, the electron energy is planned to be about 3.5 MeV. The beam is injected into a superconducting RF cavity, and accelerated up to 25 MeV. The beam is then passed through a "ring" and again enters the RF cavity. The beam passes into the RF cavity with a 180 degree phase shift relative to the accelerating phase of the cavity and the beam is therefore decelerated. With beam energy reduced to electron gun injection energy (3.5 MeV), a dipole magnet deflects the circulating beam into the beam dump.

1.3. Intentionally-Designed Protection Afforded the Public, Workers and Environment

Engineered controls include the Access Control System, fire-protection system, fixed-location interlocking area-radiation monitors and ionizing-radiation shielding. Administrative controls include posting, fencing, training and qualifications for radiation workers and visitors. Additional administrative controls include personnel dosimeters, Radiation Work Permits and As Low As Reasonably Achievable (ALARA) reviews of jobs and experiments when needed.

Radiation surveys using portable radiation monitors are used to verify the radiological controls at Prototype ERL on a regular basis. The limit on the beam in the Prototype ERL is such that exposure to individuals in Controlled Areas and in uncontrolled areas is designed to be less than the annual Brookhaven National Laboratory (BNL) dose limits that are listed in the

Accelerator Safety Envelope (ASE). Specific Prototype ERL beam limits are reviewed by the C-AD Radiation Safety Committee (RSC) before operations, and are also listed in the ASE.

The C-AD has embraced BNL's Integrated Safety Management System (ISM) as a basic protection for workers and experimenters. In order to guide operations and maintenance of the accelerator and associated systems at the Department level, an administrative control based on ISM and termed "Work Planning and Control" is used.

The BNL dose limits were derived from the administrative and engineered controls listed in 10CFR835 "Occupational Radiation Protection" and DOE Order 5400.5 "Radiation Protection of the Public and the Environment," which establish radiation protection standards, limits and program requirements for protecting employees and the public from ionizing radiation resulting from the conduct of DOE activities. These requirements are promulgated downward into BNL's RadCon Manual, and further into Departmental-level authorization documents and procedures.

1.4. Codes of Record

The following requirements are relevant to the Prototype ERL and are used to establish safety for the workers and the public:

- Design Codes
  - National Fire Protection Association (NFPA) 70, ''National Electrical Code'' (2005)

  - NFPA 70E, ‘‘Standard for Electrical Safety in the Workplace’’ (2004)
  - American Society of Mechanical Engineers (ASME) Boilers and Pressure Vessel Code, sections II, V, VIII, IX and X. including applicable Code Cases (2004)
  - ASME B31 (ASME Code for Pressure Piping) as follows:
    - B31.3—2002—Process Piping (as applicable to the cryogenic system)
    - B31.9—1996—Building Services Piping (as applicable to the water cooling system)
- Consensus Safety Standards
  - ANSI Z136.1, ‘‘Safe Use of Lasers’’ (2000)
  - ANSI Z49.1, ‘‘Safety in Welding, Cutting and Allied Processes,’’ sections 4.3 and E4.3 (1999)
  - American Conference of Governmental Industrial Hygienists, ‘‘Threshold Limit Values for Chemical Substances and Physical Agents and Biological Exposure Indices’’ (2005)
- Federal Regulations
  - 10CFR835, Occupational Radiation Protection
  - 10CFR851, Worker Safety and Health Program
- DOE Orders
  - DOE Order 420.2B, Accelerator Safety
  - DOE Order 420.1A, Facility Safety, §§ 4.2 and 4.4
  - DOE Order 414.1C, Quality Assurance
  - DOE Order 5480.19, Conduct of Operations
  - DOE Order 5400.5, Radiation Protection of the Public and the Environment

- DOE Order 450.5, Environmental Protection Program
- DOE Order 435.1, Radioactive Waste Management
- DOE Order 243.1, Records Management Program
- DOE STD-1020-2002, Natural Phenomena Hazards Design And Evaluation Criteria For Department Of Energy Facilities

2. Summary/Conclusions

2.1. Results and Conclusions of the Analyses Provided In the SAD

The Prototype ERL accelerator is a facility with negligible offsite impacts, with extractable beam that goes to a beam dump, two points of entry, one enclosure, multiple operators/users, and multiple active safety systems. In addition to being able to create radiation levels above 5 mrem/h, unique non-radiation hazards such as potential for oxygen deficiency (ODH) exist.

It is concluded that this accelerator is subject to DOE O 420.2B Accelerator Safety, and an ASE for routine operations must be approved at the local DOE site office.[2] Additionally, according to Table 1 in the DOE Accelerator Safety Order Guide, the Safety Assessment Document and the ASE are to be tailored, as needed, to address workplace/onsite hazards and demonstrate no more than negligible offsite impacts. These requirements are promulgated in BNL's Standards Based Management System (SBMS) Accelerator Safety Subject Area.

Offsite impacts or major on-site impacts are "negligible" due to the physical aspects of the Prototype ERL whereby it is dependent upon an external energy source; that is, electric power that can be easily terminated. The primary hazard is prompt ionizing radiation that is limited to regions where the beam is maintained and is in existence only when a beam is present.

[2] DOE Guide 420.2-1, 7-1-05, Table 1. Tailoring of Accelerator Safety Order Requirements

2.2. Comprehensiveness of the Safety Analysis and Appropriateness of the ASE

The Safety Assessment Document (SAD) for Prototype ERL areas is consistent with DOE Orders. The format for this SAD closely follows the prescription for an SAD given in the DOE Guide 420.2-1.

The smoke and heat detection system, the ODH system and the access control system are identified as personnel-safety significant. The sprinkler protection system is designed to protect equipment to ensure timely continuity of the research in the event of a fire.

The shielding policy is clearly stated (see Appendix 3, C-AD Shielding Policy). Optimization methods are used to assure that occupational exposure is maintained ALARA in developing and justifying facility design and physical controls. Models used for dose rate predictions are described in the SAD and are verified against actual measurements.

Significant occupational safety and health aspects and environmental aspects are identified and adequate controls are described.

The SAD clearly identifies the safety and health aspects of all portions of the facility including the accelerator itself, beam transport components and the support facilities. The organizational structure and Environment, Safety, Security, Health and Quality (ESSHQ) programs for commissioning and operating the Prototype ERL are adequately described.

2.3. Appropriateness of the Accelerator Safety Envelope

On the basis of the safety analysis documented in Chapter 4 of the Prototype ERL SAD, associated risk assessment forms in Appendix 6, and the negligible environmental impact of this facility, the ASE conforms to requirements set forth in the BNL SBMS Subject Area, Accelerator Safety.

3. Site, Facility and Operations Description

3.1. Environment Within Which the Prototype ERL is Constructed

The accelerator site location is characterized in the following paragraphs. Information addresses adjacent facilities that may impact Prototype ERL safety or operations. The treatment of site geography, seismology, meteorology, hydrogeology, and demography would be duplicative of analyses performed in compliance with National Environmental Policy Act (NEPA) documents and the C-AD SAD.[3] Thus, it is not repeated here.

3.2. Prototype ERL Characteristics Related To Safety

The specific Prototype ERL characteristics related to safety include:

- A formal conduct of operations program that uses procedures, work planning and authorizations for all work
- Safety features and safety markings on equipment (e.g., pressure relief valves, burst disks, ground-fault alarms, ventilation, Underwriters Laboratories (UL) marks, American Society of Mechanical Engineers (ASME) code stamps, etc.)
- Safety limits and safety envelopes for routine operations
- Access to hazardous enclosures using interlocks for non-ionizing and ionizing radiation protection
- Access to hazardous enclosures using Kirk Locks and Lockout/Tagout (LOTO) for electrical protection

[3] C-AD Safety Assessment Document, http://www.rhichome.bnl.gov/AGS/Accel/SND/c-a_sad_and_ase.htm

- Radiation shielding to control routine and fault levels of ionizing radiation
- Magnetic field shielding and warnings to protect workers who have medical implants
- Configuration controls for Prototype ERL drawings and equipment locations
- Formal design reviews and formal safety reviews for either new equipment or modifications to existing equipment
- Containment of non-ionizing radiation, such as laser and RF, within enclosures
- Continuous monitoring and alarms for fire, smoke, ODH, water leaks and ionizing radiation
- Certified hoists, cranes and rigging equipment
- Materials, welds, welding inspections, and pressure tests for pressurized equipment that meets pressure safety requirements in 10CFR851
- Trained and qualified staff for accelerator operations and maintenance activities
- Testing and calibration of safety related equipment and monitors

These characteristics that are related to safety are described in more detail in the sections that follow.

3.3. Management Methods Used In Operating the Prototype ERL Accelerator Facility

The C-AD is administered and organized to assure safe operation in accomplishing its mission. Its mission is to:

- Excel in environmental responsibility and safety in all department operations
- Develop, improve and operate the suite of accelerators used to carry out the program of accelerator-based experiments at BNL

- Support the experimental program including design, construction and operation of the beam transports to the experiments plus partial support of detector and research needs of the experiments
- Design and construct new accelerator facilities in support of the BNL and national missions.

In meeting its mission, the C-AD is under a formal Conduct of Operations Agreement with the Department of Energy.[4] The documentation that is used to comply with this agreement is the C-AD Operations Procedure Manual, called the Collider-Accelerator OPM, which specifies key procedures, chain of command, authorized personnel and other operational aspects.[5] Because it is capable of stand-alone operations, the Prototype ERL has a supplemental Conduct of Operations Agreement.[6] To take advantage of existing C-AD practices and systems, Prototype ERL procedures are in the C-AD OPM. The management that is used to assure that Prototype ERL personnel are qualified in safe operations is the C-AD management.[7] Prototype ERL operations personnel are qualified via a training program, including formal examinations, to certify operational qualifications where appropriate.

Only authorized Department personnel operate the Prototype ERL.[8] Direct daily supervision of shift operations is the responsibility of the on-duty Prototype ERL Operator in Charge. All Operators are authorized to shut down the Prototype ERL whenever an unsafe condition arises, or whenever they think that continued operation is not clearly safe. They are also authorized to take any other corrective safety- or environmental-protection-action as

[4] http://www.rhichome.bnl.gov/AGS/Accel/SND/conductofops.htm Conduct of Operations Agreements
[5] http://www.rhichome.bnl.gov/AGS/Accel/SND/procedures.htm Operations Procedure Manual
[6] Prototype ERL Conduct of Operations Agreement
[7] http://www.rhichome.bnl.gov/AGS/Accel/SND/OrgChart/OrgChart.pdf, see Chair's box on chart.
[8] http://www.rhichome.bnl.gov/AGS/Accel/SND/OPM/opm_chapter_1.htm, see OPM 1.1.

indicated in the Collider-Accelerator OPM. All scheduled operational-related maintenance is done with the authorization of the Prototype ERL Operations Supervisor and the C-AD Maintenance Coordinator, with the work-control authorizations prescribed in the Collider-Accelerator OPM and with the knowledge of the on-duty Prototype ERL Operator in Charge.

The role, responsibility, accountability and authority statements (R2A2s) establish the expectations and duties of Prototype ERL managers and staff for carrying out the work consistent with external and internal requirements.[9]

Subject Areas are BNL documents that contain basic requirements and guidelines that apply to a broad group of staff across BNL.[10] Subject Areas were developed to support the implementation of national and consensus standards. In the case of the Prototype ERL, the basis for operations is defined in the Prototype ERL Conduct of Operations (ERL CO) agreement, the Prototype ERL SAD and ASE. Subject Area requirements, where applicable, have been flowed down into these documents.

Prototype ERL operations and maintenance procedures include task- or group-specific procedures that are used to implement C-AD management practices. The C-AD ESSHQ Division ensures that Prototype ERL operations and maintenance procedures are current and that they are in conformance with Laboratory-level governing documents, such as the Prototype ERL SAD, and the DOE approved Prototype ERL ASE.

[9] https://sbms.bnl.gov/ R2A2 Subject Area
[10] https://sbms.bnl.gov/ Subject Areas List

The C-AD ESSHQ programs that cover Prototype ERL operations are indicated in Figure 3.3.a. The Associate Chair for ESSHQ is a member of the C-AD Chair's Office. The Associate Chair's roles are to implement new or revised environmental, waste, security, safety, health, training, human performance and quality programs, to inform personnel on the status of ESSHQ, to establish clear and complete safety-related communications practices and to maintain existing ESSHQ programs. The overall approach is to integrate ESSHQ requirements into all work using procedures and practices that are designed to ensure a safe and healthy environment.

Figure 3.3.a Operations Programs for ESSHQ at C-AD

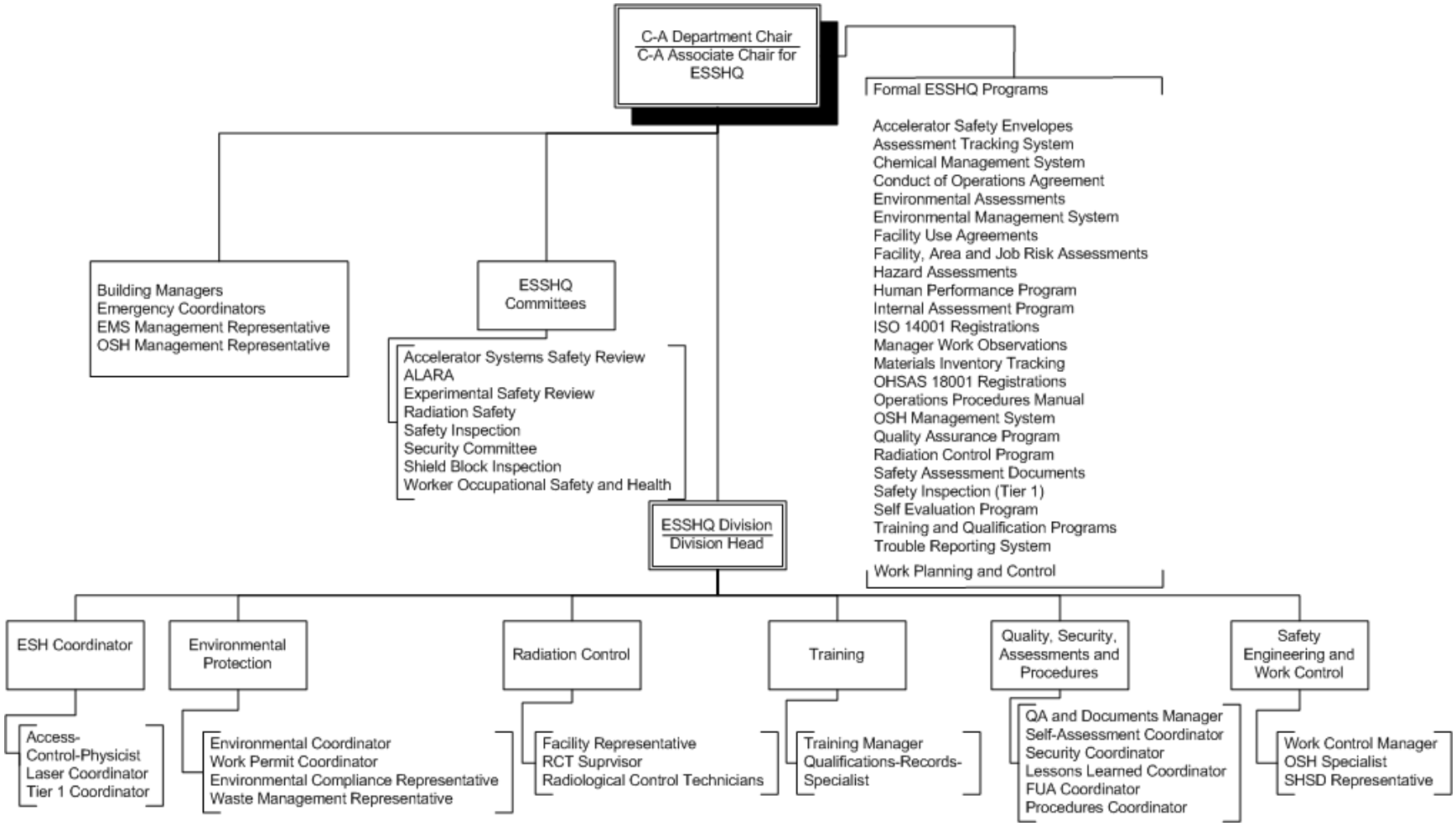

"Safety" encompasses safety, health and environmental protection including pollution prevention and waste minimization. DOE has identified five Core Functions to manage safety, and identified seven Guiding Principles for performing the five Core Functions. The BNL management system that includes the five Core Functions and seven Guiding Principles is termed "Integrated Safety Management (ISM)." BNL's management systems to implement ISM are located in the SBMS.[11] SBMS is on-line with links to all referenced documents. The SBMS satisfies the contractual requirement for documenting ISM related practices lab-wide.

The C-AD uses safety committees and ESSHQ staff to define the scope of the experiments or work, identify and analyze hazards and develop hazard controls. The ALARA Committee, Experimental Safety Review Committee, Accelerator System Safety Review Committee and RSC meet requirements established in SBMS. These Committees are composed of members of the C-AD, other BNL scientific Departments and members of the BNL Environment, Safety and Health (ESH) Directorate. These Committees operate under a system of formal procedures contained in the C-AD OPM.

Self-assessment and self-evaluation are carried out by managers by using the annual Management Review practice and by using Manager Work Observations throughout the year. Individual employees use the C-AD work planning and Safety Walk programs for self-assessment. Project physicists and Liaison physicists use the C-AD's Committees for project safety reviews and facility and experiment safety inspections. Formal procedures for conducting self-assessments and self-evaluations are listed in the C-AD OPM. Assuring self-assessments are properly implemented is the purview of the C-AD QA Group. The C-AD QA Group also

[11] https://sbms.bnl.gov/ Subject Areas List

tracks corrective actions resulting from self-assessments and self-evaluations via the Assessment Tracking System (ATS).[12]

Third-Party Certification of Management Systems for ESH

The Prototype ERL in Building 912, by way of BNL certification, employs third-party certification for its Occupational Safety and Health (OSH) management system (MS) and its environmental management system (EMS). The international OHSAS 18001 and ISO 14001 standards are consensus standards used for third-party certification of the OSHMS and EMS. Certification is the process by which a third party confirms, in writing, that an organization's management system meets the specified requirements in the standards. Successful certification means C-AD's OSHMS and EMS meet all requirements in the international standards. The certification body is a third party (non-BNL) organization that assesses management systems. This certification body is often referred to as a "registrar."

In addition to annual surveillance audits, when the certificate of registration expires, which is every three years, the certification body conducts a complete reassessment.

[12] http://ats.bnl.gov/ Assessment Tracking System

3.4. Design Criteria and As-Built Characteristics of Prototype ERL, Supporting Systems and Components with Safety-Related Functions

Superconducting RF Cavity

The superconducting linac cryomodule (Prototype ERL cryomodule) is shown in the figure below. These components are installed in the Prototype ERL facility in Building 912.

The superconducting linac cryomodule is an assembly used to accelerate electrons in the ERL. Its main element is a niobium structure called a cavity. The niobium cavity is shown in the figure below. It comprises 5 cells, to obtain a repeating pattern of the electromagnetic field in order to get efficient acceleration. The cavity resonates at a frequency of 703.75 MHz with microwave power that is fed through a port called the Fundamental Power Coupler. When cooled to liquid helium temperature, the niobium cavity becomes a superconductor, reducing the microwave losses so that high fields (up to 20 MV/m) can be set up in the cavity using a few 10's of watts of RF power. Naturally, such high fields can lead to hazardous acceleration of electrons over short distances. The high fields also cause field emission of electrons from the surfaces of the cryomodule; electrons that are accelerated to various energies by these fields until they are stopped in their path, which then results in x-ray radiation.

The details of the cryomodule are shown in the next figure. The 5-cell niobium cavity assembly is enclosed in a titanium helium vessel. The cavity is equipped with a tuner, fundamental power coupler and beam pipes for bringing the electron beam in and out of the

cavity. The beam pipes also serve as conduits for the non-fundamental microwave power generated by the beam passing through the cavity, what is called HOM (Higher Order Mode) power. The HOM microwave power escapes the cavity due to the doorknob shape of the end pieces of the cavity, and is dissipated as heat in ferrite assemblies outside of and on either side of the cryomodule. The cavity is maintained at liquid helium temperature by liquid helium brought into the cavity's helium vessel through a 2 K main line. To reduce cryogenic losses the cavity system is enclosed in a vacuum vessel equipped with a thermal shield, comprised of a metal envelope covered by Multi-Layer Insulation (MLI). The cavity must be maintained in a low ambient magnetic field while being cooled down, and for this purpose, there are two magnetic shields enclosing the cavity.

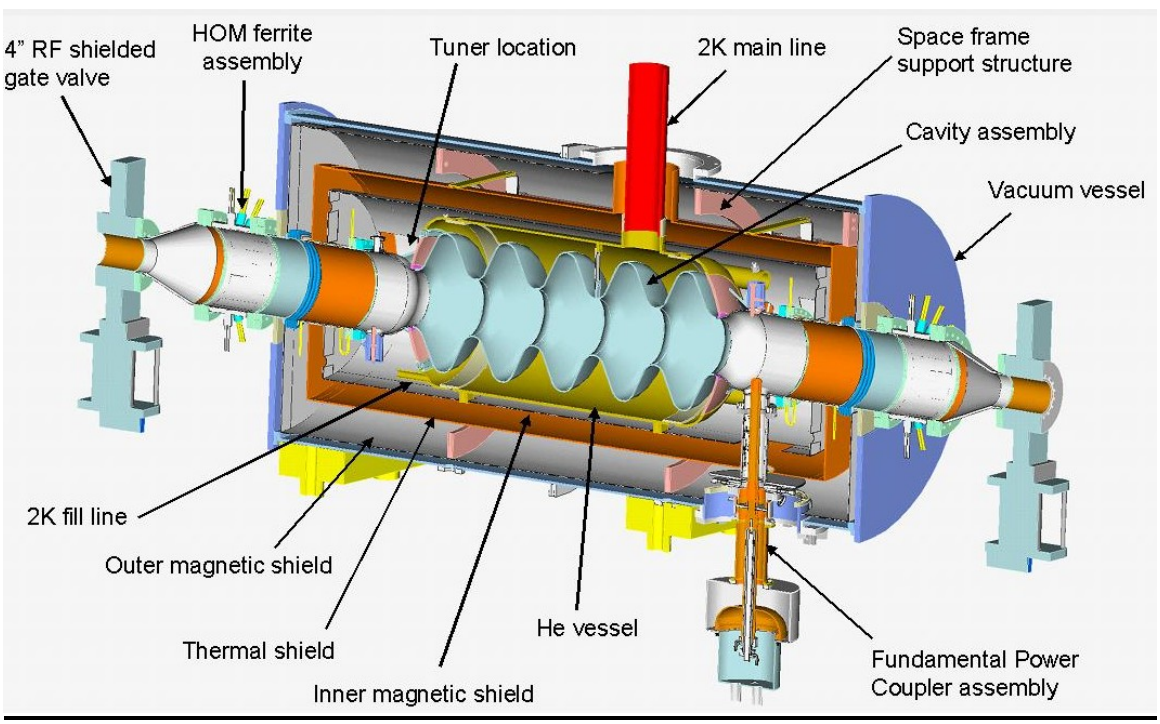

RF Systems for Superconducting Injector and Superconducting Cavity

The Prototype ERL accelerator consists of a high brightness RF superconducting electron injector followed by a superconducting linac cryomodule used to accelerate electrons. The microwave power used to accelerate electrons in the superconducting electron injector is provided to the cavity by a 1 MW RF klystron delivered via two 500 kW fundamental power couplers at a frequency of 703.75 MHz. The microwave power used to accelerate electrons in the superconducting linac cryomodule is provided by a 50 kW continuous wave (CW) Input Output Controller (IOC) that also operates at a frequency of 703.75 MHz. The cavity resonates with microwave power fed through a port called the fundamental power coupler.

The exposure to non-ionizing RF radiation is controlled to prevent the radiofrequency power generated by the klystrons from providing a source of personnel hazard. Personnel cannot be near the 1 MW klystron source during operations due to a coordinated key system preventing access to its enclosure. Personnel cannot be near the RF power at the load since it is inside the accelerator enclosure, which is interlocked during operation via the ERL Access Control System (ACS). Between the klystron and accelerator structures, the RF radiation is enclosed in a waveguide. Additionally, outside the waveguide, the RF power is confined to the vacuum enclosure of the klystron and accelerator structures, which provides a redundant safety protection feature near the load or near the source. A break in the vacuum integrity in either of these would remove the insulation required to continue generating RF power. Finally, the RF radiation contained within the system's waveguides would be surveyed as described in Subject Area: Radiofrequency/Microwave Radiation, and it will be confirmed that ambient RF radiation is

within the limits defined by the American Conference of Governmental Industrial Hygienists (ACGIH) and OSHA.

The emission of x-rays due to Bremsstrahlung from the 1 MW RF klystron is prevented via steel shield housing around the tube and tube base.

Injector System

The injector system for the Prototype ERL is shown schematically below. The injection system is made up of several major subsystems: the superconducting RF photoinjector, the cryogenic system, the cathode insertion device, and the RF system.

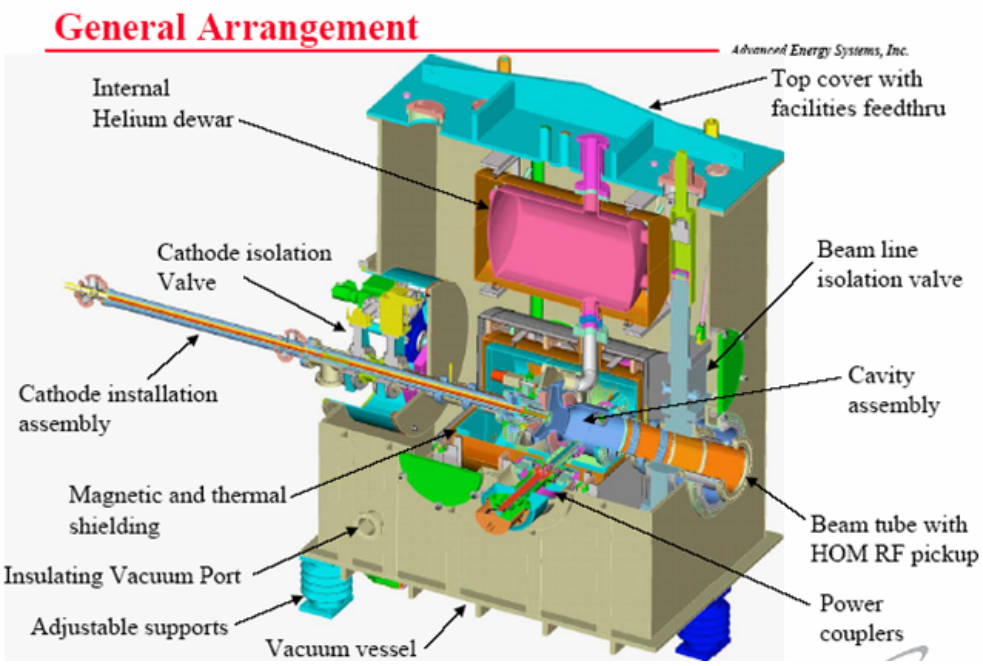

The photoinjector is an all niobium 703.75 MHz superconducting RF (SRF) cavity designed to operate at 2 K to produce and accelerate electrons. The microwave power to accelerate these electrons is provided to the cavity by a 1 MW RF klystron delivered via two 500

kW fundamental power couplers. As niobium is a superconductor at liquid helium temperatures, the surface resistance is effectively zero. This means that the microwave power fed to the cavity is almost exclusively delivered to accelerating the electrons, not heating of the niobium, allowing for CW high average current electron beam generation. This means that the 1 MW RF power can deliver a 0.5 A, 2 MeV electron beam to the Prototype ERL loop with minimal power dissipated to the liquid helium bath. During start up and conditioning, there may be dark current[13] generated in the injector. This hazard may produce x-rays when the electrons are accelerated; however, the accelerator enclosure adequately shields this radiation and access to the accelerator enclosure whenever the rf system is on is not allowed by the Access Control System.

The cavity is cooled to superconducting temperatures using 4 K liquid helium provided via external Dewars to the cryostat and internal helium Dewar shown in the schematic above. A large vacuum pump is then used to reduce the pressure over the liquid helium and thus reduce the temperature of the liquid helium to 2 K, the desired operating temperature.

The electrons are generated using a laser irradiated multi-alkali (CsK_2Sb) photocathode, which was produced in a custom deposition system designed to mate to the cathode installation assembly shown above. The laser system used to irradiate these cathodes is a Class IV laser system, with a repetition rate of ~87.75 MHz producing ~8 W of power in 10 ps pulses at 355 nm. The system consists of an oscillator locked to a master RF clock that drives the cavity, followed by a series of amplifier stages, pulse shaper/selector and harmonic crystals. The laser beam is transported to the photoinjector in enclosed beam pipes. The laser power will be low for

[13] Dark current – relatively small current that flows through a photo-sensitive device even when no photons are entering the device.

initial alignment and increased gradually to full power. A Standard Operating Procedure for laser alignment, as per the BNL Subject Area, will be used.

Cryogenic Systems

In addition to the liquid nitrogen storage vessel and helium compressor room, the cryogenic systems include:

- Ballast tank - a liquid helium storage volume mounted above the 5 cell cavity; its purpose is to provide operational time at 2 K for the cavity
- 1.1 K Vacuum Pump - a vacuum pump for sub cooling the boiling liquid helium
- Warm Piping - ambient temperature piping associated with the Prototype ERL cryogenic system
- Transfer Line - cryogenic transfer lines to supply liquid helium to the 5 cell cavity
- Instrumentation - Pressure and temperature instrumentation and their associated I/O and hardware
- Insulating Vacuum System - Vacuum pump to maintain insulating vacuums
- Process Pressure Relief Valves – properly sized relief valves for the Prototype ERL cryogenic system

Non-stamped pressure vessels in the cryogenic systems were reviewed and approved by the BNL Pressure and Cryogenic Safety Subcommittee (PCSS). Specifically, the 5-cell cavity and the SRF gun were determined to be vacuum-rated pressure vessels that have the following

equivalent protections, as per 10CFR851, since these vacuum vessels can be backfill pressurized in the event of failure:

- Design drawings, sketches, and calculations reviewed and approved by the PCSS
- Qualified personnel performed examinations and inspections of materials, in-process fabrications, non-destructive tests, and acceptance tests
- Documentation, traceability, and accountability for each vessel including descriptions of design, pressure conditions, testing and inspection

These vessels are depicted in the following figures that show the 5-cell cavity with its ballast tank and that show where burst disks have been installed.

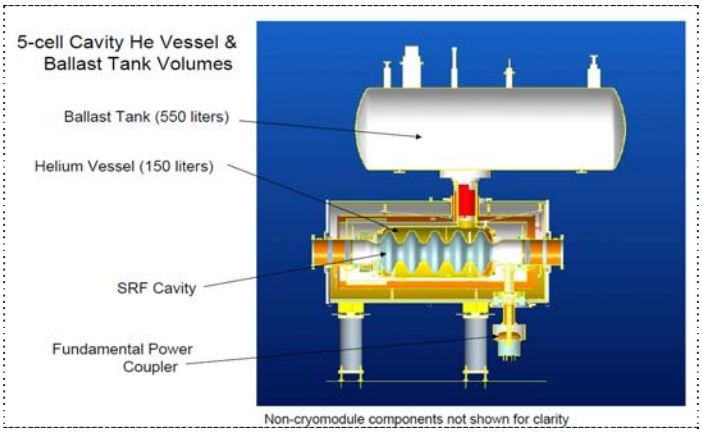

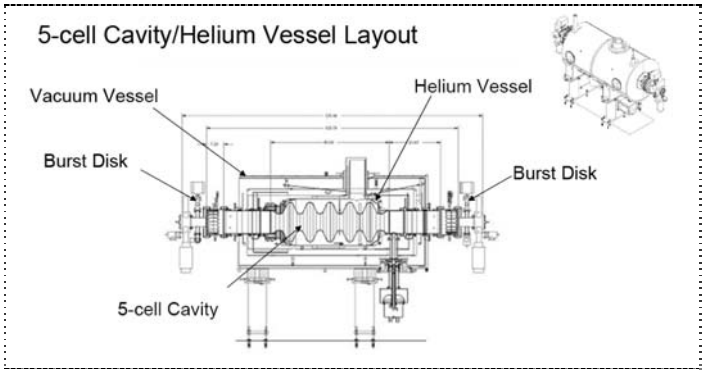

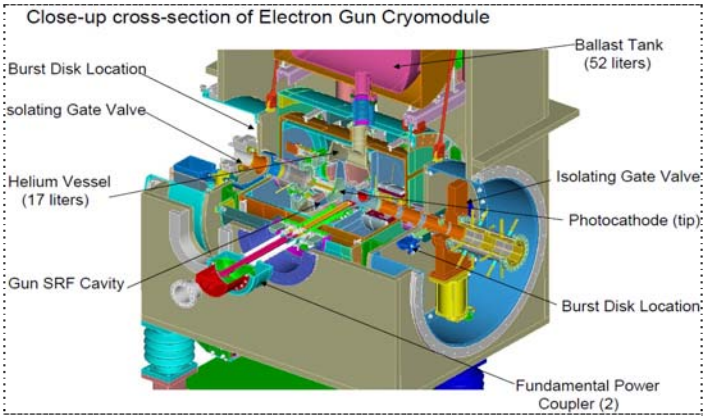

Vacuum Systems

The vacuum systems consist of:

- Vacuum Chambers - stainless steel and aluminum vacuum chambers and beam pipes for Prototype ERL loop vacuum system.
- Vacuum Pumps and Valves – high-vacuum pumps for Prototype ERL loop vacuum systems.
- Vacuum Monitoring and Control System - vacuum gauges and Programmable Logic Controllers (PLC) for Prototype ERL loop vacuum system.

Magnets and Magnet Electrical Systems

The Prototype ERL magnet systems consist of dipole magnets that force the electrons to move in a circle or arc, and quadrupole magnets that act like a lens focusing the electrons to the center of the beam pipe. The Prototype ERL magnet systems include 4 injection-line dipoles, 1 dump magnet, and the ring magnets. The ring magnets include 25 quadrupoles and 6 dipoles.

The electrical power for the accelerator is distributed at 480 volts AC, 3 phases with a high-resistance grounded delta system. The equipment that requires the 480 V AC line voltage input includes ring magnet, dump magnet and injection-line magnet power supplies. Magnet electrical systems include the DC cable for these power supplies. The installation and operation of the power distribution system and the magnet electrical system is in accord with standard industrial practice for this type of equipment. At C-AD, this includes a remote, alarming ground-fault monitoring system.

Electron Beam Dump System

As its name suggests, the beam dump is where electron bunches end up while depositing energy unrecovered by the 5-cell cavity. The beam will be spread on the surface of a water-cooled, cylindrically shaped copper electron beam dump. Dimensions of this beam dump are roughly 62” in length and 19” in diameter. Spreading the beam over this large area is done to ensure that local boiling of the cooling water does not occur. The beam will be spread over this large surface area by magnetic field coils.

Beam Instrumentation

Beam instrumentation is functionally divided into subsystems: position monitors, current monitors, profile monitors, and loss monitors. The majority of the hardware and software is not available commercially off-the-shelf, but rather is designed and produced specific to the intended function. With the exception of loss monitors, all sensors are integral to the vacuum envelope.

None of the subsystems are interfaced to the personnel protection system. The beam-loss monitors are interfaced to the machine protection system, as are the current monitors. As operational experience is gained, portions of additional subsystems may be interfaced to the machine protection system.

Controls System

The ERL control system is based on the RHIC controls system. The controls system allows three basic modes of operation:

- Commissioning: low duty factor, about 100 Hz rep rate, one bunch per pulse
- RHIC mode: 9.37 MHz operation
- Navy mode: 700 MHz continuous

As designed, the RF cavity can only accelerate one bunch without suffering a droop in cavity voltage. When that initial bunch returns to the cavity after one turn, out of phase, all but a small amount of its energy is recovered. This allows a new bunch to be accelerated with the recovered energy.

A work-console composed of standard 19-inch racks with writing shelf attachments are provided in the facility control room. Each of 3 “seats” is equipped with a Linux workstation and 4 flat-panel monitors, configured as a single continuous display resource. Rack space is provided at the console for the access control system panel display and key-tree.

General purpose and project-specific application software for operating and monitoring the equipment and beam characteristics is used. Simple software tools for device control, sequencing, data logging, comfort displays, alarms, and e-logging are used. In addition, the RHIC *post mortem* system, that comprises automatic data recording by front-ends and associated display and summary tools after an abort, has been adapted for ERL.

The residual energy of the beam after recovering most of the energy will be about 1 MW. The beam is spread across the face of the beam dump to prevent thermal hotspots. A monitoring system monitors the spread and verifies proper operation as input to the fast-beam permit system; that is, a fast-beam inhibit response will be generated if beam spreading across the face of the dump fails.

Vacuum and water cooling monitoring for the dump is included in the vacuum and conventional systems. Beam current monitoring of the dump is provided by instrumentation. Beam-loss monitors consist of analog electronics, a comparator module and a channel by channel DC reference to monitor losses. All monitoring is interfaced with the fast-beam permit input.

Conventional Facilities

The conventional facilities service the needs of Prototype ERL with building space, environmental control (Heating, Ventilation, and Air Conditioning (HVAC)), cooling water, electric power, cable tray, radiation shielding, fire detection, rigging and survey services. Located inside the Northeast Building Addition (NEBA) section of Building 912 is the 4-foot thick concrete “Block House”, the Klystron Power Supply Building and a 2-story equipment

building. The Block House requires rigging to open and close the roof to allow the larger pieces of experimental equipment to be installed or removed. The Klystron Power Supply Building was installed by an outside vendor. The equipment building houses security, vacuum and cryogenic control systems, magnet power supplies, a laser room and the Klystron. Outside of NEBA are the Experimental Control Room, two equipment buildings and Building 966, which is office and work space.

Cooling Water System

The Prototype ERL cooling water systems meet ANSI B31.9 Building Services Piping Code for pressure piping. Materials, components and workmanship are in compliance with this code. The system does not operate with pressure relief valves; however, the pumps are sized so as not to increase system pressure beyond the allowable stress for the piping, even if the cooling water stops circulating and the pumps continue to operate. The closed cooling water loops are without reliefs in order to prevent the possible release of low-level activated water to the groundwater.

The cooling tower has more than enough capacity to remove heat generated by all Prototype ERL operations. It is noted that the heat exchanger on the de-ionizer (DI) cooling loop can be expanded to increase heat removal capacity if that loop requires it. The initial planned system loads are shown in Table 3.4; however, actual Prototype ERL operations will determine the need for system changes.

Expansion tanks in this system are not ASME certified however expansion tanks are rated for 150 psi and are located on the low-pressure side of the cooling water system, which is about 20 psi. The ASME Code for Boilers and Pressure Vessels stamp is not required since the water in the tank has a design pressure less than 300 psi and a design temperature less than 210 ^{o}F. On the other hand, design and testing of the expansion tanks conforms to the ASME Code even though the expansion tanks are not stamped.

Table 3.4 Estimated Prototype ERL Cooling Water Heat Loads, Temperatures, Pressures

De-ionized (DI) Low Conductivity Water	Maximum Supply Temperature = 90 °F			
Component	Flow (gpm)*	kW Load**	Delta P	Delta T (°F)
Klystron Collector	385	650	10	11.5
1 MW Dummy Load	200	1000	5	34.2
Beam Dump	385	1000	10	17.8
50 kW Transmitter	20	80	50	27.3
50 kW Dummy Load	10	50	5	34.2
Chiller #1	50	55	10	7.5
10 Magnets @ 2kW each	20	20	50	6.8
Ferrite HOM (3)	15	20	50	9.1
FPC Gun (4 circuits)	5		50	
FPC 5-Cell (2 circuits)	5		50	
Solenoid Magnets (10 each at 2 gpm & 2 kW)	20	20	70	
He Recovery System	70	150	50	14.7
Total DI System Load	800	2045		17.5
DI System Capacity	820 gpm	1800 kW	120 psi	15 °F

* Klystron Collector and Beam Dump in series water flow.
**1000 kW heat load will either be at the 1 MW Dummy Load or at the Beam Dump.

Tower Cooled Components	Maximum Supply Temperature = 85 °F			
Component	Flow (gpm)	kW Load	Delta P	Delta T (°F)
DI Skid	800	2045	10	17.5
Tower Capacity	1000 gpm	3600 kW	200 psi	25 °F

Chiller #1	Maximum Supply Temperature = 86 °F			
Components	Flow (gpm)	kW Load	Delta P	Delta T (°F)
1 MW Circulator	20	50	70	17.1
Klystron Body 1	7	3.3	70	3.2
Klystron Body 2	7	4.8	94	4.7
Chiller #1 Load Total	34	58.1		11.7
Chiller #1 Capacity	45 gpm	60 kW	90 psi	9 °F

Air Cooled Chiller	Supply Temperature = 68 °F @ 6 kW Supply Temperature = 86 °F @ 7 kW			
Component	Flow (gpm)	kW Load	Delta P	Delta T (°F)
50 kW Circulator	7	2	87	2.0
Air Cooled Chiller Capacity	7 gpm	7 kW	90 psi	7 °F

3.5. Design Features That Exclude or Minimize Exposure to Hazards to As Low As Reasonably Achievable (ALARA) During Operation, Maintenance and Facility Modification

Superconducting RF Cavity

- Design reviewed by the C-AD RSC
- Design reviewed by the BNL PCSS
- Compliance with ODH Subject Area
- Burst disks and relief valves
- Access to area controlled with door interlocks
- Radiation shielding for beam loss and Bremsstrahlung
- Magnetic field shielding
- Configuration controlled drawings
- RF contained within vacuum enclosure

RF Systems for Superconducting Injector and Superconducting Cavity

- Design reviewed by the C-AD Accelerator Systems Safety Review Committee
- Access to area controlled with door interlocks
- RF contained within vacuum waveguide or enclosure
- 1 MW Klystron housed in steel shield to absorb Bremsstrahlung
- Configuration controlled drawings

Injector System

- Access to area controlled with door interlocks
- Protective housing for laser and laser shutter interlock
- Laser beam transported in pipe
- Configuration controlled drawings

- Radiation shielding for Bremsstrahlung
- RF contained within waveguide or enclosure

Cryogenic Systems

- Design reviewed by the C-AD Chief Mechanical Engineer
- Design reviewed by the BNL PCSS
- ODH Monitoring
- Ventilation
- Burst disks and relief valves
- Configuration controlled drawings
- The He tank: U-stamped[14]
- The LN2 tank: U-stamped
- Bulk oil tank: U-stamped
- Heat exchangers: U-stamped
- Oil removal demisters: U-stamped
- Carbon Bed: U-stamped
- Cryofab 1000 gallons liquid helium Dewar: U-stamped
- 1660S helium plant coldbox: BNL PCSS reviewed and accepted since this vacuum space can be backfill pressurized
- Ambient vaporizer: U-stamped
- Ballast tank: U-stamped

Vacuum Systems

- Design reviewed by the C-AD Accelerator Systems Safety Review Committee
- Design reviewed by the BNL PCSS where the vacuum space can be backfill pressurized

[14] U stamp – a mark that indicates the pressure vessels was designed and fabricated according to regulations called out in 10CFR851.

- Allowable compressive stresses calculated using ASME Pressure Vessel Code

Electrical Systems

- Designs reviewed by the C-AD Chief Electrical Engineer
- Designed in compliance with NFPA 70 and NFPA 70E
- Ground-fault alarm system
- Lockout capability for all energized equipment
- Nationally Recognized Testing Laboratory (NRTL) or equivalent rated equipment
- Equipment grounding and cable tray bonding
- Enclosures or barriers over conductors
- Kirk-key locks for power supplies
- Co-axial cables with grounded shields for high-voltage cables
- Component labeling system

Electron Beam Dump System

- Design reviewed by the C-AD RSC
- Beam-dump temperature interlocks
- Access to area controlled with door interlocks
- Radiation shielding
- Configuration controlled drawings

Beam Instrumentation

- NRTL or equivalent rated equipment

Controls System

- NRTL or equivalent rated equipment

Conventional Facilities

- Certified hoists, cranes and rigging equipment
- Plant Engineering review and C-AD Chief Mechanical Engineer review of structures supporting heavy loads or structural changes to cranes or buildings
- Shielding requires lifting devices
- Cooling-water leak monitoring and alarms
- Fire, smoke detection and alarm systems
- Configuration controlled drawings
- Component labeling system

Access Control System

- Design reviewed by the C-AD RSC
- NRTL or equivalent rated equipment
- Local and remote radiation alarms
- Configuration controlled drawings
- Annual system testing

Fire Protection System

- Fire Hazards Analysis
- Configuration controlled drawings
- BNL Fire Protection Engineer review
- Smoke detectors
- Sprinklers
- Fire alarms
- Annual system testing

3.6. BNL, C-AD and Prototype ERL Organizational Structure

The Prototype ERL organization (see Figure 3.6) is a sub-set of the C-AD organization and the complete C-AD organization chart can be found at the C-AD website. Responsibility for the safe and reliable Operation of the Prototype ERL resides with the on-duty Prototype ERL Operator in Charge, who resides in the ERL Control Room. The Prototype ERL Operator in Charge is the Prototype ERL Operations Supervisor for the operating personnel, and the focus for all operations related questions. Personnel that are responsible for the day-to-day operations of the Prototype ERL are members of the C-AD Accelerator Division, the C-AD Experimental Support and Facilities Division (ES&FD), and the C-AD Controls Division. Additional personnel who support the operations belong to the C-AD ESSHQ Division, the BNL ESHQ Directorate and the BNL Plant Engineering Division.

Regular meetings are held between the ERL Operations Supervisor, the Main Control Room (MCR) Operations Coordinator when the MCR crew is on-shift, the Deputy Superconducting Accelerator and Electron Cooling Group Leader and group members of the various operating groups to discuss operational problems and possible corrective actions, safety, and other matters of concern. Since the MCR Operations Coordinator and the Prototype ERL Operations Supervisor share operations resources, the chain of command goes through the MCR Operations Coordinator when MCR crew is on-shift. In this way, all C-AD operations resources during an exigent or emergency situation at ERL will be coordinated, and authority clearly established.

Figure 3.6 Prototype ERL Operations Organization

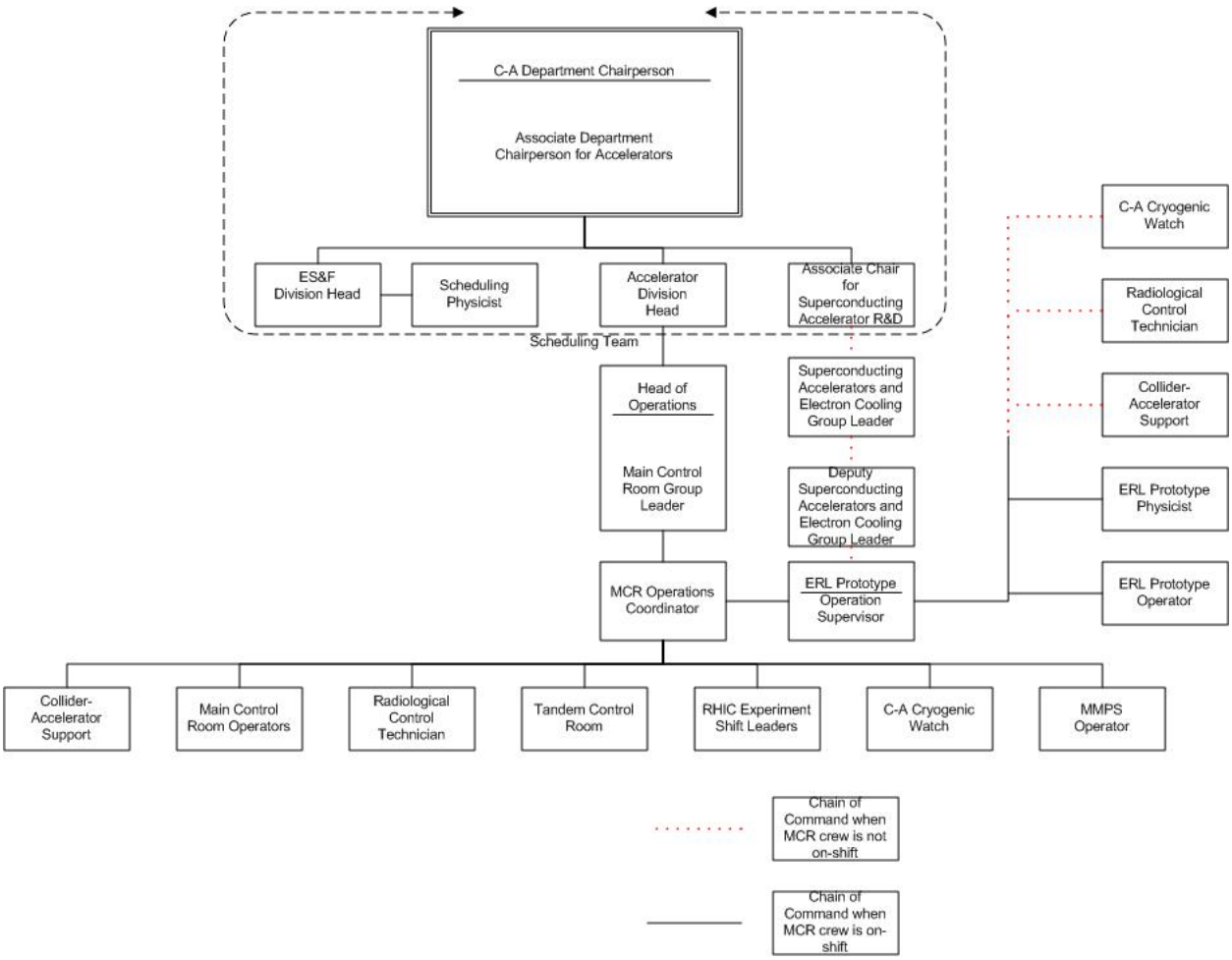

3.7. Administrative Controls for Routine Operation and Emergency Conditions

Administrative controls for routine operation and emergency conditions are the Radiological Protection Program, which provides a means of controlling the radiological exposure received by facility workers and restricts access to High and Very High Radiation Areas, and the Occupational Safety and Health Programs, which provide protection against:

- Non-ionizing radiation
- Hazardous or toxic materials
- Electrical energy

- Explosive gases and liquids
- Oxygen deficiency
- Slips and falls
- Rotating equipment
- Noise
- Thermal energy
- Cryogenic temperatures
- Protracted/irregular hours
- Natural hazards such as insects

Administrative controls, including procedures and training, provide for worker protection for the following aspects of work:

- To control access to the accelerator
- To protect workers from radiological hazards
- To ensure authorizations for work are employed
- To ensure work is reviewed for hazards and controls
- To ensure waste minimization and pollution prevention
- To provide for worker feedback
- To ensure the evacuation of workers outside as required in response to a fire alarm
- To ensure water samples are obtained in the event of a water spill
- To ensure abnormal events are reported to the C-AD management

3.8. Critical Operational Procedures to Prevent or Mitigate Accidents

C-AD specific procedures in the following areas are in place to reduce the potential for an emergency at Prototype ERL. The C-AD OPM has a search feature that may be used to easily find procedures on:

- Handling and disposing of hazardous waste
- Radioactive waste disposal
- Controlling liquid, airborne effluents
- Enhanced work planning
- Lockouts and tagouts
- Access control system testing, sweep and reset requirements
- Conduct of operations
- Control room activities
- Maintenance
- Personnel protective equipment
- Conduct of experiment procedures
- Safety review
- Self-assessment

3.8.1. Emergency Preparedness

Procedures were developed to help operators and workers respond in an emergency to reduce the potential for environmental impact and to take actions to mitigate the event. These procedures can be found in C-AD OPM Chapter 3.

3.8.2. Configuration Control

Procedures were developed to help managers and engineers review technical changes to C-AD drawings and to approve specifications for new equipment. These procedures can be found in C-AD OPM Chapter 13.

3.9. Administrative Controls

Administrative controls are found in C-AD OPM Chapter 1: Policies for Authorization, Training, Environment, Safety, Procedures, Minors, Visitors and C-AD OPM Chapter 2: Conduct of Operations, Control Room Activities, LOTO, Maintenance, Work Planning.

3.10. Calibration and Testing

The C-AD OPM contains many procedures for calibration and testing. Most apply to the calibration and maintenance of measurement and test equipment used to verify conformance to prescribed high accuracy technical requirements during inspection, testing and research. However some procedures relate to calibration of safety related equipment, such as:

- ODH Field Calibration Procedure

- Equipment Calibration Procedures for Chipmunks (Area Radiation Monitors)
- Access Control System Test Procedures

Safety-related procedures in the OPM require literal compliance since deviation could trigger consequences that result in breaking the safety envelope of the accelerator or result in injury. Exceptions to literal compliance require review and written approval by the appropriate safety committee. Only the Department Chair or the Associate Chair for ESSHQ authorizes removal of safety related procedures from the OPM when such procedures are deemed no longer applicable.

3.11. Radiological, Worker Safety and Environmental Programs

BNL uses several programs to enhance worker safety and create a safe workplace. These programs are described as follows.

Integrated Safety Management integrates safety and work. It protects worker, public and environment. It is based on the simple "Plan, Do, Check, Act" concept. The ISM has five Core Functions for performing work and seven Guiding Principles to manage work. The five Core Functions focus on work planning and control for each specific task and are:

1. Define the scope of work
2. Identify and analyze the hazards
3. Develop and implement hazard controls
4. Perform work safely within controls
5. Feedback and improvement

The seven Guiding Principles are core beliefs about managing workers and/or projects safely and are:

1. Line management responsibility for safety
2. Clear roles and responsibilities
3. Competence commensurate with responsibilities
4. Balanced priorities
5. Identification of safety standards and requirements
6. Hazard controls tailored to work being performed
7. Operations authorization

In addition to promoting these functions and principles, BNL adheres to health and safety requirements in two federal regulations: 10CFR851 Worker Safety and Health, and 10CFR835 Occupational Radiation Protection. The requirements in these regulations have been flowed down through BNL's hierarchy of documents and practices and into Prototype ERL's operating procedures and training programs.

BNL also uses four voluntary programs to help meet the requirements of regulations, and to help implement the functions and principles of ISM. These programs are:

- OHSAS 18001 Occupational Safety and Health Management Systems Specification
- ISO 14001 Environmental Management Systems Specification
- Manager Work Observation
- Human Performance

The OHSAS 18001 and ISO 14001 are third party certification programs. The certification process functions in the following manner. BNL selects a registrar to assess its ESH management systems. If the auditors determine that the occupational safety and health management system conforms to the international OHSAS 18001 standard, or the environmental management system conforms to the international ISO 14001 standard, then the certification body issues a certificate of registration.

Manager work observations are periodically performed by managers, safety specialists and workers. Manager work observation is a process that takes managers, safety specialists and workers at all levels into the work areas where they have some responsibility, to observe the work and to talk with each other about safety at the job site. Managers are expected to have brief discussions with employees regarding their specific tasks during a specific job. The objective is to improve safety by reducing risk and eliminating injury. The approach emphasizes positive, 2-way discussions in which participants learn and try to define safer ways to work.

Human performance, in its simplest form, is a series of behaviors executed to accomplish specific task objectives. Behavior is what people do and say—a means to an end. Behavior is an observable act that can be seen and heard. It can be measured. If it can be measured, it can be changed. In the accelerator business, the "end" is that set of outcomes manifested by the complex of accelerators—the safe, reliable, and efficient generation of particle beams. To improve accelerator performance, human performance must improve.

Because of the human element, people will make mistakes despite the best efforts. Studies have shown that humans make an error approximately once every 3000 times they perform the same task. Therefore, behavior and its causes are extremely valuable as the pointers to improvement efforts. Excellent human performance leads to optimum accelerator performance partially by protecting the accelerator and personnel from the consequences of human error. To do so at BNL, a set of error-prevention practices are in place to anticipate, prevent, catch, and recover from human error. These practices are aimed at double checking and triple checking before a task is performed, which has the effect of reducing human error rates by two or three orders of magnitude.

3.11.1. Examples of Pollution Prevention and Safety Improvement

Examples of pollution prevention and safety improvement at C-AD resulting from implementation of ISO 14001 and OHSAS 18001 include:

- Over 1,000,000 person-hours worked without a lost-work day injury
- Savings of about 700 MW-hours per week of operations by improving efficiency of the cryogenics plant for RHIC
- Removal and disposal of PCB electrical devices
- Water use reduced by 25,000 gallons per month

3.12. Records Management

The Prototype ERL follows C-AD OPM 13.4.1 for Records Management, which in turn follows BNL's SBMS. The Prototype ERL Records Custodian is the C-AD Records Custodian.

The applicable design specification, procurement document, operation procedure, inspection/test procedure, BNL management system, or SBMS Subject Area, or regulation specifies the records to be generated, supplied, or maintained by Prototype ERL. Examples of records to be maintained include:

- Fault Studies and Logbooks
- Engineering Change Notices
- Interlock Tests Records
- LOTO Records
- Work Permits
- Training Waivers
- Equipment Ready Checklists
- Safety Review Committee Records
- Maintenance Records
- Audit Results
- Critiques/Occurrence Reports
- Nonconformance Notices

These examples are not the exclusive records to be kept. The actual list is found in C-AD OPM Chapter 13.

3.13. Tests to be Conducted at Prototype ERL

This Prototype ERL R&D program has goals to demonstrate continuous wave (CW) operation with average beam current in the range of 0.1 – 1 ampere, combined with very high efficiency of energy recovery. The heart of the facility is a 5- cell 703.75 MHz superconducting RF linac. The Prototype ERL provides a test-bed for testing issues of transverse and longitudinal instabilities and diagnostics of intense CW e-beam. The Prototype ERL R&D program is pursued by C-AD as an important stepping-stone for increasing the luminosity of the Relativistic Heavy Ion Collider (RHIC).

Furthermore, the Prototype ERL R&D program extends toward a possibility of using a 10-20 GeV ERL for future electron-hadron/heavy-ion collider, eRHIC. The specific goals of the Prototype are to:

- Test the key components of the electron cooler
- Test the key components of high current ERL based solely on superconducting RF (SRF) technology:
    - 703.75 MHz SRF gun test with 500 mA
    - High current 5-cell SRF linac test (one turn - 500 mA, two turns - 1 A)
    - Test the beam current stability criteria for CW beam currents ~ 1 A
- Test the key components and scalability for future linac-ring collider eRHIC with
    - 10-25 GeV SRF ERL for eRHIC
    - SRF ERL based FEL-driver for high current polarized electron gun
- Test the attainable ranges of electron beam parameters in SRF ERL

3.14. Test Equipment Design Criteria and Components Having Safety Functions

Access Control System

The ACS for the Prototype ERL facility uses PLCs as the basis for decisions made by the system. In order to provide the required dual independent protection, the area served by the ACS has two independent PLCs (A and B divisions). Each division independently provides full protection. All the input/output devices (gate switches, critical devices, etc.) are redundantly monitored by both PLC systems. In addition, redundant monitoring of radiation level and ODH concerns was incorporated in the safety system.

The operator interface to the ACS utilizes touch screen displays (flat panels) on a command network that is connected through a firewall machine to the separate divisions.

The Department's 'classification' scheme for all radiological areas at C-AD defines the nature and extent of the access/beam control systems. The ACS prohibits access or limits the radiation dose when the radiological areas are accessed. Table 3.2.2.1 in the C-AD SAD delineates the access, enclosure and minimum system requirements, for each C-AD 'classification,' and takes into account the potential levels of radiation during normal operations, and the potential increases in radiation levels with abnormal conditions.[15]

There are five basic design criteria for the ACS that applies to all C-AD beam enclosures:

[15] C-AD Safety Assessment Document, http://www.agsrhichome.bnl.gov/AGS/Accel/SND/c-a_sad_and_ase.htm

- Either the radiation is disabled or the related access control area is secured
- Only wires, switches, relays, PLCs and RSC approved active fail-safe devices are used in the critical circuits of the system
- The system is designed to be fail-safe
- Redundant critical devices are used to disable the beam and redundant interlocks are used to secure the area if the dose equivalent rate can exceed 50 rem/h
- If a beam fails to be disabled as required by the state of its related access control area, then the beam is disabled upstream; that is, the access controls have backup or what is sometimes termed "reach-back"

The RSC reviews and approves changes to the ACS. They approve the critical devices and they establish the conditions that the ACS must monitor. For example, they approve electric current in beam elements, the position of moveable beam-components or the position of access gates. The RSC establishes the alarm level and interlock level for Chipmunk area radiation monitors that may be interfaced with the ACS.

During commissioning periods for new or modified accelerator facilities, radiation studies are conducted by the RSC to verify the adequacy of the shielding, access control and radiological area classification. These studies are termed "fault studies." That is, the calculated radiation levels are verified by direct radiation measurements, which confirm the appropriateness of the as-built ACS and as-built shielding, and the radiological area classifications inside and outside the facility.

Fire Detection System

Required fire protection design features are identified in the Fire Hazards Analysis (FHA). In many cases, various means are available to meet the general criteria required by the DOE Order 420.1. The following guidelines were used in selecting the appropriate protection methods:

- Wherever possible, passive protection methods are given preference over active systems; that is, passive fire rated or non-combustible construction, barriers and spatial separation are first reviewed for the ability to achieve the required level of protection before active suppression systems are considered
- Non-combustible materials are used wherever feasible to minimize the hazard
- Active suppression systems are provided where required by the referenced documents
- Wherever possible, wet pipe sprinklers are used, dry pipe for potentially freezing areas, and deluge for high challenge systems
- Alarm and detection systems are provided where required by the referenced documents; type of detection is based on the type of fire expected, and the need for sensitivity or fast response, to provide for rapid manual response or effective process shutdown to minimize damage
- Automatic Smoke Detection: Computer equipment rooms or areas that exceed the $250,000 limit established by DOE require smoke detection
- Automatic Sprinkler Protection: Computer equipment rooms or areas that exceed the $1,000,000 limit require sprinkler protection

- Fire Barriers: Where building Maximum Possible Fire Loss (MPFL) values exceed $50 M, buildings are subdivided into fire areas with an MPFL value less than $50 M; where this approach is not operationally feasible, redundant fire protection systems are provided
- For facilities where DOE orders or referenced code requirements cannot be met, the need to develop equivalent protection is identified

The FHA for Building 912, which was performed by outside consultants while the Prototype ERL was constructed in the NEBA portion of the building, indicated sprinklers would be required for some Prototype ERL rooms and some proposed Prototype ERL equipment.[16] The sprinkler feed would be via a 4-inch feed already in the NEBA Building 912 area.

The FHA consultant defined the approximate total value of the equipment in the ERL area as $5 M since the experiment uses a high value klystron gun that operates at 20 amps and 100,000 volts. Associated with the klystron gun is a power supply that is also high value. In 2007 before the Prototype ERL was completed, the FHA consultant indicated that parts of the Prototype ERL were to be protected with smoke detection; and a high-sensitivity smoke detection system was provided at the main ceiling above the Prototype ERL accelerator enclosure. The consultant indicated the control room area just outside the NEBA Building needed to be protected with automatic sprinklers and smoke detection.

[16] R. Wheeler, Hughes Associates, Inc., 3610 Commerce Drive, Suite 817, Baltimore, MD 21227-1652

Based on the FHA by the consultant and on a room-by-room analyses of Prototype ERL with the BNL Fire Protection Engineer and Prototype ERL project management, the following fire detection and protection features for Prototype ERL were implemented:

- The smoke detectors in the high-voltage power-supply-room interlock power off if smoke is detected
- Transformers have over-current protection
- The two large 100 kV transformers just outside the power-supply room are filled with Envirotemp FR3 Fluid (fire-point is 360 ^{o}C)
- A total of 800 gallons of seed-based oil is used and it is biodegradable
- Sprinklers are placed above the two large 100 kV transformers
- The high-sensitivity smoke detector near the ceiling of NEBA Building 912 interlocks the power to the 100 kV transformers off upon detecting smoke
- The first-floor ERL chiller area room has sprinklers and smoke detectors turn off power to the 100 kV transformers
- The first-floor laser room has sprinklers and smoke detectors that transmit alarm signals
- The first-floor klystron room has smoke detectors turn off power turn off power to the 100 kV transformers
- The second floor of high-rise has sprinklers and smoke detectors turn off power turn off power to the 100 kV transformers
- The pump room has smoke detectors that transmit alarm signals
- The Prototype ERL control room has sprinklers and smoke detectors
- The fire-alarm annunciation at Prototype ERL turns off power to the 100 kV transformers

- A procedure for 'manual power turn-off in the event of a fire', was written for the Prototype ERL area and trained on by the Collider-Accelerator Support Group
- A combustibles-control-plan was written for the accelerator ring enclosure and trained on by the Prototype ERL operators
- The accelerator ring enclosure has smoke detectors

A drawing showing the location of fire protection and fire detection devices is shown in Figure 3.14.1.a.

Figure 3.14.1.a Prototype ERL Fire Protection System

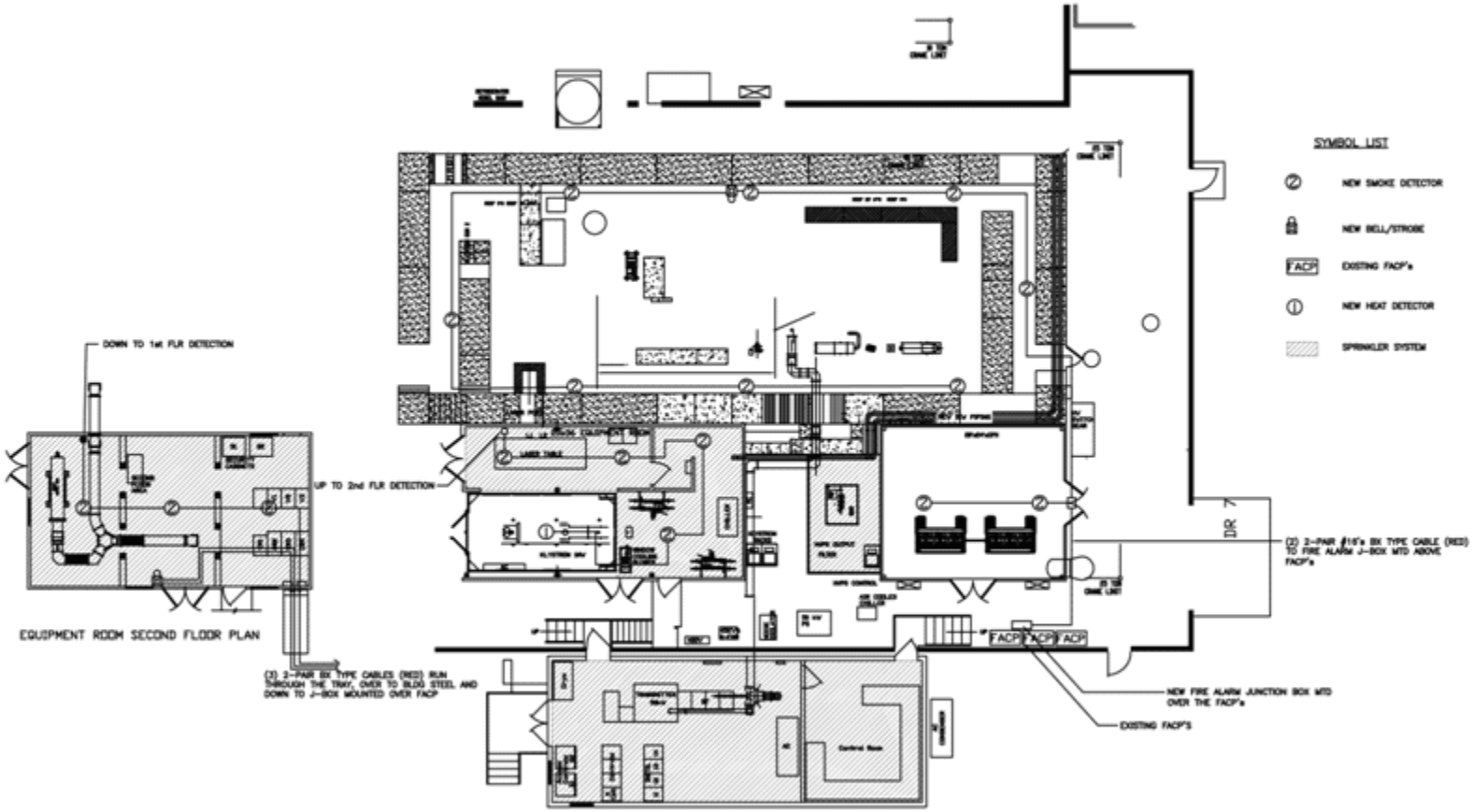

Shielding

The policy upon which Prototype ERL shielding was designed can be found in Appendix 3, C-AD Shielding Policy. By adhering to the principles of this policy, Prototype ERL workers will not receive a planned exposure in excess of 500 mrem per year, or a fault exposure greater than 20 mrem. Prior experience at C-AD has shown that maintaining this policy for shield design results in workers actually receiving 10% or less of the planned exposure. This is largely due to work planning, conservative shielding design calculations, an active ALARA program and the fact that shield blocks come in standard sizes and thicker than calculated thickness is used in practice.

The shielding is in accord with the design criteria in 10CFR835 dated June 8, 2007. In addition to meeting the design criteria, a comparison of the pre-June 8, 2007 10CFR835 quality factors and the new 10CFR835 radiation weighting factors for neutrons is shown in the table below. In Chapter 4 of this document, the analysis shows the total dose equivalent outside the shield is dominated by photons, with only a few % attributed to neutrons. A factor of 1.5 to 2 higher in neutron dose equivalent is calculated using the radiation weighting factor, while total calculated dose equivalent from the radiation field near the Prototype ERL remains the same.

Neutron Energy (MeV)	**Weighting Factor, W_R**	**Quality Factor, Q**
1	20.7	11
2	17.3	9.5
2.5	16	9
3	15	8.7
4	13.3	8.4
5	12	8
6	11	7.5
7	10.3	7

The general layouts of the important shields are shown in Figures 3.14.1b and 3.14.1c. Neutrons and photons are the predominant radiation outside the ring enclosure, and concrete is the predominant shield material. Bremsstrahlung radiation is the predominant ionizing-radiation-hazard associated with the klystron high-voltage tube, and the best shield for these lower energy photons is lead.

Penetrations and seams in the shielding will be studied during initial operations since these are the hardest features to predict accurately in terms of calculated radiation dose rates. Thus, the shielding in the layouts is "planned" as shown here. Based on measurements, anywhere unusual shielding features conspire to elevate radiation levels above the plan, then that shield will be improved.

Figure 3.14.1.b Prototype ERL Klystron Lead Shield Layout

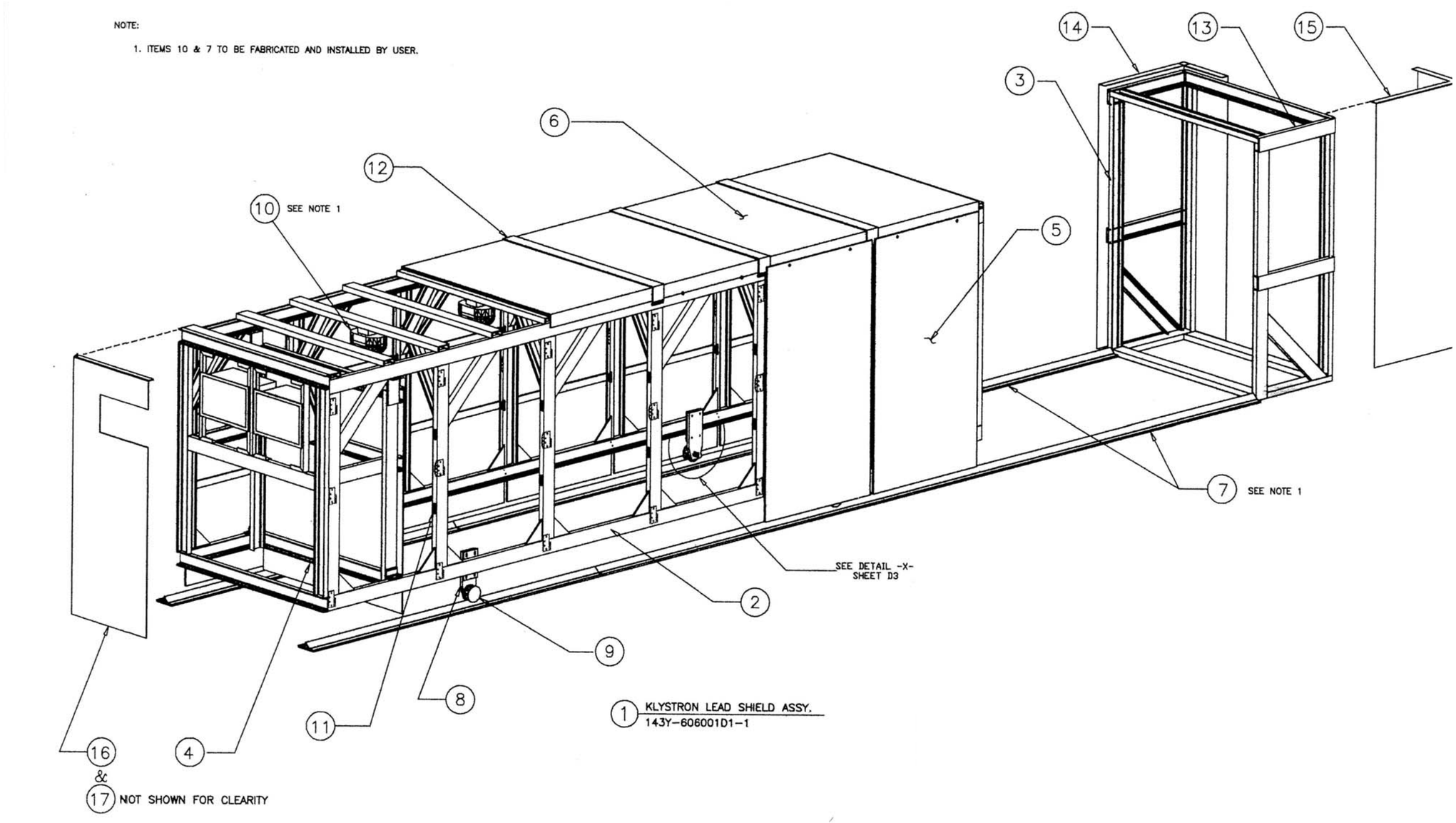

Figure 3.14.1.c Prototype ERL General Shield Layout

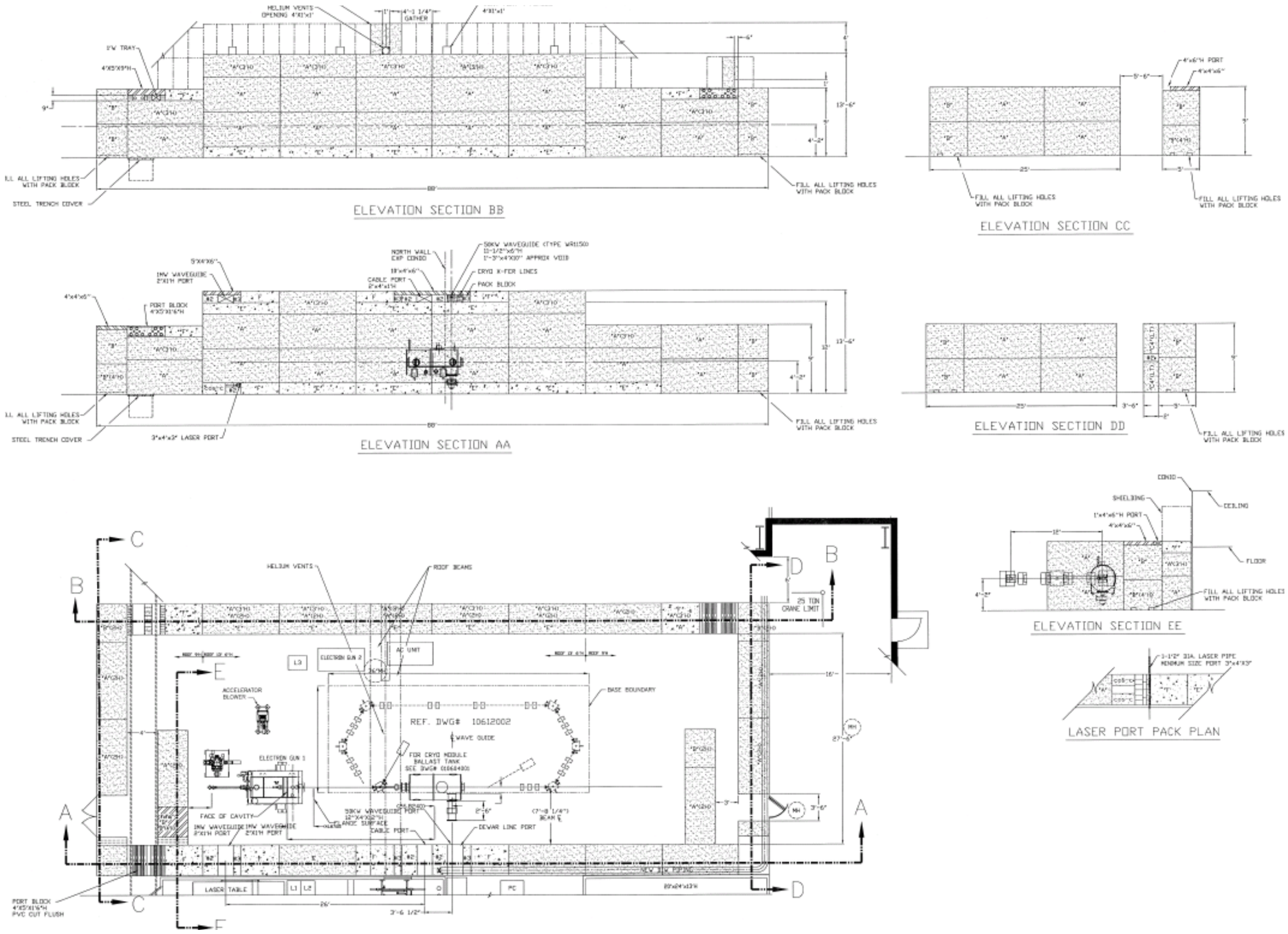

4.Safety Analysis

The level of detail included was correlated with the size, complexity, hazards, potential impacts and risks associated with Prototype ERL facility operation. The hazards analysis is comprehensive, and explored the full range of consequences each hazard could have on workers, the public, and the environment. It was based on sound assumptions so that effort would be focused on analysis of credible and realistic consequences. As allowed by DOE G 420.2-1[17], this SAD references a survey of the hazards present at the accelerator facility, including prompt radiation, radioactive materials, non-ionizing radiation, hazardous materials, and sources of energy. The hazard evaluation information in the SAD includes credible initiating events, the assumptions used in estimating the consequences, and controls required to reduce hazards and associated risk to acceptable levels. Identified controls were evaluated to determine if any were credited controls.

A credited control is one determined through hazard evaluation to be essential for safe operation directly related to the protection of personnel or the environment. The credited controls are a limited subset of the total controls employed for overall facility operation. Credited controls were assigned a higher degree of operational assurance than other controls. For example if a system, equipment or practice actively or passively protects workers and/or staff from a significant hazard, then it has formal administrative controls or limits for operation. These credited controls are treated specially and considered for incorporation in the ASE, appropriate procedures and/or quality assurance.

[17] Accelerator Facility Safety Implementation Guide for DOE O 420.2B, Safety Of Accelerator Facilities

Implicit in the above discussion is that analysis of hazards, consequences, and the types and reliability of controls, involved professional judgment. This judgment was based on sound technical and/or scientific principles using accepted methods for hazard analysis suitable for the types and magnitudes of hazards present.

4.1. Identification of Potentially Hazardous Conditions from Radiation Associated With Operation

At ERL, the primary electron beam is only present when the machine is operating. Before interacting at a particular location, the accelerated beam is essentially mono-energetic, consisting of only electrons. If the electrons stop in the accelerator equipment, beam stop or shielding, then electromagnetic cascades and Bremsstrahlung radiation can occur. For lower energy electrons, 25 MeV or less, Bremsstrahlung radiation contributes substantially to the energy loss by electrons in matter. Bremsstrahlung radiation is emitted by a decelerating charged particle or by a charged particle changing direction. Bremsstrahlung is German for braking radiation, and in particular, the term is used for photon radiation emitted by electron decelerations when electrons pass through the electric field of atomic nuclei. This produces photon radiation distributed over a wide range of energies.

If electrons are accelerated in a magnetic field, they can also produce photons and this is termed synchrotron radiation. Synchrotron radiation from this accelerator is produced when the electron beam circulates in the magnetic field of the ring. This synchrotron radiation is low energy and is attenuated by the shielding used for Bremsstrahlung.

When the machine is operating, the radiation outside the shielding is dominated by indirectly ionizing radiation such as photons and neutrons that penetrate the shielding. Neutrons are produced from the higher-energy Bremsstrahlung photons that interact with nuclei that make up the concrete shield. Because these are lower-energy Bremsstrahlung photons, at least in terms of causing nuclear reactions, the dominant neutron-producing mechanism is the giant nuclear resonance. Among the best-known example is the giant electric dipole (E1) resonance, which is concentrated in the energy region of 10 to 30 MeV for most, if not all, nuclei. In the E1 resonance, all protons and all neutrons in the nucleus oscillate with opposite phase, which produces a time-varying electric dipole moment, which acts as an effective antenna for absorbing or radiating gamma rays. The E1 resonance is the best known of the nuclear giant resonances. It is the dominant feature in reactions initiated by gamma rays. The absorption of a gamma ray induces the giant E1 oscillation, which breaks up, in this case, by emitting neutrons. This resonance is also the dominant feature in the reverse process, in which gamma rays are produced by proton and neutron bombardments of nuclei.[18]

The neutron spectrum from the E1 resonance process is often compared to a fission spectrum and is well described by a Maxwellian distribution. Shielding is relatively straightforward. The neutron-dose-equivalent tenth-value-layer for ordinary and heavy concrete is about 100 g cm^{-2} for this neutron spectrum.[19]

[18] http://www.answers.com/topic/giant-nuclear-resonance?cat=technology, January 2008.
[19] NCRP 144, Radiation Protection for Particle Accelerator Facilities, December 2003.

Neutrons can induce radioactivity in the Prototype ERL machine components, cooling water and nearby equipment. This neutron activation is expected to be insignificant at ERL because the electron energies into the beam dump are well below most activation thresholds. Residual radiation from the dump will be verified by radiation surveys near the beam dump after the machine is turned off, and by cooling water sampling and analysis. Radiation controls are in place as required during entry into the Prototype ERL following machine shutdown for inspection, maintenance, modification or repair activities. Because of the insignificant activation at ERL no contamination issues are expected.

The principal radiation hazards at Prototype ERL derive from the primary electron beam flux and duty-cycle of the machine. Listed in order of relative importance to health, these hazards include:

- Potential inadvertent exposure of workers to primary electron beam or RF induced x-rays from the electron gun or 5-cell accelerating cavities

  NOTE: The access controls system and the enclosed beam pipe prevent exposure of personnel to this beam. The probability of unsafe failure of the access controls system that would allow an overexposure from primary beam or Bremsstrahlung is so low[20] that this hazard is not credible and further analysis is not performed.

- Exposure to photon and neutron radiation near labyrinths and penetrations
- Exposure to photon and neutron radiation that penetrates through the shielding
- Exposure to skyshine radiation

[20] D. Beavis, Failures in the PLC Based Radiation Safety Systems, October 31, 2000; D. Beavis, Frequency of Interlock Testing, November 6, 2000; D. Beavis, Estimation of Time to Loss of Protection-The D-Downstream Gate, November 13, 2000.

NOTE: Escaping neutrons and gammas through thin parts of the shield or roof causes skyshine radiation; that is, the escaping radiation interacts with atoms in the air column above the accelerator and some of the resulting lower-energy radiation is scattered downward from these interactions. Skyshine radiation may extend many tens of meters from this accelerator. The Prototype ERL roof shields are inaccessible, via administrative access controls, during operations. The concern here are the dose rates from skyshine in the Prototype ERL Control Room, B966 and B940 due to the expected occupancy of these areas relative to other areas surrounding ERL. However, this source is expected to be insignificant during routine beam operations. This will be confirmed during routine radiation surveys and by environmental thermo-luminescent dosimeters (TLDs) placed around the facility.

- Exposure to activated air
- Exposure to potential residual radiation induced in machine components
- Exposure to or inadvertent release of activated cooling water to the environment

The ERL is an experimental machine that may undergo changes in operations as more is learned about its operating characteristics. If any of these changes involve a potential change in the radiation hazards, appropriate work planning and safety-committee reviews will take place to ensure that the BNL Radiological Control Manual requirements are met and ASE limits continue to be satisfied. If the ASE limits need to be revised to allow more flexibility in research/operations, the proposed ASE changes will be submitted to DOE for approval before the changes occur.

Estimates of the expected dose rates from Prototype ERL operations are described below. During commissioning, radiation surveys will be conducted to validate these estimates. The expectation is that actual dose rates will be below these computed does rates. If necessary, the shielding will be appropriately modified to ensure that routine and faulted doses and dose rates will be acceptable for full power operation of Prototype ERL.

Table 4.1 Parameters of the Prototype ERL in Building 912

	High charge mode	Low charge mode
Injection energy, MeV	3.5	3.5
Maximum beam energy, MeV	25	25
Average beam current, mA	100-200	10-200
Bunch rep-rate, MHz	9.4	9.4-700
Charge per bunch, nC	10 or more	~0.3 -1
Efficiency of current recovery	>99.95%	>99.95%

The proposed ASE limitations for the Prototype ERL are summarized below. It is noted that rated power sources for Prototype ERL, 1 MW for the gun and 50 kW for the 5-cell cavity, were increased 20% to estimate dose and dose rates. Prototype ERL power sources are not designed to produce this increased power; rather, the shielding was analyzed at this increased power level. Thus, a safety margin of 1.2 has been included in the dose and dose rate calculations in this SAD:

- Electron energy limit of 3.5 MeV for the superconducting RF gun
- The power source of the superconducting gun is limited to delivering 1.2 MW of power to the gun
- Electron energy limit of 25 MeV for the ERL ring

- Electron beam power shall not exceed the equivalent of 10 MW of instantaneous power for the electron beam in the Prototype ERL ring
- The power source for the five-cell cavity will be limited to delivering a maximum of 60 kW of power to the cavity
- A beam power of 1.2 MW for electron beam striking the beam dump

4.1.1. Unshielded Source Radiation Levels

Based on average continuous beam current of 200 mA, the average beam power is 0.7 MW at 3.5 MeV and 5 MW at 25 MeV. For the purpose of setting limits in the ASE, 1.2 MW at 3.5 MeV and 10 MW at 25 MeV were chosen as the maximum beam powers.

Continuous beam loss in the electron ring is limited via the physics of the Prototype ERL. If beam in the ring is totally intercepted, continuous beam loss in the ring vanishes since no energy is recovered to accelerate the next pulse in the CW train of pulses coming from the electron gun. This self-limiting effect is one of the peculiarities of an Prototype ERL ring. The maximum continuous beam loss is limited by the power that can be restored by the 5-cell cavity power supply, which is 50 kW. As noted previously, for dose and dose rates calculations, a factor of 1.2 or 60 kW is assumed to be the restoring power.

On the way to the dump, it is not expected that the entire 3.5 MeV beam at average current can be lost at any single point for an extended period of time. In radiation protection it is a conservative practice to assume that all electron beams produce thick-target Bremsstrahlung in

high-Z material, regardless of the actual thickness or type of target. Thick target curves (see figure that follows)[21] for Bremsstrahlung radiation from NCRP 144 Figure 3.5 show that a 3.5 MeV beam at 1.2 MW can produce instantaneous absorbed dose rates of $5x10^7$ rad/h at 1 meter in the forward direction and $8x10^6$ rad/h at 1 meter in the transverse direction. The 3.5 MeV beam has insufficient energy to cause a neutron dose contribution via the photon-giant-nuclear-resonance process. [22]

Routine loss of a small fraction of the 3.5 MeV beam is expected. In normal operations the losses of the 3.5 MeV beam will be dominated by loss at the collimator. One micro-amp of beam is anticipated to be routinely lost on the collimator. One micro-amp continuous 3.5 MeV beam loss, which is a beam power of 0.0035 kW, equates to a forward absorbed dose rate of 140 rad/h and a transverse absorbed dose rate of 28 rad/h at 1 meter with no shielding. The collimator is located in the transport between the gun and the first chicane.

The 3.5 MeV beam is not intended to be transported into the 25 MeV transport ring after the first bend after the superconducting RF cavity. For radiation safety purposes, interlocks prevent the transport of the 3.5 MeV beam past this magnet.

The electron gun beam power will eventually be transported to the beam dump. From Table 4.1, the average beam current is 200 milliamps. Two-hundred milliamps of continuous 3.5 MeV beam loss on the dump, which is a beam power of 700 kW, equates to a forward absorbed

[21] NCRP Report No. 144, Radiation Protection for Particle Accelerator Facilities, Figure 3.5
[22] Ibid, Figure 3.12

dose rate of 2.8×10^7 rad/h and a transverse absorbed dose rate of 5.6×10^6 rad/h at 1 meter with no shielding.

The high energy electron beam, 25 MeV, is separated from the low energy 3.5 MeV beam in the chicanes before and after the SRF cavity. Conservatively assuming a 60 kW maximum sustainable loss, which is the limit of the SRF power supply, NCRP 144 Figure 3.5 shows Bremsstrahlung dose rates of 4×10^7 rad/h in the forward direction at 1 meter with no shielding, and 5×10^5 rad/h in the transverse direction. Since this energy Bremsstrahlung also produces giant resonance neutrons, the 25 MeV beam generates the highest neutron yield.

Swanson[23] (see figure that follows) has illustrated the broad features of the radiation field due to the unshielded initial interactions of electrons. The figure shows the radiation dose is heavily dominated by the Bremsstrahlung contribution. However, this figure is useful for making crude estimates of the resultant neutron radiation field. For a 60 kW continuous loss of 25 MeV electron beam, neutron dose equivalents range between 6×10^3 and 1×10^5 rem/h at 1 meter, which are several orders of magnitude less than the dose equivalent from Bremsstrahlung. At C-AD, a value of 430 rem/kW-h at 1 meter was used in the RSC Chair's analysis for electron energy of 25 MeV (i.e., 3×10^4 rem/h at 60 kW).[24]

---

[23] W. P. Swanson, Radiological Safety Aspects Of The Operation Of Electron Linear Accelerators, Technical Report No. 188, International Atomic Energy Agency (IAEA), Vienna, 1979. Adapted in Radiation Physics For Personnel And Environmental Protection, Fermilab Report Tm-1834, Revision 7, April 2004, J. Donald Cossairt, Fermi National Accelerator Laboratory.

[24] D. Beavis, Simple Estimate of ERL Radiation, August 1, 2006.

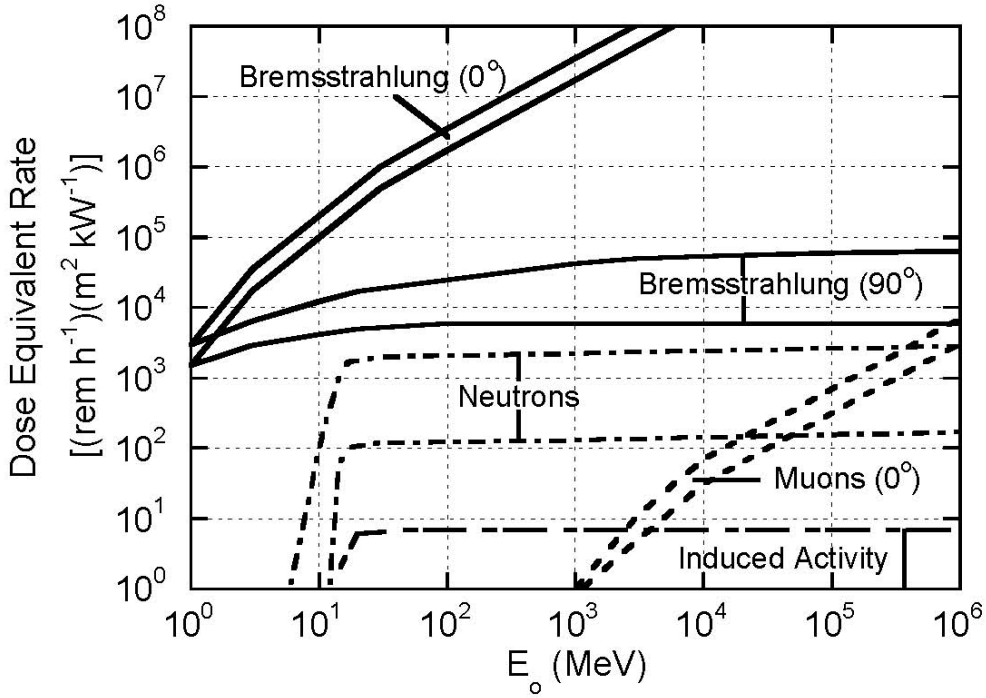

Fig. 3.10 Dose-equivalent rates per unit primary beam power at one meter produced by various types of "secondary" radiations from a high-Z target as a function of primary beam energy, if no shielding were present (qualitative). The width of the bands suggests the degree of variation found, depending on such factors as target material and thickness. The angles at which the various processes are most important are indicated. [Adapted from (Sw79a).]

The unshielded dose rate values represent a starting point for appropriately shielding the facility in order to adhere to the C-AD Shielding Policy. Section 4.1.2, which is the next section, contains detailed results of calculations that were performed for the shielded facility.

4.1.2. Maximum Credible Dose Rates on Outside Surface of 48-Inch Concrete Shield

Beam loss in the ring is limited for machine protection by beam current transformers used in a differential mode, and is anticipated being low because high loss would cause major equipment damage, quickly terminating operation of the accelerator. On the other hand, for this analysis the machine protection system is not credited in reducing dose from a beam loss event.

The maximum sustained beam loss is 1.2 MW for 3.5 MeV injection electrons and 60 kW in the 25 MeV ring. Credible routine losses are expected to be 1 W at beam injection and 50 W for the 25 MeV beam. Additional heavy concrete or iron shielding for the electron ring in the cave is present to reduce the Bremsstrahlung dose rate in the forward direction. This added shielding reduces the 0-degree Bremsstrahlung dose rates by a factor of at least 0.005. Including this added shielding, the following estimates for gamma and neutron dose rates at the outside surface of the Prototype ERL cave shielding are shown in Table 4.1.2.a.[25,26] Details of the calculations are given in Appendix 1.

[25] D. Beavis, Simple Estimate of ERL Radiation, August 1, 2006
[26] D. Beavis, The Effectiveness of a Two-Foot Thick Inner Heavy Concrete Wall, December 11, 2006

Table 4.1.2.a Dose Outside of Prototype ERL Cave for 3.5 and 25 MeV Electrons

Condition	Instantaneous dose rate from maximum beam loss[a]	Dose rate from sustainable loss[b]	Dose from sustainable loss assuming interlock occurs[d]
3.5MeV@ 0 degrees, γ	88,000 mrad/h	0.073 mrad/h	0.0002 mrad
3.5MeV@ 90 degrees, γ	18,000 mrad/h	0.015 mrad/h	0.00004 mrad
25 MeV@ 0 degrees, γ	65,000 mrad/h[c]	4000 mrad/h[c]	10 mrad[c]
25 MeV @ 90 degrees, γ	13,000 mrad/h	800 mrad/h	2.0 mrad
25 MeV neutrons	120 mrem/h	6.0 mrem/h	0.015 mrem

[a] The maximum instantaneous beam loss is 1.2 MW at 3.5 MeV and 10 MW at 25 MeV, a loss which would terminate after a small fraction of a second.
[b] The sustainable loss is 1 W for 3.5 MeV and 60 kW for 25 MeV electrons is assumed.
[c] The forward direction gamma dose rates have been reduced by a factor of 0.005 by the addition of 2-feet of heavy concrete in the electron ring.
[d] As with all C-AD interlocking area-dose-rate monitors (named 'Chipmunks'), a 9-second delay from sensing the trip point dose rate to stopping of beam is conservatively assumed in SAD analyses.

Routine surveys during commissioning will ensure that radiation area postings reflect the actual dose rates during operations.

The electron gun and the 5-cell accelerating cavity will generate x-rays from field emission of wall-surface electrons. They are assumed to generate x-ray dose rates similar to the RHIC RF cavities. A conservative dose rate of 2000 rad/h at 1 meter is assumed for the maximum sustainable loss during conditioning of the cavity and 80 rad/h at 1 meter is assumed for routine losses. Comparison of this source with the dose rates from the routine electron beam loss shows that the x-ray dose rates at the outside surface of the Prototype ERL cave shielding are insignificant.

The Monte Carlo Neutron Photon Transport Computer Code (MCNPX) was run to estimate the dose rates from skyshine in normally occupied areas during ERL operations. The results are summarized below for the assumed maximum sustainable loss of 60 kW, and for a more realistic but conservative loss of 50 W assuming that Chipmunks interlock the beam at a set point determined by the RSC. It is noted that Prototype ERL will be run only about 25% of a year. Using this occupancy with the expected sustainable loss of 50 W, the annual dose to an individual in the Prototype ERL control room will be 41 mrem.

Table 4.1.2.b Skyshine Dose Rate Estimates From 25 MeV Beam Loss[27]

Occupied Location	Maximum sustainable loss (60 kW of 25 MeV electron beam)	Conservative sustainable loss (50 W of 25 MeV electron beam)	Maximum dose with 60 kW loss assuming Chipmunk Trips Beam
ERL Control Room	98 mrem/h	0.082 mrem/h	0.25 mrem
Building 966	26 mrem/h	0.022 mrem/h	0.07 mrem
Building 940	4.0 mrem/h	0.0033 mrem/h	0.01 mrem

The Klystron room shielding was based on the operation of a similar Klystron at Los Alamos, which had a 1/8 inch lead "garage" over it. The Prototype ERL Klystron operates at an upper voltage of ~92 kV. For the ~200 kV upper energy limit of the x-rays, the 1/8 inch of lead was computed[28] to be equivalent to 1-inch of steel at operating voltage and ~2.1 inches of steel at 150 kV. Based on this calculation and radiation measurements made at the manufacturer's facility, the Klystron room is a steel box with a wall thickness of 2 inches of steel. There are penetrations in the back wall for utilities and the wave guide. These penetrations are shadowed by steel and lead to prevent x-rays from directly shining out.

Dose estimates for the penetrations use a combination of simple source terms and estimates of the attenuation of the radiation as it propagates through the opening.[29] The estimates are intended to be order of magnitude estimates. Conservative assumptions are usually used so that the estimates represent upper limits for the potential dose rates. The low-intensity fault studies for the RF-gun, five-cell cavity, and transport of the low energy and high energy

[27] Email from K. Yip to R. Karol dated January 29, 2008, Skyshine
[28] MicroShield Version 7.02, Grove Software Incorporated
[29] D. Beavis, Dose Rate Estimates for ERL Penetrations, March 26, 2008.

electron beams will be used to verify the source terms and radiation transport through the shielding and penetrations.

There are approximately 20 penetrations through the Prototype ERL external shielding. Two of the major penetrations are used for personnel and equipment access. Several of the penetrations are buss blocks containing several dozen small penetrations for access of utilities. Other penetrations are intended for electrical cables, cryogens, gas exhaust, laser beam, etc.

The ERL enclosure has side walls composed of between four and eight feet of light concrete. The thin sections of wall are shadowed from the potential sources with inner shield walls located appropriately. The entire facility has a single layer of light concrete roof beams four feet thick, except for a transition region where the roof is two layers of roof beams. This transition region is where the 13 foot ceiling height in the center is reduced to 9 feet at both ends.

The radiation sources are predominately x-rays and gamma rays. The 25 MeV electron beam is capable of generating neutrons. Only in conditions where substantial high-Z shielding materials have been used or where it takes many bounces for radiation to get through a penetration is it possible for the neutron dose rates to dominate the x-ray dose rates.

The shielding was evaluated for two types of exposures, normal and fault conditions. Dose rates during fault conditions are typically many orders of magnitude larger than that of normal operating conditions. The areas around the penetrations are typically not occupied and they are posted for localized elevated dose rates. The main focus of the penetration analysis is

the issue of dose to personnel during a faulted beam condition, as opposed to dose from normal operations.

During operations, all areas near the Prototype ERL shielding are posted at least as a Radiation Area. Large dose rates caused by fault conditions are detected and controlled by area radiation monitors (Chipmunks) distributed around the area as defined by the RSC. These devices are coupled with the interlock system and terminate the radiation in 1 to 9 seconds depending on the level of radiation at the detector. A delay of 9 seconds was assumed for the estimate of dose from fault conditions.

The four sources of radiation in the area are the injector, beam losses of the 3.5 MeV electron beam, the five-cell cavity, and beam losses of the 25 MeV electron beam. The source terms used are conservative. As already noted, the fault studies at low intensity will provide a check on the source terms and the effectiveness of the installed shielding.

The injector and the five-cell cavity can generate copious x-rays. No modeling has been conducted for the injector and the five-cell cavity in terms of the x-ray generation, but experience from other similar systems at C-AD can be used for guidance. The conditioning of these RF cavities will cause the largest x-ray generation. The superconducting five-cell cavity is expected to be able to absorb 100 to 1000 watts from field emission electrons crashing into the walls of the cavity before boiling too much helium and becoming normal. The voltage difference that field emission electrons cross is typically less than the gradient of a single cavity, 5 MV. Only a few electrons accelerate across several cavities. It is assumed that all the electrons are at 3.5 MeV with a maximum conditioning loss of 250 W. It is expected that the routine loss is less than 10

W for the five cell cavities. It was assumed that the injector has this same characteristic. Previous methods[30] are used to estimate the 90-degree radiation, using thick target formulas. The calculated unshielded dose rates for conditioning are 2000 rem/h at 1 meter, and for normal operations, 80 rem/h at 1 meter. Thus, the shielding used to protect against normal electron beam losses is adequate to protect against this source too.

The dose from a 25 MeV electron beam loss in the near zero degree direction has been estimated to be 10,800 rad/hr at 3 meters with 2 feet of heavy concrete between the source and the point of interest with a 60 kW loss[31]. This value was used in the calculations for locations where an inner shield wall acts as a shadow for the 25 MeV beam losses in the ring.

The maximum sustainable beam loss that the 5 cell cavity can support is 60 kW, which is limited by the RF power supply. According to the machine designers, the realistic maximum local loss that can occur is between 10 and 100 W before the machine is damaged and shuts down. The ERL has machine protection devices to limit losses in order to avoid equipment damage. Thus, the 60 kW loss assumed for shielding calculations (Appendix 1) is considered conservative. Routine losses are expected to be less than 10 W.

The 3.5 MeV beam has a power limit of 1.2 MW. This power can be deposited in the water cooled beam dump, which has local shielding. Again it is not expected that the machine can survive a large beam loss at any location, except at the beam dump. The beam dump is shielded sufficiently and was not considered for the penetration evaluations.

---

[30] D. Beavis, "Simple Estimates of ERL Radiation", August 9, 2008.
[31] D. Beavis, "The Effectiveness of a Two-Foot Thick Inner Concrete Wall", December 11, 2006, Figure 1.

An arbitrary 1 kW of a 3.5 MeV electron beam was assumed for the penetration analysis. A routine loss of 10 W or less is expected. Any routine loss higher than this, as observed during daily radiation surveys, will be reviewed by the RSC for the possible addition of local shielding.

The following table (Table 4.1.2.c) summarizes the calculations in Appendix 1 for each penetration for gamma rays and neutrons. The maximum neutrons can come from a different source location than the gamma rays. In all cases the maximum gamma dose rates are from the 25 MeV electron beam losses.

Table 4.1.2.c Estimated Maximum Dose Rates and Fault Dose to Worker Near Penetrations

Penetration	Maximum Gamma Dose Rate (rem/h)	Maximum Neutron Dose Rate (rem/h)	Maximum Dose with Interlock (mrem)[8]
Laser port	2.5	0.024	6.3
1 MW Waveguide	50	0.48	130
Cryo Ports (5)	10 [1]	2.4 [1]	31
North Gate	0.31	2.2	6.3
North Labyrinth Buss Block	4.8 [2]	0.12	12
South Gate	59 [3]	0.19	150
Port in South Labyrinth (2)	72 [4]	0.72	180
West Trench	7.2	0.12	18
East Trench	2.4	1.9	11
South labyrinth buss block	0.12	0.36	1.2
ODH Vent	12 [5]	4.8 [5]	4.2
Lifting Fixture holes (4)	1.7 [6]	0.010 [6]	4.3
50 kW waveguide	34 [7]	1.2 [7]	88

[1] Assumes that steel has been used to reduce the gamma rays by a factor of 10.
[2] This is directly outside the buss block. This may be in a fenced area.
[3] A shield block in the ring center would substantially reduce this dose rate, if desired.
[4] At port exit which may be in a fenced area. Port may be packed in the future. This value is for the port with the highest dose rate of the two ports.
[5] This is on the roof and is not allowed to have personnel access during operations.
[6] Evaluated at the edge of the shielding and not on the roof.
[7] The penetrations for the cables ports, water pipes and the 50 kW waveguide are computed in a separate note[32]. The dose rates presented here are at a height of 12 feet above the floor.
[8] Barriers are used to prevent access to penetrations greater than 20 mrem fault dose. Shielding will be added and barriers removed based on fault studies in order to reduce the fault dose below 20 mrem.

All the dose rates in the Table 4.1.1.c are sufficiently low such that with appropriately placed Chipmunk monitors to terminate the beam on large beam losses, the exposure to personnel is less than 10 mrem from a fault. Where fault dose rate exceeds 50 rem/h at a penetration opening, dual failsafe Chipmunks must be used. However, several of the larger dose rates can be further reduced and fault studies will allow evaluation of the need for added shielding by the RSC.

[32] D. Beavis, "Estimate of the Radiation Exiting Penetrations for the ERL 50 kW Waveguide, Cable Buss Block, and Water Pipes", Dec. 6, 2006.

4.1.3. Maximum Credible Ozone Concentrations in the Prototype ERL Cave

Toxic gasses produced by ionizing radiation shows that ozone is among the most toxic and could be produced in quantities that cause the room to exceed the ACGIH Threshold Limit Value (TLV) level of 0.1 ppm. The TLV is the concentration that most workers could be safely exposed to 8 hours per day, 5 days a week. The highest radiation doses to air are where the highest local concentration will be located. There are no locations in the Prototype ERL beam line where electrons traverse air so only the radiation energy imparted by the Bremsstrahlung is considered in this analysis. The calculation model for ozone production in Swanson was used.[33]

The highest power level in the Prototype ERL is the energy deposited in the beam dump. This is 1.2 MW of 3.5 MeV electrons. For an uncollimated Bremsstrahlung beam from an optimum high-Z target, the production rate of ozone, P in liters per minute, is:

$$P = 1.7 \times 10^{-4} L\Omega$$

Where: L = meters of air

Ω = kW of electron beam power, 1200 kW for the beam dump

The beam dump is to be enclosed in a 1-foot lead shield with at most ~6" of air that the Bremsstrahlung beam passes through before encountering shielding. The actual air passage is much less. Using these conservative assumptions yields an ozone production rate of 0.03 L/m.

[33] W. P. Swanson, Toxic Gas Production at Electron Linear Accelerators, SLAC-PUB-2470, February 1980.

As indicated by Swanson, the mean life of ozone in air at room temperature, T, is 50 minutes for a radiation environment. Any natural ventilation of the cave is conservatively ignored. The calculated saturated concentration of ozone, C_{sat}, is:

$$C_{sat} = PT/V$$

The 6 inch air volume around the dump is 12,400 in^3 (200 L) since the dump is 60 inches long x 19 inches diameter. C_{sat} for that air-gap between the dump and lead shield is $7.5x10^3$ ppm. Assuming exchange of the air in the gap occurs with cave air (V of 20,000 ft^3 or 570,000 L), then saturation concentration is reduced by a factor of 200/570000 or to a level of 3 ppm, well above the TLV limit.

Based upon this calculated result, the beam dump is to be enclosed in a tight structure maintained free of air by using an inert gas such as helium, or the air space between the dump and the lead shield will be ventilated outside the cave into B912 where the ozone will significantly dilute to safe levels. Ozone measurements will be made during ERL commissioning to determine the actual magnitude of the ozone problem and to optimize the solution.

The credible sustainable losses of the electron beam are 1 W for the 3.5 MeV electrons and 50 W for the 25 MeV electrons. The length of air until the uncollimated Bremsstrahlung beam reaches shielding is no greater than 4 meters. Assuming that the ozone produced by these losses are continuous and reach saturation in the ERL cave, the ozone concentration is 0.0003

ppm for the 3.5 MeV beam loss and 0.01 ppm for the 25 MeV beam loss. Thus there are no unsafe ozone hazards from routine electron beam losses.

4.2. Identification of Potentially Hazardous Conditions from Oxygen Deficiency

OSHA defines an oxygen deficient atmosphere in 29CFR1910.146 as atmospheres containing less than 19.5% oxygen by volume. Normal atmospheres contain ~21% oxygen. Clinically observed effects from oxygen deficient atmospheres do not begin until the concentration falls to ~17%. If a small number of workers are exposed to potential oxygen deficient atmospheres, it is cost effective to use conservative controls for protection. However, with large exposed populations it is necessary to better establish controls at an appropriate level. With too little control, the injury rate may be unacceptably high. With too much control, the ability to operate efficiently is diminished.

Controls address two types of exposures: one where a known oxygen deficiency exists, the other in which an oxygen deficiency does not exist but there is a potential for its occurrence. The latter type exposure in particular applies to Prototype ERL, although a known oxygen deficiency could exist, for example, in a confined space such as a trench in which sample results show <19.5% oxygen. Work planning would determine the controls needed to safely work in this space. Controls would include periodic atmospheric monitoring, self-contained breathing apparatus, ventilation and confined space permits. The premise for controlling a potential oxygen deficiency is that the risk to workers should be no greater than risks in a general industry setting.

If exposure to reduced oxygen from an accidental event is stopped early enough, effects are reversible or avoided altogether. If not, permanent central nervous system damage or death can result. Major effects hindering escape from the vicinity of an oxygen deficiency are disorientation and unconsciousness. For personnel actively working, unconsciousness occurs at ~13% oxygen. A person in the general area of a catastrophic release of an inert gas and not hurt by a pressure wave would be alerted to the escaping gas by the noise and, if a cryogenic gas, the cold and resulting vapor cloud. ODH training is used to alert personnel to leave the area. In this case, personnel are trained to know that they can out-walk the expanding inert-gas cloud and safely walk out the nearest ERL cave exit.

The controls for potential oxygen deficiency are focused on the workers in the general area of the potential release. The survival of individuals in the general area is highly probable because of the engineering and administrative controls, monitoring systems, and training.

For the highly unlikely scenario in which an individual is in contact or very near failed equipment at the time of failure, the affected individual would be exposed to several hazards. These would include the powerful mechanical forces that resulted in a release of gas or cryogenic liquid, a pressure vessel failure for example, and the oxygen deficiency condition. In those extreme conditions, a person would lose consciousness in seconds and probably not survive.

Training for workers includes the methods to become aware that a release of inert gas has occurred, escape methods and use of appropriate oxygen monitoring devices and escape packs.

In addition to training on use of oxygen monitors and escape packs, ODH information is given in the facility specific courses required of all employees and users.

The C-AD SAD has a detailed description of the graded approach used to determine the controls necessary for areas having a potential for oxygen deficiency. It is recognized that these simplified methods cannot directly and quantitatively address the effects of the inert gas concentration gradients during transient release of the gas. The approach is to use a prescribed, simplified analysis to determine how an individual can have reasonable assurance that they are protected from a gas release. It treats the problem in a global way, by assuming uniform instantaneous mixing of the gas in all available volume within the enclosure. For nitrogen, helium and lighter gases, used at ERL this is reasonable. As already noted, individuals near the location of any release have higher likelihoods of injury or death. Thus a combination of the BNL SBMS ODH methods coupled with engineering judgment, assumptions on worker training, evacuation procedures and monitoring equipment are utilized in determining the controls needed to ensure an acceptably safe workplace.

The BNL SBMS models are used to determine the ODH classification of a building. The SBMS is based on the Fermi ODH model. The Fermi Model is a prescribed method to determine the necessary level of hazard control for a building having the potential for oxygen deficiency. A graded approach is used to implement hazard controls as a function of the computed ODH fatality rate. The fatality rate is selected as the hazard index since death is the most important, non-reversible effect of exposure to oxygen deficiency. The average US industrial fatality rate at the time the method was developed (1984), ~10^{-7}/hr, was defined to be the fatality rate at which

protective measures, other than training and postings are required.[34] Today, that rate is about $2x10^{-8}$/hr.

Areas of ERL which have potential ODH hazards have been evaluated as described above. A low oxygen concentration set point/alarm is 18%. Alarm set points below 19.5% are acceptable because these alarms warn of accidents and not of planned, routine working conditions. ODH sensors and alarms will be located on the walls within the accelerator enclosure at eye level, and within the helium recovery building. These areas are small enough such that alarms are visible and audible from any location within the rooms. The results of the ODH analyses for the affected areas of ERL are summarized in Table 4.2.[35]

Table 4.2 Potential ODH Areas at ERL

Building	Free Volume	Bounding Cryogenic Leak Location	Spill Rate (SCFM)	ODH Exhaust Fan Capacity (SCFM)
ERL Cave in B912	20,000 ft^3	Failure of 1-inch copper LN2 transfer line	3275	13,750
ERL Helium Recovery Building	9500 ft^3	Rupture of Kinney vacuum pump helium discharge line	1150	4850

The Prototype ERL Cave volume assumed for ODH analyses conservatively excludes the labyrinth volumes and accounts for the equipment in the cave. The Prototype ERL helium recovery building volume also accounts for the equipment in the room. The results of the ODH calculations show that both the cave and the helium recovery building are ODH 0 areas.

[34] T. Miller and P. Mazur, Oxygen Deficiency Hazards Associated with Liquefied Gas Systems: Derivation of a program of Controls, Am. Ind. Hyg. Assoc. J. 45(5):293-298(1984).
[35] BNL LESHC Meeting Minutes 06-06, May 18, 2006, Energy Recovery Linac in Building 912R. Karol, ERL ODH Calculations, January 8, 2008.

4.3. Identification of Potentially Hazardous Conditions from Electrical Energy

Chapter 3 describes the numerous electrical devices, magnets, power supplies, vacuum system, Klystron, RF systems, beam instrumentation and controls that are employed at Prototype ERL.

The sheer number of electrical devices and their conductors installed at accelerator and experimental facilities justifies recognizing electrical hazards as a major personnel hazard which requires detailed hazard controls. C-AD adheres to BNL SBMS subject area on Electrical Safety supplemented by the C-A-OPM 1.5 procedure series, order to mitigate electrical hazards. The hazards are described as follows:

AC Distribution

1. The primary AC distribution is at 13.8 kV. The feeds are underground to substations located at various sites. Transformers convert the 13.8 kV to 480 volts AC for subsequent distribution. Because of the very high hazard, the substations are fenced in with controlled access by the BNL Plant Engineering personnel. C-AD personnel do not normally have access to these areas.
2. Secondary distribution is 480 V, 3 phase, 60 Hertz, high resistance ground delta with remote sub-station ground-fault monitoring system. This is used directly in many pieces of equipment, motors, pumps, power supplies, etc. It is further transformed to 220/120 V, 3 phase for lights, utility outlets and all general needs. The hazard at 480 V is not only from a 480 V shock, but also from the possible arc formation at a short circuit. The short circuit currents are extremely high and an arc can create a shock wave and spray molten

copper and other materials. The procedures followed on 480 V circuits include training, LOTO or key lockout, circuit voltage testing, and the use of proper personnel protective equipment, the use of which is based on arc flash calculation.

High Voltage, Direct Current

1. Low Current - In many pieces of electronic equipment there are high voltage, low current, power supplies. While the current in some cases may present a direct shock hazard, in others it will be too low to cause a direct injury, but may lead to indirect injuries, such as, falls, bumps or other physical or electrical mishaps. ERL components are prominently marked for a high voltage hazard and may also be interlocked if a direct shock hazard exists. ERL equipment uses high voltage power supplies and each set-up is reviewed by the ASSRC before being energized.
2. High Current - In the range of 10-50 mA passing through the body significant physical harm may occur. The RF systems, as well as various pulsed magnets, kickers, and other devices, use potentially lethal power supplies. All such power supplies are properly marked; interlocks actuated on entry to the supply are hard wired to the power source; panel indicator lights show the power supply status; local-remote lockout switches are provided where more than one turn-on location is used. Shorting devices are provided, manual or automatic, especially on capacitor storage devices.

High Current, Low Voltage

Many devices use high currents, up to several thousand amperes, at relatively low voltages. In most cases the shock hazards are low but a short circuit on the lines, just as in the 480 V AC case, can lead to excessively high temperatures. Training, proper warnings, enclosing of conductors and interlock devices are used.

RF Voltages

RF voltages in the many kilovolt level are present in the accelerating system. Contact can result in shock and deep RF burns. The procedures as in the high voltage DC case are used.

4.4. Fire Hazards

The primary combustible loading at Prototype ERL consists of magnets, power and control cables, and beam diagnostic equipment. None of the materials is highly flammable, and with the possible exception of small amounts of control cable, all are expected to self-extinguish upon the de-energizing of electric power. Small amounts of flammable materials such as cleaning fluids may be routinely used in support of Prototype ERL maintenance. These materials will be purchased and controlled in accord with BNL's Chemical Management System, and stored in accord with SBMS Subject Area requirements.

Due to a system for diversion of radioactive liquid effluent to a hold-up pond, there are no environmental impacts due to release of contaminated water from the fire protection water

system. Water sprayed on potentially radioactive equipment may become slightly contaminated but would enter the sanitary system and be monitored before release. There are no significant amounts of combustible activated materials in the Prototype ERL and no significant radioactive particles would be present in smoke. Thus, there is no significant environmental hazard from a fire at the Prototype ERL.

To mitigate Prototype ERL fire hazards the systems are designed to industry codes and standards, there is fusing, limits exist on flammable gas volumes, there is fire detection, smoke detection alarms, sprinklers, control of combustible loading, ventilation systems, safety committee reviews, training for emergencies, control of ignition sources, and enhanced work planning.

4.5. Industrial Hazards

Standard industrial hazards such as lasers, vacuum and pressure, magnetic fields, cryogens, chemicals, and mechanical hazards are controlled by following the appropriate requirements in the BNL SBMS Subject Area.

4.6. Hazard Controls

The purpose of this section is to briefly summarize the various system features and administrative programs that help to control hazards or minimize risk of various hazards. It is noted that there are no credible offsite consequences from any Prototype ERL operations. Only workers or the environment are exposed to potential hazards.

4.6.1. Radiation Hazard Controls

The significant hazard at Prototype ERL is ionizing radiation, and operations are planned to be within DOE dose guidelines. The Department uses a graded system of controls such as shields, fences or barriers, locked gates, interlocks and procedures to match access restrictions with potential radiation hazards that satisfies both the BNL and DOE requirements.

Although the Laboratory site is a limited access site, service personnel from off-site or BNL non-radiation workers may work near ERL or may traverse the complex. The BNL policy is to administratively restrict the dose to 25 mrem per year to such personnel. The C-AD adheres to this policy by using shielding, postings, radiation monitoring devices that prevent radiation levels from exceeding set points, radiation work permits, work planning and RS LOTO.

Shielding for Prototype ERL is also designed to permit access by appropriately trained personnel to areas adjacent to the accelerator cave even with credible inadvertent beam loss.

There are restrictions on access for specific Prototype ERL facility areas. Access into the machine area is prevented by dual interlocks when the machine is operational. This includes the operation of the electron beams, the RF-Gun and 5-cell cavity. Personnel access to the roof is administratively prohibited during operations. Personnel are not allowed in the 1 MW Klystron power supply room during operations. A substantial area between the adjacent experimental

building and the Prototype ERL shielding on the west side is fenced and locked with personnel excluded during operations or with limited access.

4.6.1.1. Permanent Shielding and ALARA Dose

Shielding is used to reduce radiation levels in occupied areas to acceptable levels. The C-AD's shielding policy is given in Appendix 3, Shielding Policy. Potential access points to the Prototype ERL cave where personnel are prohibited during operations will be controlled by the Access Control System and the use of chicanes.

Shielding design analyses were performed for Prototype ERL, and ALARA was integrated into the overall facility design. Soon after beam is available, studies will be conducted at low power in order to verify the design and to optimize shielding, as needed, to help achieve an ALARA dose to personnel. Extensive radiation surveys of normal operations, as well as low-intensity simulated, credible beam faults, are conducted as required during commissioning, initial operations and for future, approved modifications. These surveys provide assurance and verification of the adequacy of the shielding and access controls. It is noted that the permanent shielding and access controls are configured to support the BNL Radiation Control Manual dose limit requirements, and are further enhanced to support the BNL Radiation Control Manual ALARA considerations.

The shield was planned with ALARA in mind such that, during normal operations, the dose rate on accessible outside surfaces of the shield is planned to be less than 0.25 mrem/h in

areas under access control. Areas under access control are all designated Controlled Areas or radiological areas as defined in the BNL Radiation Control Manual. The design of 0.25 mrem/hr is a guideline based on the actual ALARA design objective of less than 500 mrem per year. That is, assuming 100% occupancy at the shield face, a 2000-hour per year residence time yields an acceptable ALARA design objective of 500 mrem. The 500 mrem per year ALARA design objective is one half the design objective stated in 10CFR835 § 835.1002 (b).

Since there are many ways to control access and residence time by area designation, training, signage and work planning and since there is a decrease of dose rate with distance from the shield face, significantly higher shield face dose rates are acceptable. Therefore, shields are evaluated in terms of the guideline of 0.25 mrem/h, and instances where higher values may be acceptable have barriers and postings to indicate where area designations play a major role in minimizing radiation exposures.

The permanent bulk shielding materials used at Prototype ERL are primarily materials used at all existing accelerator facilities. For example, concrete and iron provide protection for personnel outside the accelerator cave and Klystron room. In addition to the materials mentioned above, paraffin, borated paraffin, polyethylene, borated polyethylene and Pb may be used for local shielding and in special circumstances, along with appropriate fire safety and industrial hygiene controls. Shielding configuration is closely controlled and may not be changed without review and approval of the C-AD RSC.

4.6.1.2. Radiation Detection and Radiation Interlocks

At locations external and/or adjacent to the Prototype ERL cave where unlikely but possible beam loss may occur, the use of hard-wired, fail-safe interlocking radiation monitors are used. This technique is standard practice at DOE accelerator facilities to maintain radiological-area classification compliance by providing a robust and rapid beam inhibit if any monitor exceeds a preset interlock limit. These radiation monitors are part of the QA level A1 safety-significant access-control-system for personnel protection.

Interlocking radiation monitors at C-AD are calibrated annually. These radiation monitors have been dubbed Chipmunks. They are tissue-equivalent ionization chambers that measure dose equivalent rate, in mrem per hour, from pulsed, mixed-field neutron and gamma radiation. In the ionization chamber, total ionization from a single radiation interaction event is collected. From this ionization, the Chipmunk circuitry produces one pulse for every pico-Coulomb of charge. If the circuit is overdriven, then the circuit produces a continuous train of pulses. This feature prevents the Chipmunk from jamming at very high dose rates. The range of the Chipmunk is about 1 mrem/h to 100,000 mrem/h. Chipmunks that are used as area-radiation monitors for personnel protection are located in accessible areas of the Prototype ERL facility as determined by the C-AD RSC. Chipmunks interlock the electron beam should radiation levels exceed limits defined by the C-AD RSC. The operation of Chipmunks with interlocking capability is fail-safe. Loss of power results in beam off for interlocked Chipmunks, and/or an alarm in the Prototype ERL Control Room adjacent to Building 912, a control room that is continually manned during routine operations. Additionally, the Chipmunk uses a built-in keep-

alive radiation source to monitor for failures. Such a failure will trigger an alarm in the Prototype ERL Control Room and/or an interlock when appropriate.

The interlock system is hard-wired and uses relay logic or PLCs to activate or deactivate a device or a magnet power supply to prevent beam from entering the fault area when a fault condition is detected. These systems are monitored by an independent computer, and the fault condition is logged.

Fixed-location area-radiation monitors such as Chipmunks also provide real-time dose information in B912. This dose rate data is logged every few minutes and stored on computers. General locations are initially selected for the real-time monitors; exact locations are determined based on beam-loss tests conducted during the Prototype ERL commissioning phase and on subsequent radiation surveys during operation. Final area radiation monitoring instrument locations are approved by the C-AD RSC.

Additional area monitors may be used to assess the long-term integrated dose in areas accessible to the public and other individuals not wearing personnel dosimeters. TLDs identical to those worn by radiation workers are mounted in locations in accordance with the BNL Radiological Controls Division procedures for this purpose. The dose recorded by these TLDs is indicative of the exposure of a person spending full time at that location. Neutron dosimeters, if their use is indicated for this purpose, will be attached to phantoms to simulate use by personnel.

4.6.1.3. Control of Radioactive Materials and Sources

When the electron beam is turned off, the remaining radiation hazard comes from activated material and sources. Activation of materials is expected to be either non-existent or insignificant at Prototype ERL. Activated material may be a direct radiation hazard, and may have removable contamination. All known or potentially activated items will be treated as radioactive material and handled in accordance with BNL Radiation Control Manual requirements. Unlabeled radioactive material that is accessible to personnel is placed in appropriately posted radiological area. Unless permitted by procedure, suspect radioactive material is surveyed by a qualified Radiological Control Technician (RCT) before release and then controlled in accordance with the survey results. Known radioactive materials are appropriately labeled before removal from an area that is posted and controlled. Radioactive items with removable contamination on accessible surfaces are packaged before removal from posted radiological areas. Workers whose job assignment involves working with radioactive materials receive documented training as radiological workers. Sealed radioactive sources below BNL accountable-activity-limits are treated as radioactive material. Accountable sealed radioactive sources are controlled, labeled and handled in accordance with the BNL SBMS Subject Area and the C-AD OPM. Accountable sealed radioactive sources that are in regular use are inventoried and leak-tested every six months.

4.6.1.4. Portable Radiation Monitors

Portable radiation detection instruments are used by RCTs and, potentially, other trained and approved C-AD personnel, to measure the radiation fields in occupied areas during commissioning and periodically during normal operations. The measurements made by RCTs will be used to establish and confirm area radiological postings. Instruments used for this purpose will be appropriate for the type and energy of the expected radiation, and will be calibrated in accordance with BNL requirements.

Experience at the C-AD accelerators and experiments have shown that contamination is not a significant problem at our facilities. Prototype ERL contamination is not expected, however, routine contamination surveys are conducted to verify that contamination is not a problem. Instruments used to frisk personnel who are exiting posted areas that might contain removable contamination are used as appropriate.

4.6.1.5. Personnel Dosimetry

All radiation workers wear appropriate TLDs and self-reading dosimeters as required by the BNL Radiation Control Manual while working in areas posted for radiation hazards. Dosimeters are exchanged on a regular basis and processed by a DOELAP-accredited laboratory. Records of the doses recorded by these dosimeters are maintained, and these records are available to the monitored individuals.

4.6.1.6. Access Controls Systems

The radiation security system design for access controls at ERL is classified as QA level A1 according to the C-AD QA plan, but the Department allows certain components to have a lower classification because failure is to a safe state or critical parts are redundant. The Access Controls Group installs industrial grade components only. This Group labels parts that pass incoming tests as A1 or A2 and places labeled parts in controlled storage areas. The Group maintains documentation for these acceptance tests.

The basic design principles of the access control system are:

- Either the beam is disabled or the related security area is secured
- Only wires, switches, relays, PLCs and active fail-safe devices, such as chipmunks, are used in the critical circuits of the system
- The de-energized state of the relay is the interlock status; that is, the system is fail-safe
- Areas where radiation levels can be greater than 50 rem/h require redundancy in disabling the beam and in securing the radiation area
- If a beam fails to be disabled as required by the state of its related security area, the system has backup or reach-back

Very High Radiation Areas are those areas that enclose primary beam. Very High Radiation Area hardware requirements comply with the BNL Radiation Control Manual. The C-AD RSC requires:

- Locked gates with two independent interlock systems
- Fail safe and redundant radiation monitors or other sensing devices
- Indicators of status at the facility in the Prototype ERL control room
- Warning of status change
- Emergency stop devices within potential Very High Radiation Areas

The C-AD RSC reviews interlock systems for compliance with requirements in the BNL Radiation Control Manual, SBMS requirements and C-AD OPM procedures. A Representative of the BNL Radiological Controls Division is a member of the C-AD RSC. The C-AD RSC defines the design objectives of the security system and approves the logic diagrams for relay-based circuits and state tables for PLC-based circuits. Cognizant engineers sign-off on wiring diagrams and the C-AD Chief Electrical Engineer approves each diagram. The C-AD Access Controls Group maintains design documentation.

The Access Controls Group conducts a complete functional check of all security system components at an interval required by the BNL Radiological Control Manual. In the checkout, the Access Controls Group checks the status of each door-switch on a gate, and each crash switch in the circuit. They check the interlocks and the off conditions for all security-related power-supplies to magnets and magnets that may act as beam switches. They check every component in a security circuit. As they test, they fill-out, initial and date the security system test-sheets obtained from the C-AD OPM. Test records are maintained as required by the C-AD OPM.

4.6.2. Control and Use of Hazardous Materials

The BNL Subject Area on Working with Chemicals is designed to ensure that workers are informed about the chemical hazards in their workplace. The Subject Area is maintained to comply with OSHA and EPA regulations concerning hazardous chemical communications. The BNL Subject Area on Working with Chemicals includes provisions for policy, training, monitoring exposure limits, handling, storing, and labeling and equipment design, as they apply to hazardous materials. Inclusive in the hazardous material protection program will be: procurement, usage, storing, inventory, access to the hazardous materials, use of appropriate Personal Protective Equipment (PPE), as well as housekeeping and chemical hygiene inspections of C-AD facilities. All BNL general employees receive appropriate general Hazard Communication training. Standards for general hazardous materials communication are specified by the BNL SBMS. Training to these standards is provided, and the training program records are maintained on the Brookhaven Training Management System (BTMS). C-AD staff working in ERL areas with a potential for exposure to hazardous chemicals receive appropriate job-specific training at the time of initial assignment and whenever a new hazard is introduced into the work area. A comprehensive listing of all Materials Safety Data Sheets for the chemicals used at the BNL site is available on the BNL web;[36] a goal is to have all chemicals accounted for in the BNL Chemical Management System (CMS). The system of work controls, which is part of the BNL ISMS, requires enhanced work planning for work with certain hazardous materials. The enhanced work planning ensures that adequate hazard controls and completion of required training are in place before work with hazardous materials begins.

[36] http://intranet.bnl.gov/esh/cms/

The use of flammable liquids is minimal. Light industrial chemicals may be in use such as acetone, ethyl alcohol that is used as general cleaning solvent, glass cleaner, PVC cement that is used for insulation work, and spray paint. Any use of flammable liquids follows BNL SBMS requirements.

4.6.3. Electrical Safety

The requirements for electrical safety are given in detail in the BNL SBMS and the C-AD OPM. Electrical bus work is covered to reduce/prevent electrical hazards in the power supply areas. In the Prototype ERL cave, exposed conductors will not be present and magnet buss is covered. In Controlled Access mode, even though the magnets will not be powered, the power supplies will not be locked out. Workers are trained to assume that magnets are powered in all cases and to treat them accordingly. In cases where workers are required to work on or near a specific magnet during Controlled Access or Restricted Access, the magnet power supply will be locked out and tagged out by the worker.

In some cases, it will be necessary to work near magnetic elements while powered. Appropriate control over access during this mode is maintained by the Prototype ERL Operations Supervisor. Work planning, Working on or Near Energized Conductor Permits and training requirements for entrants under these circumstances address concerns for inadvertent contact with powered conductors and exposure to magnetic fields.

4.6.4. Lockout/Tagout Program

Lockout/tagout procedures are specified in the C-AD OPM. All workers will be required to train in lockout/tagout procedures at a level consistent with their position. Where electrical hazards could be present to C-AD personnel working in an area, lockout/tagout procedures are implemented only by trained and LOTO authorized personnel.

Breaker/disconnect operations as part of the LOTO follows the electrical PPE requirements of the BNL SBMS subject area, Electrical Safety, which is equal to or more restrictive than NFPA 70E in order to prevent injury from arc flash accidents.

4.6.5. Safety Reviews and Committees

Standing safety committees are utilized throughout design, construction, commissioning and operation to focus expertise on safety, environmental protection, pollution prevention and to help maintain configuration control. See Chapter 3 for details of each committee's authority and responsibility.

4.6.6. Training

Worker training and qualification is an important part of the overall ESH plan for he C-AD. Training and qualification of workers is described in the Operations Procedures Manual

and the required training for individuals is defined in the BTMS. All staff personnel and experimenters require an appropriate level of training to ensure their familiarity with possible hazards and emergency conditions.

Workers are trained in radiation and conventional safety procedures at a level consistent with their positions. The number and type of training sessions/modules is assigned using a graded approach commensurate with the staff members' responsibilities, work areas, level of access, etc. An up-to-date record of worker training is kept in the BTMS database. Radiation worker access will only be allowed if adequate training is documented, except in cases of emergency. Training procedures and course documentation will be reviewed and updated periodically.

4.6.7. Personal Protective Equipment

Special clothing is used to protect workers who are exposed to the various electrical hazards and hazardous materials, including chemicals and radiation. The clothing for a particular application is selected considering the expected hazards; a variety of types of clothing is needed to meet all hazards. There are no predicted hazards that are unique to C-AD facilities; experience and compliance with DOE 10CFR851 ensure the adequacy of protective clothing in a particular application.

Respiratory protection is provided for workers who might otherwise be exposed to unacceptable levels of airborne hazardous materials, including chemicals, oxygen deficient atmospheres and radioactive materials. Respiratory protection is selected, used and maintained per OSHA 29CFR1910.134 and BNL Respiratory Protection Procedures.

4.6.8. Significant Environmental Aspects and Impacts

In support of BNL's broad mission of providing excellent science and advanced technology in a safe, environmentally responsible manner, the C-AD is committed to excellence in environmental responsibility and safety in all C-AD activities, including Prototype ERL operations and maintenance.

To provide excellent science and advanced technology in a safe and environmentally responsible manner the C-AD has, over the past 20 years, continuously reviewed the aspects of its operations in an effort to identify and accomplish waste minimization and pollution prevention opportunities. This process began in 1988 with the development of formal environmental design guides and a design review process. More recently, this effort has resulted in a further formalization of its processes under the guidelines of ISO 14001, the BNL ISO 14001 "Plus" Environmental Management System Manual, and SBMS subject areas governing ISO 14001 implementation. The BNL EMS program emphasizes compliance, pollution prevention and community outreach. Based on the aspect identification and analysis process in

the Subject Area, Identification of Significant Environmental Aspects and Impacts, the following aspects are examples of significant aspects at the Prototype ERL:

- Regulated industrial waste
- Hazardous waste
- Radioactive waste
- Atmospheric discharge
- Liquid effluents (not expected to be radioactive)
- Storage/use of chemicals or radioactive material
- Soil activation (not expected to be significant)

The environmental policy as set forth by BNL in the Environmental, Safety, Security and Health Policy is the foundation on which the C-AD manages significant environmental aspects and impacts. The formal management program is called the C-AD Environmental Management System. The Environmental Management System details may be found in the C-AD OPM.[37]

The process evaluations are documented in C-AD OPM Chapter 14. Waste streams are reviewed by the C-AD Environmental Compliance Representative (ECR) and a process evaluation denoting all material inputs and outputs for the each process of Prototype ERL is on file for existing processes. While waste streams at Prototype ERL will be the same as for other accelerators in the C-AD complex, although in much less quantity, a new process evaluation is performed for each new, significant process at Prototype ERL before use.

[37] http://www.rhichome.bnl.gov/AGS/Accel/SND/OPM/Ch01/01-10-02.PDF Environmental Management Program Description Collider-Accelerator Department and Superconducting Magnet Division

4.6.9. Hazard Reduction Associated with Waste Generation and Handling

Hazards associated with handling, packaging, treating and disposing of wastes generated during operation and modification of the facility are reduced when the generation of these wastes is minimized via pollution prevention (P2) techniques. The BNL approach to P2 associated with the operation and modification of accelerators and experiments is to address it during the design and construction phase. The objective is to minimize or eliminate the anticipated costs associated with hazardous and mixed waste generation as well as the treatment and disposal of wastes and the consumption of resources in all ERL life cycle phases: construction, operation, closure and decommissioning. Dollars spent during the design phases will provide for significantly reduced total costs over the life of the facility thus making more funds available for science. The following are the main objectives of the BNL P2 program:

- Minimize the amount of hazardous, radioactive and mixed wastes that are generated
- Minimize the cost of waste management
- Comply with federal, state and local laws, executive orders and DOE orders

The C-AD has implemented a P2 program as part of its commitment to comply with the Environmental Management System and ISO 14001. C-AD facilities have been registered to the ISO standard by a third party registrar since CY 2000. Modifications to C-AD operations have helped minimize hazards and costs associated with the generation of waste streams.

4.6.10. Fire Detection, Egress, Suppression and Response

The basis of design for fire detection, egress, suppression and response has been determined by coordination with the BNL Fire Protection Engineer (FPE) and an outside consulting group. FHAs are on the C-AD website. C-AD facilities comply with DOE fire protection guidelines as well as NFPA standards, or else have approved exemptions from the local Authority Having Jurisdiction (AHJ), which is the BNL Fire Safety Committee. The system is integrated with the site-wide system and is comprised of an automatic fire detection and suppression system that includes automatic fire suppression and rapid response capability coverage by the BNL Fire Department. Sprinklers are not provided at the Building 912 ceiling or roof levels, but rather at intermediate levels and at or within enclosures, as required. Because of the low flammability of the magnets, power cables, control cables and beam diagnostic equipment, they do not have automatic fire suppression systems, except for certain areas where significant risk of programmatic disruption exists. Manual and automatic fire detection and alarm initiation devices are installed throughout the facility. Where needed, smoke and/or heat detection devices are supplemented with pressure sensitive sensors, flammable gas detectors or other advanced detection devices such as high sensitivity smoke detection (HSSD). The appropriate portable fire extinguishers are provided for manual fire fighting efforts by trained staff. Fire alarms are alarmed at the BNL Fire Department, Building 599, and at BNL Police Headquarters, Building 50, thus providing continuous coverage for rapid fire response. This will put additional professional fire fighting resources into action within a short period. Roadways around the facility help protect it from surrounding wildfires. The buildings' roofs are non-combustible metal and do not ignite from burning ash from brush fires.

The means of egress for occupants is in accordance with NFPA 101. Enclosure exhaust fans are located within the ERL ring enclosure and may be used for rapid smoke removal.

4.6.11. Routine Credible Failures

Routine credible challenges to controls associated with worker and experimenter protection and with environmental protection are further detailed in Appendix 6, Qualitative Risk Assessments.

Beam losses at Prototype ERL are sufficiently attenuated by the bulk shielding for expected routine operation. Adequate shielding is provided to meet requirements established by the Laboratory for permissible exposure to radiation workers, non-radiation trained workers and members of the public during normal machine operations. Present Prototype ERL shielding designs reduce all normal radiation levels to well below the DOE ALARA guidelines.

Exposure to nearby facilities from Prototype ERL operations is less than 25 mrem per year and only a small fraction of the permitted 5 mrem per year at the site boundary, which are the Laboratory guidelines for radiation exposure for nearby facilities and the site boundary, respectively. Radiation exposure to maintenance workers is reduced through the design of equipment to simplify maintenance and the selection of materials to minimize failures. Through such reviews, maintenance activities will be controlled to maintain radiation exposures well

within the DOE annual limits, limits that are 5 to 20 times higher than the Department's ALARA guidelines.

There are no significant quantities of dispersible gaseous or liquid radioactive materials produced at Prototype ERL. Operations personnel are trained to confine, clean up and report all water spills to management. Experience indicates that periodic leaks may occur onto the concrete floor. Spilled water is sampled before release to the appropriate waste stream or is allowed to safely evaporate in place. No offsite threats to the public are present.

4.7. Evaluation of Potential Impacts to Workers, Public and Environment

The routine radiation dose to workers is well below the regulatory limits. Worker exposure to other industrial hazards such as oxygen deficiency hazard is controlled such that potential injury is improbable. Due to the short range of the radiations, the risks to the public are zero.

Worker radiation doses, even including the maximum credible beam fault dose on a frequent basis, would not cause deterministic effects such as burns or tissue damage unless an individual were in the beam enclosure during operations. The ACS, which is categorized as Safety-Significant, assures that such irradiations are not credible.

Cooling water spills are unlikely due to adherence to ASME codes and consensus design standards. Due to the lack of chemicals and dispersible radioactivity, operation of the Prototype ERL facility is anticipated to have virtually no impact on the environment.

4.8. Selection of Control Measures that Reduce Risks to Acceptable Levels

Credited controls have been selected to favor reliance on passive over active design features and to favor engineered controls over administrative controls. Mitigation of risks associated with the Prototype ERL facility is largely achieved with passive design features. The configuration of the Prototype ERL facility meets the C-AD mission of producing an intense source of pulsed electrons while satisfying safety requirements, foremost of which is the attenuation of prompt and secondary radiation. The passive shielding built into the Klystron, ring enclosure, and certain Prototype ERL structures (e.g., beam stop) was designed to passively reduce penetrating radiation to levels that are ALARA and to allow unencumbered access by users and staff in areas routinely occupied by personnel.

Active credited engineered controls are employed as needed to protect workers and users from radiation exposure, ODH and the equipment from extensive fire damage. For example, the ACS provides beam trips in response to access violations into hazardous areas or detection of elevated radiation levels in certain potentially occupied areas. Another example of an active engineered control is the ring enclosure ventilation system that activates upon ODH alarms. An example of engineered equipment protection is the sprinkler system. Proper function of active controls is ensured by required surveillance/maintenance requirements specified in the ASE.

Certain credited administrative controls have also been identified. To a large extent, required administrative controls are addressed by ISM programs already well established and maintained at BNL (e.g., radiation protection, electrical safety, etc.). Administrative controls specific to Prototype ERL are addressed by ASE requirements to ensure their safety function is maintained.

4.9. Listing of All Credited Engineered and Administrative Controls

Table 4.9.a Summary of Credited Engineered Controls

	Credited Engineered Control	Applicable Events
1	Chipmunk-interlocked beam cutoff on abnormal radiation levels	Table A.6-4 Qualitative Risk Assessment – Radiation External to Enclosure
2	Access-controlled gates	Table A.6-4 Qualitative Risk Assessment – Radiation External to Enclosure
3	Ionizing radiation shielding	Table A.6-4 Qualitative Risk Assessment – Radiation External to Enclosure
4	Fire detection and suppression systems	Table A.6-11 Qualitative Risk Assessment – Fire
5	ODH monitoring system	Table A.6-12 Qualitative Risk Assessment – Oxygen Deficiency Hazards (ODH)
6	ASME rated pressure relief valves and burst disks, ASME compliant pressure vessels and piping or equivalent	Table A.6-7 Qualitative Risk Assessment – Conventional/Industrial Hazards
7	Remote sub-station ground-fault monitoring system	Table A.6-3 Qualitative Risk Assessment – Electric Shock/Arc Flash

Table 4.9.b Summary of Credited Administrative Controls

	Credited Administrative Control	Applicable Events
1	Review of radiation safety by C-AD RSC	Table A.6-4 Qualitative Risk Assessment – Radiation External to Enclosure
2	Configuration controlled ACS drawings and computer codes; annual ACS testing	Table A.6-4 Qualitative Risk Assessment – Radiation External to Enclosure
3	Configuration controlled shield drawings and calculation codes	Table A.6-4 Qualitative Risk Assessment – Radiation External to Enclosure
4	Annual fire detection and suppression system tests	Table A.6-11 Qualitative Risk Assessment – Fire
5	ODH monitor calibrations	Table A.6-12 Qualitative Risk Assessment – Oxygen Deficiency Hazards (ODH)
6	Relief valve and burst disk maintenance according to ASME standards	Table A.6-7 Qualitative Risk Assessment – Conventional/Industrial Hazards
7	Ground-fault alarm testing	Table A.6-3 Qualitative Risk Assessment – Electric Shock/Arc Flash

4.10. Description of the Maximum Credible Incident

The maximum credible incident is the incident in terms of property loss or injury to personnel that would result assuming all installed safety systems functioned as designed.

4.10.1. Maximum Credible Fire Incident

The objectives of presenting no threats to the public health and welfare or undue hazards to life from fire are satisfied. The designs of all C-AD facilities comply with the "Life Safety Code" (NFPA 101) and NYS Building Code and with the specific requirements of the

Occupational Safety and Health Standards (CFR29, Part 1910) applicable to exits and fire protection.

Welding gases and flammable/explosive gases are used and stored according to NFPA codes and standards applicable to experimental installations. Gases are stored in compressed gas cylinders that meet Department of Transportation (DOT) specifications. Large quantities of gas are forbidden in accelerator areas. There are no off-site threats to the public should a cylinder fail.

The facility is designed with an "improved risk" level of fire protection. The design requirements that were used are found in: 1) DOE Order 420.1, Facility Safety and 2) DOE Order 6430.1A, General Design Criteria. Prototype ERL is fitted with fire detectors and fire protection systems where appropriate. Fires are expected to be extinguished by these protective systems. Combustible loading in the Prototype ERL beam cave and other power supply areas consists of magnets, power cables, control boards, control cables and beam diagnostic equipment. None of the materials are highly flammable, and with the possible exception of small amounts of control cable and circuit boards, all are expected to self extinguish upon de-energizing of electric power. Induced radioactivity is deeply entrapped in concrete shielding and is not dispersible in a fire. There are no offsite threats to the public from a fire.

The personnel risks associated with the fire hazard are acceptable considering the type of building construction, the available exits, the fire detection systems, the fire alarm systems and

the relative fire-safety of the components and wiring. Emergency power and lighting is available in accordance with fire industry standards.

Travel distances to exits at Prototype ERL do not present a problem. In structures of low or ordinary hazard and in structures used for general or special industrial occupancy, NFPA 101 permits travel distances up to 120 m to the nearest exit if the following provisions are provided in full:

- Application is limited to one-story buildings only
- Interior finish is limited to Class A or B materials per NFPA definitions
- Emergency lighting is provided
- Automatic sprinklers are provided in accordance with NFPA 101 or exempted by the local AHJ
- Extinguishing system is supervised

Smoke and heat venting by engineered means or by building configuration are provided to ensure that personnel are not overtaken by spread of fire or smoke within 1.8 m of floor level before they have time to reach exits.

DOE has established limits of $1,000,000 for a Maximum Possible Loss and $250,000 for a Maximum Credible Loss mandating the installation of automatic suppression systems in locations where those limits are exceeded. Prototype ERL design meets these criteria. It is noted

that Prototype ERL is an experimental facility with a limited life time that allows judgment by the AHJ in determining the fire protection requirements.

Based on previous experiences at C-AD, the predominant sources of fire initiation have come either from electrical malfunctions or overheating in beam-line components such as magnets, which have caused a break down of the electrical insulation and subsequent arcing. The maximum credible fire incident was determined by the AHJ to be a fire in one magnet and damage to the two adjacent magnets. While the klystron's 100 kV transformers have 800 gallons of oil, it was felt that smoke detectors, interlocks to turn off power to the 100 kV transformers, fire sprinklers, low-flammability oil in the transformers, secondary containment and onsite fire responders would result in a less credible fire incident.

4.10.2. Maximum Credible Electrical Accident

The electrical systems and equipment in use at Prototype ERL is the same as that in use at C-AD facilities for many years. This statement does not minimize the inherent dangers; rather, it indicates that the technical personnel are experienced on accelerator circuits and devices. Additionally, they are qualified to work on these systems. Every engineer, technician and electrician that is expected to work on the facility equipment is adequately trained. The training includes an awareness of potential hazards and knowledge of appropriate safety procedures and emergency response plans. Training is documented and a list of authorized personnel is kept on a network electronic database (BTMS) and is available to supervisors.

The C-AD staff is familiar with the types of electrical hazards that relate to the accelerators and experimental areas. All required safety features are installed in and on the electrical equipment. The groups that maintain, repair, test and operate the equipment have the knowledge, tools and experience to perform safely. Work planning, which includes electrical safety procedures, working on or near energized conductor permits and, when required for high hazard work, job safety analyses is done to adhere to the safe practices mandated by OSHA and the BNL SBMS Subject Area on Electrical Safety. Periodic retraining improves the safety margin. Thus, the potential risk for a serious electrical shock is minimized to levels currently accepted throughout the industry.

4.10.3. Risk Assessment to Workers, the Public and the Environment

4.10.3.1. Radiation Risks

The routine radiation dose to workers is well below the DOE regulatory limits of 10CFR835. The range of doses received by C-AD radiation workers in FY2007, which was a typical recent year with the RHIC nuclear physics program, was from zero to ~60 mrem. Experience shows the average exposure of C-AD radiation workers is close to zero mrem during the RHIC nuclear physics program. The dose to an average C-AD radiation worker is only a small fraction of the regulatory limit, and the increase in fatal cancer risk after a lifetime of radiation work, 50 years, is insignificant, <<0.06%[38] compared to the naturally occurring fatal cancer rate of nearly 20%. Additionally, data shows the radiation burden for the C-AD worker

[38] This assumes a risk coefficient of 4×10^{-4} per rem for workers from NCRP Report No. 115, Risk Estimates for Radiation Protection (p. 112) and a 50-year career at 30 mrem per year.

has been declining for the past four decades. The risks to the public are an extremely small fraction of worker risk.

Worker doses at Prototype ERL, even including the maximum credible beam fault dose on a frequent basis, would not cause deterministic effects such as burns or tissue damage unless an individual were in the Prototype ERL accelerator cave during operations. The ACS, which is categorized as Safety-Significant, assures that such irradiations are not credible.

4.10.3.2. Environmental Risks from Radiation

There are no credible risks to the environment from groundwater contamination caused by Prototype ERL operations. Any spill of the insignificant levels of radioactive cooling water from a failed pipe or hose would have no environmental impact.

4.10.3.3. Fire Risks

Based on the extensive use of fire protection as determined by the BNL Fire Protection Engineer, the appropriate location of exits and the use of emergency ventilation exhaust systems, high or medium consequence levels are extremely unlikely. Thus, the fire risk is acceptable.

4.10.3.4. Electrical Risks

Based on the use of formal C-AD electrical safety procedures, working on or near energized conductor permits and, for high hazard work, job safety analyses, high or medium consequence levels are extremely unlikely. Thus, the risk is acceptable.

4.10.4. Professional Judgment Issues

The initial screening of Prototype ERL hazards was performed using qualitative engineering judgment. The C-AD engineering, operating and safety staff has many years of experience with BNL accelerators and experiments. This experience influenced the analyses of Appendix 2.

Experience has also influenced the choice of conservative maximum hourly routine and faulted beam power limits which have been used as the bases for the shielding and ALARA analyses. These judgment issues have always been and will continue to be verified by beam fault studies.

4.10.5. Methods Used in Evaluation of Radiological Hazards

Techniques employed in the evaluation of radiological hazards include the use of empirical formulae and graphs[39] and the Monte Carlo Program MCNPX[40]. MCNPX is probably the most widely used transport Monte Carlo code.

Past radiation dose rate measurements at C-AD accelerators have been made which show that dose equivalent and activation calculations are overestimates and should be regarded as upper limits.[41]

[39] NCRP Report No. 144, Radiation Protection for Particle Accelerator Facilities
[40] L. S. Waters, Ed., "MCNPX USER'S MANUAL," LANL Report TPO-E83-UG-X-0001, (1999). See also H.G. Hughes, R.E. Prael, R.C. Little, "MCNPX – The LAHET/MCNP Code Merger," X-Division Research Note, 4/22/97. The version number of the code used in this note is 2.1.5.
[41] A.J. Stevens, "Summary of Fault Studies at RHIC." BNL C-A Dept ES&F Note 156 (2000). http://server.c-ad.bnl.gov/esfd/epstechnote.html

5.Basis for Accelerator Safety Envelope

Limits for safe operations are captured in the Accelerator Safety Envelop (ASE). The ASE summarizes specific limits for hazards not routinely encountered in an industrial operation, which in this case is ionizing radiation. In addition, the ASE summarizes limitations, in a general way, derived from federal regulations or acts, DOE Orders and consensus standards (e.g., DOE Order 420.2B, OSHA, NEPA, 10CFR851, 10CFR835 and NFPA codes).

Two documents were used as references to guide the format of the ASE and they were: BNL's template[42] and DOE's Accelerator Facility Safety Implementation Guide.[43] Page 28 in the DOE Guide, item vii, discusses alternative requirements that may be specified in an ASE, and the need for procedures to implement these alternatives if used. The suitability of alternatives applicable to the Prototype ERL ASE was determined by LESHC and by the BNL Fire Protection Engineer for accelerators at C-AD.[44] With regard to the use of 12 to 15-month intervals in the ASE, this issue was reviewed by the Radiation Protection Working Group,[45] and later documented in the BNL RadCon Manual to be at the discretion of the BNL Radiation Safety Officer.

The ASE formally establishes the set of bounding conditions on engineered and administrative systems, within which the C-AD proposes to operate the Prototype ERL. These bounding conditions are based on the safety analysis documented in Chapter 4 of the SAD. The

[42] https://sbms.bnl.gov/sbmsearch/subjarea/40/40_Exh3.cfm?ExhibitID=6366
[43] http://www.rhichome.bnl.gov/AGS/Accel/SND/420Guide/Accelerator%20Safety%20Order%20Guide%20FY05.pdf
[44] See Meeting 03-01 at http://www.rhichome.bnl.gov/AGS/Accel/SND/past_leshc_business.htm
[45] http://www.rhichome.bnl.gov/AGS/Accel/SND/RSC/AnnualInterlockTestingIssue.pdf

ASE assures the validity of the basis set of assumptions used in the safety analysis and helps ensure the physical and administrative controls used to mitigate potential hazards are in place.

DOE requires adherence to the approved bounding conditions of the ASE because it is the authorization basis for all commissioning and operations activities at the Prototype ERL.

The ASE is divided into 5 Sections, and the first and second Sections address ASE administration and the limits for ionizing radiation exposure at the BNL site as a whole. Section 3 addresses specific limits for ionizing radiation and other unique industrial hazards at the Prototype ERL. Specific ASE limits in terms of particle energy and beam power are normally used to address the ionizing radiation hazard. Other specific limits such as protection against loss from fire during periods of beam operation may be found in this section. Finally, ASE limitations in Sections 4 and 5 summarize the practices to be used to limit operational, environmental, safety and health events routinely encountered in an industrial operation.

Strict adherence to the approved bounding conditions in Section 2, 3 and 4 of the ASE is expected during all commissioning and operations activities.

The highest-level information, "Safety Envelope Limits," is documented in Section 2 of the ASE. These are site-wide BNL requirements and they are:

- Less than 25 mrem in one year to individuals in other BNL Departments or Divisions adjacent to an accelerator facility
- Less than 5 mrem in one year to a person located at the site boundary
- Off-site drinking water concentration and on-site potable well water concentration must not result in 4 mrem or greater to an individual in one year

- Less than 1250 mrem in one year to an accelerator facility staff member
- Tritium concentrations in the sanitary sewer effluent less than 10,000 pCi/L
- Radioactive liquid effluent from soil activation is to be prevented
- Airborne effluents must result in emissions less than 0.1 mrem in one year to a person at the site boundary

- Based on the BNL requirements in Section 2, "Corresponding Safety Envelope Parameters" for the Prototype ERL are documented in Section 3. These are critical operating parameters that ensure the Prototype ERL will not exceed the BNL Safety Envelope Limits. These specific parameters are derived from the safety analysis of the SAD.

Authorized alternatives are also defined in Section 3. Authorized Alternatives may be used whenever the Corresponding Safety Envelope Parameter cannot be met. For example, during periods when a fire protection system becomes temporarily inoperable due to a failed smoke detector, one may allow up to 80 hours where compensatory actions may be used. Compensatory actions are prescribed in operating procedures and must have accelerator management approval in order to be implemented.

Section 4 of the ASE specifies the limits applicable to Prototype ERL engineered safety systems requiring calibration, testing, maintenance, and inspection. The frequency of functional testing and calibration of these systems is specified in Section 4.

Section 5 is reserved for administrative controls and is termed “Operations Envelope.” As allowed for in the DOE ASO Guide G420.2-1, July 1, 2005, BNL may establish an

"Operations Envelope" within the ASE, and this is done via Section 5. According to the DOE Guide, an "Operations Envelope" serves to prevent the ASE from being exceeded. Variations of operating parameters within the "Operations Envelope" of the Prototype ERL are considered normal operations. Variation outside the "Operations Envelope" but within the ASE Sections 2, 3 and 4 merits appropriate attention; however, it does not require termination of Prototype ERL activities or notification of DOE.

5.1. Connection between Engineered and Administrative Bounding Conditions and ASE

Radiation shields for the electron gun, beam dump and accelerator ring are adequate to attenuate ionizing radiation from these sources to less than BNL Safety Envelope Limits in the ERL ASE.

Radiation safety interlocks have to be tested and maintained as part of the Access Control System. Interlocks shut down beam and maintain personnel exposures with the BNL Safety Envelope Limits in the Prototype ERL ASE.

Unauthorized accesses through interlocked doors that lead into the accelerator enclosure shut down beam and maintain personnel exposures within the BNL Safety Envelope Limits in the Prototype ERL ASE.

The engineered method to prevent fault levels of radiation outside the shielded enclosure is accomplished by an appropriate distribution of area radiation monitors. Interlocks shut down beam and maintain personnel exposures with the BNL Safety Envelope Limits in the Prototype ERL ASE.

The engineered fire protection system limits in the ASE limit Prototype ERL programmatic loss to a level consistent with the highly protected risk status in private industry, as required in DOE Order 420.1B, Facility Safety.

The calibration, testing, maintenance and inspection limitations in the ASE for the engineered ODH monitoring system, radiation monitoring system, access control system, fire protection system, pressure relief devices and ODH-related ventilation system meet consensus standards and regulatory requirements in 10CFR851 and 10CFR835.

The operations envelop / administrative limits in the Prototype ERL ASE for control room staffing, training and qualification, work planning, configuration control, environmental management and worker safety and health meet requirements in DOE Orders 5480.19, 420.2B, 5400.5, 450.1, 435.1, 420.1B, 414.1C, 243.1 and in 10CFR851 and 10CFR835 and requirements in BNL SBMS Subject Areas.

5.2. ASE Consideration for Routine and Non-Routine Operating Conditions

The ASE has bounding parameters to control beam loss, classify radiological areas, and control access to radiological areas. Beam faults are terminated by radiation monitors. The ASE requires interlocking radiation monitors and routine radiation surveys in occupied areas in order to minimize radiation exposures where practicable. Routine radiological areas, radiological barriers, ALARA and radiological work are further bounded in the ASE by requiring Prototype ERL to meet requirements in the BNL Radiological Control Manual.

6.Quality Assurance

6.1. The Ten Management, Performance and Assessment Criteria of DOE O 414.1C

The criteria below are followed and are further explained in the referenced sections:

- Criterion 1- Quality Assurance Program (see Section 6.2)
- Criterion 2 - Personnel Training and Qualification (see Section 6.3.1)
- Criterion 3 - Quality Improvement (see Section 6.3.2)
- Criterion 4 - Documents and Records (see Section 6.3.3)
- Criterion 5 - Work Processes (see Section 6.3.4)
- Criterion 6 – Design (see Section 6.4.1)
- Criterion 7 – Procurement (see Section 6.4.2)
- Criterion 8 - Inspection and Acceptance Testing (see Section 6.4.3)
- Criterion 9 - Management Assessment (see Section 6.5)
- Criterion 10 - Independent Assessment (see Section 6.6)

6.2. Quality Assurance (QA) Program at Prototype ERL

The C-AD and the Prototype ERL project have adopted, in its entirety, the BNL Quality Assurance Program. This QA Program describes how the various BNL management system processes and functions provide a management approach that conforms to basic requirements defined in DOE Order 414.1C, Quality Assurance.

The quality program embodies the concept of the "graded approach," i.e., the selection and application of appropriate technical and administrative controls to work activities, equipment and items commensurate with the associated environment, safety, security and health risks and programmatic impact. The graded approach does not allow internal or external requirements to be ignored or waived, but does allow the degree of controls, verification, and documentation to be varied in meeting requirements based on risk. Any variation from external safety requirements and consensus standards must be done in accordance with the processes allowed in 10CFR851, Worker Safety and Health Program. The BNL QA Program is implemented within the Prototype ERL project using C-AD QA implementing procedures. These procedures supplement the BNL SBMS documents for those QA processes that are unique to the C-AD. C-AD procedures are maintained in the C-AD Operations Procedures Manual. These procedures establish an organizational structure, functional responsibilities, levels of authority, and interfaces for those managing, performing, and assessing work. They also establish management processes, including planning, scheduling, and providing resources for work.

The C-AD QA philosophy of adopting the BNL Quality Program and developing departmental procedures for the implementation of quality processes within C-AD ensures that complying with requirements is an integral part of the design, procurement, fabrication, construction and operation of the Prototype ERL.

A Quality Representative serves as a focal point to assist C-AD management in implementing QA program requirements. The Quality Representative has the authority,

unlimited access, both organizationally and facility-wise, as personnel safety and training allows, and the organizational freedom to:

- assist line managers in identifying potential and actual problems that could degrade the quality of a process/item or work performance
- Recommend corrective actions
- Verify implementation of approved solutions

All ERL personnel have access to the C-AD Quality Representative for consultation and guidance in matters related to quality.

6.3. QA Activities That Impact Protection of Worker, Public or Environment

6.3.1. Personnel Training and Qualifications

The BNL Training and Qualification Management System within the SBMS supports C-AD management's efforts to ensure personnel working at the Prototype ERL are trained and qualified to carry out their assigned responsibilities. The BNL Training and Qualification Management System is implemented within the C-AD with the C-AD Training and Qualification Plan of Agreement. C-AD provides continuing training to personnel to maintain job proficiency.

6.3.2. Quality Improvement

C-AD has established and implemented processes to detect and prevent problems with the quality of the work and vendor purchases. The Department identifies, controls, and corrects items, services, and processes that do not meet established requirements. ERL staff identifies the causes of problems, and includes prevention of recurrence as a part of corrective action planning. The Department has programs to periodically review item characteristics, process implementation, and other quality-related information to identify items, services, and processes needing improvement.

The BNL Quality Management System, supplemented by C-AD procedures, provides the requirements to identify, document and disposition nonconformance and to establish appropriate corrective and preventive actions that are based on identified causes. The BNL Quality Management System provides guidance for trending nonconformance to recognize recurring, generic or long-term problems.

The decision to initiate quality improvement is based upon an evaluation of the seriousness, and the adverse cost, schedule, safety and environmental impact of the nonconformance relative to the cost and difficulty of its correction. In some cases, corrective action of a nonconformance may not be feasible in the near term, and equivalent protections are used.

The C-AD Self Assessment Program provides information on scientific, business and operational performance for management, staff, customers, stakeholders and regulators associated with Prototype ERL. Self-assessment also provides a mechanism for improving the rules that govern training and qualifications, documents and records, work process, design, procurement, inspection and testing, and the assessment process itself. The Self-Assessment program evaluates performance relative to critical outcomes and internal performance objectives in order to identify strengths and opportunities for improvements.

6.3.3. Documents and Records

The C-AD prepares, reviews, approves, issues, uses, and revises documents to prescribe processes, specify requirements, or establish design for the Prototype ERL. Additionally, the C-AD specifies, prepares, reviews, approves and maintains Prototype ERL records.

The BNL Records Management System and controlled document Subject Areas within SBMS, supplemented by C-AD procedures, provide the requirements and guidance for the development, review, approval, control and maintenance of documents and records.

Prototype ERL documents encompass technical information or instructions that address important work tasks, and describe complex or hazardous operations. They include plans, procedures, instructions, drawings, specifications, standards and reports.

Records are information of any kind and in any form, created, received and maintained as evidence of functions, policies, decisions, procedures, operations, or other activities performed within the Department. Records are retrievable for use in the evaluation of acceptability, and verification of compliance with requirements. Department records are protected against damage, deterioration or loss.

6.3.4. Work Process

Work is performed employing processes deployed through the BNL SBMS. SBMS Subject Areas are used to implement BNL-wide practices for work performed. Subject Areas are developed in a manner that provides sufficient operating instructions for most activities. However, C-AD management via the DOE Conduct of Operations Agreement is required to operate the accelerator complex using facility specific procedures and a Departmental chain of command. Procedures provide C-AD and prototype ERL managers with a critical management tool to communicate detailed expectations for how individual workers are to perform specific tasks. Internal technical procedures are bounded by the requirements established by the BNL Subject Areas. Technical procedures and checklists tend to follow the DOE Standard 1029-92, Writer's Guide for Technical Procedures. Departmental policy and goal-setting documents are also written in the form of procedures, and they follow this same Writer's Guide where applicable; however, they are more narrative in style.

Group leaders and technical supervisors are responsible for ensuring that employees under their supervision have appropriate job knowledge, skills, equipment and resources

necessary to accomplish their tasks. C-AD and Prototype ERL subcontractors and vendors are held accountable to implement this same practice.

The BNL Quality Management System, supplemented by C-AD procedures, provides processes for identifying and controlling items and materials to ensure their proper use and maintenance to prevent damage, loss or deterioration.

C-AD management has identified those processes requiring calibrated measuring and testing equipment. Item identification and control requirements are specified, when necessary, in appropriate documents, e.g., drawings, specifications and instructions. Materials undergoing tests or inspections are controlled to avoid mixing acceptable items with items of unknown origin or history, thus avoiding inadvertent use.

C-AD management delegates authority to all C-AD personnel to "Stop Work" to avoid unsafe work practices.

6.4. QA Activities That Impact Accelerator Maintenance and Operations

6.4.1. Design

The C-AD staff plans, develops, defines and controls the design of the Prototype ERL in a manner that assures the consistent achievement of objectives for productivity, performance, safety and health, environmental protection, reliability, maintainability and availability. Design

planning establishes the milestones at which design criteria, standards, specifications, drawings and other design documents are prepared, reviewed, approved and released.

The design criteria define the performance objectives, operating conditions, and requirements for safety and health, reliability, maintainability and availability, as well as the requirements for materials, fabrication, construction, and testing. Appropriate codes, standards and practices for materials, fabrication, construction, testing, and processes are defined in the design documentation. As indicated in 10CFR851, nationally recognized codes and consensus standards are used. If national consensus codes are not applicable because of experimental restrictions, then C-AD implements appropriate approved processes to provide equivalent protection. In this way, C-AD and Prototype ERL ensure a level of safety greater than or equal to the level of protection afforded by the national codes and standards.

Specifications, drawings and other design documents are used to represent verifiable engineering delineations, in pictorial and/or descriptive language, of parts, components or assemblies in the Prototype ERL. These documents are prepared, reviewed, approved and released in accordance with C-AD procedures. Changes to these documents are processed in accordance with the C-AD configuration management procedures.

6.4.2. Procurement

Personnel responsible for the design or performance of items or services to be purchased ensure that the procurement requirements of a purchase request are clear and complete. Using

the graded approach, potential suppliers of critical, complex, or costly items or services are evaluated in accordance with predetermined criteria to ascertain that they have the capability to provide items or services that conform to the technical and quality requirements of the procurement. The evaluation includes a review of the supplier's history with BNL or other DOE facilities, or a pre-award survey of the supplier's facility. C-AD personnel ensure that the goods or services provided by the suppliers are acceptable for their intended use.

6.4.3. Inspection and Acceptance Testing

The BNL Quality Management System within the SBMS, supplemented by C-AD procedures, provides processes for the inspection and acceptance testing of an item, service or process against established criteria and provides a means of determining acceptability. Based on the graded approach, the need and/or degree of inspection and acceptance testing are determined during the activity/item design stage. Inspection/test planning has as an objective the prompt detection of nonconformance that could adversely affect performance, safety, reliability, schedule or cost.

When required, acceptance and performance criteria are developed and documented for key, complex or critical inspection/test activities. If an item is nonconforming, it is identified to avoid its inadvertent use. These processes specify how inspection and test status are indicated either on the item itself, or on documentation traceable to the item.

The BNL Calibration Subject Area, supplemented by C-AD procedures, describes the calibration process for measuring and test equipment. Prototype ERL management identifies appropriate equipment requiring calibration. The calibration status is readily discernible and associated calibration procedures, documentation, and records are prepared and maintained. Calibrated equipment is properly protected, handled and maintained to preclude damage that could invalidate its accuracy. Measuring and test equipment found out of calibration is identified and its impact evaluated.

6.5. Management Assessment

The managers of the four C-AD Divisions periodically evaluate or "self-assess" the effectiveness of the C-AD organization and present their report to senior management. Through the C-AD Self-Assessment Program, a regular, systematic evaluation process has been established wherein C-AD assesses internal management systems and processes used to make fact-based decisions. For example, see the C-AD Assessment Web Page. The C-AD Self-Assessment Program extends to the operation of the Prototype ERL and includes such items as: performance measures; compliance checks; effectiveness evaluations; job assessments; surveys; and environment, safety and health walk-throughs. Strengths and opportunities for improvement are identified. Assessment results are documented and fed back to managers, and provide valuable input into the business-planning process.

C-AD's Environment Management System and Occupational Safety and Health (OSH) Management System and associated activities also undergo management review each year. In

addition, these management systems are reviewed by third-party registrars, and federal, New York State and County agencies. Together these reviews provide comprehensive and objective information used by C-AD management in establishing strategic direction and improving environmental and OSH performance.

6.6. Independent Assessment

Using the graded approach, C-AD management periodically evaluates the implementation of the BNL Management Systems, SBMS Subject Areas and Department-level procedures. This is done through reviews, assessments and/or other formal means. The C-AD QA Group performs these assessments. They include an evaluation of the safety and quality cultures in terms of the adequacy and effectiveness of the management structure, which includes, but is not limited to, environment, safety and health, security, quality, conduct of operations, and training requirements.

Individuals verifying these activities have sufficient authority to access work area, and organizational freedom to accomplish the following: identify problems, initiate, recommend, or provide solutions to problems through designated channels, and verify implementation of solutions.

All assessments are planned and conducted using established criteria. The type and frequency of these assessments are based on the status, complexity and importance of the work or process being assessed. The results are documented, non-conformances and recommendations

identified and presented to C-AD management. The Department develops corrective actions to promote improvement. Actions are tracked to closure by C-AD QA in the Family version of the BNL Assessment Tracking System (ATS). Those conducting independent assessments are technically qualified and knowledgeable in the areas assessed and are independent from the activities assessed. Where necessary, subject matter experts are involved in the assessments to give insight into a particular area.

In addition, peer review is a process used at C-AD by which the quality, productivity and relevance of science and technology programs is monitored and evaluated. In operational and ESH arenas, peer review is used to evaluate and independently verify engineering design and procedure implementation.

7.Post-Operations Planning

7.1. Structural and Internal Features that Facilitate Future Decommissioning/Dismantling

Concrete block was used to create the walls and labyrinths for the Prototype ERL. See the figure below. This concrete is re-usable and when not in use, it is stacked inside Building 912.

Additionally, significant portions of the following items are likely to be recycled or reused:

- Superconducting RF Cavity - The 5-cell SRF cavity may be used in RHIC. If C-AD does not use it in RHIC, the cryostat will still be useable.
- RF Systems for Superconducting Injector and Superconducting Cavity will be re-used.
- The laser system used for the Prototype ERL will be reused. Slight modifications may be needed if there are changes in the operating parameters. The same would be true for the

optical components. Neither the laser nor the optical components produce radioactive or hazardous waste.

- Cryogenic, vacuum, magnet and electrical hardware outside the accelerator enclosure will be re-used.
- The Prototype ERL electron beam dump system will be used as a spare for the RHIC electron beam cooler. The dump is made of Cu and 304L stainless steel; it has an Al support structure with G-10 insulators. Low levels of activation are expected.
- Beam instrumentation will be re-used.
- Conventional facilities (e.g., cables, electrical distribution panels, cable tray) will be reused.

7.2. Operations Considerations to Minimize the Generation of Radiological and/or Hazardous Materials

The C-AD participates in ISO 14001 registrations each year for environmental management and conducts a review of all existing process assessments and performs an initial assessment for each new process introduced in that year. Each assessment consists of the following topics:

- Detailed process descriptions and waste determination
- Regulatory determination of process outputs
- Waste minimization, opportunities for pollution prevention
- Assessment prevention and control for hazardous and radioactive materials

For example, the Prototype ERL closed-loop cooling water system transfers heat from the Prototype ERL magnets and cryogenic compressors to cooling water and then indirectly rejects the heat utilizing a heat exchanger to cooling tower #3 (see Figure 7.2). Cooling water from tower #3 directly rejects heat to air utilizing the cooling tower. Based on the process assessment, the following practices were implemented at Prototype ERL in order minimize the generation of and on-site storage of radioactive and hazardous materials:

- Water drained or otherwise collected from the Prototype ERL primary loop is collected in tanker trailers where it is stored for reuse/recycle, or evaporated or disposed of as radioactive waste
- No biocide or corrosion inhibitors are added to the Prototype ERL water system
- Spent filters are sent offsite for disposal as low-level radioactive waste every 1 to 2 years
- Spent deionizer resin is exchanged onsite approximately every two years and the resins are drummed, sampled and disposed based on sample analysis results

Figure 7.2 Prototype ERL Cooling Water Process Flow Diagram

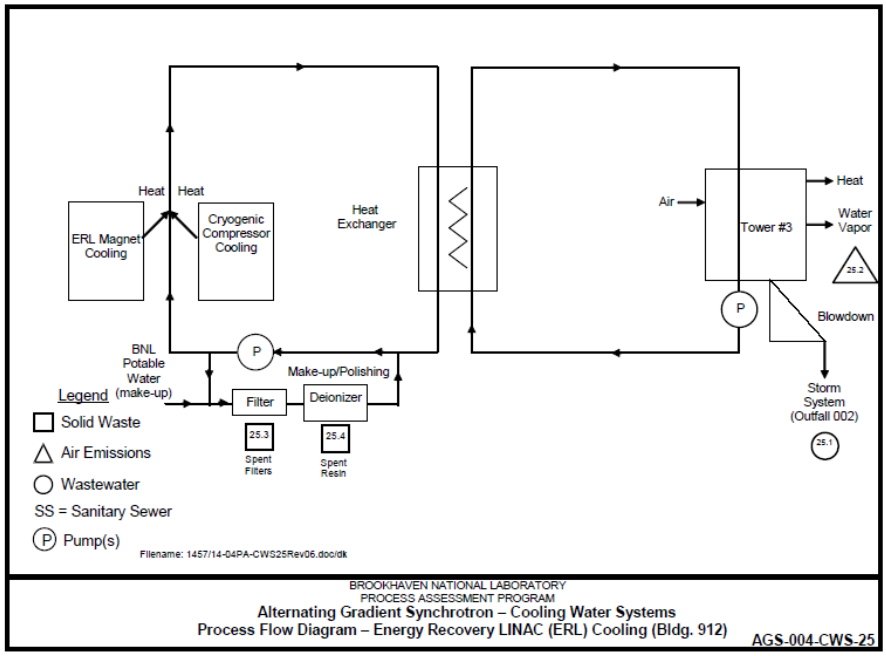

In addition to cooling water, this type of process evaluation is done for all Prototype ERL related operations that use or generate hazardous and radioactive materials including:

- Beam line construction and disassembly
- Magnet cleaning
- Electronic assembly
- Beam stops and collimators
- Materials storage
- Mechanical assembly
- Plating and tinning
- Cryogenic systems
- Vacuum systems
- Tech shop activities

7.3. Long-Term Records Management to Facilitate Post-Operations Activities

The following line-organization records are maintained to facilitate post operation activities:

ERL Records to Facilitate Post-Operations Activities

Topic
Occupational Health & Safety Management System Description
Occupational Health & Safety Management Plans
Risk Assessments Files
OSH Management Reviews And OSH Records Of Decision Documents
OSH Internal Assessments and Audits
WOSH Committee Records (Worker Safety Committee)
Training Records
Safety Committee Records
Local Emergency Planning Documents
Emergency Contingency Plans
Tier 1 Facility Safety Inspections
Safety Assessment Documents and Safety Analysis Reports
Work Planning And Control Documentation
Environmental Permits
Experimental Safety Reviews
Occurrence Reports
Operating Manuals
Safety Equipment Records
Records of Roles, Responsibilities, Authorities and Accountabilities for Employees
Process Assessments
Environmental Assessments
Cooling Water System Records
Maintenance Records

7.4. Waste Management of Radiological and Hazardous Material Generation During Post Operations Period

Waste management post Prototype ERL operations will be based on radiological conditions at the time of final shutdown of the Prototype ERL. The approach will factor in the effectiveness of the methods to achieve the desired end-point of the remaining facility. Much of the Prototype ERL facility, such as support buildings and control areas, do not have radioactive or hazardous materials and will require only standard waste management techniques. Based on the

projected low-levels of activation of beam line components, they will be able to be contact handled. A post operations waste management plan will be developed at the end of the Prototype ERL facility's life. The plan will address the conditions and hazards in detail and will have the benefit of additional information and waste management technologies not yet available.

8.References/Glossary/Acronyms

8.1. List of Documents that Provided Supporting Information for the SAD

8.1.1. Accelerator Safety Implementation Guide for DOE O 420.2, Safety Of Accelerator Facilities, Office of Science, Department of Energy, May 1999.

8.1.2. Accelerator Safety Subject Area

8.1.3.C-AD Conduct of Operations Matrix

8.1.4.C-AD Fire Hazards Analyses

8.1.5.OPM for C-AD

8.1.6. Radiological Control Manual

8.2. List of Acronyms

AC – Alternating Current

ACGIH – American Conference of Governmental Industrial Hygienists

ACS – Access Control System

AHJ – Authority Having Jurisdiction

AISC - American Institute of Steel Construction

ALARA – As Low As Reasonably Achievable

ANSI – American National Standards Institute

ASE – Accelerator Safety Envelope

ASME - American Society of Mechanical Engineers

ASSRC – Accelerator Systems Safety Review Committee

ASTM - American Society for Testing and Materials

ATS – Assessment Tracking System

AVS – American Vacuum Society

AWS – American Welding Society

BHSO – Brookhaven Site Office

BNL – Brookhaven National Laboratory

BSA – Brookhaven Science Associates

BTMS – Brookhaven Training Management System

C-AD – Collider-Accelerator

CA – Controlled Access

CAS – Collider-Accelerator Systems Watch

CEE – Chief Electrical Engineer

CFR – Code of Federal Regulations

CGA – Compressed Gas Association

CME – Chief Mechanical Engineer

CW – Continuous Wave

DC – Direct Current

DI – De-ionizer

DOE – Department of Energy

DOELAP – DOE Laboratory Accreditation Program

DOT – Department of Transportation

ECR – Environmental Compliance Representative

EMS – Environmental Management System

EPA – Environmental Protection Agency

ERL – Energy Recovery Linac

ES&F – Experimental Support and Facilities Division

ESH – Environment, Safety and Health

ESHQ – Environment, Safety, Health and Quality

ESRC – Experimental Safety Review Committee

ESSHQ – Environment, Safety, Security, Health and Quality

FHA – Fire Hazards Analysis

FPE – Fire Protection Engineer

FUA – Facility Use Agreement

HOM – Higher Order Mode

HSSD – High Sensitivity Smoke Detector

HV – High Voltage

HVAC – Heating, Venting and Air Conditioning

IOC – Input Output Controller

ISM – Integrated Safety Management

ISO – International Standards Organization

LE – Liaison Engineer

LEC – Local Emergency Coordinator

LOTO – Lock Out / Tag Out

LP – Liaison Physicist

MCNPX – Monte Carlo Neutron Photon Transport Computer Codes

MCR – Main Control Room

MLI – Multi-Layer Insulation

MPFL - Maximum Possible Fire Loss

MS – Management System

NEBA - Northeast Building Addition

NEPA – National Environmental Policy Act

NESHAP - National Air Emission Standards for Hazardous Air Pollutants

NFPA – National Fire Protection Association

NRTL – Nationally Recognized Testing Laboratory

NYS – New York State

ODH – Oxygen Deficiency Hazard

OPM – Operations Procedure Manual

ORPS – Occurrence Reporting and Processing System

OSH – Occupational Safety and Health

OSHA – Occupational Safety and Health Administration

P2 – Pollution Prevention

PCSS – Pressure and Cryogenic Safety Subcommittee

PE – Plant Engineering

PLC – Programmable Logic Controller

PPE – Personal Protective Equipment

QA – Quality Assurance

R2A2 – Roles, Responsibilities, Accountabilities and Authorities

RadCon – Radiological Control

RCT – Radiological Control Technician

RF – Radio Frequency

RFQ – Radio Frequency Quadrupole

RHIC – Relativistic Heavy Ion Collider

RSC – Radiation Safety Committee

RWP – Radiation Work Permit

S&T – Science and Technology

SAD – Safety Assessment Document

SBC – Standard Building Code

SBMS – Standards Based Management System

SCDHS – Suffolk County Department of Health Services

SCFM – Standard Cubic Feet per Minute

SFPC – Standard Fire Prevention Code

SPDES – State Pollution Discharge Elimination System

SRF – Superconducting RF

TLD – Thermo-Luminescent Dosimeter

UL- Underwriters Laboratories

UPS – Uninterruptible Power Supply

WOSH – Worker Occupational Safety and Health

APPENDIX 1

Shielding Analyses

Simple Estimate of ERL Radiation
D. Beavis
August 1, 2006
Updated August 9, 2006

Simple estimates are made for the potential radiation sources in the ERL R&D test setup. The dose rates are based on thick target formulas for high Z targets. The dose rates should be a conservative estimate of the dose rates that could occur due to beam losses. The goal is to obtain an overall view of the shielding issues at an order of magnitude level.

3.5 MeV Electron Beam

Recently the maximum electron gun energy has been lowered from 5 MeV to 3.5 MeV. The potential radiation from beam losses can be estimated from thick target curves given in various references (see ref. 1). The numbers are given at 1 meter from a localized source.

3.5 MeV e- losses rad/(hr-kW)

0 degrees	$4*10^4$
90 degrees	$8*10^3$

The 3.5 MeV beam has a maximum power of 1000 kW. The beam will be transported to the beam dump. The dump must have local shielding to reduce this to levels that are appropriate for the shielding enclosure. The energy of this beam is too low to generate neutrons.

25 MeV Electron Beam

Recently the electron beam energy for the ERL ring has been lowered from 54 MeV to 25 MeV. Using the same reference and assumptions the dose rates at 1 meter are:

25 MeV e- losses rad/(hr-kW)

0 degrees	$8*10^5$
90 degrees	$8*10^3$

The beam energy is sufficiently high in energy to generate neutrons via giant dipole resonance. It will be assumed that the target material is iron. The neutrons are essentially isotropic. The dose rate at 1 meter is (see ref 2):

Neutrons rem/(hr-kW)
430

Non-Beam Sources

The electron gun and the 5-cell accelerating cavity will generate x-rays. The level of x-rays is uncertain but it is assumed that they will be capable of generating dose rates similar to the RF cavities at RHIC. The RHIC observed dose rate of **100 rad/hr at 1 meter** will be assumed.

Beam Losses

The 3.5 and 25 MeV beams are expected to operate with low routine losses. The 5 MeV beam will have a collimator, which will most likely require local shielding. The beam dump will be designed for absorbing the entire 1000 kW of 3.5 MeV beam. The routine loss is expected to be low after the collimator. The power supply system is capable of generating sufficient power to sustain a 1 MW accidental loss. However, large accidental losses may cause damage, which terminates the operation. It is not clear what limits on the beam losses will cause self-termination. Until a self-limiting mechanism is understood we will assume 1 MW can be sustained. Routine losses at unshielded locations are expected to be less than 1 W. The maximum sustainable loss of the 25 MeV beam has been established as 50 kW, which is the limit of the RF power supply. The 25 MeV beam is expected to have routine losses at least a 1000 times lower than the max. sustainable loss, i.e. 50 W.

It is proposed that two beam current transformers be used in differential mode to limit the level of routine losses for both the 3.5 MeV and 25 MeV beams. The first transformer will be located after the collimator in the 3.5 MeV transport. The second will be located in the 3.5 MeV transport to the beam dump. Comparing the difference will establish a net loss of beam in both the 3.5 and 25 MeV transports between the transformers. The plan is to have the configuration of this transformer system under the control of the access control group similar to the B20 transformers in the AGS. A specification will be prepared and presented to a vendor to see if it is achievable. It will be assumed that the system will be accurate for differences of 10^{-3} (conservative) and it is hoped that it will be capable of measuring differences of 10^{-6}. The table below summarizes (crudely) the present sustainable losses for the beams:

Beam (MeV)	Beam Power (kW)	Max. Sustainable loss (kW)	Max. Sustainable loss with transformer at10^{-3}
3.5	1 MW	1 MW	1 kW
25	10MW	50 KW	10 kW

We can use this table to generate the maximum sustainable radiation dose rates from beam losses. These numbers are summarized in the table below:

Dose rates at 1 meter in rad/hr (rem/hr for neutrons)

condition	Max. Loss	Max. Loss with transformer (10^{-3})	Routine
3.5MeV@ 0 deg.-ph	$4*10^{7}$	$4*10^{4}$	40
3.5MeV@ 90 deg.-ph	$8*10^{6}$	$8*10^{3}$	8
25 MeV@ 0 deg.-ph	$4*10^{7}$	$8.*10^{6}$	$4*10^{4}$
25 MeV @ 90 deg-ph	$4*10^{5}$	$8.*10^{4}$	$4*10^{2}$
25 MeV- neutrons	$2.1*10^{4}$	$4.3*10^{3}$	$2.1*10^{1}$

Radiation Through Shield Walls

The radiation levels outside the shield walls can be estimated using "tenth-value layers" (TVL) given for broad beams of electrons and neutrons on shielding material. For the photon shielding the values used for forward (zero-degree) shielding are (see ref. 3):

Energy-material	First TVL (gm/cm^2)	Equilibrium TVL (gm/cm^2)
3.5 MeV- Concrete	60	60
3.5 MeV- Fe	67	67
3.5 MeV- Pb	55	55
25 MeV- Concrete	120	110
25 MeV- Fe	85	85
25 MeV- Pb	60	60

For 25 MeV electrons the TVLs for concrete at 90 degrees are substantially smaller than above and are 85 gm/cm^2 for the first TVL and 80 gm/cm^2 for the following layers (see ref. 4).

The neutron TVLs for concrete (see ref. 5) that are used are 100 gm/cm^2 for the first TVL and 80 gm/cm^2 for all other layers.

The source terms need to be scaled to the expected dose rate at the shielding wall. A distance of 3 meters will be used for this purpose, which is an appropriate distance for the beam line close to the shield wall. This gives a reduction of 1/9. It is then assumed that the dose rate is constant across the portion of wall and the attenuation of the shielding is calculated using the TVLs. The concrete walls are 48 inches thick (287 gm/cm^2).

Dose rates outside 48 inch Concrete Shield (3 meters from source)

condition	Max. Loss	Max. Loss with transformer (10^{-3})	Routine
3.5MeV@ 0 deg.-ph	73 rad/hr	73 mrad/hr	0.07 mrad/hr
3.5MeV@ 90 deg.-ph	15 rad/hr	15 mrad/hr	0.01 mrad/hr
25 MeV@ 0 deg.-ph	13,000 rad/hr	2600 rad/hr	13 rad/hr
25 MeV @ 90 deg-ph	13 rad/hr	2.7 rad/hr	13 mrad/hr
25 MeV- neutrons	1.2 rem/hr	240 mrem/hr	1.2 mrem/hr

The present shielding coupled with the loss assumptions is not sufficient for the photons generated by the 25 MeV electron beam. The beam current transformer interlock and chipmunks outside the shielding probably provide acceptable protection for the other operating conditions. 2-4 orders of magnitude more attenuation for the high-energy photons is required. 10^{-2} attenuation in the forward direction requires 37 inches of concrete, or 8.7 inches of steel, or 4.3 inches of Pb. This would require a thicker shield wall or shielding placed close to the beam line to shield the forward losses.

The present shielding for 90-degree losses of the 25 MeV electron has an attenuation of $3*10^{-4}$. This will be useful for comparison with the attenuation through penetrations in the shielding.

Straight Penetrations Through the Shielding

A simple discussion of the attenuation of straight holes in shielding can be found in Sullivan (see ref. 6). For directional radiation the attenuation depends on the angle between the direction of the radiation and the axis of the hole. For the 90-degree losses most of the penetrations at the ERL R&D test area are at about 45 degrees (close loss) and 24 degrees (far loss). The attenuation for the smaller angle is less but the increased distance to the source also reduces the radiation. For the present discussion the data at 45 degrees will be used with the source evaluated at 3 meters. As can be seen from ref. 6 figures 2.25 and 2.26 the attenuation of neutrons and photons is similar for these angles and the attenuation given for hadrons in ref. 6 figure 2.27 will be used. In addition a formula for neutrons given by Goebel (see ref 7) is used. The attenuation for penetrations through the 48 inch shield wall are listed by the diameter area below:

Diameter (in)	Area (in^2)	Attenuation via Sullivan	Attenuation via Goebel
2	3	$1.2*10^{-3}$	$5.6*10^{-5}$
4	12	$7*10^{-3}$	$5*10^{-4}$
8	49	$4*10^{-2}$	$3.7*10^{-3}$
12	108	$1.1*10^{-1}$	$1.1*10^{-2}$

The Goebel formulation gives attenuations about a factor of 10 smaller than Sullivan. The Goebel formula appears to agree with the values of Sullivan at larger angles, about 75 degrees. For now we will use the more conservative number of Sullivan. The two-inch diameter penetration would have a dose rate about 4 times higher than the shield wall for 25 MeV electron large angle losses. This would probably be acceptable but is not a useful size. The larger holes could be acceptable provided personnel cannot occupy the area near the penetration exit. This simple treatment does not include contributions from reflections from surfaces. Many of the penetrations are near the ceiling and can obtain contributions from radiation reflecting off the ceiling.

Several of the straight penetrations are substantial in size and personnel can approach the exit of the penetration while the machine is operating. These are of special concern and are listed below:

Penetration	Area (in^2)
Cable tray into second floor	288
Wave guide for 5-cell cavity	90
Wave guide for RF-Gun	288

These penetrations are sufficiently large in area and short that they provide essentially no attenuation and require reconsideration. The cable tray port could be divided into distributed smaller ports. The wave-guides must remain the same dimension and therefore the only option to improve the attenuation is to make these penetrations as multi-legged penetrations. Where possible all penetrations should be multi-legged.

Multi-legged Penetrations

The attenuation of neutrons in a multi-legged labyrinth can be calculated using the formulation of Goebel. A penetration for the wave-guide with dimensions 8 inches high by 12 inches wide and with two 18-inch long legs and one 48-inch long leg has an attenuation for neutrons of $1.1*10^{-5}$. The attenuation of photons through the labyrinth should be smaller since the reflection coefficients are smaller for photons than neutrons (see ref. 8). The design of the bends must take into account the potential for neutrons or photons to penetrate through the walls of the bends and "short-circuit" the labyrinth ("punch-through").

There are 4 existing multi-legged labyrinths at present in the shielding. Personnel and equipment access ways are located at the north and south ends of the test area. A utility trench exits under the east and west walls at the south end of the area. The two access ways have been crudely estimated assuming they are 3-legged labyrinths with a factor of 4 to account for the increased size of the openings. The attenuation for each access way is a few 10^{-3} attenuation with a large error. When treated as a two-legged labyrinths the access ways have attenuations of a few 10^{-2} . The attenuations for photons should be lower as noted above. These should be evaluated more carefully in the future. The two trench exits are not calculated here since the geometry does not lend easily to a labyrinth formula. They need to be evaluated in the future or since they are not be used blocked with shielding.

Conclusions

Simple techniques have been used to make simplistic estimates of the dose rates due to beam losses in the ERL R&D test area. Most of these estimates can be considered conservative and offer a general guide for resolving the open issues in the shielding design. These estimates are not intended to replace detailed Monte Carlo calculations where needed. The main unresolved issues at present are the shielding of the photons in the forward direction, the straight penetrations, and the cracks (not discussed here).

References

1) NCRP Report No. 144, Figure 3.5.
2) NCRP Report No. 144, Figure 3.12, and a flux to dose conversion factor.
3) NCRP Report No. 144, Figure 4.1.
4) NCRP Report No. 144, Table 4.2.
5) W.P. Swanson, Radiological Safety Aspects of the Operation of Electron Linear Accelerators, 1979, Figure 52.
6) A.H. Sullivan, A Guide to Radiation and Radioactivity Levels Near High Energy Particle Accelerators, 1992.
7) K. Goebel et. al., "Evaluating Dose Rates Due to Neutron Leakage Through the Access Tunnels of the SPS", CERN LABII-RANote/75-10(1975).
8) NCRP Report No. 144, Figures 4.12 and 4.13.

The effectiveness of a Two-Foot Thick Inner Heavy Concrete Wall

D. Beavis
Dec. 11, 2006

The outside shield wall of the ERL test area is four feet of light concrete. This shield does not provide sufficient (ref. 1) attenuation for the potential radiation from forward faults of the 25 MeV electron beam. Various schemes have been suggested for introducing shielding close to the beamline for additional radiation reduction. In this note the effectiveness of using two feet of heavy concrete as an inner shield wall will be examined. It will be concluded that this should provide sufficient reduction of the radiation.

MCNPX (Ref. 2) can be used to estimate the dose due to photons. Azimuthal symmetry will be used for the problem. The front face of the target is placed 300 cm in front of the four feet thick light concrete shield wall. The 25 MeV beam strikes the front of the target with a direction perpendicular to the shield wall. Initial calculations are done with the existing light concrete wall and then a two feet thick layer of heavy concrete is added 1 meter from the target. The photon doses are tallied on the inner and outer surface of the light concrete wall.

The composition of heavy concrete was obtained by supplementing the composition of the light concrete with iron to achieve a density of 3.5gm/cc. The density for light concrete is 2.35 gm/cc. The compositions by atomic fractions are given in Table I.

Table I. Atomic Fractions

atom	Light concrete	Heavy concrete
H	0.135	0.107
O	0.6529	0.515
Si	0.1185	0.094
Al	0.0182	0.014
Ca	0.0754	0.060
Fe	0.0	0.21

The target used for the calculations was a steel cylinder with a radius of 2 cm and a length of 5 cm. Most materials close to the beam are similar in atomic number to iron so steel was a natural choice for the target material. The forward losses of electrons and photons typically have several inches of steel equivalent in their path due to the beampipe, quadrupoles, and dipoles. The sensitivity to the target geometry was examined and some results for the forward position (radius<15cm) on the inner surface of the light concrete shield wall are shown in Table 2. The dose at large distances can decrease as the target becomes thin and more of the electron energy is lost in the initial part of the concrete wall rather than the target. Although smaller targets can give higher radiation doses on the shield wall it was decided that the target parameters above were a reasonable approximation for the target mass.

Table 2. Photon Dose at R<15cm

Target Length (cm)	Target Radius (cm)	Rem per Incident electron
10	2	1.2E-14
5	2	4.4E-14
2.5	2	8.1E-14
1.5	2	1.1E-13
1.5	1	1.1E-13
1.5	0.5	1.1E-13
0.75	0.5	1.3E-13

The dose as a function of distance from the beam axis is shown in Figure 1. The data are averaged over radial bins ranging from 15cm to 50 cm in width. The red circles display the photon dose on the inner surface of the concrete wall. The green squares show the dose on the outside of the four feet of light concrete. The radial bin with R<15cm has the dose decrease by 0.0015 after 4 feet of light concrete. The blue triangles display the dose on the inner surface with the heavy concrete wall present. The dose for R<15 is reduced by 0.005. The application of concrete and steel TVLs would have given a reduction of 0.007 (see Ref. 1). The statistics in the simulation are not sufficient to extract the dose at the outer surface. The factor of 0.0015 from the light concrete can be used to estimate the dose for R<15cm on the outer surface to be 3.3E-19 rem/e.

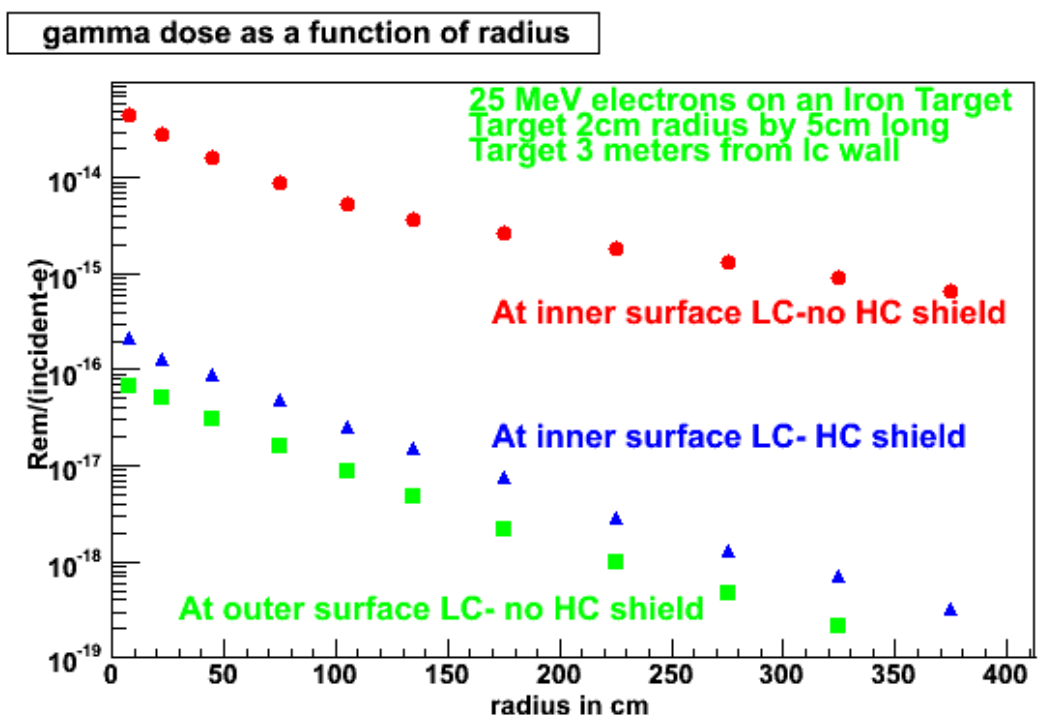

The dose rate can be estimated assuming a rate of beam loss. A 50kW beam loss (0.926 mA) has an estimated dose rate of 3000 rem/hr (R<15cm) for the configuration without the inner heavy concrete wall. This result compares well with a thick target formula with concrete TVL's, which would estimate 6600 rem/hr (Ref. 1 with geometry differences taken into account). The addition of the two feet of heavy concrete reduces the maximum dose to 15 rem/hr for a 50 kW beam loss. Most situations have the source of forward radiation at greater distance from the shield wall and have a non-zero angles to the shielding. The routine losses are expected to be at least 1000 times lower than a 50 kW loss.

9.Conclusions

A simple estimate of the dose rate outside the ERL test area sidewall shielding is made incorporating a proposed two-foot thick inner heavy concrete wall. The estimate of 15 rem/hr for a 50 kW beam loss would be within guidelines with chipmunks distributed to detect large beam losses. Actual beam loss configurations are expected to have reduced radiation due to increased distance and angles relative to the shielding. In addition, a 50 kW localized beam loss is not expected to be possible.

References

D. Beavis Memorandum, "Simple Estimate of ERL Radiation", August 9, 2006.
D. B. Pelowitz,Ed. "MCNPX User's Manual, Version 2.5.0", April 2005; version 2.5f was used for these calculations

Dose Rate Estimates for ERL Penetrations

March 26, 2008
D. Beavis

Introduction

Dose estimates for the penetrations in the ERL facility are provided. The estimates use a combination of simple source terms and estimates of the attenuation of the radiation as it propagates through the opening. The estimates provided in this document are intended to be crude order of magnitude estimates. Conservative assumptions are usually used so that the estimates represent upper limits for the potential dose rates. The low-intensity commissioning process of the RF-gun, five-cell cavity, and transport of the low energy and high energy electron beams will be used to verify the source terms and radiation transport through the shielding and penetrations.

Figure I is a plan view of the shielded area of the facility. There are approximately 20 penetrations through the external shielding. Two of these penetrations are used for personnel and equipment access. Several of the penetrations are buss blocks containing several dozen small penetrations for access of utilities. Other penetrations are intended for electrical cables, cryogens, gas exhaust, laser beam, etc. The overall features are a superconducting RF gun, a five-cell superconducting energy recovery linac (ERL), low energy beam transport to the beam dump, and the 25 MeV electron ring. The side walls are composed of between four and eight feet of light concrete. The thin sections of wall are shadowed from the potential sources with inner shield walls located appropriately. The entire facility has a single layer of light concrete roof beams four feet thick, except for a transition region where the roof is two layers of roof beams. This transition region is where the 13 foot ceiling height in the center is reduced to 9 feet at both ends.

There are restrictions on access for the facility areas. Access into the machine area is prevented by dual interlocks when the machine is operational. This includes the operation of the electron beams, the RF-Gun and five-cell cavity. Personnel will not be allowed on the roof during operations. Personnel will not be allowed in the 1 megawatt power supply room during operations. A substantial area between the adjacent experimental building and the ERL shielding on the west side will be fenced and locked with personnel excluded during operations or with limited access.

The radiation sources are predominately x-rays and gamma rays. The 25 MeV electron beam is capable of generating neutrons. Only in conditions where substantial high-Z shielding materials have been used or where it takes many bounces for radiation to get through a penetration is it possible for the neutron dose rates to dominate the x-ray dose rates.

The shielding is evaluated for two types of exposures, chronic and fault conditions. As will be discussed below the dose rates during fault conditions are typically many orders of magnitude larger than that of the chronic (routine) conditions. The penetrations will not be considered for the chronic dose to personnel since the areas around the penetrations are typically not occupied

and they can be posted for localized elevated dose rates. The penetrations are considered as an issue for dose to personnel during a fault condition.

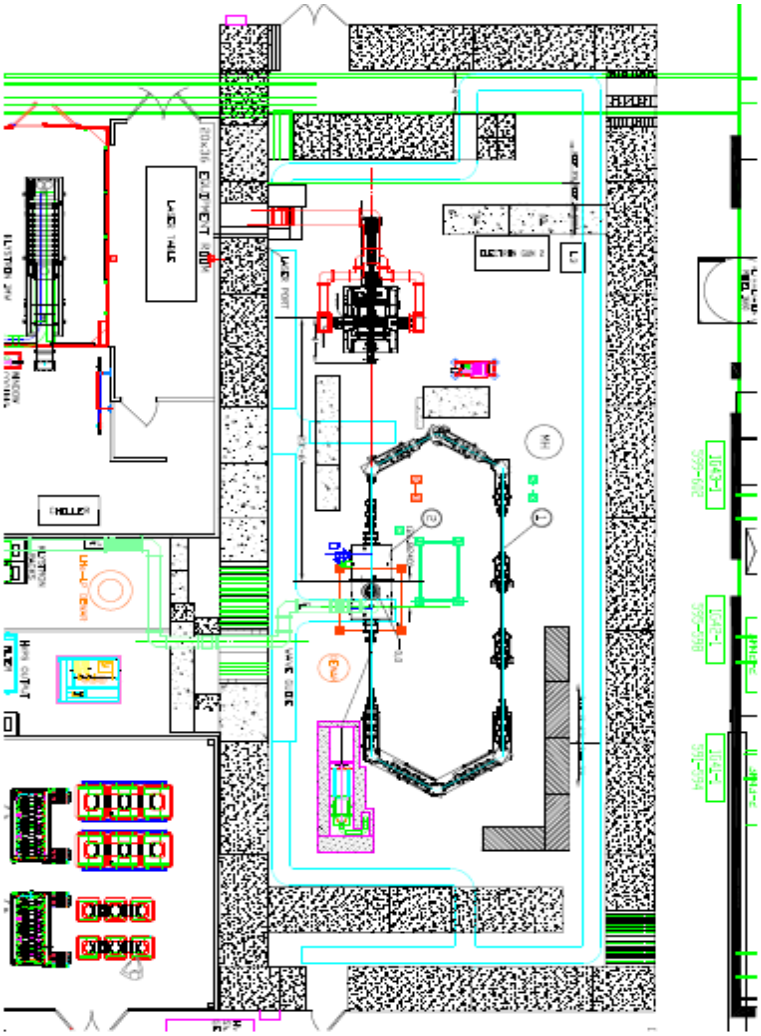

Figure I. Shielded ERL Area

All areas near the ERL shielding should be posted at least as a Radiation Area, TLD Required. Any unplanned exposure exceeding 100 mrem is a DOE reportable occurrence. This establishes an upper limit of exposure to personnel during an unexpected fault condition. Large dose rates caused by unusual operating conditions will be detected by radiation monitors (chipmunks) distributed around the area. These devices are coupled with the interlock system and will terminate the radiation in 1 to 9 seconds depending on the level of radiation at the detector. **This establishes an upper dose rate of between 40 and 360 rem/hr depending on the duration of the fault for areas that can be occupied by personnel.**

Radiation Source Terms

The four sources of radiation in the area are the RF-Gun, beam losses of the low-energy (E_k<3.5 MeV) electron beam, the five-cell cavity, and beam losses of the high-energy electron beam (E_k<25 MeV). Most of the calculations used in this note will use the source terms discussed in reference 1, which were based on formulas and figures from references sited in that note. In some cases more detailed calculations are used. The source terms used are conservative. The commissioning process will provide a check on the source terms and the effectiveness of the shielding.

The RF gun and the five-cell cavity can generate copious x-rays. No modeling has been conducted for the RF gun and the five-cell cavity in terms of the x-ray generation, but experience from other systems can be used for guidance. When these devices are commissioned, careful attention will be given to the measurement of their potential to create x-rays. The conditioning of the cavities will cause the largest x-ray generation from the cavities. The five cell cavity is expected to be able to absorb 100 to 1000 watts from electron emission before boiling too much helium and becoming normal. The voltage difference that the electrons cross will typically be less than the gradient of a single cavity, 5 MV. Only a few electrons would be accelerated across several cavities. It is assumed that **all the electrons are at 3.5 MeV with a maximum conditioning loss of 250 W**. It is expected that the **routine loss is less than 10 W** for the five cell cavities. **We will assume that the RF gun has the same limits**. The methods discussed in reference 1 can be used to estimate the 90-degree radiation, using thick target formulas. The expected dose rates for commissioning and routine operations are:

Cavity x-rays assuming 3.5 MeV

cavity	Conditioning (250W) rem/hr at 1m	Routine (10W) rem/hr at 1 m
Five-cell	2000	80
RF-gun	2000	80

The maximum kinetic energy of the x-ray gun is 3.5 MeV. It is expected that it will typically operate at a lower kinetic energy. The rule of thumb[2] for 0 degree radiation in this energy region is that it grows as the energy squared at fixed power. Therefore using 3.5 MeV represents a conservative figure.

3.5 MeV e- losses rad/(hr-kW)at 1 m

0 degrees	$4*10^4$
90 degrees	$8*10^3$

The source terms for electron losses at one meter for 25 MeV electrons are (an approximate value for 30 degrees has been added):

25 MeV e- losses rem/(hr-kW) at 1 m

angle	gamma	neutron
0 degrees	$8*10^5$	430
30	$8*10^4$	430
90 degrees	$8*10^3$	430

The dose rates for beam losses at 3.5 MeV and 25 MeV given above are based on high-Z thick target formulas or curves and are a conservative estimate. The radiation from actual losses can be up to a factor of 10 lower than the above estimates.

Reference 3 estimated the dose from a 25 MeV electron beam loss in the near zero degree direction to be 9000 rad/hr at 3 meters with 2 feet of heavy concrete between the source and the point of interest with a 50 kW loss. This will be used for locations where an inner shield wall (see Figure I) acts as a shadow for the 25 MeV beam losses.

The routine beam losses and maximum credible beam losses are needed to estimate the potential dose from chronic sources and for unusual conditions. The **maximum sustainable beam loss that the 5 cell cavity can support is 50 kW**, which is limited by the power supply. Many people believe that the **maximum local loss that can occur is between 10-100 W before the machine is damaged and shuts down**. The ERL will have machine protection devices to limit the losses to avoid equipment damage. However, no demonstrated mechanism to limit the beam loss has been demonstrated so a **50 kW limit is used for the 25 MeV electron beam**. The facility will have several chipmunks distributed at key locations to limit the duration of the beam faults. A 50 kW loss is probably appropriate to apply for short durations appropriate to the time required for the interlocks to stop the beam, which is typically 1-10 seconds depending on the dose rate at the chipmunk sensing the radiation. The 50 kW is considered conservative.
Routine losses are expected to be less than 10 W.

The **3.5 MeV beam has a power limit of 1 MW**. This power can be placed in the water cooled beam dump, which has local shielding. Again it is not expected that the machine can survive a large beam loss at any location, except the beam dump. The beam dump has a shielding criteria that it will represent less than a routine loss and is not considered for the penetration in this note. An **arbitrary maximum limit of 1 kW (10^{-3}) is assumed** without justification in this analysis. **A routine loss of 10 W (10^{-5}) or less is expected.** Any routine loss higher than this will be reviewed for the possible addition of local shielding.

Table I provides a summary of the source intensities used for fault conditions and routine operations. These are expected to be conservative and checked during the commissioning process.

Table I. Dose Rates for Routine and Maximum Losses

Condition	**Dose rate (rem/hr) at 1 meter for Max. sustainable loss**		**Dose rate (rem/hr) at 1 meter for Routine loss**	
	Gamma	Neutron	Gamma	Neutron
RF GUN	2000		80	
5-cell Cavity	2000		80	
3.5 MeV-0 deg.	$4*10^4$		$4*10^2$	
3.5 MeV-90 deg.	$8*10^3$		$8*10^1$	
25 MeV-0 deg.	$4*10^7$	$2.15*10^4$	$8*10^3$	4.3
25 MeV-30 deg.	$4*10^6$	$2.15*10^4$	$8*10^2$	4.3
25 MeV- 90 deg.	$4*10^5$	$2.15*10^4$	$8*10^1$	4.3
25 MeV-0 deg. 2ft HC at 3 meters from source	$9*10^3$		0.18	

The dose rate through a penetration is estimated by scaling the dose rate of Table I with 1/(r*r) to the entrance of the penetration and then applying an attenuation factor for the penetration. The attenuation for neutrons can be estimated using empirical formulas such as those presented in references 4 and 5. Typically the attenuation for gammas in multi-legged labyrinths is lower than neutrons, but the neutron formulas do not typically apply to gammas. For gammas, reflection coefficients are used for the surfaces of the labyrinths. This technique can also be applied for neutrons but is limited in applicability. Curves in Sullivan[4] are used for straight penetrations unless otherwise stated.

Some penetrations are shadowed by shielding. The entrance dose for the penetration has a component of radiation that arrived at the penetration by reflecting off surfaces to avoid the shadow shield. Another component of the entrance dose penetrates through the shadow shielding and then travels to the penetration. The TVLs from reference 1 and reference 8 are used[9] to calculate the attenuation of the radiation by the shield.

Laser penetration

The laser penetration is a straight hole through the shielding to allow for the transport of the laser beam to the RF gun. The penetration is 3 inches by 4 inches and is about one foot above the floor. It is located underneath the 1 MW wave guide shown in Figure 1. An enlargement of Fig I for this area is provided in Figure II. The arrows in Fig. II show potential sources for several penetrations. The 5-cell cavity is shadowed by the inner-shield wall and will not be considered as a source. Locations that represent the largest possible dose rates have been used for the analysis. The equivalent of two feet of heavy concrete will shadow the laser penetration from any radiation that could arrive directly from the potential sources. The two feet of heavy concrete provides attenuations from $1.5*10^{-2}$ to $3.2*10^{-4}$. Dose rates at the entrance to the laser port are given in the Table II below.

Table II: Laser port entrance Dose rates

Condition	**Distance (m)**	**Max. dose rate (rem/hr)**		**Routine Dose rate (rem/hr)**	
		Gamma	Neutron	gamma	Neutron
RF Gun	3.3	0.06		0.002	
3.5 MeV e	4.3	1.4		0.014	
25 MeV e-90 degree	7.3	25.5	3.9	0.005	0.0008
25 MeV e-30 degree	12	420	1.4	0.08	0.0003

The radiation can also enter the laser penetration from the side wall after one or more reflections. The details of the area are not sufficiently complete to evaluate the attenuation at this time. The design of the shielding will ensure that the exit dose rate for radiation that circumvents the shielding will be less than the dose rate for the punch through contribution.

The approximate value of the attenuation of this penetration is $5*10^{-3}$ based on figures 2.25, 2.26, and 2.27 of Sullivan. The exit dose rates are given in the table below.

Table III: Laser port exit Dose rates

Condition	**Distance (m)**	**Max. dose rate (mrem/hr)**		**Routine Dose rate (mrem/hr)**	
		Gamma	Neutron	gamma	Neutron
RF Gun	3.3	0.3		0.01	
3.5 MeV e	4.3	1.2		0.01	
25 MeV e-90 degree	7.3	128	20	0.03	0.004
25 MeV e-30 degree	12	2100	1.4	0.4	0.001

There are several comments that are worth noting. The highest gamma dose rate does not come from the same location as the highest neutron dose. These cannot be added since this would represent to beam losses at twice the maximum. Since one is looking for order of magnitude estimates it is not important to add these for a fault condition and the error will be smaller than the accuracy of the calculation. The routine dose rates are small and will not be presented throughout this note. The maximum dose rates can be scaled using Table I to obtain the routine/chronic dose rates. The chronic rates assume that the entire routine beam loss occurs at the worst possible location for the penetration being considered, which is an over estimate.

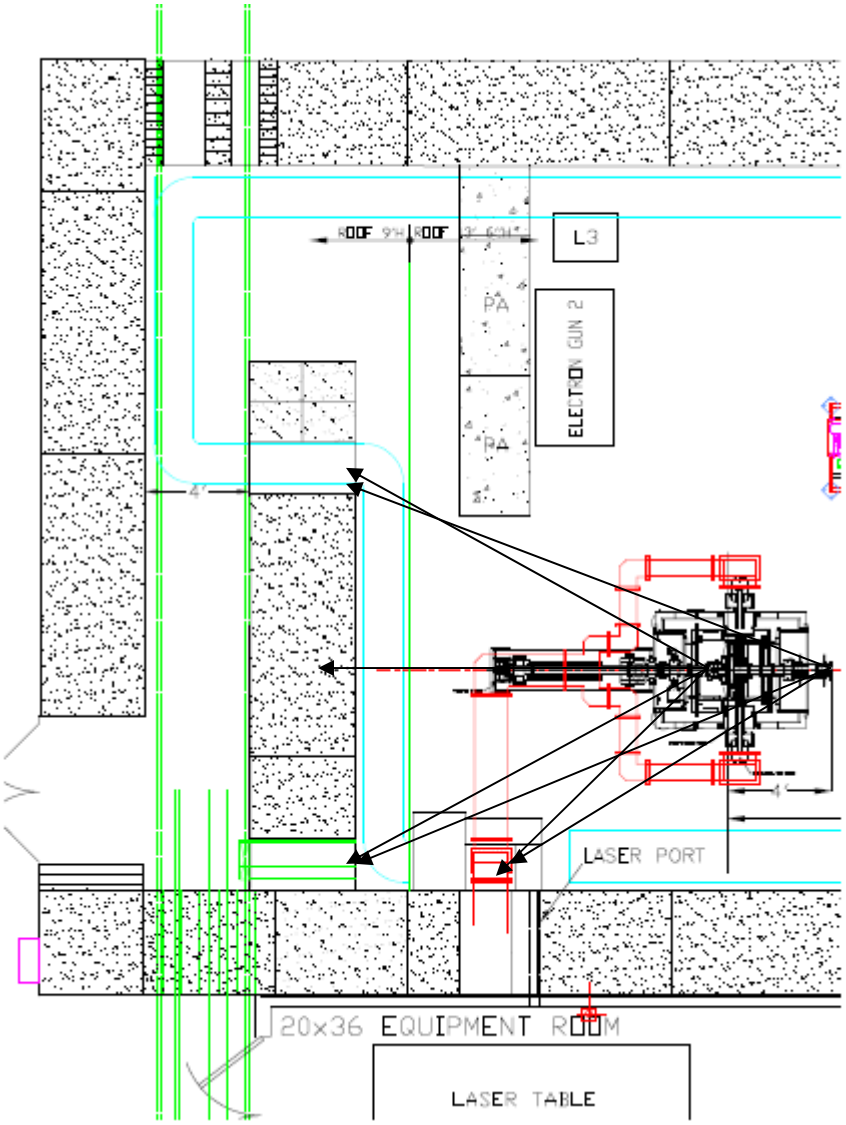

Figure II. Plan view of South section of ERL Area

I MW Waveguide Penetration

The penetration for the 1 MW waveguide is a two legged labyrinth. An elevation view is shown in Figure III. The cross sectional area of the first (second) leg is 2ftx2ft (1ftx2ft). The length of the first (second) leg is 2.9 ft (4 ft). The radiation has two pathways to get to the exit of the port.

Two-feet thick heavy concrete shadows the opening in the main concrete shield wall from the x-ray and neutron sources. The gamma radiation can penetrate the heavy concrete and shine into the second leg. The attenuation factors are the same as those used for the laser penetration. The distance to the source will be assumed to be the same as the laser port at lower elevation, which means the entrance dose rates for radiation "punching-through" the heavy concrete is the same as the laser port. An attenuation factor of 0.1 for the hole in the shielding is used from reference 4.

The exit dose rates for radiation punching through the heavy concrete are given in the Table IV below:

Table IV: 1 MW Waveguide Exit Dose Rates for punch-through

Condition	**Distance (m)**	**Max. dose rate (mrem/hr)**		**Routine Dose rate (rem/hr)**	
		Gamma	Neutron	gamma	Neutron
RF Gun	3.3	6		0.2	
3.5 MeV e	4.3	140		1.4	
25 MeV e-90 degree	7.3	2550	390	0.5	0.08
25 MeV e-30 degree	12	42,000	140	8	0.03

The contribution for the dose for neutrons propagating through the two-legged labyrinth can be estimated using the attenuation formulation of Goebel[5]. An approximate attenuation of $1.0*10^{-3}$ is obtained for the neutrons. The gamma attenuation is estimated using the reflection coefficients. An area for the first scatter of 20 ft^2 is used with a reflection coefficient of $3*10^{-3}$ and a distance of 5 feet. An area of $4ft^2$ is used for the second scatter along with a distance of 5 feet and a reflection coefficient of $3*10^{-2}$. A net attenuation of $1.2*10^{-5}$ is obtained for the gammas.

Table V: 1 MW Waveguide Exit Dose Rates –as Labyrinth

Condition	**Distance (m)**	**Max. dose rate (mrem/hr)**		**Routine Dose rate (mrem/hr)**	
		Gamma	Neutron	gamma	Neutron
RF Gun	3.3	2			
3.5 MeV e	4.3	5		0.05	
25 MeV e-90 degree	7.3	90	400	0.02	0.08
25 MeV e-30 degree	12	330	149	0.07	0.03

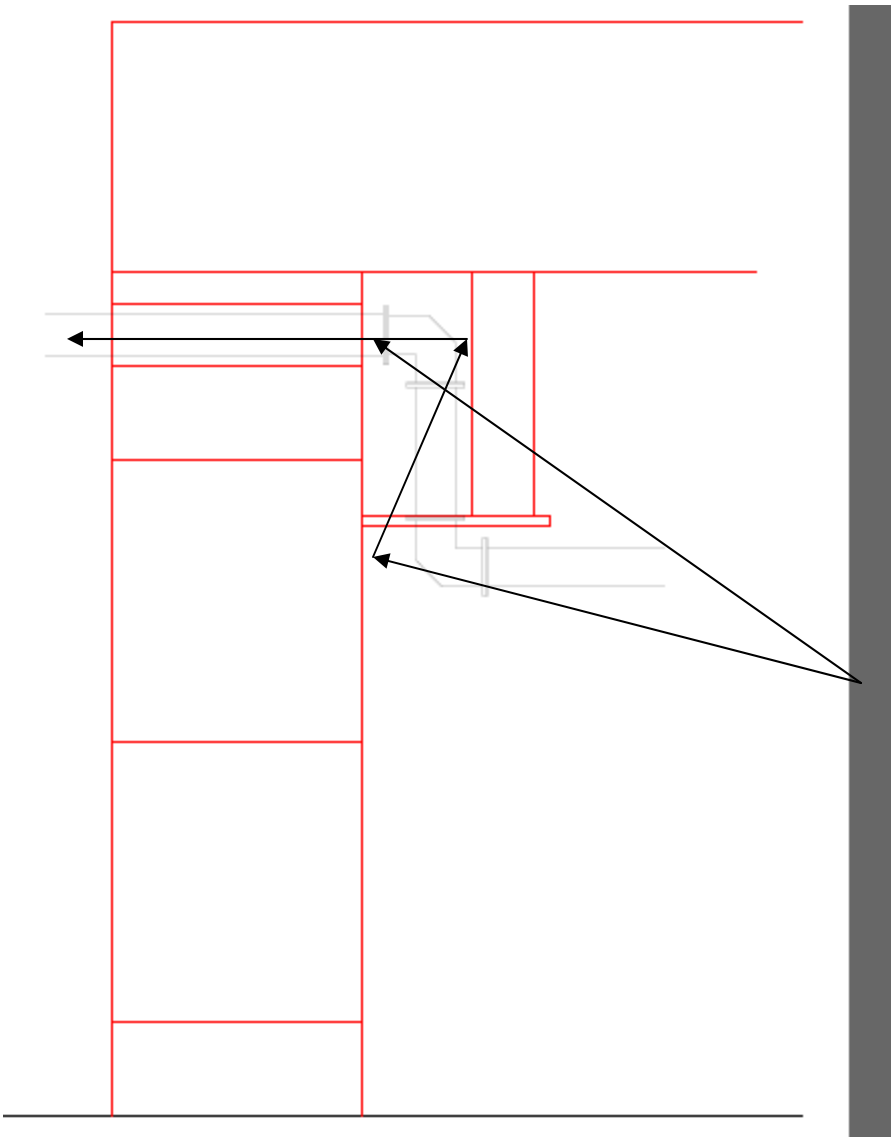

Figure III. 1 Megawatt Waveguide Penetration

Cryo Ports

Five 1ft by 1 ft penetrations exist at the top of the back wall for cryogenics. These ports are straight penetrations. The present plan is to close several of the port with packing block. They will be available in the future for use as utility ports if necessary. One port already has vacuum jacketed cryogenics piping in it. This pipe extends nearly to the adjacent building. Another port will be used for a vent, which will have an elbow immediately outside the shield wall. One port may be used for a few utility pipes and will be packed with shielding. Table VI shows the dose rates at exit of the ports assuming no packing, no shadow shields, and no credit for the shielding provided by the pipes:

Table VI: Cryo Ports Exit Dose Rates

Condition	**Distance (m)**	**Max. dose rate (mrem/hr)**		**Routine Dose rate (mrem/hr)**	
		Gamma	Neutron	gamma	Neutron
RF Gun	6.2	21,000 (470)		840 (19)	
5-cell cavity	6.2	21,000 (470)		840 (19)	
3.5 MeV e	6.2	84,000 (1900)		840 (19)	
25 MeV e-90 degree	3.2	3,800,000 (84,000)	200,000 (4400)	760 (17)	40 (0.9)
25 MeV e-30 degree	5.3	2,800,000 (63,000)	73,000 (160)	560 (12)	15 (0.3)

The worst cases were used for the estimates. The area between the shield wall and the EEBA building is intended to be a fenced area to keep personnel away from these ports. The edge of the building is seven feet away. If we assume the radiation exiting the hole is uniformly diffused over a cone of half-angle of 45 degrees then the radiation levels in the adjacent building will be a factor of 45 lower. **The numbers in parenthesis are the dose rates in the adjacent building** directly across from the port at a height of 12.5 feet.

The ports shall be modified to reduce the fault dose rates by a factor of at least 10. For a port using a steel shielding plate this requires 4 inches (10cm) of steel. For ports that are made smaller the area should be at least a factor of 9 smaller to reduce the radiation more than a factor of 10.

North Personnel Labyrinth

There are several aspects of this area that need to be considered. Figure IV shows a detail of the north labyrinth area. The north-west corner of the labyrinth has a buss block with penetrations to the outside. There is a cable port that acts as a short cut to the labyrinth about 10 feet from the gate. In addition the radiation that penetrates through the inner concrete wall then can enter the labyrinth close to the gate. In the final design the dump shielding shadows the gate entrance from the ring losses. Presently there is a two-foot thick iron shield in that location. Finally, the labyrinth can be treated as a four-legged labyrinth.

Direct radiation is shadowed from striking the buss block area. The near zero degree gamma radiation can arrive at the buss block area with two reflections. Using reflection coefficients the gamma dose would be expected to be reduced about $3*10^{-5}$ from that of the source at a meter. Using the penetration curves from Sullivan one would expect a reduction of another $3*10^{-3}$ for the radiation exiting the port. This gives a net reduction of 10^{-7}. **A beam loss of 50 kW at 25 MeV produces a gamma dose rate of 4 rem/hr**. The routine dose rate is expected to be less than 1 mrem/hr. This is not expected to be an issue. A chipmunk should limit the losses well below 50 kW anywhere in the 25 MeV ring and if desired the area outside the buss block can be part of the exclusion area needed for the cryogenics penetrations that have been discussed earlier. **The neutron dose rate exiting the buss blocks is estimated to be 100 mrem/hr for a 50 kW beam loss close to the labyrinth opening**.

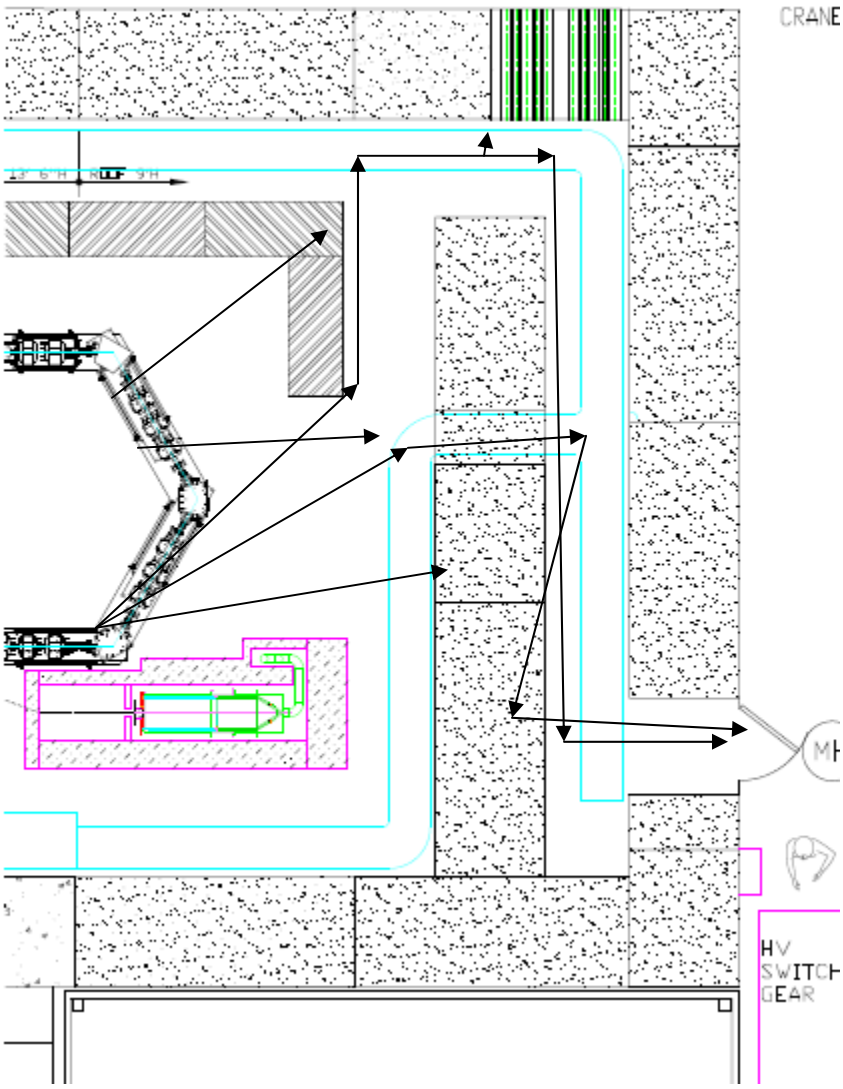

Figure IV. The Area of the North Personnel labyrinth

The radiation can also get to the ports in the buss block by penetrating the inner two-foot thick iron shield wall. The shield wall will provide an attenuation of $3*10^{-6}$ for forward gammas, ignoring the additional reduction due to the angle through the shield. The gamma dose is negligible when the port attenuation is taken into account. The reduction for neutrons, Ignoring the angle through the steel, is $9.3*10^{-3}$. **The neutron-dose rate exiting the port would be 25 mrem/hr from this contribution**. In reality, the additional distance through the steel would reduce the neutrons another factor of ten.

The north labyrinth can be treated as a four-legged labyrinth using the formulation of reference 5 to obtain the dose rate for neutrons at the gate. The attenuation for neutrons is 10^{-5}. The neutron entrance dose rate into the labyrinth is 75 rem/hr when a 50 kW beam loss occurs near the entrance. The **exit neutron dose rate at the gate is less than 1 mrem/hr for the 50 kW loss**. The routine loss is negligible.

The gamma and x-rays traveling through the labyrinth require at least 5 bounces to get to the exit gate. The maximum reflection coefficient[6] for 0.2 to 10 MeV gammas is .04. Using this fixed value for 5 bounces an attenuation of 10^{-7} is obtained without taking credit for the reduction due to distance. The zero degree gamma dose is very peaked in the forward direction. A crude estimate of $8.2*10^5$ rad/hr is used for the entrance dose averaged over the opening of the labyrinth. **The 50 kW beam loss produces an exit gamma dose of 80 mrem/hr at the gate.**

The zero-degree radiation can penetrate the shield wall to the west of the gate. The radiation would require two bounces to get to the gate. The peak dose rate penetrating the 4 feet of light concrete has about 1350 rad/hour for gammas 50 cm off axis of the zero beam[7]. Using an effective area of 28 ft^2 and the reflection coefficients a **gamma dose rate at the gate of 28 mrem/hr is obtained for a 25 MeV beam loss of 50kW.**

The neutrons penetrating the inner shield wall can be calculated using TVLs. A neutron dose rate of 2.7 rem/hr would exist at the light concrete wall. The transport to the gate can be estimated as a two legged labyrinth with an attenuation of $2*10^{-2}$. An additional factor for the source size to the width of the isle, about a factor of four, should be incorporated. This results in a **potential neutron dose rate at the gate of 250 mrem/hr neutrons for a 50 kW beam loss.**

Cable tray that penetrates the wall about 8 feet from the gate will allow neutrons and gammas to get to the gate without going through or around the inner shield. The dose is calculated at the exit the cable port and then transported using the two-legged labyrinth formula for neutrons and 2 bounces for gammas. **The dose rates at the gate are 1.8 rem/hr neutrons and 260 mrem/hr gamma for a 50 kW beam loss.**

The various paths of radiation for the same loss location to the gate are additive. The contribution of the cable tray penetration through the inner shield wall contributes the largest portion of the dose.

South Personnel Labyrinth

The south personnel and equipment labyrinth has pathways for radiation to reach the gate as well as penetrations from locations in the labyrinth to the outside. These will be examined similar to the north personnel labyrinth.

The labyrinth can be viewed as a four legged labyrinth. For neutrons the attenuation of the labyrinth is $3*10^{-5}$. The closest neutron source from a scraping loss produces a neutron-entrance dose of 342 rem. **The expected neutron-exit dose is 10 mrem/hr for a 50 kW beam loss.**

Photons can strike the shielding wall and then be reflected into the labyrinth. It takes a minimum or four bounces for the photons to reach the gates. The photon reduction is of the order of 10^{-8} and even for a 50 kW beam loss the dose rates at the gate are well less than 1 mrem/hr. The maximum loss of the 3.5 MeV beam would create a few micro-rem/hr at the gate.

Photons and neutrons can punch through the wall behind L3 and reduce the effectiveness of the labyrinth. Using the results of reference 2 the photon dose at the light concrete is 336 rem/hr for

a 50 kW beam loss. Two bounces are required to get the photons to the gate. The **photon dose rate at the gate is estimated to be 200 mrem/hr for a 50 kW beam loss.**

For neutrons the shield wall behind L3 was treated as heavy concrete with an attenuation factor of 45gm/cm^2. The neutron dose rate at the light concrete wall is 6 rem/hr. Using a labyrinth formula this will produce a few mrem/hr of neutrons at the gate for a 50kW beam loss.

Photons can travel over the shield wall near L3 and strike the roof transition. With two reflections the photons can be at the light concrete wall. The estimated dose rate via this path is **235 rem/hr at the light concrete wall**. This is similar to the number reached above and is additive. The cable tray can allow some neutrons to get to the light concrete with only one bounce. The estimated dose rate is 70 rem/hr at the light concrete wall. These contribute to the **photon-dose rate at the gate for a total of 400 mrem/hr.**

Neutrons can take a similar path and are expected to produce a few tens of mrem/hr at the gate.

Both neutrons and gammas rays can penetrate the concrete wall opposite the gate and then shine on the gate. The Table VII below lists the results of the dose rate estimates:

Table VII: Radiation Penetrating the Shield Wall Opposite the Gate

source	Dose rate mrem/hr Fault (routine)
RF-gun	1.8
Gamma-3.5 MeV e	4.5 (0.5)
Gamma-25 MeV e; 90 degree	1,900 (0.4)
Gamma-25 MeV e; 30 degree	49,000 (10)
Neutron-25 MeV e	160 (0.03)

A shield block could be placed in the center of the e-ring to shadow this wall from the forward angle radiation and substantially reduce the potential dose. Since the results are conservative, it might be desired to wait for commissions and see if this area is an issue for operations.

The cable port opposite the gate is approximately 7 inches by 24 inches. It is shadowed with 24 inches of heavy concrete used to form the labyrinth for the 1 MW waveguide. The TVLs for the various particles and energies were used to reduce the radiation at the port entrance. An attenuation factor of 0.1 was used for the penetration. The dose rates at the gate are substantially smaller than the dose rate at the exit of the penetration. A factor of 0.1 was used and expected to be conservative. The ratio of the gate area to the cable port area is more than a factor of 50. The estimated dose rates at the gate are given in Table VIII below:

Table VIII: Radiation at the Gate from Nearby Cable Port

source	Dose rate mrem/hr Fault (routine)
RF-gun	0.4
Gamma-3.5 MeV e	0.9 (0.01)
Gamma-25 MeV e; 90 degree	960 (0.2)
Gamma-25 MeV e; 30 degree	2400 (0.5)
Neutron-25 MeV e	33 (0.007)

The cable port 10 feet from the gate is shadowed from all sources except the RF-gun and perhaps the 3.5 MeV electron losses near the RF-gun. X-rays of the level 34 rem/hr and 135 rem/hr can exit the cable port for the RF-gun and electron beam losses respectively. After two reflections these can contribute 1.6 mrem/hr (RF-gun) and 2.3 mrem/hr (3.5 MeV beam loss).

The south labyrinth has several penetrations that allow radiation to escape the shielding. There are two cable way penetrations on the west end of the labyrinth (see Fig. II). The larger hole is 11 inches by 17 inches and the smaller is 6 inches by 12 inches. Dose rate estimates for photons near the adjacent light concrete wall was previously estimated to total 600 rem/hr for a 50 kW beam loss at 25 MeV. An area of the wall (approx. 1ft by 8 ft) can shine out the hole with one bounce off the concrete wall. This would give an estimated 5 rem/hr at the exit of the hole. The 600 rem/hr also shines on the opening of the hole and will produce approximately 60 rem/hr at the exit. The numbers will be smaller for the other port. **A combination of access controls and shadow shielding are required to reduce the levels to acceptable levels**.

The photons can bounce into the trench and exit the shield wall on the west side. The 600 rem/hr would produce 6 rem/hr outside the shielding wall. **It is recommended that the trench be blocked as much as possible to reduce this dose.**

The photons can also bounce off the light concrete wall and exit the trench on the east side or through the buss block on the east side. The trench is estimated to have a photon dose rate of 2 rem/hr. The buss block holes would have a lower dose rate. **Again it is recommended that the trench be blocked as much as possible.**

ODH Port on the Roof

The roof over the beam dump and ring has a ventilation port. This port represents a large opening with dimensions of 2 feet by 4 feet. The port is constructed as a 3-legged labyrinth with a block shadowing the initial opening. The ODH port labyrinth is shown in Figure V.

The dose rate exiting the penetration should be compared to what is expected to penetrate directly through the four feet thick light concrete roof. Using the TVLs for light concrete we expect:

Table IX: Radiation Through 4 foot light concrete Roof

source	**Dose rate through roof at max. fault condition (mrem/hr)**
3.5 MeV RF Gun or Five-cell cavity	5
3.5 MeV e beam-photons	22
25 MeV e beam-photons	18,000
25 MeV e beam-neutrons	1,000

The neutron and gamma radiation can penetrate the 4 foot light concrete and then shine to the end of the labyrinth. These dose rates are lower than the adjacent roof since the shielding is the same thickness but the distance is greater and therefore is less than the adjacent roof given in Table IX.

The area under the air handling unit has a shielding path that is about 80 gm/cm^2 thinner. This would make the radiation levels 10 times higher than the adjacent roof if the extra distance is ignored. The dose rates would be of the order of **10 rem/hr neutron and 180 rem/hr gamma**. This area is blocked by the air handling unit.

For neutrons the port can be treated as a three-legged labyrinth. The attenuation is approximately 10^{-3}. The **neutron dose rate for a 50 kW beam loss is 4 rem/hr**.

It requires a minimum of three bounces for gamma rays to exit the ODH port. Similar to above a fixed reflection coefficient of 0.04 for each bounce will be used. Ignoring distances and areas a **gamma dose rate of 10 rem/hr** is estimated.

Holes on Roof Created by Lifting Fixtures

There are four holes on the roof formed by the roof elevation transition and the lifting fixture for the roof beams. These holes are 4 feet long and are approximately 0.4 ft^2 in area. Personnel are excluded from the roof when the sources or machine operating.

Using the figures in Sullivan (figures 2.24-2.27) an attenuation of $5*10^{-2}$ will be used for both neutrons and photons. The exit will be blocked with the equivalent of 1 foot of light concrete.

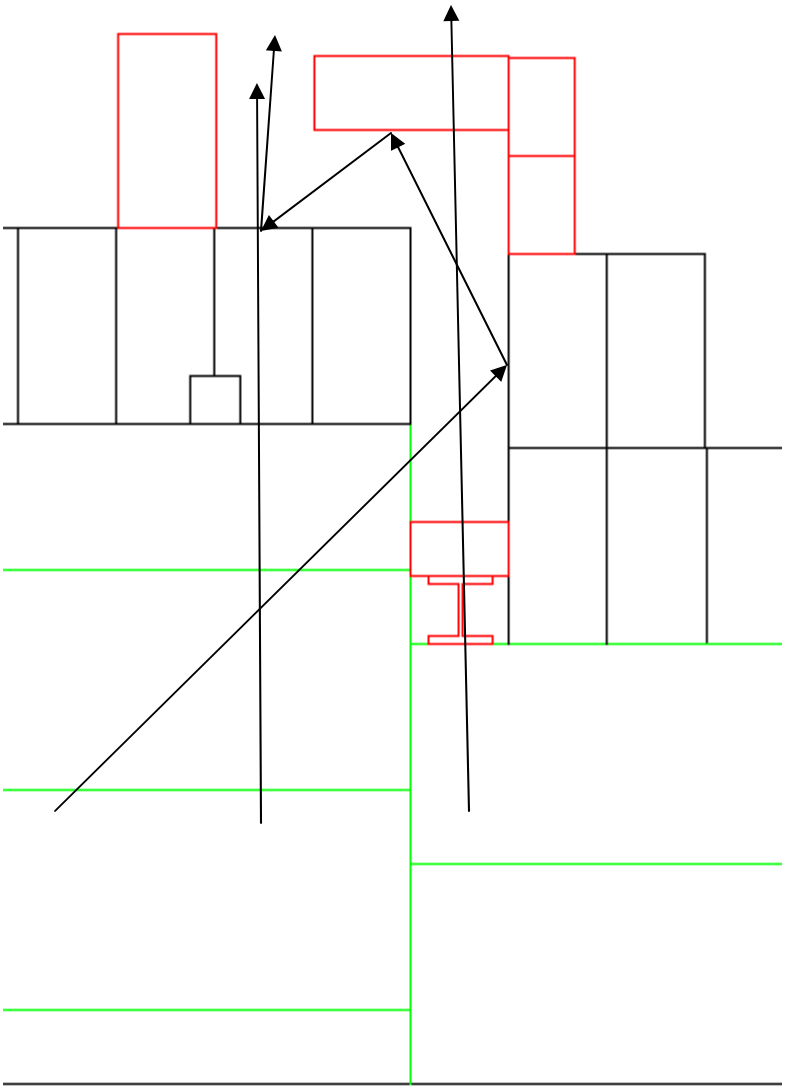

Figure V. Elevation View of ODH Port

This provides a reduction of 0.068 for low energy gammas and a reduction of 0.13 for high energy gammas and neutrons. The following results were obtained for worst case examples for the various sources and the holes:

Table X: Dose Rates at lifting Fixture Holes

Source	***Dose rate mrem/hr***	***Loss***
RF gun	520 (1)	2000 rad/hr at 1 m
3.5 MeV e	1,100 (2)	1 kW
25 MeV e; neutrons	3,800 (8)	50 kW
25 MeV e; gammas at 30 deg.	700,000 (1,400)	50 kW

The edge of the shield wall is at least eight feet away. The number in parenthesis is the expected dose rate at the shielding edge assuming that the radiation is uniformly distributed in a cone with a 45 degree opening half-angle.

Summary

Table XI provides a summary of the worst dose rates at each area for the gamma rays and neutrons. The maximum neutrons can come from a different source location than the gamma rays. In all cases, the maximum gamma dose rates are from the 25 MeV electron beam losses.

XI: Maximum Penetration Dose Rates

penetration	**Max. Gamma Dose rate (mrem/hr)**	**Max. neutron Dose Rate (mrem/hr)**
Laser port	2,100	20
1 MW Waveguide	42,000	400
Cryo Ports (5)	8,400 [1]	2000 [1]
North Gate	260	1800
North Labyrinth Buss Block	4,000 [2]	100
South Gate	49,000 [3]	160
Port in South Labyrinth (2)	60,000 [4]	600 [5]
West Trench	6,000	100 [5]
East Trench	2,000	1,600 [5]
South labyrinth buss block	100	300 [5]
ODH Vent	10,000 [6]	4,000 [6]
Lifting Fixture holes (4)	1,400 [7]	8 [7]
50 kW waveguide	28,000 [8]	1,000 [8]

Comments:

[1] Assumes that steel has been used to reduce the gamma rays by a factor of 10.
[2] This is directly outside the buss block. This may be in a fenced area.
[3] A shield block in the ring center would substantially reduce this number, if desired.
[4] At port exit which may be in a fenced area. Port may be packed in the future. This value is for the port with the highest dose rate of the two ports.
[5] Not presented in text.
[6] This is on the roof and is not allowed to have personnel.
[7] Evaluated at the edge of the shielding and not on the roof.
[8] The penetrations for the cables ports, water pipes and the 50 kW waveguide are presented in another note (see reference 10). The dose rates presented here are at a height of 12 feet above the floor.

All the dose rates in Table XI are sufficiently low that with appropriately placed radiation monitors to terminate the beam on large beam losses the exposure to personnel will be less than 100 mrem in a fault. Several of the larger dose rates can be reduced and some suggestions have been made in the text. Many of the large dose rate estimates are most likely very conservative and not expected to occur. The initial commissioning process at low currents will provide a check of the estimates.

The initial commissioning of the RF gun and five-cell cavity will provide an opportunity to examine the penetrations for x-rays at a much reduced level. One or two chipmunks are planned to be placed inside the shielded area to verify the source terms for the RF gun and five-cell cavity. The proposed test to run low intensity 25 MeV electrons into a flange at the north side before the ring is operational will also provide an early check on the shielding and penetrations.

There have been several suggested or assumptions to the shielding in this note. Table XII lists some of them for consideration:

XII: Suggestions for Penetrations

Area	**suggestion**
I MW Penetration	Check shielding meets assumptions
Laser penetration	Check shield meets assumptions
Cryo ports	Check shielding is added
Outside adjacent area to shielding	Define as radiation area
West side of shielding	Fence and lock when machine operational
South labyrinth penetrations on west side	Consider enclosing in locked area and adding shielding
Roof	Examine Roof access is properly prevented
Trench under shielding	Add some shielding to reduce dose rate and prevent access
South Gate	Consider block in center of ring to block forward radiation
Chipmunks-radiation monitors	Consider chipmunk locations to terminate large losses

References

1) D. Beavis," Simple Estimates of ERL radiation", August 9, 2008.
2) W.P. Swanson, Radiological Safety Aspects of the Operation of Electron Linear Accelerators, Technical Report Series No. 188, IAEA, Vienna, 1979.
3) D. Beavis, "The effectiveness of a two-foot Thick Inner Concrete Wall", Dec. 11, 2006. See figure 1 of the note.
4) A.H. Sullivan, A guide to radiation Protection and Radioactivity Levels Near High Energy Particle Accelerators, Nuclear technology Publishing, 1992. See figures 2.25, 2.26, and 2.27.
5) K. Goebel et. al., "Evaluating Dose Rates Due to neutron leakage Through the Access Tunnels of the SPS", CERN LABII-RA Note/75-10(1975).
6) NCRP Report No. 144, Radiation protection for Particle Accelerator Facilities, NCRP 2003. See figure 4.12
7) See reference 3 and the figure for the MCNPX calculation.
8) P.K. Job and W.R. Casey," Preliminary Radiological Considerations for the Design and Operation of NSLS II Storage Ring and Booster Synchrotron", NSLS II Technical Note No. 13, July 25, 06.

9) The attenuation lengths for ion and heavy concrete given in reference 8 have been converted to TVLs.
10) D. Beavis, "Estimate of the Radiation Exiting Penetrations for the ERL 50 kW Waveguide, Cable Buss Block, and Water Pipes", Dec. 6, 2006.

APPENDIX 2

ODH Calculations

Collider-Accelerator Department

BROOKHAVEN NATIONAL LABORATORY

Building 911-A
P.O. Box 5000
Upton, NY 11973-5000
Phone 631 344-5272
Fax 631 344-5676
rck@bnl.gov

managed by Brookhaven Science Associates
for the U.S. Department of Energy

Memo

Date: January 8, 2008 (Revised 6/16/08)

To: E. Lessard

From: R. C. Karol

Subject: ERL Oxygen Deficiency Hazard (ODH) Calculations

Purpose

To compute the appropriate ODH class for the ERL Cave in B912 and the ERL helium recovery building located just north of B912. Oxygen deficiency can be caused by a leak of cold helium or nitrogen fluid present in these buildings.

Summary and Conclusions

The goal of this calculation was to determine the Oxygen Deficiency Hazard (ODH) risk for the ERL Cave in B912 and the ERL helium recovery building located just north of B912 by computing the fatality rate for a major cryogenic fluid release. A spectrum of events may cause an oxygen deficiency. A major cryogenic system failure has been chosen to bound the consequences of all credible failures in the ERL Cave and the ERL helium recovery building as shown below. Spill rates are assumed to remain constant throughout the release. In addition, a catastrophic failure of a 500L cryogenic Dewar in the ERL Cave was examined.

Building	Free Volume	Bounding Cryogenic Leak Location	Spill Rate (SCFM) [Reference 1]	ODH Exhaust Fan Capacity (SCFM)
ERL Cave in B912	20,000 ft^3	Failure of 1-inch copper LN2 transfer line	3275	13,750
ERL Helium Recovery Building	9500 ft^3	Rupture of Kinney vacuum pump helium discharge line	1150	4,850

It is concluded that the ERL Cave and the ERL helium recovery building be classified as ODH 0 areas.

Applicable Criteria

The method and criteria in the BNL ODH Subject Area [2] was used to determine the ODH class for each ERL building.

ODH Model Description

The Fermi Model is a prescribed method to determine the necessary level of hazard control for a building having the potential for oxygen deficiency. The fatality rate in the model is the product of two numbers. One quantity is the probability per hour of an event causing an oxygen deficiency. The other quantity is found by estimating the minimum oxygen concentration during the transient, assuming instantaneous mixing of the air and inert gas in the building volume, and is represented by a factor between 0 and 1 (see Figure 1). The computed fatality rate is then used to define the ODH class necessary to protect personnel.

The Oxygen Deficiency Hazard fatality rate is defined as:

$$\Phi = PF$$

where Φ = the ODH fatality rate per hour
P = the expected rate of the event per hour, i.e. initiator frequency
F = the fatality factor for the event (Figure 1)

The value of P, the initiator frequency, is determined by using actual equipment failure rate data taken from the BNL SBMS subject area.

Figure 1. Graph of the Fatality Factor (logarithmic scale) versus the Computed Oxygen Partial Pressure.

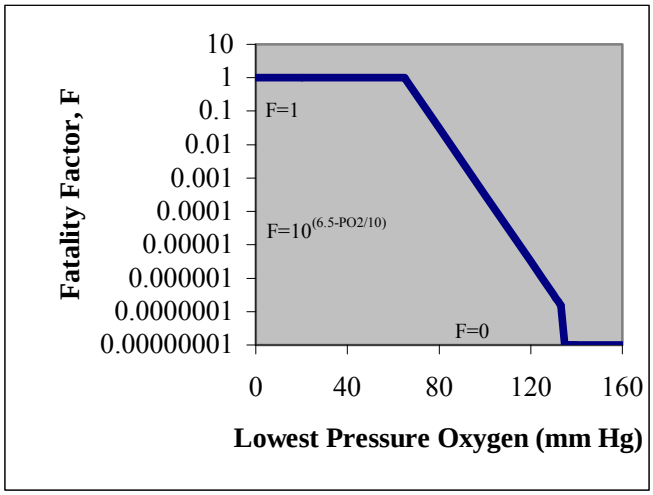

The value of the fatality factor, F, is the probability that a fatality will result if the inert gas release occurs. Figure 1 from the SBMS defines the relationship between the value of F and the computed oxygen partial pressure. The partial pressure is found by multiplying the mole fraction of oxygen in the building atmosphere by 760 mmHg. If the oxygen concentration is greater than 18% (~137 mmHg), then the value of F is defined to be zero. That is, all exposures above 18% are defined to be safe and do not contribute to fatality. If the oxygen concentration is 18%, then the value of F is defined to be 10^{-7}. At decreasing concentrations the value of F increases until, at some point, the probability of fatality becomes unity. That point is defined to be 8.8% (~67 mmHg) oxygen in the Fermi model, the concentration at which one minute of consciousness is expected.

The value of Φ, the fatality rate, is then used to determine the ODH class of the building as follows:

ODH Class	Fatality Rate (per hour)
NA	$<10^{-9}$
0	$\geq 10^{-9}$ but $<10^{-7}$
1	$\geq 10^{-7}$ but $<10^{-5}$
2	$\geq 10^{-5}$ but $<10^{-3}$
3	$\geq 10^{-3}$ but $<10^{-1}$
4	$\geq 10^{-1}$

The oxygen concentration in the building during a release of a gas is approximated by solving the following differential equations:

(a) If the exhaust fan is on and the spill rate of inert gas (R) is less than the exhaust fan capacity (Q):

$$V\frac{dC}{dt} = 0.21\,(Q - R) - QC$$

Where

V = building volume (ft^3)
C = oxygen concentration (mole fraction)
t = time (minutes)
Q = exhaust fan(s) flow rate (CFM)
R = inert gas spill rate into building (CFM)

Solving results in the following equation:

$$C(t) = 0.21\ [1 - R/Q(1-\exp(-Qt/R)]$$

(b) If the exhaust fan is off or if the inert gas spill rate (R) is greater than the exhaust fan capacity (Q):

$$V\frac{dC}{dt} = -RC$$

Solving results in the following equation:

$$C(t) = 0.21\ \exp(-Rt/V)$$

Assumptions

1. Building volumes were measured with appropriate corrections made for determining the free volume.

2. The ERL Cave exhaust fan starts 30 seconds after the cave oxygen concentration sensors fall to 18% and has a capacity of 13,750 CFM. This exhaust fan capacity is chosen to ensure that the oxygen concentration in the cave never falls below 16%.

3. The ERL helium recovery building currently has no exhaust fan but has oxygen sensors which alarm at 18% oxygen concentration. An alternative is examined with an exhaust fan capacity of 4,850 CFM to ensure that the oxygen concentration never falls below 16%. The fan is assumed to start 30 seconds after the oxygen sensor trips at 18%.

4. The helium and nitrogen spill rates, assumed to remain constant, were obtained from Reference 1.

5. Outside air drawn into the ERL Cave has a 21% oxygen concentration.

6. As per the SBMS model, the oxygen concentration in the building is found by assuming instantaneous mixing of the air and cryogenic gas in the building volume.

Detailed Calculation and Analyses

1. **ERL Cave ODH Calculation:**

In order to simplify the calculation for the ERL Cave by avoiding a detailed analysis of the cryogenic system failure rates, the following was done:

1) Using the worst case cryogenic fluid spill rate [1], the time for the cave oxygen concentration to fall from 21% to 18% was determined using:

$$t = -\ln (0.18/0.21)\ V/R$$

where:
V = the ERL cave free volume, 20,000 ft^3
R = the maximum spill rate of nitrogen into the ERL cave, 3275 CFM

This results in a time of 0.94 minutes.

2) Assuming that it takes 30 seconds from the time of oxygen sensor trip until the ODH exhaust fan is at full capacity, the fan will be exhausting 1.44 minutes after spill initiation.

3) With t = 1.44 minutes, the oxygen concentration drops to a 16.6% just as the exhaust fan reaches full capacity of 13,750 CFM. This fan capacity ensures that the oxygen never falls below the steady state value of 16%.

4) Using this minimum oxygen concentration results in a partial pressure of 122 mmHg and a Fatality Factor, F, of 2.2×10^{-6}.

5) Next the initiator frequency, P, which results in a Fatality Rate, Φ of $<10^{-7}$ is found. A Fatality Rate of $<10^{-7}$ corresponds to an ODH 0 classification.

$$P = \Phi/F$$

Solving yields an allowable initiator frequency of P = 0.045 per hr to maintain an ODH 0 classification. This means that this major LN2 leak into the ERL cave, other pressure boundary failures with lower spill rates and human error resulting in a release of inert gas in the ERL cave could occur every 22 hours and still allow the cave to be classified as an ODH 0 area.

6) This initiator frequency is obviously unrealistically high compared to a credible frequency. Thus, controlling the ERL Cave as an ODH 0 area is acceptable and appropriate.

Finally, a catastrophic failure of a 500L He Dewar in the ERL Cave is examined to verify that ODH 0 is appropriate for this failure. The expansion ratio for helium from liquid helium

at atmospheric pressure to room temperature helium gas at 70F is 754 [3]. Thus the released helium is 13,312 ft^3. Assuming perfect mixing of this release into the 20,000 ft^3 cave volume and ignoring any beneficial effects of the ODH exhaust fan, results in an oxygen concentration of 10.8%. The fatality factor at 10.8% oxygen is 1.96×10^{-2}. The probability of a Dewar rupture is 10^{-6} per hour [2], thus the Fatality Rate is 1.96×10^{-8} per hour. This is $<10^{-7}$ per hour so the designation of ODH 0 for the cave remains acceptable.

2. ERL Helium Recovery Building ODH Calculation:

The ERL helium recovery building ODH classification is first examined by finding the time for the oxygen concentration to fall to a level that would cause the room to exceed an ODH 0 classification without ant ODH exhaust fan. It is conservatively assumed that the initiating frequency for this event is once a year or 1.14×10^{-4} per hour. The assumed failure rate is very conservative since SBMS lists pipe-section rupture frequencies as ranging from 10^{-8} to 10^{-10} per hour. The once per year failure rate accounts for a burn-in period when ERL is first started up and prevents having to do a detailed failure rate study of the systems in the helium recover building.

1) Using the worst case cryogenic fluid spill rate [1], the time for the helium recovery building oxygen concentration to fall from 21% to 18% was determined using:

$$t = -\ln (0.18/0.21)\ V/R$$

Where:
V = the ERL helium recovery building volume, 9500 ft^3
R = the maximum spill rate of helium into the ERL recovery building, 1150 CFM

This results in a time of 1.3 minutes.

2) Conservatively assuming that the initiator frequency, $P = 1.14 \times 10^{-4}$ per hour means that F must equal 8.77×10^{-4} to have an ODH 1 classification.

3) If $F = 8.77 \times 10^{-4}$, then the corresponding oxygen concentration is found using:

$$F = 10^{(6.5-PO2/10)}$$
$$C = PO2/760\ (100)\ \%\ \text{oxygen}$$

Solving yields PO2 = 95.6 mmHg and C = 12.6% oxygen.

4) The time from the start of the accident to reach 12.6% oxygen is found to be 4.2 minutes.

5) Thus with the restraint to maintain the room posted as ODH 0, there is only 2.9 minutes to evacuate the building after the ODH alarm sounds. This may be

insufficient time to evacuate. The building has 2 doors and a footprint of 41' x 24' with three large equipment skids in the room.

As an alternative, an ODH exhaust fan having a capacity of 4,850 CFM is assumed. This alternative is necessary because the above scenario results in a low oxygen concentration and depends on a fairly rapid response time for the building occupants to escape. An exhaust fan capacity of 4,850 CFM was chosen to ensure that the oxygen concentration never falls below 16%.

1) From step 1 above it takes 1.3 minutes to trip the oxygen senor when the oxygen concentration falls to 18%.

2) Assuming that it takes 30 seconds from the time of oxygen sensor trip until the ODH exhaust fan is at full capacity, the fan will be exhausting 1.8 minutes after spill initiation.

3) With t = 1.8 minutes, the oxygen concentration drops to a 16.9% just as the exhaust fan reaches full capacity of 4,850 CFM. The oxygen concentration then slowly falls to a steady state value of 16%.

4) Using this minimum oxygen concentration results in a partial pressure of 122 mmHg and a Fatality Factor, F, of 2.2×10^{-6}.

5) Next the initiator frequency, P, which results in a Fatality Rate, Φ of $<10^{-7}$ is found. A fatality Rate of $<10^{-7}$ corresponds to an ODH 0 classification.

$$P = \Phi/F$$

6) Solving yields an allowable initiator frequency of P = 0.045 per hr to maintain an ODH 0 classification. This means that this major helium leak into the ERL helium recovery building, other pressure boundary failures with lower spill rates and human error resulting in a release of inert gas in the helium recovery building could occur every 22 hours and still allow the building to be classified as an ODH 0 area.

7) This initiator frequency is obviously unrealistically high compared to a credible frequency. Thus, controlling the ERL helium recovery building as an ODH 0 area is acceptable and appropriate.

This calculation was checked by Peter Cirnigliaro.

References

1. Email from Y. Than to R. Karol dated 1/8/08, ERL ODH Data
2. BNL Standards Based Management System Subject Area, ODH Classification/Controls
3. R.F. Barron, *Cryogenic Systems*, 2nd Edition, 1985, Oxford University Press, NY. Appendices B and D.

APPENDIX 3

C-AD Shielding Policy

From the C-AD SAD:

C-AD SAD Appendix 3 C-AD SAD Revision 2 8/2/04

Collider-Accelerator Department Shielding Policy

The main features of the shielding policy for C-AD facilities are currently delineated in the Collider-Accelerator Department Operations Procedure Manual.[1, 2] The principal components of this policy are reviewed here for completeness. The primary purpose of the shielding policy is to assure that all radiation related requirements and administrative control levels are satisfied. Specifically, the Collider-Accelerator Department's Radiation Safety Committee reviews facility-shielding configurations to assure:

1. Annual site-boundary dose equivalent is less than 5 mrem.
2. Annual on-site dose equivalent to inadvertently exposed people in non-Collider-Accelerator Department facilities is less than 25 mrem.
3. Maximum dose equivalent to any area where access is not controlled is limited to less than 20 mrem during a fault condition.
4. For continuously occupied locations, the dose equivalent rate is ALARA but in no case greater than 0.5 mrem in one hour or 20 mrem in one week.
5. Dose equivalent rates where occupancy is not continuous is ALARA, but in no case exceeds 1 rem in one year for whole body radiation, or 3 rem in one year for the lens of the eye, or 10 rem in one year for any organ.

In addition to review and approval by the Radiation Safety Committee, final shield drawings must be approved by the Radiation Safety Committee Chair or the ESHQ Associate Chair. Shield drawings are verified by comparing the drawing to the actual configuration. Radiation surveys and fault studies are conducted to verify the adequacy of any new or modified shield configuration. The fault study methodology that is used to verify the adequacy of shielding is proscribed by additional Collider-Accelerator Department procedures, which are not elaborated here.[3] Any modifications to shielding configurations are likewise closely proscribed. Each facility and experiment is assigned a Liaison Physicist and Liaison Engineer. The Liaison Physicist is responsible, in consultation with the Radiation Safety Committee where appropriate, for determining safe conditions for any shielding modifications. The Liaison Engineer is responsible for ensuring that the safe conditions are met, for effecting any modification, and for notifying other responsible Collider-Accelerator Department personnel, including the Operations Coordinator, as well as experimenters both prior to and on completion of the modifications. Additional procedures exist to ensure that policy with respect to control of radioactive shielding is implemented, which are not elaborated here.

---

[1] http://www.agsrhichome.bnl.gov/AGS/Accel/SND/OPM/Ch09/09-01-12.PDF Procedure for Review of Collider-Accelerator Department Shielding Design

[2] http://www.rhichome.bnl.gov/AGS/Accel/SND/OPM/Ch08/08-13.PDF Collider-Accelerator Department Procedure for Shielding/Barrier Removal, Removal of Primary Area Beam Line Components, or Modifications

[3] http://www.rhichome.bnl.gov/AGS/Accel/SND/OPM/Ch09/09-01-09.PDF Fault Study Procedure for Primary and Secondary Areas

APPENDIX 4

Accelerator Safety Envelope

Accelerator Safety Envelope

Title of Facility: Prototype Energy Recovery Linac (ERL)

Date of Initial ASE: June 30, 2008

Subsequent Revision Dates:

Version of the SAD that the ASE applies to: Prototype ERL SAD 6-30-08

Signature of Preparer:

_____

Signature of Collider-Accelerator Associate Chair for Superconducting Accelerator R&D:

_____

Signature of Collider-Accelerator Department Chair:

_____

Signature of Nuclear and Particle Physics Associate Laboratory Director:

_____

Signature of Deputy Director for Operations:

_____

ASE Contents:

Section 1. Introduction 2
Section 2: BNL Safety Envelope Limits 2
Section 3: Corresponding Prototype ERL Safety Envelope Parameters 3
Prototype ERL Beam Limits in Terms of Electron Energy and Beam Power 3
Control of Beam Loss 4
Access Controls 4
Fire Protection 4

Section 4: Engineered Safety Systems Requiring Calibration, Testing, Maintenance, and Inspection 5
Section 5: Operations Envelop - Administrative Controls 5

Section 1. Introduction

The ASE Requirements herein define the conditions, safe boundaries, and the administrative controls necessary to ensure safe Prototype ERL operations and to reduce the potential risk to the public, workers and environment.

1.1 The reference to the method used by the Collider-Accelerator Department for change control of the ASE is the BNL Subject Area on Accelerator Safety.

1.2 A variation beyond the boundaries described in Sections 2, 3, and 4 of this ASE shall be treated as a violation of the ASE and shall be a reportable occurrence, as defined by the BNL SBMS Subject Area on Occurrence Reporting. A violation is defined as not satisfying a Requirement or its specific Authorized Alternative. C-A Department staff shall make notifications of occurrences according to the requirements in the C-A Operations Procedure Manual.

1.2.1 If a Requirement is not satisfied and it has a specific Authorized Alternative, implement the Authorized Alternate or stop the activity that uses the affected equipment within one hour.

1.3 Emergency actions may be taken that depart from these approved ASE Requirements when no actions consistent with the Requirements are immediately apparent and when these actions are needed to protect the public, worker and environmental safety. These actions shall be approved by the person in charge of facility safety, as defined in the operating procedures, when the emergency occurs and shall be reported to C-AD management within 2-hours.

Section 2: BNL Safety Envelope Limits

This section contains the absolute limits that BNL places on Prototype ERL operations to ensure that BNL meets regulatory limits established to protect our environment, public and staff/visitors and that those operations are conducted within the assumptions of the Prototype ERL safety analyses documented in the **Prototype ERL SAD, 6-30-08**. BNL Safety Envelope Limits for Prototype ERL operations are:

2.1. Less than 25 mrem in one year to individuals in other BNL Departments or Divisions adjacent to this Collider-Accelerator Department accelerator facility.

2.2. Less than 5 mrem in one year to a person located at the site boundary.

2.3. Offsite drinking water concentration and on-site potable well water concentration must not result in 4 mrem or greater to an individual in one year.

2.4. Less than 1250 mrem in one year to a Collider-Accelerator Department staff member.

2.5. Less than 10,000 pCi/L in the BNL sanitary sewer effluent due to liquid discharges from Prototype ERL facilities.

2.6. In order to protect groundwater, if the annual activity concentration of sodium-22 or tritium in leachate is calculated to exceed 5% of the Drinking Water Standard, then a cap shall be used unless BNL Management is convinced otherwise.[1]

2.7. All emissions from Prototype ERL facilities are managed in accordance with the Air Emissions subject area.[2] If emissions are anticipated to exceed 0.1 mrem per year to the Maximally Exposed Individual, actions will be taken to ensure operations comply with NESHAP requirements including continuous emissions monitoring and permitting.

Section 3: Corresponding Prototype ERL Safety Envelope Parameters

This section identifies the measurable limitations on critical operating parameters that, in conjunction with the specifically identified hazard control considerations established by the facility design and construction, ensure that Prototype ERL operations will not exceed the corresponding Safety Envelope Limits discussed in Section 2. These parameters are derived from the safety analyses described in the **Prototype ERL SAD, 6-30-08**. Prototype ERL safety envelope parameters are:

Prototype ERL Beam Limits in Terms of Electron Energy and Beam Power

3.1 Electron energy limit of 3.5 MeV for the super-conducting RF gun.

3.2 The power source of the superconducting gun is limited to delivering 1.2 MW of power to the gun.

3.3 Electron energy limit of 25 MeV for the Prototype ERL ring.

3.4 Electron beam power shall not exceed the equivalent of 10 MW of instantaneous power for the electron beam in the Prototype ERL ring.

3.5 The power source for the five-cell cavity will be limited to delivering a maximum of 60 kW of power to the cavity.

3.6 A beam power of 1.2 MW for a 3.5 MeV electron beam striking the beam dump.

---

[1] BNL SBMS Accelerator Safety Subject Area, Design Practice for Known Beam Loss Locations.
[2] BNL SBMS Subject Area, Radioactive Airborne Emissions.

Control of Beam Loss

3.7 Beam-loss-monitors, area-radiation monitors and area-radiation survey results shall be used in order to maintain beam loss "As Low as Reasonably Achievable" as defined in the BNL Radiological Manual.

Access Controls

3.8 The Access Controls System shall be functional during operations with beam.

3.9 During the running period, area radiation monitors that are interfaced with the Access Controls System shall be within their calibration date.

3.10 During the running period, the locations of area radiation monitors interfaced with the Access Control System are to be configuration controlled.

Fire Protection

3.11 During periods of beam operation, when access to the primary beam areas is prohibited the installed fire detection and protection systems shall be operable.

Authorized Alternative: Within 2 hours of discovery, the Department Chair or designee may allow partial or full inoperability of any fire detection or protection system for up to 80 hours with beam operations if the benefit of continuing Prototype ERL operations is judged to outweigh the potential risk of fire damage. Operating procedures shall specify the compensatory actions to be taken during inoperability.

3.12 Prototype ERL magnets and power supplies may be energized if the smoke detection system for the energized area can transmit an alarm to summon the BNL Fire/Rescue Group.

Authorized Alternative: The Operations Coordinator, ESH Coordinator or designee may allow partial or full inoperability of any fire detection system or manual alarm station in occupied areas as long as a Fire Watch is posted who can verbally communicate with the BNL Fire/Rescue Group by radio or phone.

Section 4: Engineered Safety Systems Requiring Calibration, Testing, Maintenance, and Inspection

The systems and requirements for calibration, testing, maintenance, accuracy or inspections necessary to ensure the integrity of the Prototype ERL safety envelope parameters during operations are given in this section:

4.1. The Access Control System shall be functionally tested in accordance with requirements in the BNL Radiation Control Manual.

4.2. Prototype ERL ventilation exhaust fans used to prevent an oxygen deficiency event shall undergo annual testing (not to exceed 15 months).

4.3. Prototype ERL fire protection shall undergo annual testing (not to exceed 15 months).

4.4. Area radiation monitors shall undergo annual testing (not to exceed 15 months).

4.5. Radiological barriers shall undergo annual visual inspection (not to exceed 15 months).

Section 5: Operations Envelop - Administrative Controls

Administrative controls necessary to ensure the integrity of the Prototype ERL safety envelope parameters during operations are:

5.1. Minimum Prototype ERL Control Room Staffing

5.1.1. Prototype ERL Control Room: one Trained Operator and one other person shall be on duty when Prototype ERL beam is in operation. During beam operations, one of the two must remain in the Prototype ERL Control Room at all times.

Authorized Alternative: If extra person is incapacitated, the remaining operator may continue operations as long as manning requirements are restored within two hours.

5.2. On-shift operations staff shall be trained and qualified on their safety, operational and emergency responsibilities. Records of training and qualification shall be maintained on the Brookhaven Training Management System (BTMS).

5.3. Work planning and control systems shall comply with the requirements in the C-A Operations Procedure Manual.

5.4. Environmental management shall comply with the requirements in the C-A Operations Procedure Manual.

5.5. Experiment modification and review shall comply with the requirements in the C-A Operations Procedure Manual.

5.5.1. Each upgrade in the Prototype ERL beam parameters or change of Prototype ERL configuration shall be reviewed before running with beam.

5.6. Annually, the C-AD Accelerator Systems Safety Review Committee shall review Prototype ERL's routine operations and facility for safety.

5.6.1. Prototype ERL may lie dormant for a period greater than one year between runs and does not require a review during the dormancy period.

5.7. Industrial hazards shall be controlled in accordance with the applicable portions of the BNL SBMS Subject Area.

5.8. Radiological area classifications during operations shall be in accord with requirements in the BNL Radiation Control Manual.

APPENDIX 5

Fault Study Results (Fault studies to be added following Commissioning)

Beam fault studies are conducted using the minimum beam intensity necessary to complete the study efficiently and consistent with ALARA practices. The beam is "ON" in the fault condition only as long as necessary for adequate survey measurements to be taken. Data for the fault study is kept on record and is used to verify that shielding is adequate for anticipated operations.

Fault studies will be performed after the Prototype ERL accelerator commissioners have control of the beam. Post-commissioning fault-study data will be recorded into this Appendix to the Prototype ERL SAD after the commissioning process is complete. Any changes to the shield design, as a result of a fault study finding, will be addressed in a USI to the SAD. Since fault studies are a post-SAD activity, dose rate calculations in Chapter 4 of the SAD are used to make initial estimates of radiation levels in order to implement appropriate radiological controls for commissioning. These controls, once proven effective by the fault study, verify the long-term radiological controls to be used during Prototype ERL operations.

APPENDIX 6

Qualitative Risk Assessments

Table A6-1 Vacuum
Table A6-2 External Events
Table A6-3 Electric Shock/Arc Flash
Table A6-4 Radiation External to Enclosure
Table A6-5 Radiation Inside Enclosure
Table A6-6 Activation of Components
Table A6-7 Conventional/Industrial Hazards
Table A6-8 Airborne Releases
Table A6-9 Environmental – Cooling Water Spill
Table A6-10 Loss of Electrical Power
Table A6-11 Fire
Table A6-12 Oxygen Deficiency Hazards (ODH)

Table A6-1 Qualitative Risk Assessment for Prototype ERL - Vacuum

FACILITY NAME: Prototype ERL
SYSTEM: Vacuum Beam Line
SUB-SYSTEM: Vacuum System, Beam Window
HAZARD: Vacuum

Event	Structural failure of vacuum boundary
Possible Consequences, Hazards	Implosion of any vacuum component could pose a potential health risk from flying objects or high noise.
Potential Initiators	Failure caused by worker mistake or inadvertent striking contact with vacuum boundary.

Risk Assessment Prior to Mitigation

Consequence	() High	() Medium	(X) Low	() Extremely Low
Frequency	() Anticipated High	(X) Anticipated Medium	() Unlikely	() Extremely Unlikely
Risk Category	() High Risk	() Medium	(X) Low Risk	() Extremely Low
Hazard Mitigation	1. Beam line vacuum components designed to meet consensus standards for compressive stress 2. Vacuum and pressure systems reviewed by the C-AD Chief Mechanical Engineer or his designate and BNL LESHC Pressure Safety Committee 3. Vacuum components, except for windows, are constructed of heavy-walled material, per ASME Boiler and Pressure Vessel Code, Section VIII or equivalent to minimize the threat of implosion when evacuated 4. Many windows are covered 5. Training of Users and Staff			

Risk Assessment Following Mitigation

Consequence	() High	() Medium	(X) Low	() Extremely Low
Frequency	() Anticipated High	() Anticipated Medium	(X) Unlikely	() Extremely Unlikely
Risk Category	() High Risk	() Medium	() Low Risk	(X) Extremely Low

Is the mitigated hazard adequately controlled by existing BNL policies? Y/N Yes If No, roll up into ASE.
Is the hazard mitigation system needed for hazard control? Y/N No If Yes, need ASE requirement.

Table A6-2 Qualitative Risk Assessment for Prototype ERL – External Events

FACILITY NAME: Prototype ERL
SYSTEM: Entire Facility
SUB-SYSTEM: N/A
HAZARD: External Event (Earthquake, Tornado, Hurricane, Flood, Aircraft Impact, Forest Fire, near ERL facility)

Event	External event impacts ERL
Possible Consequences, Hazards	Personnel injuries, equipment/building damage or programmatic impact
Potential Initiators	Earthquake, severe weather, flooding, fire, aircraft impact

Risk Assessment Prior to Mitigation

Consequence	(X) High	() Medium	() Low	() Extremely Low
Frequency	() Anticipated High	() Anticipated Medium	() Unlikely	(X) Extremely Unlikely
Risk Category	() High Risk	() Medium	(X) Low Risk	() Extremely Low
Hazard Mitigation	1. Building designed to Uniform Building Code and designed to meet DOE O 420.1B, Facility Safety 2. Small radioactive inventory cannot cause offsite impacts 3. BNL Fire Group can respond quickly to forest fire; BNL has firebreaks 4. BNL Fire Group can respond quickly to fire near ERL 5. No active systems needed to protect personnel from adverse health effects after ERL off 6. Severe weather and flooding potential is extremely low; warning of these impending hazards will allow for ERL shutdown and for personnel safety 7. BNL Wildfire Prevention Program			

Risk Assessment Following Mitigation

Consequence	() High	() Medium	(X) Low	() Extremely Low
Frequency	() Anticipated High	() Anticipated Medium	() Unlikely	(X) Extremely Unlikely
Risk Category	() High Risk	() Medium	() Low Risk	(X) Extremely Low

Is the mitigated hazard adequately controlled by existing BNL policies? Y/N Yes If No, roll up into ASE.
Is the hazard mitigation system needed for hazard control? Y/N No If Yes, need ASE requirement.

Table A6-3 Qualitative Risk Assessment for Prototype ERL – Electric Shock/Arc Flash

FACILITY NAME: Prototype ERL
SYSTEM: Facility
SUB-SYSTEM: Magnets, Power Supplies, Instrumentation
HAZARD: Electric Shock/Arc Flash from Exposed Conductors and Operating Breakers/Disconnects

Event	Worker contacts energized conductor and receives electrical shock or experiences arc flash while operating breakers/disconnects
Possible Consequences, Hazards	Shock, impact injury, arc flash burns
Potential Initiators	Worker falls, fails to control position of limbs or tools, equipment failure, improper work controls, improper PPE use

Risk Assessment Prior to Mitigation

Consequence	(X) High	() Medium	() Low	() Extremely Low
Frequency	(X) Anticipated High	() Anticipated Medium	() Unlikely	() Extremely Unlikely
Risk Category	(X) High Risk	() Medium	() Low Risk	() Extremely Low
Hazard Mitigation	1. Exposed conductors and terminals are covered or barriered for protection of personnel 2. Training for workers 3. Use of work planning, LOTO and Permits 4. Use of proper PPE and compliance with NFPA 70E 5. Magnets de-energized when routine work is done 6. Electrical equipment is NRTL, or review is performed for electrical safety on all non-NRTL and 'in-house' built equipment by a qualified Electrical Equipment Inspector			

Risk Assessment Following Mitigation

Consequence	() High	() Medium	() Low	(X) Extremely Low
Frequency	() Anticipated High	() Anticipated Medium	(X) Unlikely	() Extremely Unlikely
Risk Category	() High Risk	() Medium	() Low Risk	(X) Extremely Low

Is the mitigated hazard adequately controlled by existing BNL policies? Y/N Yes If No, roll up into ASE.
Is the hazard mitigation system needed for hazard control? Y/N No If Yes, need ASE requirement.

Table A6-4 Qualitative Risk Assessment for Prototype ERL – Radiation External to Enclosure

Facility Name: Prototype ERL
System: Areas External to Shielded Components
Sub-System: Prototype ERL shielding and shield penetrations
Hazard: Prompt Beam Radiation

Event	Credible beam control fault
Possible Consequences, Hazards	Unwarranted radiation exposure due to abnormal radiation levels outside beam line components, penetrations and chicanes
Potential Initiators	Failure of magnet or magnet power supply, ineffective or inefficient beam tuning

Risk Assessment Prior to Mitigation

Consequence	() High	() Medium	() Low	(X) Extremely Low
Frequency	(X) Anticipated High	() Anticipated Medium	() Unlikely	() Extremely Unlikely
Risk Category	() High Risk	() Medium	(X) Low Risk	() Extremely Low
Hazard Mitigation	1. Primary beam will not penetrate shield materials 2. Beam tuned at low intensity and beam intensity limits 3. Operator and physicist training 4. Review of design of shields and penetrations by C-AD RSC; review of fault studies 5. Radiological area postings 6. Klystron Room locked 7. Routine area radiation surveys 8. Periodic inspection of shielding to verify integrity 9. Interlocking radiation monitors			

Risk Assessment Following Mitigation

Consequence	() High	() Medium	() Low	(X) Extremely Low
Frequency	() Anticipated High	() Anticipated Medium	(X) Unlikely	() Extremely Unlikely
Risk Category	() High Risk	() Medium	() Low Risk	(X) Extremely Low

Is the mitigated hazard adequately controlled by existing BNL policies? Y/N Yes If No, roll up into ASE.
Is the hazard mitigation system needed for hazard control? Y/N No If Yes, need ASE requirement.

Table A6-5 Qualitative Risk Assessment for Prototype ERL – Radiation Inside Enclosure

FACILITY NAME: Prototype ERL
SYSTEM: Shielded Enclosures
SUB-SYSTEM: Prototype ERL Enclosure, Klystron Room
HAZARD: Prompt Beam Radiation inside Shielded Enclosures

Event	Person inside enclosure during operation
Possible Consequences, Hazards	Personal injury or death due to external prompt radiation associated with beam
Potential Initiators	Person inadvertently enters enclosure; person fails to leave before beam initiated

Risk Assessment Prior to Mitigation

Consequence	(X) High	() Medium	() Low	() Extremely Low
Frequency	() Anticipated High	(X) Anticipated Medium	() Unlikely	() Extremely Unlikely
Risk Category	() High Risk	(X) Medium	() Low Risk	() Extremely Low
Hazard Mitigation	1. Operating procedures 2. Worker / User training 3. Review of facility design by C-AD RSC 4. ERL Enclosure and Klystron Room sweep procedures 5. ACS door locks and other access controls 6. Audible/visual alarms initiated by ACS inside enclosures before beam initiation, allowing sufficient time for un-swept individuals to manually stop beam initiation or exit enclosure to stop beam initiation 7. ACS automatic interlock to stop beam if access violation 8. ACS controls critical devices to automatically confine beam to enclosure, thus keeping beam out of downstream section with personnel inside			

Risk Assessment Following Mitigation

Consequence	() High	() Medium	(X) Low	() Extremely Low
Frequency	() Anticipated High	() Anticipated Medium	() Unlikely	(X) Extremely Unlikely
Risk Category	() High Risk	() Medium	() Low Risk	(X) Extremely Low

Is the mitigated hazard adequately controlled by existing BNL policies? Y/N Yes If No, roll up into ASE.
Is the hazard mitigation system needed for hazard control? Y/N Yes If Yes, need ASE requirement.

Table A6-6 Qualitative Risk Assessment for Prototype ERL – Activation of Components

FACILITY NAME: Prototype ERL
SYSTEM: Beam Dump, Other Activated Components
SUB-SYSTEM: N/A
HAZARD: External Radiation from Activated Beam Dump, Activated Magnets and Other Components

Event	Worker / Physicist inside ERL Cave during beam off periods
Possible Consequences, Hazards	Excessive external dose
Potential Initiators	Improper work planning, procedure violation

Risk Assessment Prior to Mitigation

Consequence	() High	() Medium	() Low	(X) Extremely Low
Frequency	(X) Anticipated High	() Anticipated Medium	() Unlikely	() Extremely Unlikely
Risk Category	() High Risk	() Medium	(X) Low Risk	() Extremely Low
Hazard Mitigation	1. Beam tuning keeps activation of magnets and beam–line components to a minimum 2. Work planning prior to authorizing start of work 3. Radiological surveys of work areas 4. RWP issued prior to start of work 5. ALARA design and administrative controls 6. C-AD ALARA Committee reviews jobs and designs 7. Worker and operator training 8. Radiological postings warn personnel of high dose rates 9. Personnel entering High Radiation Areas wear alarming self-reading dosimeters			

Risk Assessment Following Mitigation

Consequence	() High	() Medium	() Low	(X) Extremely Low
Frequency	() Anticipated High	(X) Anticipated Medium	() Unlikely	() Extremely Unlikely
Risk Category	() High Risk	() Medium	() Low Risk	(X) Extremely Low

Is the mitigated hazard adequately controlled by existing BNL policies? Y/N Yes If No, roll up into ASE.
Is the hazard mitigation system needed for hazard control? Y/N No If Yes, need ASE requirement.

Table A6-7 Qualitative Risk Assessment for Prototype ERL – Conventional/Industrial Hazards

FACILITY NAME: Prototype ERL
SYSTEM: Entire Facility
SUB-SYSTEM: All Sub-systems
HAZARD: Noise, Pressure, Hazardous Atmospheres, Magnetic and RF Fields, Hoisting and Rigging Hazards, Heights, Cryogenic Fluids, Chemicals, Flammable / Explosive Gases, Falling Objects, Hot Surfaces, Trip Hazards, Welding/Cutting

Event	Injury resulting from industrial hazard
Possible Consequences, Hazards	Worker/physicist injury or death
Potential Initiators	Improper work planning, procedure violation

Risk Assessment Prior to Mitigation

Consequence	(X) High	() Medium	() Low	() Extremely Low
Frequency	(X) Anticipated High	() Anticipated Medium	() Unlikely	() Extremely Unlikely
Risk Category	(X) High Risk	() Medium	() Low Risk	() Extremely Low
Hazard Mitigation	1. Work planning prior to authorizing start of work 2. Worker operator training 3. Review and audit of conventional safety issues by C-AD staff and ESH experts during Tier 1, work planning and/or ESH appraisals 4. Design review of accelerator modifications by ASSRC and qualified engineers 5. Meeting safety requirements defined by BNL SBMS 6. Meeting requirements in 10CFR851 7. Environmental reviews 8. Manager work observations			

Risk Assessment Following Mitigation

Consequence	() High	() Medium	(X) Low	() Extremely Low
Frequency	() Anticipated High	(X) Anticipated Medium	() Unlikely	() Extremely Unlikely
Risk Category	() High Risk	() Medium	(X) Low Risk	() Extremely Low

Is the mitigated hazard adequately controlled by existing BNL policies? Y/N Yes If No, roll up into ASE.
Is the hazard mitigation system needed for hazard control? Y/N No If Yes, need ASE requirement.

Table A6-8 Qualitative Risk Assessment for Prototype ERL – Airborne Releases

FACILITY NAME: Prototype ERL
SYSTEM: Ventilation System and Vacuum Pump Emissions
SUB-SYSTEM: Exhaust Systems
HAZARD: Radioactive or Hazardous Materials

Event	Uncontrolled release of airborne radioactive or hazardous materials
Possible Consequences, Hazards	Adverse health effects to workers (public health effects not possible)
Potential Initiators	Improper work planning, violation of procedures, human error

Risk Assessment Prior to Mitigation

Consequence	() High	() Medium	() Low	(X) Extremely Low
Frequency	(X) Anticipated High	() Anticipated Medium	() Unlikely	() Extremely Unlikely
Risk Category	() High Risk	() Medium	(X) Low Risk	() Extremely Low
Hazard Mitigation	1. Radioactive airborne concentrations are insignificant 2. Work planning prior to authorizing start of work 3. Worker and operator training 4. Conduct of Operations system 5. Review of accelerator modifications by C-AD ASSRC 6. Review and monitoring of IH airborne hazards by C-AD ESSHQ Division 7. Meeting requirements defined by BNL SBMS 8. Environmental Management System 9. OSH Management System 10. Chemical Management System			

Risk Assessment Following Mitigation

Consequence	() High	() Medium	() Low	(X) Extremely Low
Frequency	() Anticipated High	(X) Anticipated Medium	() Unlikely	() Extremely Unlikely
Risk Category	() High Risk	() Medium	() Low Risk	(X) Extremely Low

Is the mitigated hazard adequately controlled by existing BNL policies? Y/N Yes If No, roll up into ASE.
Is the hazard mitigation system needed for hazard control? Y/N No If Yes, need ASE requirement.

Table A6-9 Qualitative Risk Assessment for Prototype ERL – Environmental

FACILITY NAME: Prototype ERL
SYSTEM: Cooling Water System
SUB-SYSTEM: Radioactive Water
HAZARD: Soil and Groundwater Contamination

Event	Spill of activated cooling water to soil
Possible Consequences, Hazards	Groundwater contamination, internal dose to BNL personnel or public
Potential Initiators	Water pressure boundary failure, procedure violation, improper work planning

Risk Assessment Prior to Mitigation

Consequence	() High	() Medium	() Low	(X) Extremely Low
Frequency	() Anticipated High	(X) Anticipated Medium	() Unlikely	() Extremely Unlikely
Risk Category	() High Risk	() Medium	(X) Low Risk	() Extremely Low
Hazard Mitigation	1. Radioactive liquid concentrations are insignificant 2. Work planning prior to authorizing start of work 3. Worker and operator training 4. Conduct of Operations system 5. Review of accelerator modifications by C-AD ASSRC 6. Meeting requirements defined by BNL SBMS 7. Environmental Management System 8. Chemical Management System 9. Extensive groundwater monitoring well system and groundwater-sampling program 10. Suffolk County Article 12 Code is followed in the design of cooling water systems and piping that contain significant amounts of tritium			

Risk Assessment Following Mitigation

Consequence	() High	() Medium	() Low	(X) Extremely Low
Frequency	() Anticipated High	() Anticipated Medium	(X) Unlikely	() Extremely Unlikely
Risk Category	() High Risk	() Medium	() Low Risk	(X) Extremely Low

Is the mitigated hazard adequately controlled by existing BNL policies? Y/N Yes If No, roll up into ASE.
Is the hazard mitigation system needed for hazard control? Y/N No If Yes, need ASE requirement.

Table A6-10 Qualitative Risk Assessment for Prototype ERL – Loss of Electrical Power

FACILITY NAME: Prototype ERL
SYSTEM: Entire Facility
SUB-SYSTEM: N/A
HAZARD: Hazards Produced As Power Is Lost To Equipment

Event	Loss of offsite power, local loss of power
Possible Consequences, Hazards	Personal safety hazards, programmatic loss
Potential Initiators	Equipment failure or operator error

Risk Assessment Prior to Mitigation

Consequence	() High	() Medium	() Low	(X) Extremely Low
Frequency	(X) Anticipated High	() Anticipated Medium	() Unlikely	() Extremely Unlikely
Risk Category	() High Risk	() Medium	(X) Low Risk	() Extremely Low
Hazard Mitigation	1. Integrated Safety Management program assures proper work planning prior to authorizing start of work 2. Worker and operator training 3. Review of conventional safety by C-AD ASSRC and BNL ESH Committees 4. Backup power supplied to required systems to reduce programmatic impact 5. ERL automatically shuts down upon loss of electrical power 6. Emergency lighting 7. BNL and ERL emergency procedures			

Risk Assessment Following Mitigation

Consequence	() High	() Medium	() Low	(X) Extremely Low
Frequency	() Anticipated High	(X) Anticipated Medium	() Unlikely	() Extremely Unlikely
Risk Category	() High Risk	() Medium	() Low Risk	(X) Extremely Low

Is the mitigated hazard adequately controlled by existing BNL policies? Y/N Yes If No, roll up into ASE.
Is the hazard mitigation system needed for hazard control? Y/N No If Yes, need ASE requirement.

Table A6-11 Qualitative Risk Assessment for Prototype ERL – Fire

FACILITY NAME: Prototype ERL
SYSTEM: Entire Facility
SUB-SYSTEM: N/A
HAZARD: Personal Injury or Equipment Damage

Event	Magnets, power and control cables, laboratory equipment combustion
Possible Consequences, Hazards	Injury/death, programmatic impact
Potential Initiators	Loss of cooling to magnets or power supplies, transient combustibles start fire which spreads, electrical component overheating, flammable/combustible gas ignition, human error

Risk Assessment Prior to Mitigation

Consequence	(X) High	() Medium	() Low	() Extremely Low
Frequency	() Anticipated High	(X) Anticipated Medium	() Unlikely	() Extremely Unlikely
Risk Category	() High Risk	(X) Medium	() Low Risk	() Extremely Low
Hazard Mitigation	1. Combustible loading is minimized 2. Periodic safety inspections 3. Safety training 4. Fire detection and suppression system 5. Design reviewed by BNL Fire Protection Engineer 6. Design meets NFPA requirements 7. Ventilation system 8. Conventional safety reviewed by C-AD ESRC 9. B912 FHA and implementation of protections			

Risk Assessment Following Mitigation

Consequence	() High	() Medium	(X) Low	() Extremely Low
Frequency	() Anticipated High	(X) Anticipated Medium	() Unlikely	() Extremely Unlikely
Risk Category	() High Risk	() Medium	(X) Low Risk	() Extremely Low

Is the mitigated hazard adequately controlled by existing BNL policies? Y/N Yes If No, roll up into ASE.
Is the hazard mitigation system needed for hazard control? Y/N Yes If Yes, need ASE requirement.

Table A6-12 Qualitative Risk Assessment for Prototype ERL – Oxygen Deficiency Hazards

FACILITY NAME: Prototype ERL
SYSTEM: ERL Facilities
SUB-SYSTEM: Cryogenic liquids, inert gas use/storage
HAZARD: Oxygen Deficiency

Event	Breathing air displaced causing reduced oxygen concentration
Possible Consequences, Hazards	Illness, asphyxiation
Potential Initiators	Significant release of gases to area or room

Risk Assessment Prior to Mitigation

Consequence	(X) High	() Medium	() Low	() Extremely Low
Frequency	() Anticipated High	(X) Anticipated Medium	() Unlikely	() Extremely Unlikely
Risk Category	() High Risk	(X) Medium	() Low Risk	() Extremely Low
Hazard Mitigation	1. ODH hazards analyzed and controls in place as per BNL SBMS requirements 2. Work planning and LOTO 3. Review of ODH hazards and controls by C-AD ASSRC 4. Review of ODH hazards and controls by BNL PCSS 5. Cryogenic pressure boundary designs meet ASME Code and appropriate consensus stands designs and testing requirements			

Risk Assessment Following Mitigation

Consequence	() High	(X) Medium	() Low	(X) Extremely Low
Frequency	() Anticipated High	() Anticipated Medium	(X) Unlikely	() Extremely Unlikely
Risk Category	() High Risk	() Medium	(X) Low Risk	() Extremely Low

Is the mitigated hazard adequately controlled by existing BNL policies? Y/N Yes If No, roll up into ASE.
Is the hazard mitigation system needed for hazard control? Y/N Yes If Yes, need ASE requirement.

APPENDIX 7

Cooling Water Activation

Water Activation in ERL Test Area

D. Beavis
May 5, 2006
Amended May 8, 2006

A simple estimate is made below for the expected radioactive concentrations in water at the ERL test area for the dipole magnets.

W.P. Swanson (Ref. 1) provides a simple method to estimate the radioactive saturation concentrations in water for electron beams stopped in water. Table XXXIIa lists the activation products per kW of stopped electrons in water (numbers provided below). It is suggested that for electron energies at or below 50 MeV that the numbers for O-15 be reduced by a factor of two and the other isotopes can have a larger reduction factor. A reduction of a factor of two will be used.

The Bremsstrahlung photons only have a small fraction of their path length in the cooling water of the dipole magnets. It the water is approximated as a sheet of water from the magnet mid-plane to the top of the coil, it has dimensions 6.85cm by 0.23 cm thick. To account for the small photon path length in water the activation will be reduced by the thickness divided by 2 radiation lengths (0.23cm/72cm). Coupled with the factor of two discussed above the total reduction in activity will be 0.0016. The routine loss of 50 MeV electron beam is expected to be 0.1 kW. It will be assumed that the beam loss occurs near a dipole. The activities with the expected beam loss and the total reduction factor are shown in the third column of the table below.

The expected saturation activities are:

Nuclide	Sat. Activity (GBq/(kW))	Reduced GBq
O-15	330	0.053
O-14	3.7	0.0006
N-13	3.7	0.0006
C-11	15.	0.0024
C-10	3.7	0.0006
Be-7	1.5	0.00024
H-3	7.4	0.0012

Several factors are needed to get the concentration and expected dose rates. From the numbers above the activity and dose will be dominated by the O-15 so we will ignore the other concentrations. The water system has a volume of approximately 2300 liters (600 gallons). The saturation concentration of O-15 is 23 Bq/cc. Estimates of the potential dose rate will require information on the water geometry and the conversion factor for gamma rate to dose. Following the discussion of Sullivan (Ref 2.) we will assume that the decays of O-15 will produce two 0.51 MeV gammas. We have a conversion factor (see Ref. 2) of 2.31*10**-10 rads/(gamma-cm**2).

The dose rate will be estimated at the surface for a 30cm diameter sphere of water and a 164 cm diameter sphere (entire water volume). The surface dose rates are (ignoring any self shielding):

164 cm diameter sphere 0.5 mrad/hr
30 cm diameter sphere 0.1 mrad/hr

Based on the approximations discussed above it is expected that the actual concentrations and dose rates will be smaller.

The tritium concentration can be obtained from the numbers above. The saturation activity is equal to the production rate. The production rate is therefore 1.2*10**6 H-3 atoms/s. The beam is expected to be operated for 40 hours per month and nine months per year for a total of 1.3*10**6 seconds per years. The water system has a volume of 2300 liters. The expected concentration of tritium in the cooling water after one year of operation is 6.8*10**8 H-3 atoms/liter. The activity is the decay constant times the number of atoms. The decay constant for tritium is 1.8*10**-9/sec and 1 Ci = 3.7*10**10 decays per second. The activity concentration for tritium is 33 pCi/liter after one year of operation.

References

1. W.P. Swanson, Radiological Safety Aspects of the Operation of Electron Linear Accelerators, Tech. Rep. Series No. 188, Int. At. Energy Agency, Vienna, 1979.
2. A.H. Sullivan, A guide to Radiation and Radioactivity Levels Near High Energy Particle Accelerators, 1992

APPENDIX 8

Air Activation

Air Activation in ERL Test Area

D. Beavis
May 3, 2006

A simple estimate is made below for the upper limit on the expected radioactive air concentrations in the ERL test area.

W.P. Swanson (Ref. 1) provides for a simple method to estimate the radioactive saturation concentrations in air that are produced by electron beams. It is assumed that the electron beam is incident on a high-Z thick target. Numbers for the saturation activity are given in Table XXXa of Reference 1. It is expected that the actually targeting conditions will create less activity. In addition, the close in shielding which is expected to attenuate the forward Bremsstrahlung for ERL will further reduce the air radioactive concentrations. To utilize Table XXXa of Reference 1 a few numbers are needed for the ERL test area.

I have approximated the room dimensions as 8.5m by 20.7m by 2.74 m. I will further assume that the average distance in air from a loss point to a wall is on the average 4 meters. Finally I will assume that the routine 50MeV loss is 100 Watts.

The expected saturation concentrations are:

Nuclide	Average room saturation activity Concentration (Bq/cc)
H-3	$4.2*10^{-3}$
Be-7	$8.3*10^{-4}$
C-11	$2. *10^{-5}$
N-13	$4. *10^{-1}$
O-15	$4.6*10^{-2}$
N-16	$1.7*10^{-5}$
Cl-38	$1.8*10^{-4}$
Cl-39	$1.3*10^{-3}$

References

1. W.P. Swanson, Radiological Safety Aspects of the Operation of Electron Linear Accelerators, Tech. Rep. Series No. 188, Int. At. Energy Agency, Vienna, 1979.

Accelerator Safety Envelope

Title of Facility: Prototype Energy Recovery Linac (ERL)

Date of Initial ASE: June 30, 2008

Subsequent Revision Dates:

Version of the SAD that the ASE applies to: Prototype ERL SAD 6-30-08

Signature of Preparer:

_____

Signature of Collider-Accelerator Associate Chair for Superconducting Accelerator R&D:

_____

Signature of Collider-Accelerator Department Chair:

_____

Signature of Nuclear and Particle Physics Associate Laboratory Director:

_____

Signature of Deputy Director for Operations:

_____

ASE Contents:

Section 1. Introduction 2
Section 2: BNL Safety Envelope Limits 2
Section 3: Corresponding Prototype ERL Safety Envelope Parameters 3
Prototype ERL Beam Limits in Terms of Electron Energy and Beam Power 3
Control of Beam Loss 4
Access Controls 4
Fire Protection 4

Section 4: Engineered Safety Systems Requiring Calibration, Testing, Maintenance, and Inspection 5
Section 5: Operations Envelop - Administrative Controls 5

Section 1. Introduction

The ASE Requirements herein define the conditions, safe boundaries, and the administrative controls necessary to ensure safe Prototype ERL operations and to reduce the potential risk to the public, workers and environment.

1.1 The reference to the method used by the Collider-Accelerator Department for change control of the ASE is the BNL Subject Area on Accelerator Safety.

1.2 A variation beyond the boundaries described in Sections 2, 3, and 4 of this ASE shall be treated as a violation of the ASE and shall be a reportable occurrence, as defined by the BNL SBMS Subject Area on Occurrence Reporting. A violation is defined as not satisfying a Requirement or its specific Authorized Alternative. C-A Department staff shall make notifications of occurrences according to the requirements in the C-A Operations Procedure Manual.

1.2.1 If a Requirement is not satisfied and it has a specific Authorized Alternative, implement the Authorized Alternate or stop the activity that uses the affected equipment within one hour.

1.3 Emergency actions may be taken that depart from these approved ASE Requirements when no actions consistent with the Requirements are immediately apparent and when these actions are needed to protect the public, worker and environmental safety. These actions shall be approved by the person in charge of facility safety, as defined in the operating procedures, when the emergency occurs and shall be reported to C-AD management within 2-hours.

Section 2: BNL Safety Envelope Limits

This section contains the absolute limits that BNL places on Prototype ERL operations to ensure that BNL meets regulatory limits established to protect our environment, public and staff/visitors and that those operations are conducted within the assumptions of the Prototype ERL safety analyses documented in the **Prototype ERL SAD, 6-30-08**. BNL Safety Envelope Limits for Prototype ERL operations are:

2.1. Less than 25 mrem in one year to individuals in other BNL Departments or Divisions adjacent to this Collider-Accelerator Department accelerator facility.

2.2. Less than 5 mrem in one year to a person located at the site boundary.

2.3. Offsite drinking water concentration and on-site potable well water concentration must not result in 4 mrem or greater to an individual in one year.

2.4. Less than 1250 mrem in one year to a Collider-Accelerator Department staff member.

2.5. Less than 10,000 pCi/L in the BNL sanitary sewer effluent due to liquid discharges from Prototype ERL facilities.

2.6. In order to protect groundwater, if the annual activity concentration of sodium-22 or tritium in leachate is calculated to exceed 5% of the Drinking Water Standard, then a cap shall be used unless BNL Management is convinced otherwise.[1]

2.7. All emissions from Prototype ERL facilities are managed in accordance with the Air Emissions subject area.[2] If emissions are anticipated to exceed 0.1 mrem per year to the Maximally Exposed Individual, actions will be taken to ensure operations comply with NESHAP requirements including continuous emissions monitoring and permitting.

Section 3: Corresponding Prototype ERL Safety Envelope Parameters

This section identifies the measurable limitations on critical operating parameters that, in conjunction with the specifically identified hazard control considerations established by the facility design and construction, ensure that Prototype ERL operations will not exceed the corresponding Safety Envelope Limits discussed in Section 2. These parameters are derived from the safety analyses described in the **Prototype ERL SAD, 6-30-08**. Prototype ERL safety envelope parameters are:

Prototype ERL Beam Limits in Terms of Electron Energy and Beam Power

3.1 Electron energy limit of 3.5 MeV for the super-conducting RF gun.

3.2 The power source of the superconducting gun is limited to delivering 1.2 MW of power to the gun.

3.3 Electron energy limit of 25 MeV for the Prototype ERL ring.

3.4 Electron beam power shall not exceed the equivalent of 10 MW of instantaneous power for the electron beam in the Prototype ERL ring.

3.5 The power source for the five-cell cavity will be limited to delivering a maximum of 60 kW of power to the cavity.

3.6 A beam power of 1.2 MW for a 3.5 MeV electron beam striking the beam dump.

[1] BNL SBMS Accelerator Safety Subject Area, Design Practice for Known Beam Loss Locations.
[2] BNL SBMS Subject Area, Radioactive Airborne Emissions.

Control of Beam Loss

3.7 Beam-loss-monitors, area-radiation monitors and area-radiation survey results shall be used in order to maintain beam loss "As Low as Reasonably Achievable" as defined in the BNL Radiological Manual.

Access Controls

3.8 The Access Controls System shall be functional during operations with beam.

3.9 During the running period, area radiation monitors that are interfaced with the Access Controls System shall be within their calibration date.

3.10 During the running period, the locations of area radiation monitors interfaced with the Access Control System are to be configuration controlled.

Fire Protection

3.11 During periods of beam operation, when access to the primary beam areas is prohibited the installed fire detection and protection systems shall be operable.

Authorized Alternative: Within 2 hours of discovery, the Department Chair or designee may allow partial or full inoperability of any fire detection or protection system for up to 80 hours with beam operations if the benefit of continuing Prototype ERL operations is judged to outweigh the potential risk of fire damage. Operating procedures shall specify the compensatory actions to be taken during inoperability.

3.12 Prototype ERL magnets and power supplies may be energized if the smoke detection system for the energized area can transmit an alarm to summon the BNL Fire/Rescue Group.

Authorized Alternative: The Operations Coordinator, ESH Coordinator or designee may allow partial or full inoperability of any fire detection system or manual alarm station in occupied areas as long as a Fire Watch is posted who can verbally communicate with the BNL Fire/Rescue Group by radio or phone.

Section 4: Engineered Safety Systems Requiring Calibration, Testing, Maintenance, and Inspection

The systems and requirements for calibration, testing, maintenance, accuracy or inspections necessary to ensure the integrity of the Prototype ERL safety envelope parameters during operations are given in this section:

4.1. The Access Control System shall be functionally tested in accordance with requirements in the BNL Radiation Control Manual.

4.2. Prototype ERL ventilation exhaust fans used to prevent an oxygen deficiency event shall undergo annual testing (not to exceed 15 months).

4.3. Prototype ERL fire protection shall undergo annual testing (not to exceed 15 months).

4.4. Area radiation monitors shall undergo annual testing (not to exceed 15 months).

4.5. Radiological barriers shall undergo annual visual inspection (not to exceed 15 months).

Section 5: Operations Envelop - Administrative Controls

Administrative controls necessary to ensure the integrity of the Prototype ERL safety envelope parameters during operations are:

5.1. Minimum Prototype ERL Control Room Staffing

5.1.1. Prototype ERL Control Room: one Trained Operator and one other person shall be on duty when Prototype ERL beam is in operation. During beam operations, one of the two must remain in the Prototype ERL Control Room at all times.

Authorized Alternative: If extra person is incapacitated, the remaining operator may continue operations as long as manning requirements are restored within two hours.

5.2. On-shift operations staff shall be trained and qualified on their safety, operational and emergency responsibilities. Records of training and qualification shall be maintained on the Brookhaven Training Management System (BTMS).

5.3. Work planning and control systems shall comply with the requirements in the C-A Operations Procedure Manual.

5.4. Environmental management shall comply with the requirements in the C-A Operations Procedure Manual.

5.5. Experiment modification and review shall comply with the requirements in the C-A Operations Procedure Manual.

5.5.1. Each upgrade in the Prototype ERL beam parameters or change of Prototype ERL configuration shall be reviewed before running with beam.

5.6. Annually, the C-AD Accelerator Systems Safety Review Committee shall review Prototype ERL's routine operations and facility for safety.

5.6.1. Prototype ERL may lie dormant for a period greater than one year between runs and does not require a review during the dormancy period.

5.7. Industrial hazards shall be controlled in accordance with the applicable portions of the BNL SBMS Subject Area.

5.8. Radiological area classifications during operations shall be in accord with requirements in the BNL Radiation Control Manual.

BROOKHAVEN
NATIONAL LABORATORY

Building 490
P.O. Box 5000
Upton, NY 11973-5000
Phone 631 344-7961
gunther@bnl.gov

managed by Brookhaven Science Associates
for the U.S. Department of Energy

Memo

date: *June 27, 2008*

to: *M. Bebon, Deputy Director for Operations*

from: *W. Gunther, Acting Chair Laboratory ESH Committee (LESHC)*

subject: *Request to Approve Prototype Energy Recovery Linac (ERL) Safety Documents*

The Laboratory ESH Committee (LESHC) recommends that you approve the Safety Assessment Document (SAD) for the Prototype ERL and the associated Accelerator Safety Envelope (ASE).

The LESHC reviewed documents dated May 2008 (Draft Prototype ERL SAD and ASE) at our meeting of May 29, 2008. As documented in our Meeting Minutes (08-13, attached), the Committee recommended approval of the SAD and ASE, subject to the conditions outlined in Section 2 of the Minutes and listed below:

2.1.1 Incorporate the detailed comments offered by the Committee during the page-by-page review (see 1.17.1-1.17.13). **Complete**, with the exception of the following which can only be done post commissioning after there is control of the beam.
- 1.17.2 The SRF gun dark current radiation levels will be verified (checked) with a survey.
- 1.17.3 The Fire Hazard Assessment of Bldg. 912 needs to be updated by the BNL Fire Protection Engineer, M. Kretschmann.
- 1.17.12 Administrative Controls section may be modified and Fault Studies added.

2.1.2 Incorporate the editorial changes submitted by the Committee members. **Complete**.

2.1.3 Validate the assumption that the ODH exhaust fans will start no later than 30 seconds after the oxygen sensors detect 18% oxygen concentration. **Open**. This will have to wait until the ODH monitors are installed in order to validate the assumption that the ODH exhaust fans start no later than 30 seconds after the oxygen sensors detect 18% oxygen concentration.

2.1.4 Include in the SAD a description of the configuration of the ODH sensors and the ODH exhaust fans. **Complete.** Description of configuration of ODH sensor location and capacity of ODH exhaust fans is now on page 99.

2.1.5 Insert the statement regarding the effect of using the new 10CFR835 neutron radiation weighting factors for the dose calculations in Chapter 4. **Complete**. 10CFR835 neutron radiation weighting factors are addressed on page 71.

2.1.6 Add the Fault Study Results (Appendix 5) after the fault studies have been conducted. (See 1.17.12) **Open**.

2.1.7 Submit the finalized SAD and ASE to the LESHC Secretary for verification of changes. **Complete**.

These Conditions have been completed to the Committee's satisfaction except as noted above. We recommend your approval of the Prototype ERL SAD.

The LESHC recommends that you forward both the approved SAD and ASE for the Prototype ERL to the Brookhaven Site Office for review. In accordance with DOE Order 420.2B, Safety of Accelerator Facilities, DOE approval of the SAD is not required. However, the related ASE requires approval by the DOE.

Copy to:

Committee Members
Meeting Attendees
D. Lowenstein
C. Parnell

Accelerator Safety Envelope

Title of Facility: Prototype Energy Recovery Linac (ERL)

Date of Initial ASE: December 30, 2008

Subsequent Revision Dates:

Version of the SAD that the ASE applies to: Prototype ERL SAD 6-30-08

Signature of Preparer:

_____

Signature of Collider-Accelerator Associate Chair for Superconducting Accelerator R&D:

_____

Signature of Collider-Accelerator Department Chair:

_____

Signature of Nuclear and Particle Physics Associate Laboratory Director:

_____

Signature of Deputy Director for Operations:

_____

ASE Contents:

Section 1. Introduction 2
Section 2: BNL Safety Envelope Limits 3
Section 3: Corresponding Prototype ERL Safety Envelope Parameters 3
Prototype ERL Beam Limits in Terms of Electron Energy and Beam Power 4
Control of Beam Loss 4
Access Controls 4
Fire Protection 5
Section 4: Engineered Safety Systems Requiring Calibration, Testing, Maintenance, and Inspection 5
Section 5: Operations Envelope - Administrative Controls 6

Section 1. Introduction

The bases for the ASE and the connections between the engineered and administrative bounding conditions are given in Chapter 5 of the Prototype ERL SAD 6-30-08.

The ASE is divided into 5 Sections. **Section 1** identifies the ASE change control method, the accountability policy for violations and the emergency action policy. Section 1 is followed by a hierarchy of boundaries that support safe operation. The top level limits are listed in **Section 2**. Section 2 defines the absolute limits for hazards not routinely encountered in an industrial operation such as ionizing radiation beams. **Section 3** limits are critical operating parameters that help ensure the Prototype ERL will not exceed the absolute limits in Section 2. **Section 4** of the ASE specifies the limits applicable to engineered safety systems used to maintain operations within the limits in Sections 2 and 3. Engineered safety systems require calibration, testing, maintenance, and inspection. The frequency of testing and calibration is specified in Section 4.

Section 5 is an Operations Envelope that helps ensure the ASE will not be exceeded. Section 5 defines practices that help limit both not-routinely and routinely encountered hazards in an industrial operation (e.g., Work Planning). Variations of operating parameters within the Operations Envelope are considered normal operations. Variation outside the Operations Envelope but within the ASE Sections 2, 3 and 4 limits merits appropriate attention; however, it does not require termination of Prototype ERL activities or notification of DOE.

1.1 The reference to the method used by the Collider-Accelerator Department for change control of the ASE is the BNL Subject Area on Accelerator Safety.

1.2 A variation beyond the boundaries described in Sections 2, 3, and 4 of this ASE shall be treated as a violation of the ASE and shall be a reportable occurrence, as defined by the BNL SBMS Subject Area on Occurrence Reporting. A violation is defined as not satisfying a Requirement or its specific Authorized Alternative. C-A Department staff shall make notifications of occurrences according to the requirements in the C-A Operations Procedure Manual.

1.2.1 If a Requirement is not satisfied and it has a specific Authorized Alternative, implement the Authorized Alternate or stop the activity that uses the affected equipment within one hour.

1.3 Emergency actions may be taken that depart from these approved ASE Requirements when no actions consistent with the Requirements are immediately apparent and when these actions are needed to protect the public, worker and environmental safety. These actions shall be approved by the person in charge of facility safety, as defined in the operating procedures, when the emergency occurs and shall be reported to C-AD management within 2-hours.

Section 2: BNL Safety Envelope Limits

This section contains the absolute limits that BNL places on Prototype ERL operations to ensure that BNL meets regulatory limits established to protect our environment, public and staff/visitors and that those operations are conducted within the assumptions of the Prototype ERL safety analyses documented in the Prototype ERL SAD, 6-30-08. BNL Safety Envelope Limits for Prototype ERL operations are:

2.1. Less than 25 mrem in one year to individuals in other BNL Departments or Divisions adjacent to this Collider-Accelerator Department accelerator facility.

2.2. Less than 5 mrem in one year to a person located at the site boundary.

2.3. Offsite drinking water concentration and on-site potable well water concentration must not result in 4 mrem or greater to an individual in one year.

2.4. Less than 1250 mrem in one year to a Collider-Accelerator Department staff member.

2.5. Less than 10,000 pCi/L in the BNL sanitary sewer effluent due to liquid discharges from Prototype ERL facilities.

2.6. In order to protect groundwater, if the annual activity concentration of sodium-22 or tritium in leachate is calculated to exceed 5% of the Drinking Water Standard, then a cap shall be used unless BNL Management is convinced otherwise.[1]

2.7. All emissions from Prototype ERL facilities are managed in accordance with the Air Emissions subject area.[2] If emissions are anticipated to exceed 0.1 mrem per year to the Maximally Exposed Individual, actions will be taken to ensure operations comply with NESHAP requirements including continuous emissions monitoring and permitting.

In order to assist C-AD in verifying and auditing ASE bounding conditions in Section 2, a Compliance Implementation Matrix identifying the ASE requirement, the implementing

[1] BNL SBMS Accelerator Safety Subject Area, Design Practice for Known Beam Loss Locations.
[2] BNL SBMS Subject Area, Radioactive Airborne Emissions.

procedure(s) and the responsible persons is maintained by C-AD management along with the bases for each ASE requirement.

Section 3: Corresponding Prototype ERL Safety Envelope Parameters

This section identifies the measurable limitations on critical operating parameters that, in conjunction with the specifically identified hazard control considerations established by the facility design and construction, ensure that Prototype ERL operations will not exceed the corresponding Safety Envelope Limits discussed in Section 2. These parameters are derived from the safety analyses described in the Prototype ERL SAD, 6-30-08. Prototype ERL safety envelope parameters are:

Prototype ERL Beam Limits in Terms of Electron Energy and Beam Power

3.1 Electron energy limit of 3.5 MeV for the super-conducting RF gun.

3.2 The power source of the superconducting gun is limited to delivering 1.5 MW of power to the gun.

3.3 Electron energy limit of 25 MeV for the Prototype ERL ring.

3.4 Electron beam power shall not exceed the equivalent of 10 MW of instantaneous power for the electron beam in the Prototype ERL ring.

3.5 The power source for the five-cell cavity will be limited to delivering a maximum of 60 kW of power to the cavity.

3.6 A beam power of 1.5 MW for a 3.5 MeV electron beam striking the beam dump.

The above limits are the maximum beam energy or beam power the Prototype ERL is capable of and cannot be exceeded without changing the structures, systems and components (SSC). Changing ERL prototype SSC requires authorization by C-AD management.

Control of Beam Loss

3.7 Beam-loss-monitors, area-radiation monitors and area-radiation survey results shall be used in order to maintain beam loss “As Low as Reasonably Achievable” as defined in the BNL Radiological Manual. The objective for controlling personnel exposure is to maintain exposure levels below an average of 0.5 mrem per hour, which is to be averaged over one work-month (80 mrem), and be as far below this average as is reasonably achievable.

Access Controls

3.8 The Access Controls System shall be functional during operations with beam. That is, locked gates to the accelerator enclosure shall turn the beam off if unlocked, unfastened or opened when beam is on.

3.9 During the running period, area radiation monitors that are interfaced with the Access Controls System shall be within their calibration date.

3.10 During the running period, the locations of area radiation monitors interfaced with the Access Control System are to be configuration controlled.

Fire Protection

3.11 During periods of beam operation, when access to the primary beam areas is prohibited the installed fire detection and protection systems shall be operable.

Authorized Alternative: Within 2 hours of discovery, the Department Chair or designee may allow partial or full inoperability of any fire detection or protection system for up to 80 hours with beam operations if the benefit of continuing Prototype ERL operations is judged to outweigh the potential risk of fire damage. Operating procedures shall specify the compensatory actions to be taken during inoperability.

3.12 Prototype ERL magnets and power supplies may be energized if the smoke detection system for the energized area can transmit an alarm to summon the BNL Fire/Rescue Group.

Authorized Alternative: The Operations Coordinator, ESH Coordinator or designee may allow partial or full inoperability of any fire detection system or manual alarm station in occupied areas as long as a Fire Watch is posted who can verbally communicate with the BNL Fire/Rescue Group by radio or phone.

In order to assist C-AD in verifying and auditing ASE bounding conditions in Section 3, a Compliance Implementation Matrix identifying the ASE requirement, the implementing procedure(s) and the responsible persons is maintained by C-AD management along with the bases for each ASE requirement.

Section 4: Engineered Safety Systems Requiring Calibration, Testing, Maintenance, and Inspection

The systems and requirements for calibration, testing, maintenance, accuracy or inspections necessary to ensure the integrity of the Prototype ERL safety envelope parameters during operations are given in this section:

4.1. The Access Control System shall be functionally tested in accordance with requirements in the BNL Radiation Control Manual.

4.2. Prototype ERL ventilation exhaust fans used to prevent an oxygen deficiency event shall undergo annual testing (not to exceed 15 months).

4.3. Prototype ERL fire protection shall undergo annual testing (not to exceed 15 months).

4.4. Area radiation monitors shall undergo annual testing (not to exceed 15 months).

4.5. Radiological barriers shall undergo annual visual inspection (not to exceed 15 months).

In order to assist C-AD in verifying and auditing ASE bounding conditions in Section 4, a Compliance Implementation Matrix identifying the ASE requirement, the implementing procedure(s) and the responsible persons is maintained by C-AD management along with the bases for each ASE requirement.

Section 5: Operations Envelope - Administrative Controls

Administrative controls necessary to ensure the integrity of the Prototype ERL safety envelope parameters during operations are:

5.1. Minimum Prototype ERL Control Room Staffing

5.1.1. Prototype ERL Control Room: one Trained Operator and one other person (i.e., ERL operator-in-training or ERL physicist) shall be on duty when Prototype ERL beam is in operation. During beam operations, one of the two must remain in the Prototype ERL Control Room at all times.

Authorized Alternative: If extra person (i.e., ERL operator-in-training or ERL physicist) is incapacitated, the remaining operator may continue operations as long as manning requirements are restored within two hours.

5.2. On-shift operations staff shall be trained and qualified on their safety, operational and emergency responsibilities. Records of training and qualification shall be maintained on the Brookhaven Training Management System (BTMS).

5.3. Work planning and control systems shall comply with the requirements in the C-A Operations Procedure Manual.

5.4. Environmental management shall comply with the requirements in the C-A Operations Procedure Manual.

5.5. Experiment modification and review shall comply with the requirements in the C-A Operations Procedure Manual.

5.5.1. Each upgrade in the Prototype ERL beam parameters or change of Prototype ERL configuration shall be reviewed before running with beam.

5.6. Annually, the C-AD Accelerator Systems Safety Review Committee shall review Prototype ERL's routine operations and facility for safety.

5.6.1. Prototype ERL may lie dormant for a period greater than one year between runs and does not require a review during the dormancy period.

5.7. Industrial hazards shall be controlled in accordance with the applicable portions of the BNL SBMS Subject Area.

5.8. Radiological area classifications during operations shall be in accord with requirements in the BNL Radiation Control Manual.

In order to assist C-AD in verifying and auditing ASE bounding conditions in Section 5, a Compliance Implementation Matrix identifying the ASE requirement, the implementing procedure(s) and the responsible persons is maintained by C-AD management along with the bases for each ASE requirement.

Accelerator Safety Envelope

Title of Facility: Prototype Energy Recovery Linac (ERL)

Date of Initial ASE: December 30, 2008

Subsequent Revision Dates:

Version of the SAD that the ASE applies to: Prototype ERL SAD 6-30-08

Signature of Preparer:

Edward T Lessard

Signature of Collider-Accelerator Associate Chair for Superconducting Accelerator R&D:

Ilan Ben-Zvi

Signature of Collider-Accelerator Department Chair:

Signature of Nuclear and Particle Physics Associate Laboratory Director:

Steven E. Vigdor

Signature of Deputy Director for Operations:

BROOKHAVEN
NATIONAL LABORATORY

Building 490
P.O. Box 5000
Upton, NY 11973-5000
Phone 631 344-7961
gunther@bnl.gov

managed by Brookhaven Science Associates
for the U.S. Department of Energy

Memo

date: *June 27, 2008* *Revision: January 8, 2009*

to: *M. Bebon, Deputy Director for Operations*

from: *W. Gunther, Acting Chair Laboratory ESH Committee (LESHC)*

subject: *Request to Approve Prototype Energy Recovery Linac (ERL) Safety Documents*

The Laboratory ESH Committee (LESHC) recommends that you approve the Safety Assessment Document (SAD) for the Prototype ERL and the associated Accelerator Safety Envelope (ASE).

The LESHC reviewed documents dated May 2008 (Draft Prototype ERL SAD and ASE) at our meeting of May 29, 2008. As documented in our Meeting Minutes (08-13, attached), the Committee recommended approval of the SAD and ASE, subject to the conditions outlined in Section 2 of the Minutes and listed below:

2.1.1 Incorporate the detailed comments offered by the Committee during the page-by-page review (see 1.17.1-1.17.13). **Complete**, with the exception of the following which can only be done post commissioning after there is control of the beam.
- 1.17.2 The SRF gun dark current radiation levels will be verified (checked) with a survey.
- 1.17.3 The Fire Hazard Assessment of Bldg. 912 needs to be updated by the BNL Fire Protection Engineer, M. Kretschmann.
- 1.17.12 Administrative Controls section may be modified and Fault Studies added.

2.1.2 Incorporate the editorial changes submitted by the Committee members. **Complete**.

2.1.3 Validate the assumption that the ODH exhaust fans will start no later than 30 seconds after the oxygen sensors detect 18% oxygen concentration. **Open**. This will have to wait until the ODH monitors are installed in order to validate the assumption that the ODH exhaust fans start no later than 30 seconds after the oxygen sensors detect 18% oxygen concentration.

2.1.4 Include in the SAD a description of the configuration of the ODH sensors and the ODH exhaust fans. **Complete.** Description of configuration of ODH sensor location and capacity of ODH exhaust fans is now on page 99.

2.1.5 Insert the statement regarding the effect of using the new 10CFR835 neutron radiation weighting factors for the dose calculations in Chapter 4. **Complete**. 10CFR835 neutron radiation weighting factors are addressed on page 71.

2.1.6 Add the Fault Study Results (Appendix 5) after the fault studies have been conducted. (See 1.17.12) **Open.**

2.1.7 Submit the finalized SAD and ASE to the LESHC Secretary for verification of changes. **Complete.**

These Conditions have been completed to the Committee's satisfaction except as noted above. We recommend your approval of the Prototype ERL SAD.

Since the May 29, 2008 meeting, the DOE Facility Representative and the C-AD have agreed to changes in the ASE. C-AD raised the maximum gun power from 1.2 MW to 1.5 MW in Section 3.2. An Unreviewed Safety Issue (USI) regarding this change to the SAD was written and approved by C-AD. This change in the gun power-limit does not impact Prototype ERL shielding. Additionally, the changes recommended by the DOE Facility Representative do not result in significant changes to the limits or safety practices as described in the ASE recommended for approval last June.

The LESHC recommends that you forward the approved SAD, the revised ASE and the USI for the Prototype ERL to the Brookhaven Site Office for review. In accordance with DOE Order 420.2B, Safety of Accelerator Facilities, DOE approval of the SAD is not required. However, the related ASE requires approval by the DOE.

Copy to:

Committee Members
Meeting Attendees
D. Lowenstein
C. Parnell

Department of Energy
Brookhaven Site Office
P.O. Box 5000
Upton, New York 11973

Mr. Michael J. Bebon
Brookhaven Science Associates, LLC
Brookhaven National Laboratory
Upton, New York 11973

FEB - 3 2009

Dear Mr. Bebon:

SUBJECT: APPROVAL OF THE PROTOTYPE ENERGY RECOVERY LINAC (ERL) ACCELERATOR SAFETY ENVELOPE (ASE)

Reference: Letter, from M. Bebon, BSA to M. Holland, SC-BHSO, Subject: Request for Approval of Prototype Energy Recovery Linac Accelerator Safety Envelope dated December 30, 2008.

The Department of Energy (DOE) Brookhaven Site Office (BHSO) has reviewed your request for approval of the ERL ASE, including a review of all associated documents. Based on our review, the ERL ASE and the Unreviewed Safety Issue (USI) for the gun power physical limit increase are approved.

While the ASE meets the requirements of DOE O 420.2B, as continuous improvement and to help ensure satisfactory review outcomes in the future, we request that the following be considered during the next triennial review of the ERL SAD/ASE:

- Utilize a more robust and logical hazard analysis in the SAD to identify the individual credited controls that will become the bounding conditions and limitations of the ASE.

- Eliminate superfluous information from the ASE such as generic limits and industrial hazards that are not unique to the accelerator facility.

Future DOE BHSO authorizations to commission/operate ERL will be based on a review of the Authorization Package including a validation of the adequacy of the facility safety basis. If you have any questions, please contact Patrick Sullivan, of my staff at extension 4092.

Sincerely,

M. Holland

Michael D. Holland
Site Manager

cc: R. Desmarais, SC-BHSO
M. Dikeakos, SC-BHSO
P. Sullivan, SC-BHSO
R. Karol, BSA
E. Lessard, BSA
D. Lowenstein, BSA
C. Parnell, BSA

Lessard, Edward T

From: Conrad, Cheryl S
Sent: Thursday, January 08, 2009 2:33 PM
To: Beavis, Dana; Conrad, Cheryl S; Gaffney, Michael; Gill, Ronald L; Gunther, William E; Hoey, Steven A; Kahnhauser, Henry F; Kane, Steven F; Karol, Raymond C; Lee, Robert J; Lessard, Edward T; Tuozzolo, Joseph E
Cc: Parnell, Carol; Bernholc, Nicole M; Costa, Raymond
Subject: LESHC 08-13 Prototype ERL SAD and ASE Review - Update
Attachments: Merged June and December 2008 ERL ASE showing changes.doc; USI Changes to ERL SAD.pdf

Follow Up Flag: Follow up
Flag Status: Flagged

Categories: Orange Category

Hi everyone,

For your information, below is an update of the review of the Prototype ERL SAD and ASE that the LESHC reviewed in June 2008.

After the June 2008 meeting, the local DOE Representative at C-AD asked that C-AD change the ASE structure and content; although this ASE format is one that the LESHC had recommended for approval many times before at BNL. After negotiations, C-AD ended up making changes to the Prototype ERL ASE.

The attached merged document with highlights showing changes reflects the before and after versions of the Prototype ERL ASE. The before version is the one that the LESHC reviewed and recommended for approval last June. Both versions are fully signed through Mike Bebon. The changes are summarized as follows:

1) An explanation of the 5 Sections of an ASE was added (Section 1); apparently this is not clear in SBMS
2) A reference to a new document titled “Compliance Implementation Matrix” was added; C-AD created this matrix to help an auditor find certain C-AD OPM procedures, procedures that are derived from the ASE (2.7)
3) A statement that maximum values in the ASE cannot be exceeded (3.6)
4) A parameter for ALARA that an auditor can use to measure against (3.7)
5) Clarification that access control means locked gates (3.8)
6) Clarification on the identity of a second operator (5.1)

C-AD also raised the maximum gun power from 1.2 MW to 1.5 MW (Section 3.2). Ray Karol wrote up a USI for this change to the SAD, a USI that the BHSO will accept. This change in the gun power-limit does not impact Prototype ERL shielding. See attached USI file.

The changes were examined by the acting Chair (W. Gunther) and not deemed significant to require another review by the Committee.

Should you find any editorial corrections in the documents, you can let me know. C-AD will be revising the SAD for the whole C-AD complex including the ERL in 2009 (C-AD’s 5-year cycle is due), and editorial changes will be made at that time.

Thank you.

Cheryl

C-A Unreviewed Safety Issue (USI) Form

Title of USI: ERL SAD Chapter 4, Safety Analysis - ERL Gun Power Increase from 1.2 to 1.5 MW for Dose and Dose Rate Calculations

Description of USI (use attachments if necessary):
In order to conservatively estimate dose and dose rates from 3.5 MeV electrons the ERL gun power has been increased from 1.2 MW to 1.5 MW so that dose and dose rate estimates are based on a power level that exceeds the gun capabilities.
Chapter 4 of the ERL SAD is attached which includes this power change.

Title and Date of Relevant SAD: ERL SAD, June 30, 2008

Committee Chair or ESSHQ Division Head must initial all items. Leave no blanks:

ITEM	APPLIES	DOES NOT APPLY
Decision to not revise the current SAD and/or ASE at this time:	RCK	
The hazard associated with the proposed work or event is covered within an existing SAD and/or ASE.	RCK	
SAD Title and Date: Prototype ERL SAD, June 30, 2008		
This Form and attachments, if necessary, shall be used to document the USI until the next revision of the appropriate SAD.	RCK	
Decision to submit a revised SAD and/or ASE to the BNL ESH Committee:	RCK	
The hazard associated with the proposed work is not appropriately included in an SAD.		RCK

Signature on File 12-26-2008
Signature of C-A Committee Chair or C-A ESSHQ Division Head Date

Signature on File 12-26-2008
Signature of C-A Associate Chair for ESSHQ Date

4.Safety Analysis

The level of detail included was correlated with the size, complexity, hazards, potential impacts and risks associated with Prototype ERL facility operation. The hazards analysis is comprehensive, and explored the full range of consequences each hazard could have on workers, the public, and the environment. It was based on sound assumptions so that effort would be focused on analysis of credible and realistic consequences. As allowed by DOE G 420.2-1[17], this SAD references a survey of the hazards present at the accelerator facility, including prompt radiation, radioactive materials, non-ionizing radiation, hazardous materials, and sources of energy. The hazard evaluation information in the SAD includes credible initiating events, the assumptions used in estimating the consequences, and controls required to reduce hazards and associated risk to acceptable levels. Identified controls were evaluated to determine if any were credited controls.

A credited control is one determined through hazard evaluation to be essential for safe operation directly related to the protection of personnel or the environment. The credited controls are a limited subset of the total controls employed for overall facility operation. Credited controls were assigned a higher degree of operational assurance than other controls. For example if a system, equipment or practice actively or passively protects workers and/or staff from a significant hazard, then it has formal administrative controls or limits for operation. These credited controls are treated specially and considered for incorporation in the ASE, appropriate procedures and/or quality assurance.

[17] Accelerator Facility Safety Implementation Guide for DOE O 420.2B, Safety Of Accelerator Facilities

Implicit in the above discussion is that analysis of hazards, consequences, and the types and reliability of controls, involved professional judgment. This judgment was based on sound technical and/or scientific principles using accepted methods for hazard analysis suitable for the types and magnitudes of hazards present.

4.1. Identification of Potentially Hazardous Conditions from Radiation Associated With Operation

At ERL, the primary electron beam is only present when the machine is operating. Before interacting at a particular location, the accelerated beam is essentially mono-energetic, consisting of only electrons. If the electrons stop in the accelerator equipment, beam stop or shielding, then electromagnetic cascades and Bremsstrahlung radiation can occur. For lower energy electrons, 25 MeV or less, Bremsstrahlung radiation contributes substantially to the energy loss by electrons in matter. Bremsstrahlung radiation is emitted by a decelerating charged particle or by a charged particle changing direction. Bremsstrahlung is German for braking radiation, and in particular, the term is used for photon radiation emitted by electron decelerations when electrons pass through the electric field of atomic nuclei. This produces photon radiation distributed over a wide range of energies.

If electrons are accelerated in a magnetic field, they can also produce photons and this is termed synchrotron radiation. Synchrotron radiation from this accelerator is produced when the electron beam circulates in the magnetic field of the ring. This synchrotron radiation is low energy and is attenuated by the shielding used for Bremsstrahlung.

When the machine is operating, the radiation outside the shielding is dominated by indirectly ionizing radiation such as photons and neutrons that penetrate the shielding. Neutrons are produced from the higher-energy Bremsstrahlung photons that interact with nuclei that make up the concrete shield. Because these are lower-energy Bremsstrahlung photons, at least in terms of causing nuclear reactions, the dominant neutron-producing mechanism is the giant nuclear resonance. Among the best-known example is the giant electric dipole (E1) resonance, which is concentrated in the energy region of 10 to 30 MeV for most, if not all, nuclei. In the E1 resonance, all protons and all neutrons in the nucleus oscillate with opposite phase, which produces a time-varying electric dipole moment, which acts as an effective antenna for absorbing or radiating gamma rays. The E1 resonance is the best known of the nuclear giant resonances. It is the dominant feature in reactions initiated by gamma rays. The absorption of a gamma ray induces the giant E1 oscillation, which breaks up, in this case, by emitting neutrons. This resonance is also the dominant feature in the reverse process, in which gamma rays are produced by proton and neutron bombardments of nuclei.[18]

The neutron spectrum from the E1 resonance process is often compared to a fission spectrum and is well described by a Maxwellian distribution. Shielding is relatively straightforward. The neutron-dose-equivalent tenth-value-layer for ordinary and heavy concrete is about 100 g cm^{-2} for this neutron spectrum.[19]

[18] http://www.answers.com/topic/giant-nuclear-resonance?cat=technology, January 2008.
[19] NCRP 144, Radiation Protection for Particle Accelerator Facilities, December 2003.

Neutrons can induce radioactivity in the Prototype ERL machine components, cooling water and nearby equipment. This neutron activation is expected to be insignificant at ERL because the electron energies into the beam dump are well below most activation thresholds. Residual radiation from the dump will be verified by radiation surveys near the beam dump after the machine is turned off, and by cooling water sampling and analysis. Radiation controls are in place as required during entry into the Prototype ERL following machine shutdown for inspection, maintenance, modification or repair activities. Because of the insignificant activation at ERL no contamination issues are expected.

The principal radiation hazards at Prototype ERL derive from the primary electron beam flux and duty-cycle of the machine. Listed in order of relative importance to health, these hazards include:

- Potential inadvertent exposure of workers to primary electron beam or RF induced x-rays from the electron gun or 5-cell accelerating cavities

  NOTE: The access controls system and the enclosed beam pipe prevent exposure of personnel to this beam. The probability of unsafe failure of the access controls system that would allow an overexposure from primary beam or Bremsstrahlung is so low[20] that this hazard is not credible and further analysis is not performed.

- Exposure to photon and neutron radiation near labyrinths and penetrations
- Exposure to photon and neutron radiation that penetrates through the shielding
- Exposure to skyshine radiation

[20] D. Beavis, Failures in the PLC Based Radiation Safety Systems, October 31, 2000; D. Beavis, Frequency of Interlock Testing, November 6, 2000; D. Beavis, Estimation of Time to Loss of Protection-The D-Downstream Gate, November 13, 2000.

NOTE: Escaping neutrons and gammas through thin parts of the shield or roof causes skyshine radiation; that is, the escaping radiation interacts with atoms in the air column above the accelerator and some of the resulting lower-energy radiation is scattered downward from these interactions. Skyshine radiation may extend many tens of meters from this accelerator. The Prototype ERL roof shields are inaccessible, via administrative access controls, during operations. The concern here are the dose rates from skyshine in the Prototype ERL Control Room, B966 and B940 due to the expected occupancy of these areas relative to other areas surrounding ERL. However, this source is expected to be insignificant during routine beam operations. This will be confirmed during routine radiation surveys and by environmental thermo-luminescent dosimeters (TLDs) placed around the facility.

- Exposure to activated air
- Exposure to potential residual radiation induced in machine components
- Exposure to or inadvertent release of activated cooling water to the environment

The ERL is an experimental machine that may undergo changes in operations as more is learned about its operating characteristics. If any of these changes involve a potential change in the radiation hazards, appropriate work planning and safety-committee reviews will take place to ensure that the BNL Radiological Control Manual requirements are met and ASE limits continue to be satisfied. If the ASE limits need to be revised to allow more flexibility in research/operations, the proposed ASE changes will be submitted to DOE for approval before the changes occur.

Estimates of the expected dose rates from Prototype ERL operations are described below. During commissioning, radiation surveys will be conducted to validate these estimates. The expectation is that actual dose rates will be below these computed does rates. If necessary, the shielding will be appropriately modified to ensure that routine and faulted doses and dose rates will be acceptable for full power operation of Prototype ERL.

Table 4.1 Parameters of the Prototype ERL in Building 912

	High charge mode	Low charge mode
Injection energy, MeV	3.5	3.5
Maximum beam energy, MeV	25	25
Average beam current, mA	100-200	10-200
Bunch rep-rate, MHz	9.4	9.4-700
Charge per bunch, nC	10 or more	~0.3 -1
Efficiency of current recovery	>99.95%	>99.95%

The proposed ASE limitations for the Prototype ERL are summarized below. It is noted that rated power sources for Prototype ERL, 1 MW for the gun and 50 kW for the 5-cell cavity, were conservatively increased to levels beyond their capacity to estimate dose and dose rates. The gun power was assumed to be 1.5 MW and the 5-cell cavity 60 kW. Prototype ERL power sources are not designed to produce this increased power; rather, the shielding was analyzed at this increased power level. Thus, a safety margin of 1.2 to 1.5 has been included in the dose and dose rate calculations in this SAD:

Deleted: 20%

- Electron energy limit of 3.5 MeV for the superconducting RF gun
- The power source of the superconducting gun is limited to delivering 1.5 MW of power to the gun
- Electron energy limit of 25 MeV for the ERL ring

Deleted: 2

- Electron beam power shall not exceed the equivalent of 10 MW of instantaneous power for the electron beam in the Prototype ERL ring
- The power source for the five-cell cavity will be limited to delivering a maximum of 60 kW of power to the cavity
- A beam power of 1.5 MW for electron beam striking the beam dump

Deleted: 2

4.1.1. Unshielded Source Radiation Levels

Based on average continuous beam current of 200 mA, the average beam power is 0.7 MW at 3.5 MeV and 5 MW at 25 MeV. For the purpose of setting limits in the ASE, 1.5 MW at 3.5 MeV and 10 MW at 25 MeV were chosen as the maximum beam powers.

Deleted: 2

Continuous beam loss in the electron ring is limited via the physics of the Prototype ERL. If beam in the ring is totally intercepted, continuous beam loss in the ring vanishes since no energy is recovered to accelerate the next pulse in the CW train of pulses coming from the electron gun. This self-limiting effect is one of the peculiarities of an Prototype ERL ring. The maximum continuous beam loss is limited by the power that can be restored by the 5-cell cavity power supply, which is 50 kW. As noted previously, for dose and dose rates calculations, a factor of 1.2 or 60 kW is assumed to be the restoring power.

On the way to the dump, it is not expected that the entire 3.5 MeV beam at average current can be lost at any single point for an extended period of time. In radiation protection it is a conservative practice to assume that all electron beams produce thick-target Bremsstrahlung in

high-Z material, regardless of the actual thickness or type of target. Thick target curves (see figure that follows)[21] for Bremsstrahlung radiation from NCRP 144 Figure 3.5 show that a 3.5 MeV beam at 1.5 MW can produce instantaneous absorbed dose rates of 6.25x10^7 rad/h at 1 meter in the forward direction and 10^7 rad/h at 1 meter in the transverse direction. The 3.5 MeV beam has insufficient energy to cause a neutron dose contribution via the photon-giant-nuclear-resonance process. [22]

Deleted: 2
Deleted: 5
Deleted: 8x
Deleted: 6

Routine loss of a small fraction of the 3.5 MeV beam is expected. In normal operations the losses of the 3.5 MeV beam will be dominated by loss at the collimator. One micro-amp of beam is anticipated to be routinely lost on the collimator. One micro-amp continuous 3.5 MeV beam loss, which is a beam power of 0.0035 kW, equates to a forward absorbed dose rate of 140 rad/h and a transverse absorbed dose rate of 28 rad/h at 1 meter with no shielding. The collimator is located in the transport between the gun and the first chicane.

The 3.5 MeV beam is not intended to be transported into the 25 MeV transport ring after the first bend after the superconducting RF cavity. For radiation safety purposes, interlocks prevent the transport of the 3.5 MeV beam past this magnet.

The electron gun beam power will eventually be transported to the beam dump. From Table 4.1, the average beam current is 200 milliamps. Two-hundred milliamps of continuous 3.5 MeV beam loss on the dump, which is a beam power of 700 kW, equates to a forward absorbed

[21] NCRP Report No. 144, Radiation Protection for Particle Accelerator Facilities, Figure 3.5
[22] Ibid, Figure 3.12

dose rate of 2.8×10^7 rad/h and a transverse absorbed dose rate of 5.6×10^6 rad/h at 1 meter with no shielding.

The high energy electron beam, 25 MeV, is separated from the low energy 3.5 MeV beam in the chicanes before and after the SRF cavity. Conservatively assuming a 60 kW maximum sustainable loss, which is the limit of the SRF power supply, NCRP 144 Figure 3.5 shows Bremsstrahlung dose rates of 4×10^7 rad/h in the forward direction at 1 meter with no shielding, and 5×10^5 rad/h in the transverse direction. Since this energy Bremsstrahlung also produces giant resonance neutrons, the 25 MeV beam generates the highest neutron yield.

Swanson[23] (see figure that follows) has illustrated the broad features of the radiation field due to the unshielded initial interactions of electrons. The figure shows the radiation dose is heavily dominated by the Bremsstrahlung contribution. However, this figure is useful for making crude estimates of the resultant neutron radiation field. For a 60 kW continuous loss of 25 MeV electron beam, neutron dose equivalents range between 6×10^3 and 1×10^5 rem/h at 1 meter, which are several orders of magnitude less than the dose equivalent from Bremsstrahlung. At C-AD, a value of 430 rem/kW-h at 1 meter was used in the RSC Chair's analysis for electron energy of 25 MeV (i.e., 3×10^4 rem/h at 60 kW).[24]

---

[23] W. P. Swanson, Radiological Safety Aspects Of The Operation Of Electron Linear Accelerators, Technical Report No. 188, International Atomic Energy Agency (IAEA), Vienna, 1979. Adapted in Radiation Physics For Personnel And Environmental Protection, Fermilab Report Tm-1834, Revision 7, April 2004, J. Donald Cossairt, Fermi National Accelerator Laboratory.
[24] D. Beavis, Simple Estimate of ERL Radiation, August 1, 2006.

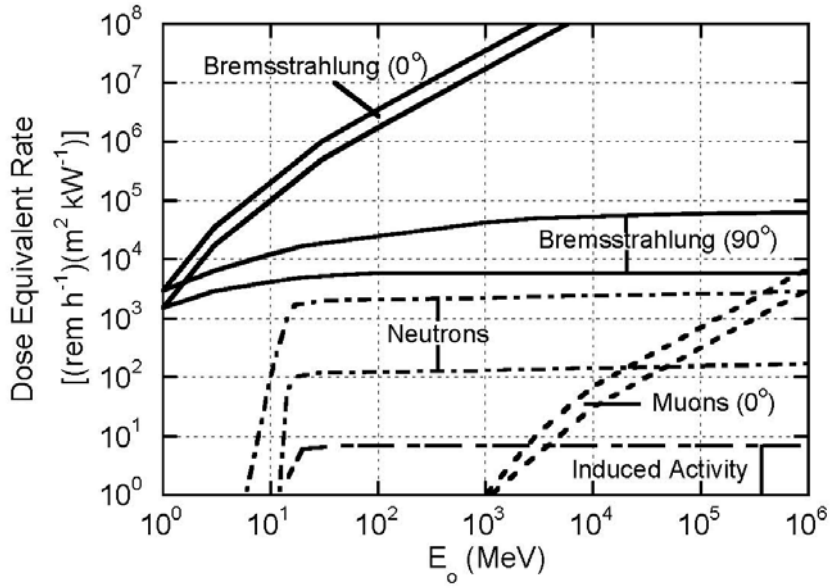

Fig. 3.10 Dose-equivalent rates per unit primary beam power at one meter produced by various types of "secondary" radiations from a high-Z target as a function of primary beam energy, if no shielding were present (qualitative). The width of the bands suggests the degree of variation found, depending on such factors as target material and thickness. The angles at which the various processes are most important are indicated. [Adapted from (Sw79a).]

The unshielded dose rate values represent a starting point for appropriately shielding the facility in order to adhere to the C-AD Shielding Policy. Section 4.1.2, which is the next section, contains detailed results of calculations that were performed for the shielded facility.

4.1.2. Maximum Credible Dose Rates on Outside Surface of 48-Inch Concrete Shield

Beam loss in the ring is limited for machine protection by beam current transformers used in a differential mode, and is anticipated being low because high loss would cause major equipment damage, quickly terminating operation of the accelerator. On the other hand, for this analysis the machine protection system is not credited in reducing dose from a beam loss event.

Deleted: 2

The maximum sustained beam loss is 1.5 MW for 3.5 MeV injection electrons and 60 kW in the 25 MeV ring. Credible routine losses are expected to be 1 W at beam injection and 50 W for the 25 MeV beam. Additional heavy concrete or iron shielding for the electron ring in the cave is present to reduce the Bremsstrahlung dose rate in the forward direction. This added shielding reduces the 0-degree Bremsstrahlung dose rates by a factor of at least 0.005. Including this added shielding, the following estimates for gamma and neutron dose rates at the outside surface of the Prototype ERL cave shielding are shown in Table 4.1.2.a.[25,26] Details of the calculations are given in Appendix 1.

[25] D. Beavis, Simple Estimate of ERL Radiation, August 1, 2006
[26] D. Beavis, The Effectiveness of a Two-Foot Thick Inner Heavy Concrete Wall, December 11, 2006

Table 4.1.2.a Dose Outside of Prototype ERL Cave for 3.5 and 25 MeV Electrons

Condition	Instantaneous dose rate from maximum beam loss[a]	Dose rate from sustainable loss[b]	Dose from sustainable loss assuming interlock occurs[d]
3.5MeV@ 0 degrees, γ	110,000 mrad/h	0.073 mrad/h	0.0002 mrad
3.5MeV@ 90 degrees, γ	22,400 mrad/h	0.015 mrad/h	0.00004 mrad
25 MeV@ 0 degrees, γ	65,000 mrad/h[c]	4000 mrad/h[c]	10 mrad[c]
25 MeV @ 90 degrees, γ	13,000 mrad/h	800 mrad/h	2.0 mrad
25 MeV neutrons	120 mrem/h	6.0 mrem/h	0.015 mrem

Deleted: 88

Deleted: 18

Deleted: 0

[a] The maximum instantaneous beam loss is 1.5 MW at 3.5 MeV and 10 MW at 25 MeV, a loss which would terminate after a small fraction of a second.

Deleted: 2

[b] The sustainable loss is 1 W for 3.5 MeV and 60 kW for 25 MeV electrons is assumed.

[c] The forward direction gamma dose rates have been reduced by a factor of 0.005 by the addition of 2-feet of heavy concrete in the electron ring.

[d] As with all C-AD interlocking area-dose-rate monitors (named 'Chipmunks'), a 9-second delay from sensing the trip point dose rate to stopping of beam is conservatively assumed in SAD analyses.

Routine surveys during commissioning will ensure that radiation area postings reflect the actual dose rates during operations.

The electron gun and the 5-cell accelerating cavity will generate x-rays from field emission of wall-surface electrons. They are assumed to generate x-ray dose rates similar to the RHIC RF cavities. A conservative dose rate of 2000 rad/h at 1 meter is assumed for the maximum sustainable loss during conditioning of the cavity and 80 rad/h at 1 meter is assumed for routine losses. Comparison of this source with the dose rates from the routine electron beam loss shows that the x-ray dose rates at the outside surface of the Prototype ERL cave shielding are insignificant.

The Monte Carlo Neutron Photon Transport Computer Code (MCNPX) was run to estimate the dose rates from skyshine in normally occupied areas during ERL operations. The results are summarized below for the assumed maximum sustainable loss of 60 kW, and for a more realistic but conservative loss of 50 W assuming that Chipmunks interlock the beam at a set point determined by the RSC. It is noted that Prototype ERL will be run only about 25% of a year. Using this occupancy with the expected sustainable loss of 50 W, the annual dose to an individual in the Prototype ERL control room will be 41 mrem.

Table 4.1.2.b Skyshine Dose Rate Estimates From 25 MeV Beam Loss[27]

Occupied Location	Maximum sustainable loss (60 kW of 25 MeV electron beam)	Conservative sustainable loss (50 W of 25 MeV electron beam)	Maximum dose with 60 kW loss assuming Chipmunk Trips Beam
ERL Control Room	98 mrem/h	0.082 mrem/h	0.25 mrem
Building 966	26 mrem/h	0.022 mrem/h	0.07 mrem
Building 940	4.0 mrem/h	0.0033 mrem/h	0.01 mrem

The Klystron room shielding was based on the operation of a similar Klystron at Los Alamos, which had a 1/8 inch lead "garage" over it. The Prototype ERL Klystron operates at an upper voltage of ~92 kV. For the ~200 kV upper energy limit of the x-rays, the 1/8 inch of lead was computed[28] to be equivalent to 1-inch of steel at operating voltage and ~2.1 inches of steel at 150 kV. Based on this calculation and radiation measurements made at the manufacturer's facility, the Klystron room is a steel box with a wall thickness of 2 inches of steel. There are penetrations in the back wall for utilities and the wave guide. These penetrations are shadowed by steel and lead to prevent x-rays from directly shining out.

Dose estimates for the penetrations use a combination of simple source terms and estimates of the attenuation of the radiation as it propagates through the opening.[29] The estimates are intended to be order of magnitude estimates. Conservative assumptions are usually used so that the estimates represent upper limits for the potential dose rates. The low-intensity fault studies for the RF-gun, five-cell cavity, and transport of the low energy and high energy

[27] Email from K. Yip to R. Karol dated January 29, 2008, Skyshine
[28] MicroShield Version 7.02, Grove Software Incorporated
[29] D. Beavis, Dose Rate Estimates for ERL Penetrations, March 26, 2008.

electron beams will be used to verify the source terms and radiation transport through the shielding and penetrations.

There are approximately 20 penetrations through the Prototype ERL external shielding. Two of the major penetrations are used for personnel and equipment access. Several of the penetrations are buss blocks containing several dozen small penetrations for access of utilities. Other penetrations are intended for electrical cables, cryogens, gas exhaust, laser beam, etc.

The ERL enclosure has side walls composed of between four and eight feet of light concrete. The thin sections of wall are shadowed from the potential sources with inner shield walls located appropriately. The entire facility has a single layer of light concrete roof beams four feet thick, except for a transition region where the roof is two layers of roof beams. This transition region is where the 13 foot ceiling height in the center is reduced to 9 feet at both ends.

The radiation sources are predominately x-rays and gamma rays. The 25 MeV electron beam is capable of generating neutrons. Only in conditions where substantial high-Z shielding materials have been used or where it takes many bounces for radiation to get through a penetration is it possible for the neutron dose rates to dominate the x-ray dose rates.

The shielding was evaluated for two types of exposures, normal and fault conditions. Dose rates during fault conditions are typically many orders of magnitude larger than that of normal operating conditions. The areas around the penetrations are typically not occupied and they are posted for localized elevated dose rates. The main focus of the penetration analysis is

the issue of dose to personnel during a faulted beam condition, as opposed to dose from normal operations.

During operations, all areas near the Prototype ERL shielding are posted at least as a Radiation Area. Large dose rates caused by fault conditions are detected and controlled by area radiation monitors (Chipmunks) distributed around the area as defined by the RSC. These devices are coupled with the interlock system and terminate the radiation in 1 to 9 seconds depending on the level of radiation at the detector. A delay of 9 seconds was assumed for the estimate of dose from fault conditions.

The four sources of radiation in the area are the injector, beam losses of the 3.5 MeV electron beam, the five-cell cavity, and beam losses of the 25 MeV electron beam. The source terms used are conservative. As already noted, the fault studies at low intensity will provide a check on the source terms and the effectiveness of the installed shielding.

The injector and the five-cell cavity can generate copious x-rays. No modeling has been conducted for the injector and the five-cell cavity in terms of the x-ray generation, but experience from other similar systems at C-AD can be used for guidance. The conditioning of these RF cavities will cause the largest x-ray generation. The superconducting five-cell cavity is expected to be able to absorb 100 to 1000 watts from field emission electrons crashing into the walls of the cavity before boiling too much helium and becoming normal. The voltage difference that field emission electrons cross is typically less than the gradient of a single cavity, 5 MV. Only a few electrons accelerate across several cavities. It is assumed that all the electrons are at 3.5 MeV with a maximum conditioning loss of 250 W. It is expected that the routine loss is less than 10

W for the five cell cavities. It was assumed that the injector has this same characteristic. Previous methods[30] are used to estimate the 90-degree radiation, using thick target formulas. The calculated unshielded dose rates for conditioning are 2000 rem/h at 1 meter, and for normal operations, 80 rem/h at 1 meter. Thus, the shielding used to protect against normal electron beam losses is adequate to protect against this source too.

The dose from a 25 MeV electron beam loss in the near zero degree direction has been estimated to be 10,800 rad/hr at 3 meters with 2 feet of heavy concrete between the source and the point of interest with a 60 kW loss[31]. This value was used in the calculations for locations where an inner shield wall acts as a shadow for the 25 MeV beam losses in the ring.

The maximum sustainable beam loss that the 5 cell cavity can support is 60 kW, which is limited by the RF power supply. According to the machine designers, the realistic maximum local loss that can occur is between 10 and 100 W before the machine is damaged and shuts down. The ERL has machine protection devices to limit losses in order to avoid equipment damage. Thus, the 60 kW loss assumed for shielding calculations (Appendix 1) is considered conservative. Routine losses are expected to be less than 10 W.

The 3.5 MeV beam has a power limit of 1.5 MW. This power can be deposited in the water cooled beam dump, which has local shielding. Again it is not expected that the machine can survive a large beam loss at any location, except at the beam dump. The beam dump is shielded sufficiently and was not considered for the penetration evaluations.

Deleted: 2

[30] D. Beavis, "Simple Estimates of ERL Radiation", August 9, 2008.
[31] D. Beavis, "The Effectiveness of a Two-Foot Thick Inner Concrete Wall", December 11, 2006, Figure 1.

An arbitrary 1 kW of a 3.5 MeV electron beam was assumed for the penetration analysis. A routine loss of 10 W or less is expected. Any routine loss higher than this, as observed during daily radiation surveys, will be reviewed by the RSC for the possible addition of local shielding.

The following table (Table 4.1.2.c) summarizes the calculations in Appendix 1 for each penetration for gamma rays and neutrons. The maximum neutrons can come from a different source location than the gamma rays. In all cases the maximum gamma dose rates are from the 25 MeV electron beam losses.

Table 4.1.2.c Estimated Maximum Dose Rates and Fault Dose to Worker Near Penetrations

Penetration	Maximum Gamma Dose Rate (rem/h)	Maximum Neutron Dose Rate (rem/h)	Maximum Dose with Interlock (mrem)[8]
Laser port	3.1	0.025	7.8
1 MW Waveguide	63	0.6	158
Cryo Ports (5)	12.6 [1]	3 [1]	39
North Gate	0.39	2.7	7.7
North Labyrinth Buss Block	6 [2]	0.15	15.4
South Gate	73.5[3]	0.24	184
Port in South Labyrinth (2)	90 [4]	0.9	227
West Trench	9	0.15	22.9
East Trench	3	2.4	13.5
South labyrinth buss block	0.15	0.45	1.5
ODH Vent	15 [5]	6 [5]	52.5
Lifting Fixture holes (4)	2.1 [6]	0.012 [6]	5.3
50 kW waveguide	42 [7]	1.5 [7]	109

[1] Assumes that steel has been used to reduce the gamma rays by a factor of 10.
[2] This is directly outside the buss block. This may be in a fenced area.
[3] A shield block in the ring center would substantially reduce this dose rate, if desired.
[4] At port exit which may be in a fenced area. Port may be packed in the future. This value is for the port with the highest dose rate of the two ports.
[5] This is on the roof and is not allowed to have personnel access during operations.
[6] Evaluated at the edge of the shielding and not on the roof.
[7] The penetrations for the cables ports, water pipes and the 50 kW waveguide are computed in a separate note[32]. The dose rates presented here are at a height of 12 feet above the floor.
[8] Barriers are used to prevent access to penetrations greater than 20 mrem fault dose. Shielding will be added and barriers removed based on fault studies in order to reduce the fault dose below 20 mrem.

All the dose rates in the Table 4.1.2.c are sufficiently low such that with appropriately placed Chipmunk monitors to terminate the beam on large beam losses, the exposure to personnel is less than 10 mrem from a fault. Where fault dose rate exceeds 50 rem/h at a penetration opening, dual failsafe Chipmunks must be used. However, several of the larger dose rates can be further reduced and fault studies will allow evaluation of the need for added shielding by the RSC.

[32] D. Beavis, "Estimate of the Radiation Exiting Penetrations for the ERL 50 kW Waveguide, Cable Buss Block, and Water Pipes", Dec. 6, 2006.

Deleted: 2.5
Deleted: 0.024
Deleted: 6.3
Deleted: 50
Deleted: 0.48
Deleted: 130
Deleted: 10
Deleted: 2.4
Deleted: 31
Deleted: 1
Deleted: 2.2
Deleted: 6.3
Deleted: 4.8
Deleted: 0.12
Deleted: 12
Deleted: 59
Deleted: 0.19
Deleted: 150
Deleted: 72
Deleted: 0.72
Deleted: 180
Deleted: 7.2
Deleted: 0.12
Deleted: 18
Deleted: 2.4
Deleted: 1.9
Deleted: 11
Deleted: 0.12
Deleted: 0.36
Deleted: 1.2
Deleted: 12
Deleted: 4.8
Deleted: 4.2
Deleted: 1.7
Deleted: 0.010
Deleted: 4.3
Deleted: 34
Deleted: 1.2
Deleted: 88
Deleted: 1

4.1.3. Maximum Credible Ozone Concentrations in the Prototype ERL Cave

Toxic gasses produced by ionizing radiation shows that ozone is among the most toxic and could be produced in quantities that cause the room to exceed the ACGIH Threshold Limit Value (TLV) level of 0.1 ppm. The TLV is the concentration that most workers could be safely exposed to 8 hours per day, 5 days a week. The highest radiation doses to air are where the highest local concentration will be located. There are no locations in the Prototype ERL beam line where electrons traverse air so only the radiation energy imparted by the Bremsstrahlung is considered in this analysis. The calculation model for ozone production in Swanson was used.[33]

The highest power level in the Prototype ERL is the energy deposited in the beam dump. This is 1.5 MW of 3.5 MeV electrons. For an uncollimated Bremsstrahlung beam from an optimum high-Z target, the production rate of ozone, P in liters per minute, is:

Deleted: 2

$$P = 1.7 \times 10^{-4}\ L\Omega$$

Where: L = meters of air

Ω = kW of electron beam power, 1500 kW for the beam dump

Deleted: 2

The beam dump is to be enclosed in a 1-foot lead shield with at most ~6" of air that the Bremsstrahlung beam passes through before encountering shielding. The actual air passage is much less. Using these conservative assumptions yields an ozone production rate of 0.0375 L/m.

[33] W. P. Swanson, Toxic Gas Production at Electron Linear Accelerators, SLAC-PUB-2470, February 1980.

As indicated by Swanson, the mean life of ozone in air at room temperature, T, is 50 minutes for a radiation environment. Any natural ventilation of the cave is conservatively ignored. The calculated saturated concentration of ozone, C_{sat}, is:

$$C_{sat} = PT/V$$

The 6 inch air volume around the dump is 12,400 in^3 (200 L) since the dump is 60 inches long x 19 inches diameter. C_{sat} for that air-gap between the dump and lead shield is 9.4×10^3 ppm. Assuming exchange of the air in the gap occurs with cave air (V of 20,000 ft^3 or 570,000 L), then saturation concentration is reduced by a factor of 200/570000 or to a level of 3.3 ppm, well above the TLV limit.

Deleted: 7.5

Based upon this calculated result, the beam dump is to be enclosed in a tight structure maintained free of air by using an inert gas such as helium, or the air space between the dump and the lead shield will be ventilated outside the cave into B912 where the ozone will significantly dilute to safe levels. Ozone measurements will be made during ERL commissioning to determine the actual magnitude of the ozone problem and to optimize the solution.

The credible sustainable losses of the electron beam are 1 W for the 3.5 MeV electrons and 50 W for the 25 MeV electrons. The length of air until the uncollimated Bremsstrahlung beam reaches shielding is no greater than 4 meters. Assuming that the ozone produced by these losses are continuous and reach saturation in the ERL cave, the ozone concentration is 0.0003

ppm for the 3.5 MeV beam loss and 0.01 ppm for the 25 MeV beam loss. Thus there are no unsafe ozone hazards from routine electron beam losses.

4.2. Identification of Potentially Hazardous Conditions from Oxygen Deficiency

OSHA defines an oxygen deficient atmosphere in 29CFR1910.146 as atmospheres containing less than 19.5% oxygen by volume. Normal atmospheres contain ~21% oxygen. Clinically observed effects from oxygen deficient atmospheres do not begin until the concentration falls to ~17%. If a small number of workers are exposed to potential oxygen deficient atmospheres, it is cost effective to use conservative controls for protection. However, with large exposed populations it is necessary to better establish controls at an appropriate level. With too little control, the injury rate may be unacceptably high. With too much control, the ability to operate efficiently is diminished.

Controls address two types of exposures: one where a known oxygen deficiency exists, the other in which an oxygen deficiency does not exist but there is a potential for its occurrence. The latter type exposure in particular applies to Prototype ERL, although a known oxygen deficiency could exist, for example, in a confined space such as a trench in which sample results show <19.5% oxygen. Work planning would determine the controls needed to safely work in this space. Controls would include periodic atmospheric monitoring, self-contained breathing apparatus, ventilation and confined space permits. The premise for controlling a potential oxygen deficiency is that the risk to workers should be no greater than risks in a general industry setting.

If exposure to reduced oxygen from an accidental event is stopped early enough, effects are reversible or avoided altogether. If not, permanent central nervous system damage or death can result. Major effects hindering escape from the vicinity of an oxygen deficiency are disorientation and unconsciousness. For personnel actively working, unconsciousness occurs at ~13% oxygen. A person in the general area of a catastrophic release of an inert gas and not hurt by a pressure wave would be alerted to the escaping gas by the noise and, if a cryogenic gas, the cold and resulting vapor cloud. ODH training is used to alert personnel to leave the area. In this case, personnel are trained to know that they can out-walk the expanding inert-gas cloud and safely walk out the nearest ERL cave exit.

The controls for potential oxygen deficiency are focused on the workers in the general area of the potential release. The survival of individuals in the general area is highly probable because of the engineering and administrative controls, monitoring systems, and training.

For the highly unlikely scenario in which an individual is in contact or very near failed equipment at the time of failure, the affected individual would be exposed to several hazards. These would include the powerful mechanical forces that resulted in a release of gas or cryogenic liquid, a pressure vessel failure for example, and the oxygen deficiency condition. In those extreme conditions, a person would lose consciousness in seconds and probably not survive.

Training for workers includes the methods to become aware that a release of inert gas has occurred, escape methods and use of appropriate oxygen monitoring devices and escape packs.

In addition to training on use of oxygen monitors and escape packs, ODH information is given in the facility specific courses required of all employees and users.

The C-AD SAD has a detailed description of the graded approach used to determine the controls necessary for areas having a potential for oxygen deficiency. It is recognized that these simplified methods cannot directly and quantitatively address the effects of the inert gas concentration gradients during transient release of the gas. The approach is to use a prescribed, simplified analysis to determine how an individual can have reasonable assurance that they are protected from a gas release. It treats the problem in a global way, by assuming uniform instantaneous mixing of the gas in all available volume within the enclosure. For nitrogen, helium and lighter gases, used at ERL this is reasonable. As already noted, individuals near the location of any release have higher likelihoods of injury or death. Thus a combination of the BNL SBMS ODH methods coupled with engineering judgment, assumptions on worker training, evacuation procedures and monitoring equipment are utilized in determining the controls needed to ensure an acceptably safe workplace.

The BNL SBMS models are used to determine the ODH classification of a building. The SBMS is based on the Fermi ODH model. The Fermi Model is a prescribed method to determine the necessary level of hazard control for a building having the potential for oxygen deficiency. A graded approach is used to implement hazard controls as a function of the computed ODH fatality rate. The fatality rate is selected as the hazard index since death is the most important, non-reversible effect of exposure to oxygen deficiency. The average US industrial fatality rate at the time the method was developed (1984), $\sim 10^{-7}$/hr, was defined to be the fatality rate at which

protective measures, other than training and postings are required.[34] Today, that rate is about $2x10^{-8}$/hr.

Areas of ERL which have potential ODH hazards have been evaluated as described above. A low oxygen concentration set point/alarm is 18%. Alarm set points below 19.5% are acceptable because these alarms warn of accidents and not of planned, routine working conditions. ODH sensors and alarms will be located on the walls within the accelerator enclosure at eye level, and within the helium recovery building. These areas are small enough such that alarms are visible and audible from any location within the rooms. The results of the ODH analyses for the affected areas of ERL are summarized in Table 4.2.[35]

Table 4.2 Potential ODH Areas at ERL

Building	Free Volume	Bounding Cryogenic Leak Location	Spill Rate (SCFM)	ODH Exhaust Fan Capacity (SCFM)
ERL Cave in B912	20,000 ft^3	Failure of 1-inch copper LN2 transfer line	3275	13,750
ERL Helium Recovery Building	9500 ft^3	Rupture of Kinney vacuum pump helium discharge line	1150	4850

The Prototype ERL Cave volume assumed for ODH analyses conservatively excludes the labyrinth volumes and accounts for the equipment in the cave. The Prototype ERL helium recovery building volume also accounts for the equipment in the room. The results of the ODH calculations show that both the cave and the helium recovery building are ODH 0 areas.

[34] T. Miller and P. Mazur, Oxygen Deficiency Hazards Associated with Liquefied Gas Systems: Derivation of a program of Controls, Am. Ind. Hyg. Assoc. J. 45(5):293-298(1984).
[35] BNL LESHC Meeting Minutes 06-06, May 18, 2006, Energy Recovery Linac in Building 912R. Karol, ERL ODH Calculations, January 8, 2008.

4.3. Identification of Potentially Hazardous Conditions from Electrical Energy

Chapter 3 describes the numerous electrical devices, magnets, power supplies, vacuum system, Klystron, RF systems, beam instrumentation and controls that are employed at Prototype ERL.

The sheer number of electrical devices and their conductors installed at accelerator and experimental facilities justifies recognizing electrical hazards as a major personnel hazard which requires detailed hazard controls. C-AD adheres to BNL SBMS subject area on Electrical Safety supplemented by the C-A-OPM 1.5 procedure series, order to mitigate electrical hazards. The hazards are described as follows:

AC Distribution

1. The primary AC distribution is at 13.8 kV. The feeds are underground to substations located at various sites. Transformers convert the 13.8 kV to 480 volts AC for subsequent distribution. Because of the very high hazard, the substations are fenced in with controlled access by the BNL Plant Engineering personnel. C-AD personnel do not normally have access to these areas.
2. Secondary distribution is 480 V, 3 phase, 60 Hertz, high resistance ground delta with remote sub-station ground-fault monitoring system. This is used directly in many pieces of equipment, motors, pumps, power supplies, etc. It is further transformed to 220/120 V, 3 phase for lights, utility outlets and all general needs. The hazard at 480 V is not only from a 480 V shock, but also from the possible arc formation at a short circuit. The short circuit currents are extremely high and an arc can create a shock wave and spray molten

copper and other materials. The procedures followed on 480 V circuits include training, LOTO or key lockout, circuit voltage testing, and the use of proper personnel protective equipment, the use of which is based on arc flash calculation.

High Voltage, Direct Current

1. Low Current - In many pieces of electronic equipment there are high voltage, low current, power supplies. While the current in some cases may present a direct shock hazard, in others it will be too low to cause a direct injury, but may lead to indirect injuries, such as, falls, bumps or other physical or electrical mishaps. ERL components are prominently marked for a high voltage hazard and may also be interlocked if a direct shock hazard exists. ERL equipment uses high voltage power supplies and each set-up is reviewed by the ASSRC before being energized.
2. High Current - In the range of 10-50 mA passing through the body significant physical harm may occur. The RF systems, as well as various pulsed magnets, kickers, and other devices, use potentially lethal power supplies. All such power supplies are properly marked; interlocks actuated on entry to the supply are hard wired to the power source; panel indicator lights show the power supply status; local-remote lockout switches are provided where more than one turn-on location is used. Shorting devices are provided, manual or automatic, especially on capacitor storage devices.

High Current, Low Voltage

Many devices use high currents, up to several thousand amperes, at relatively low voltages. In most cases the shock hazards are low but a short circuit on the lines, just as in the 480 V AC case, can lead to excessively high temperatures. Training, proper warnings, enclosing of conductors and interlock devices are used.

RF Voltages

RF voltages in the many kilovolt level are present in the accelerating system. Contact can result in shock and deep RF burns. The procedures as in the high voltage DC case are used.

4.4. Fire Hazards

The primary combustible loading at Prototype ERL consists of magnets, power and control cables, and beam diagnostic equipment. None of the materials is highly flammable, and with the possible exception of small amounts of control cable, all are expected to self-extinguish upon the de-energizing of electric power. Small amounts of flammable materials such as cleaning fluids may be routinely used in support of Prototype ERL maintenance. These materials will be purchased and controlled in accord with BNL's Chemical Management System, and stored in accord with SBMS Subject Area requirements.

Due to a system for diversion of radioactive liquid effluent to a hold-up pond, there are no environmental impacts due to release of contaminated water from the fire protection water

system. Water sprayed on potentially radioactive equipment may become slightly contaminated but would enter the sanitary system and be monitored before release. There are no significant amounts of combustible activated materials in the Prototype ERL and no significant radioactive particles would be present in smoke. Thus, there is no significant environmental hazard from a fire at the Prototype ERL.

To mitigate Prototype ERL fire hazards the systems are designed to industry codes and standards, there is fusing, limits exist on flammable gas volumes, there is fire detection, smoke detection alarms, sprinklers, control of combustible loading, ventilation systems, safety committee reviews, training for emergencies, control of ignition sources, and enhanced work planning.

4.5. Industrial Hazards

Standard industrial hazards such as lasers, vacuum and pressure, magnetic fields, cryogens, chemicals, and mechanical hazards are controlled by following the appropriate requirements in the BNL SBMS Subject Area.

4.6. Hazard Controls

The purpose of this section is to briefly summarize the various system features and administrative programs that help to control hazards or minimize risk of various hazards. It is noted that there are no credible offsite consequences from any Prototype ERL operations. Only workers or the environment are exposed to potential hazards.

4.6.1. Radiation Hazard Controls

The significant hazard at Prototype ERL is ionizing radiation, and operations are planned to be within DOE dose guidelines. The Department uses a graded system of controls such as shields, fences or barriers, locked gates, interlocks and procedures to match access restrictions with potential radiation hazards that satisfies both the BNL and DOE requirements.

Although the Laboratory site is a limited access site, service personnel from off-site or BNL non-radiation workers may work near ERL or may traverse the complex. The BNL policy is to administratively restrict the dose to 25 mrem per year to such personnel. The C-AD adheres to this policy by using shielding, postings, radiation monitoring devices that prevent radiation levels from exceeding set points, radiation work permits, work planning and RS LOTO.

Shielding for Prototype ERL is also designed to permit access by appropriately trained personnel to areas adjacent to the accelerator cave even with credible inadvertent beam loss.

There are restrictions on access for specific Prototype ERL facility areas. Access into the machine area is prevented by dual interlocks when the machine is operational. This includes the operation of the electron beams, the RF-Gun and 5-cell cavity. Personnel access to the roof is administratively prohibited during operations. Personnel are not allowed in the 1 MW Klystron power supply room during operations. A substantial area between the adjacent experimental

building and the Prototype ERL shielding on the west side is fenced and locked with personnel excluded during operations or with limited access.

4.6.1.1. Permanent Shielding and ALARA Dose

Shielding is used to reduce radiation levels in occupied areas to acceptable levels. The C-AD's shielding policy is given in Appendix 3, Shielding Policy. Potential access points to the Prototype ERL cave where personnel are prohibited during operations will be controlled by the Access Control System and the use of chicanes.

Shielding design analyses were performed for Prototype ERL, and ALARA was integrated into the overall facility design. Soon after beam is available, studies will be conducted at low power in order to verify the design and to optimize shielding, as needed, to help achieve an ALARA dose to personnel. Extensive radiation surveys of normal operations, as well as low-intensity simulated, credible beam faults, are conducted as required during commissioning, initial operations and for future, approved modifications. These surveys provide assurance and verification of the adequacy of the shielding and access controls. It is noted that the permanent shielding and access controls are configured to support the BNL Radiation Control Manual dose limit requirements, and are further enhanced to support the BNL Radiation Control Manual ALARA considerations.

The shield was planned with ALARA in mind such that, during normal operations, the dose rate on accessible outside surfaces of the shield is planned to be less than 0.25 mrem/h in

areas under access control. Areas under access control are all designated Controlled Areas or radiological areas as defined in the BNL Radiation Control Manual. The design of 0.25 mrem/hr is a guideline based on the actual ALARA design objective of less than 500 mrem per year. That is, assuming 100% occupancy at the shield face, a 2000-hour per year residence time yields an acceptable ALARA design objective of 500 mrem. The 500 mrem per year ALARA design objective is one half the design objective stated in 10CFR835 § 835.1002 (b).

Since there are many ways to control access and residence time by area designation, training, signage and work planning and since there is a decrease of dose rate with distance from the shield face, significantly higher shield face dose rates are acceptable. Therefore, shields are evaluated in terms of the guideline of 0.25 mrem/h, and instances where higher values may be acceptable have barriers and postings to indicate where area designations play a major role in minimizing radiation exposures.

The permanent bulk shielding materials used at Prototype ERL are primarily materials used at all existing accelerator facilities. For example, concrete and iron provide protection for personnel outside the accelerator cave and Klystron room. In addition to the materials mentioned above, paraffin, borated paraffin, polyethylene, borated polyethylene and Pb may be used for local shielding and in special circumstances, along with appropriate fire safety and industrial hygiene controls. Shielding configuration is closely controlled and may not be changed without review and approval of the C-AD RSC.

4.6.1.2. Radiation Detection and Radiation Interlocks

At locations external and/or adjacent to the Prototype ERL cave where unlikely but possible beam loss may occur, the use of hard-wired, fail-safe interlocking radiation monitors are used. This technique is standard practice at DOE accelerator facilities to maintain radiological-area classification compliance by providing a robust and rapid beam inhibit if any monitor exceeds a preset interlock limit. These radiation monitors are part of the QA level A1 safety-significant access-control-system for personnel protection.

Interlocking radiation monitors at C-AD are calibrated annually. These radiation monitors have been dubbed Chipmunks. They are tissue-equivalent ionization chambers that measure dose equivalent rate, in mrem per hour, from pulsed, mixed-field neutron and gamma radiation. In the ionization chamber, total ionization from a single radiation interaction event is collected. From this ionization, the Chipmunk circuitry produces one pulse for every pico-Coulomb of charge. If the circuit is overdriven, then the circuit produces a continuous train of pulses. This feature prevents the Chipmunk from jamming at very high dose rates. The range of the Chipmunk is about 1 mrem/h to 100,000 mrem/h. Chipmunks that are used as area-radiation monitors for personnel protection are located in accessible areas of the Prototype ERL facility as determined by the C-AD RSC. Chipmunks interlock the electron beam should radiation levels exceed limits defined by the C-AD RSC. The operation of Chipmunks with interlocking capability is fail-safe. Loss of power results in beam off for interlocked Chipmunks, and/or an alarm in the Prototype ERL Control Room adjacent to Building 912, a control room that is continually manned during routine operations. Additionally, the Chipmunk uses a built-in keep-

alive radiation source to monitor for failures. Such a failure will trigger an alarm in the Prototype ERL Control Room and/or an interlock when appropriate.

The interlock system is hard-wired and uses relay logic or PLCs to activate or deactivate a device or a magnet power supply to prevent beam from entering the fault area when a fault condition is detected. These systems are monitored by an independent computer, and the fault condition is logged.

Fixed-location area-radiation monitors such as Chipmunks also provide real-time dose information in B912. This dose rate data is logged every few minutes and stored on computers. General locations are initially selected for the real-time monitors; exact locations are determined based on beam-loss tests conducted during the Prototype ERL commissioning phase and on subsequent radiation surveys during operation. Final area radiation monitoring instrument locations are approved by the C-AD RSC.

Additional area monitors may be used to assess the long-term integrated dose in areas accessible to the public and other individuals not wearing personnel dosimeters. TLDs identical to those worn by radiation workers are mounted in locations in accordance with the BNL Radiological Controls Division procedures for this purpose. The dose recorded by these TLDs is indicative of the exposure of a person spending full time at that location. Neutron dosimeters, if their use is indicated for this purpose, will be attached to phantoms to simulate use by personnel.

4.6.1.3. Control of Radioactive Materials and Sources

When the electron beam is turned off, the remaining radiation hazard comes from activated material and sources. Activation of materials is expected to be either non-existent or insignificant at Prototype ERL. Activated material may be a direct radiation hazard, and may have removable contamination. All known or potentially activated items will be treated as radioactive material and handled in accordance with BNL Radiation Control Manual requirements. Unlabeled radioactive material that is accessible to personnel is placed in appropriately posted radiological area. Unless permitted by procedure, suspect radioactive material is surveyed by a qualified Radiological Control Technician (RCT) before release and then controlled in accordance with the survey results. Known radioactive materials are appropriately labeled before removal from an area that is posted and controlled. Radioactive items with removable contamination on accessible surfaces are packaged before removal from posted radiological areas. Workers whose job assignment involves working with radioactive materials receive documented training as radiological workers. Sealed radioactive sources below BNL accountable-activity-limits are treated as radioactive material. Accountable sealed radioactive sources are controlled, labeled and handled in accordance with the BNL SBMS Subject Area and the C-AD OPM. Accountable sealed radioactive sources that are in regular use are inventoried and leak-tested every six months.

4.6.1.4. Portable Radiation Monitors

Portable radiation detection instruments are used by RCTs and, potentially, other trained and approved C-AD personnel, to measure the radiation fields in occupied areas during commissioning and periodically during normal operations. The measurements made by RCTs will be used to establish and confirm area radiological postings. Instruments used for this purpose will be appropriate for the type and energy of the expected radiation, and will be calibrated in accordance with BNL requirements.

Experience at the C-AD accelerators and experiments have shown that contamination is not a significant problem at our facilities. Prototype ERL contamination is not expected, however, routine contamination surveys are conducted to verify that contamination is not a problem. Instruments used to frisk personnel who are exiting posted areas that might contain removable contamination are used as appropriate.

4.6.1.5. Personnel Dosimetry

All radiation workers wear appropriate TLDs and self-reading dosimeters as required by the BNL Radiation Control Manual while working in areas posted for radiation hazards. Dosimeters are exchanged on a regular basis and processed by a DOELAP-accredited laboratory. Records of the doses recorded by these dosimeters are maintained, and these records are available to the monitored individuals.

4.6.1.6. Access Controls Systems

The radiation security system design for access controls at ERL is classified as QA level A1 according to the C-AD QA plan, but the Department allows certain components to have a lower classification because failure is to a safe state or critical parts are redundant. The Access Controls Group installs industrial grade components only. This Group labels parts that pass incoming tests as A1 or A2 and places labeled parts in controlled storage areas. The Group maintains documentation for these acceptance tests.

The basic design principles of the access control system are:

- Either the beam is disabled or the related security area is secured
- Only wires, switches, relays, PLCs and active fail-safe devices, such as chipmunks, are used in the critical circuits of the system
- The de-energized state of the relay is the interlock status; that is, the system is fail-safe
- Areas where radiation levels can be greater than 50 rem/h require redundancy in disabling the beam and in securing the radiation area
- If a beam fails to be disabled as required by the state of its related security area, the system has backup or reach-back

Very High Radiation Areas are those areas that enclose primary beam. Very High Radiation Area hardware requirements comply with the BNL Radiation Control Manual. The C-AD RSC requires:

- Locked gates with two independent interlock systems
- Fail safe and redundant radiation monitors or other sensing devices
- Indicators of status at the facility in the Prototype ERL control room
- Warning of status change
- Emergency stop devices within potential Very High Radiation Areas

The C-AD RSC reviews interlock systems for compliance with requirements in the BNL Radiation Control Manual, SBMS requirements and C-AD OPM procedures. A Representative of the BNL Radiological Controls Division is a member of the C-AD RSC. The C-AD RSC defines the design objectives of the security system and approves the logic diagrams for relay-based circuits and state tables for PLC-based circuits. Cognizant engineers sign-off on wiring diagrams and the C-AD Chief Electrical Engineer approves each diagram. The C-AD Access Controls Group maintains design documentation.

The Access Controls Group conducts a complete functional check of all security system components at an interval required by the BNL Radiological Control Manual. In the checkout, the Access Controls Group checks the status of each door-switch on a gate, and each crash switch in the circuit. They check the interlocks and the off conditions for all security-related power-supplies to magnets and magnets that may act as beam switches. They check every component in a security circuit. As they test, they fill-out, initial and date the security system test-sheets obtained from the C-AD OPM. Test records are maintained as required by the C-AD OPM.

4.6.2. Control and Use of Hazardous Materials

The BNL Subject Area on Working with Chemicals is designed to ensure that workers are informed about the chemical hazards in their workplace. The Subject Area is maintained to comply with OSHA and EPA regulations concerning hazardous chemical communications. The BNL Subject Area on Working with Chemicals includes provisions for policy, training, monitoring exposure limits, handling, storing, and labeling and equipment design, as they apply to hazardous materials. Inclusive in the hazardous material protection program will be: procurement, usage, storing, inventory, access to the hazardous materials, use of appropriate Personal Protective Equipment (PPE), as well as housekeeping and chemical hygiene inspections of C-AD facilities. All BNL general employees receive appropriate general Hazard Communication training. Standards for general hazardous materials communication are specified by the BNL SBMS. Training to these standards is provided, and the training program records are maintained on the Brookhaven Training Management System (BTMS). C-AD staff working in ERL areas with a potential for exposure to hazardous chemicals receive appropriate job-specific training at the time of initial assignment and whenever a new hazard is introduced into the work area. A comprehensive listing of all Materials Safety Data Sheets for the chemicals used at the BNL site is available on the BNL web;[36] a goal is to have all chemicals accounted for in the BNL Chemical Management System (CMS). The system of work controls, which is part of the BNL ISMS, requires enhanced work planning for work with certain hazardous materials. The enhanced work planning ensures that adequate hazard controls and completion of required training are in place before work with hazardous materials begins.

[36] http://intranet.bnl.gov/esh/cms/

The use of flammable liquids is minimal. Light industrial chemicals may be in use such as acetone, ethyl alcohol that is used as general cleaning solvent, glass cleaner, PVC cement that is used for insulation work, and spray paint. Any use of flammable liquids follows BNL SBMS requirements.

4.6.3. Electrical Safety

The requirements for electrical safety are given in detail in the BNL SBMS and the C-AD OPM. Electrical bus work is covered to reduce/prevent electrical hazards in the power supply areas. In the Prototype ERL cave, exposed conductors will not be present and magnet buss is covered. In Controlled Access mode, even though the magnets will not be powered, the power supplies will not be locked out. Workers are trained to assume that magnets are powered in all cases and to treat them accordingly. In cases where workers are required to work on or near a specific magnet during Controlled Access or Restricted Access, the magnet power supply will be locked out and tagged out by the worker.

In some cases, it will be necessary to work near magnetic elements while powered. Appropriate control over access during this mode is maintained by the Prototype ERL Operations Supervisor. Work planning, Working on or Near Energized Conductor Permits and training requirements for entrants under these circumstances address concerns for inadvertent contact with powered conductors and exposure to magnetic fields.

4.6.4. Lockout/Tagout Program

Lockout/tagout procedures are specified in the C-AD OPM. All workers will be required to train in lockout/tagout procedures at a level consistent with their position. Where electrical hazards could be present to C-AD personnel working in an area, lockout/tagout procedures are implemented only by trained and LOTO authorized personnel.

Breaker/disconnect operations as part of the LOTO follows the electrical PPE requirements of the BNL SBMS subject area, Electrical Safety, which is equal to or more restrictive than NFPA 70E in order to prevent injury from arc flash accidents.

4.6.5. Safety Reviews and Committees

Standing safety committees are utilized throughout design, construction, commissioning and operation to focus expertise on safety, environmental protection, pollution prevention and to help maintain configuration control. See Chapter 3 for details of each committee's authority and responsibility.

4.6.6. Training

Worker training and qualification is an important part of the overall ESH plan for he C-AD. Training and qualification of workers is described in the Operations Procedures Manual

and the required training for individuals is defined in the BTMS. All staff personnel and experimenters require an appropriate level of training to ensure their familiarity with possible hazards and emergency conditions.

Workers are trained in radiation and conventional safety procedures at a level consistent with their positions. The number and type of training sessions/modules is assigned using a graded approach commensurate with the staff members' responsibilities, work areas, level of access, etc. An up-to-date record of worker training is kept in the BTMS database. Radiation worker access will only be allowed if adequate training is documented, except in cases of emergency. Training procedures and course documentation will be reviewed and updated periodically.

4.6.7. Personal Protective Equipment

Special clothing is used to protect workers who are exposed to the various electrical hazards and hazardous materials, including chemicals and radiation. The clothing for a particular application is selected considering the expected hazards; a variety of types of clothing is needed to meet all hazards. There are no predicted hazards that are unique to C-AD facilities; experience and compliance with DOE 10CFR851 ensure the adequacy of protective clothing in a particular application.

Respiratory protection is provided for workers who might otherwise be exposed to unacceptable levels of airborne hazardous materials, including chemicals, oxygen deficient atmospheres and radioactive materials. Respiratory protection is selected, used and maintained per OSHA 29CFR1910.134 and BNL Respiratory Protection Procedures.

4.6.8. Significant Environmental Aspects and Impacts

In support of BNL's broad mission of providing excellent science and advanced technology in a safe, environmentally responsible manner, the C-AD is committed to excellence in environmental responsibility and safety in all C-AD activities, including Prototype ERL operations and maintenance.

To provide excellent science and advanced technology in a safe and environmentally responsible manner the C-AD has, over the past 20 years, continuously reviewed the aspects of its operations in an effort to identify and accomplish waste minimization and pollution prevention opportunities. This process began in 1988 with the development of formal environmental design guides and a design review process. More recently, this effort has resulted in a further formalization of its processes under the guidelines of ISO 14001, the BNL ISO 14001 "Plus" Environmental Management System Manual, and SBMS subject areas governing ISO 14001 implementation. The BNL EMS program emphasizes compliance, pollution prevention and community outreach. Based on the aspect identification and analysis process in

the Subject Area, Identification of Significant Environmental Aspects and Impacts, the following aspects are examples of significant aspects at the Prototype ERL:

- Regulated industrial waste
- Hazardous waste
- Radioactive waste
- Atmospheric discharge
- Liquid effluents (not expected to be radioactive)
- Storage/use of chemicals or radioactive material
- Soil activation (not expected to be significant)

The environmental policy as set forth by BNL in the Environmental, Safety, Security and Health Policy is the foundation on which the C-AD manages significant environmental aspects and impacts. The formal management program is called the C-AD Environmental Management System. The Environmental Management System details may be found in the C-AD OPM.[37]

The process evaluations are documented in C-AD OPM Chapter 14. Waste streams are reviewed by the C-AD Environmental Compliance Representative (ECR) and a process evaluation denoting all material inputs and outputs for the each process of Prototype ERL is on file for existing processes. While waste streams at Prototype ERL will be the same as for other accelerators in the C-AD complex, although in much less quantity, a new process evaluation is performed for each new, significant process at Prototype ERL before use.

[37] http://www.rhichome.bnl.gov/AGS/Accel/SND/OPM/Ch01/01-10-02.PDF Environmental Management Program Description Collider-Accelerator Department and Superconducting Magnet Division

4.6.9. Hazard Reduction Associated with Waste Generation and Handling

Hazards associated with handling, packaging, treating and disposing of wastes generated during operation and modification of the facility are reduced when the generation of these wastes is minimized via pollution prevention (P2) techniques. The BNL approach to P2 associated with the operation and modification of accelerators and experiments is to address it during the design and construction phase. The objective is to minimize or eliminate the anticipated costs associated with hazardous and mixed waste generation as well as the treatment and disposal of wastes and the consumption of resources in all ERL life cycle phases: construction, operation, closure and decommissioning. Dollars spent during the design phases will provide for significantly reduced total costs over the life of the facility thus making more funds available for science. The following are the main objectives of the BNL P2 program:

- Minimize the amount of hazardous, radioactive and mixed wastes that are generated
- Minimize the cost of waste management
- Comply with federal, state and local laws, executive orders and DOE orders

The C-AD has implemented a P2 program as part of its commitment to comply with the Environmental Management System and ISO 14001. C-AD facilities have been registered to the ISO standard by a third party registrar since CY 2000. Modifications to C-AD operations have helped minimize hazards and costs associated with the generation of waste streams.

4.6.10. Fire Detection, Egress, Suppression and Response

The basis of design for fire detection, egress, suppression and response has been determined by coordination with the BNL Fire Protection Engineer (FPE) and an outside consulting group. FHAs are on the C-AD website. C-AD facilities comply with DOE fire protection guidelines as well as NFPA standards, or else have approved exemptions from the local Authority Having Jurisdiction (AHJ), which is the BNL Fire Safety Committee. The system is integrated with the site-wide system and is comprised of an automatic fire detection and suppression system that includes automatic fire suppression and rapid response capability coverage by the BNL Fire Department. Sprinklers are not provided at the Building 912 ceiling or roof levels, but rather at intermediate levels and at or within enclosures, as required. Because of the low flammability of the magnets, power cables, control cables and beam diagnostic equipment, they do not have automatic fire suppression systems, except for certain areas where significant risk of programmatic disruption exists. Manual and automatic fire detection and alarm initiation devices are installed throughout the facility. Where needed, smoke and/or heat detection devices are supplemented with pressure sensitive sensors, flammable gas detectors or other advanced detection devices such as high sensitivity smoke detection (HSSD). The appropriate portable fire extinguishers are provided for manual fire fighting efforts by trained staff. Fire alarms are alarmed at the BNL Fire Department, Building 599, and at BNL Police Headquarters, Building 50, thus providing continuous coverage for rapid fire response. This will put additional professional fire fighting resources into action within a short period. Roadways around the facility help protect it from surrounding wildfires. The buildings' roofs are non-combustible metal and do not ignite from burning ash from brush fires.

The means of egress for occupants is in accordance with NFPA 101. Enclosure exhaust fans are located within the ERL ring enclosure and may be used for rapid smoke removal.

4.6.11. Routine Credible Failures

Routine credible challenges to controls associated with worker and experimenter protection and with environmental protection are further detailed in Appendix 6, Qualitative Risk Assessments.

Beam losses at Prototype ERL are sufficiently attenuated by the bulk shielding for expected routine operation. Adequate shielding is provided to meet requirements established by the Laboratory for permissible exposure to radiation workers, non-radiation trained workers and members of the public during normal machine operations. Present Prototype ERL shielding designs reduce all normal radiation levels to well below the DOE ALARA guidelines.

Exposure to nearby facilities from Prototype ERL operations is less than 25 mrem per year and only a small fraction of the permitted 5 mrem per year at the site boundary, which are the Laboratory guidelines for radiation exposure for nearby facilities and the site boundary, respectively. Radiation exposure to maintenance workers is reduced through the design of equipment to simplify maintenance and the selection of materials to minimize failures. Through such reviews, maintenance activities will be controlled to maintain radiation exposures well

within the DOE annual limits, limits that are 5 to 20 times higher than the Department's ALARA guidelines.

There are no significant quantities of dispersible gaseous or liquid radioactive materials produced at Prototype ERL. Operations personnel are trained to confine, clean up and report all water spills to management. Experience indicates that periodic leaks may occur onto the concrete floor. Spilled water is sampled before release to the appropriate waste stream or is allowed to safely evaporate in place. No offsite threats to the public are present.

4.7. Evaluation of Potential Impacts to Workers, Public and Environment

The routine radiation dose to workers is well below the regulatory limits. Worker exposure to other industrial hazards such as oxygen deficiency hazard is controlled such that potential injury is improbable. Due to the short range of the radiations, the risks to the public are zero.

Worker radiation doses, even including the maximum credible beam fault dose on a frequent basis, would not cause deterministic effects such as burns or tissue damage unless an individual were in the beam enclosure during operations. The ACS, which is categorized as Safety-Significant, assures that such irradiations are not credible.

Cooling water spills are unlikely due to adherence to ASME codes and consensus design standards. Due to the lack of chemicals and dispersible radioactivity, operation of the Prototype ERL facility is anticipated to have virtually no impact on the environment.

4.8. Selection of Control Measures that Reduce Risks to Acceptable Levels

Credited controls have been selected to favor reliance on passive over active design features and to favor engineered controls over administrative controls. Mitigation of risks associated with the Prototype ERL facility is largely achieved with passive design features. The configuration of the Prototype ERL facility meets the C-AD mission of producing an intense source of pulsed electrons while satisfying safety requirements, foremost of which is the attenuation of prompt and secondary radiation. The passive shielding built into the Klystron, ring enclosure, and certain Prototype ERL structures (e.g., beam stop) was designed to passively reduce penetrating radiation to levels that are ALARA and to allow unencumbered access by users and staff in areas routinely occupied by personnel.

Active credited engineered controls are employed as needed to protect workers and users from radiation exposure, ODH and the equipment from extensive fire damage. For example, the ACS provides beam trips in response to access violations into hazardous areas or detection of elevated radiation levels in certain potentially occupied areas. Another example of an active engineered control is the ring enclosure ventilation system that activates upon ODH alarms. An example of engineered equipment protection is the sprinkler system. Proper function of active controls is ensured by required surveillance/maintenance requirements specified in the ASE.

Certain credited administrative controls have also been identified. To a large extent, required administrative controls are addressed by ISM programs already well established and maintained at BNL (e.g., radiation protection, electrical safety, etc.). Administrative controls specific to Prototype ERL are addressed by ASE requirements to ensure their safety function is maintained.

4.9. Listing of All Credited Engineered and Administrative Controls

Table 4.9.a Summary of Credited Engineered Controls

	Credited Engineered Control	Applicable Events
1	Chipmunk-interlocked beam cutoff on abnormal radiation levels	Table A.6-4 Qualitative Risk Assessment – Radiation External to Enclosure
2	Access-controlled gates	Table A.6-4 Qualitative Risk Assessment – Radiation External to Enclosure
3	Ionizing radiation shielding	Table A.6-4 Qualitative Risk Assessment – Radiation External to Enclosure
4	Fire detection and suppression systems	Table A.6-11 Qualitative Risk Assessment – Fire
5	ODH monitoring system	Table A.6-12 Qualitative Risk Assessment – Oxygen Deficiency Hazards (ODH)
6	ASME rated pressure relief valves and burst disks, ASME compliant pressure vessels and piping or equivalent	Table A.6-7 Qualitative Risk Assessment – Conventional/Industrial Hazards
7	Remote sub-station ground-fault monitoring system	Table A.6-3 Qualitative Risk Assessment – Electric Shock/Arc Flash

Table 4.9.b Summary of Credited Administrative Controls

	Credited Administrative Control	Applicable Events
1	Review of radiation safety by C-AD RSC	Table A.6-4 Qualitative Risk Assessment – Radiation External to Enclosure
2	Configuration controlled ACS drawings and computer codes; annual ACS testing	Table A.6-4 Qualitative Risk Assessment – Radiation External to Enclosure
3	Configuration controlled shield drawings and calculation codes	Table A.6-4 Qualitative Risk Assessment – Radiation External to Enclosure
4	Annual fire detection and suppression system tests	Table A.6-11 Qualitative Risk Assessment – Fire
5	ODH monitor calibrations	Table A.6-12 Qualitative Risk Assessment – Oxygen Deficiency Hazards (ODH)
6	Relief valve and burst disk maintenance according to ASME standards	Table A.6-7 Qualitative Risk Assessment – Conventional/Industrial Hazards
7	Ground-fault alarm testing	Table A.6-3 Qualitative Risk Assessment – Electric Shock/Arc Flash

4.10. Description of the Maximum Credible Incident

The maximum credible incident is the incident in terms of property loss or injury to personnel that would result assuming all installed safety systems functioned as designed.

4.10.1. Maximum Credible Fire Incident

The objectives of presenting no threats to the public health and welfare or undue hazards to life from fire are satisfied. The designs of all C-AD facilities comply with the "Life Safety Code" (NFPA 101) and NYS Building Code and with the specific requirements of the

Occupational Safety and Health Standards (CFR29, Part 1910) applicable to exits and fire protection.

Welding gases and flammable/explosive gases are used and stored according to NFPA codes and standards applicable to experimental installations. Gases are stored in compressed gas cylinders that meet Department of Transportation (DOT) specifications. Large quantities of gas are forbidden in accelerator areas. There are no off-site threats to the public should a cylinder fail.

The facility is designed with an "improved risk" level of fire protection. The design requirements that were used are found in: 1) DOE Order 420.1, Facility Safety and 2) DOE Order 6430.1A, General Design Criteria. Prototype ERL is fitted with fire detectors and fire protection systems where appropriate. Fires are expected to be extinguished by these protective systems. Combustible loading in the Prototype ERL beam cave and other power supply areas consists of magnets, power cables, control boards, control cables and beam diagnostic equipment. None of the materials are highly flammable, and with the possible exception of small amounts of control cable and circuit boards, all are expected to self extinguish upon de-energizing of electric power. Induced radioactivity is deeply entrapped in concrete shielding and is not dispersible in a fire. There are no offsite threats to the public from a fire.

The personnel risks associated with the fire hazard are acceptable considering the type of building construction, the available exits, the fire detection systems, the fire alarm systems and

the relative fire-safety of the components and wiring. Emergency power and lighting is available in accordance with fire industry standards.

Travel distances to exits at Prototype ERL do not present a problem. In structures of low or ordinary hazard and in structures used for general or special industrial occupancy, NFPA 101 permits travel distances up to 120 m to the nearest exit if the following provisions are provided in full:

- Application is limited to one-story buildings only
- Interior finish is limited to Class A or B materials per NFPA definitions
- Emergency lighting is provided
- Automatic sprinklers are provided in accordance with NFPA 101 or exempted by the local AHJ
- Extinguishing system is supervised

Smoke and heat venting by engineered means or by building configuration are provided to ensure that personnel are not overtaken by spread of fire or smoke within 1.8 m of floor level before they have time to reach exits.

DOE has established limits of $1,000,000 for a Maximum Possible Loss and $250,000 for a Maximum Credible Loss mandating the installation of automatic suppression systems in locations where those limits are exceeded. Prototype ERL design meets these criteria. It is noted

that Prototype ERL is an experimental facility with a limited life time that allows judgment by the AHJ in determining the fire protection requirements.

Based on previous experiences at C-AD, the predominant sources of fire initiation have come either from electrical malfunctions or overheating in beam-line components such as magnets, which have caused a break down of the electrical insulation and subsequent arcing. The maximum credible fire incident was determined by the AHJ to be a fire in one magnet and damage to the two adjacent magnets. While the klystron's 100 kV transformers have 800 gallons of oil, it was felt that smoke detectors, interlocks to turn off power to the 100 kV transformers, fire sprinklers, low-flammability oil in the transformers, secondary containment and onsite fire responders would result in a less credible fire incident.

4.10.2. Maximum Credible Electrical Accident

The electrical systems and equipment in use at Prototype ERL is the same as that in use at C-AD facilities for many years. This statement does not minimize the inherent dangers; rather, it indicates that the technical personnel are experienced on accelerator circuits and devices. Additionally, they are qualified to work on these systems. Every engineer, technician and electrician that is expected to work on the facility equipment is adequately trained. The training includes an awareness of potential hazards and knowledge of appropriate safety procedures and emergency response plans. Training is documented and a list of authorized personnel is kept on a network electronic database (BTMS) and is available to supervisors.

The C-AD staff is familiar with the types of electrical hazards that relate to the accelerators and experimental areas. All required safety features are installed in and on the electrical equipment. The groups that maintain, repair, test and operate the equipment have the knowledge, tools and experience to perform safely. Work planning, which includes electrical safety procedures, working on or near energized conductor permits and, when required for high hazard work, job safety analyses is done to adhere to the safe practices mandated by OSHA and the BNL SBMS Subject Area on Electrical Safety. Periodic retraining improves the safety margin. Thus, the potential risk for a serious electrical shock is minimized to levels currently accepted throughout the industry.

4.10.3. Risk Assessment to Workers, the Public and the Environment

4.10.3.1. Radiation Risks

The routine radiation dose to workers is well below the DOE regulatory limits of 10CFR835. The range of doses received by C-AD radiation workers in FY2007, which was a typical recent year with the RHIC nuclear physics program, was from zero to ~60 mrem. Experience shows the average exposure of C-AD radiation workers is close to zero mrem during the RHIC nuclear physics program. The dose to an average C-AD radiation worker is only a small fraction of the regulatory limit, and the increase in fatal cancer risk after a lifetime of radiation work, 50 years, is insignificant, <<0.06%[38] compared to the naturally occurring fatal cancer rate of nearly 20%. Additionally, data shows the radiation burden for the C-AD worker

[38] This assumes a risk coefficient of $4x10^{-4}$ per rem for workers from NCRP Report No. 115, Risk Estimates for Radiation Protection (p. 112) and a 50-year career at 30 mrem per year.

has been declining for the past four decades. The risks to the public are an extremely small fraction of worker risk.

Worker doses at Prototype ERL, even including the maximum credible beam fault dose on a frequent basis, would not cause deterministic effects such as burns or tissue damage unless an individual were in the Prototype ERL accelerator cave during operations. The ACS, which is categorized as Safety-Significant, assures that such irradiations are not credible.

4.10.3.2. Environmental Risks from Radiation

There are no credible risks to the environment from groundwater contamination caused by Prototype ERL operations. Any spill of the insignificant levels of radioactive cooling water from a failed pipe or hose would have no environmental impact.

4.10.3.3. Fire Risks

Based on the extensive use of fire protection as determined by the BNL Fire Protection Engineer, the appropriate location of exits and the use of emergency ventilation exhaust systems, high or medium consequence levels are extremely unlikely. Thus, the fire risk is acceptable.

4.10.3.4. Electrical Risks

Based on the use of formal C-AD electrical safety procedures, working on or near energized conductor permits and, for high hazard work, job safety analyses, high or medium consequence levels are extremely unlikely. Thus, the risk is acceptable.

4.10.4. Professional Judgment Issues

The initial screening of Prototype ERL hazards was performed using qualitative engineering judgment. The C-AD engineering, operating and safety staff has many years of experience with BNL accelerators and experiments. This experience influenced the analyses of Appendix 2.

Experience has also influenced the choice of conservative maximum hourly routine and faulted beam power limits which have been used as the bases for the shielding and ALARA analyses. These judgment issues have always been and will continue to be verified by beam fault studies.

4.10.5. Methods Used in Evaluation of Radiological Hazards

Techniques employed in the evaluation of radiological hazards include the use of empirical formulae and graphs[39] and the Monte Carlo Program MCNPX[40]. MCNPX is probably the most widely used transport Monte Carlo code.

Past radiation dose rate measurements at C-AD accelerators have been made which show that dose equivalent and activation calculations are overestimates and should be regarded as upper limits.[41]

[39] NCRP Report No. 144, Radiation Protection for Particle Accelerator Facilities
[40] L. S. Waters, Ed., "MCNPX USER'S MANUAL," LANL Report TPO-E83-UG-X-0001, (1999). See also H.G. Hughes, R.E. Prael, R.C. Little, "MCNPX – The LAHET/MCNP Code Merger," X-Division Research Note, 4/22/97. The version number of the code used in this note is 2.1.5.
[41] A.J. Stevens, "Summary of Fault Studies at RHIC." BNL C-A Dept ES&F Note 156 (2000). http://server.c-ad.bnl.gov/esfd/epstechnote.html

Accelerator Safety Envelope

Title of Facility: Prototype Energy Recovery Linac (ERL)

Date of Initial ASE: ~~June~~December 30, 2008

Subsequent Revision Dates:

Version of the SAD that the ASE applies to: Prototype ERL SAD 6-30-08

Formatted: Font: Not Bold

Signature of Preparer:

_____

Signature of Collider-Accelerator Associate Chair for Superconducting Accelerator R&D:

_____

Signature of Collider-Accelerator Department Chair:

_____

Signature of Nuclear and Particle Physics Associate Laboratory Director:

_____

Signature of Deputy Director for Operations:

_____

ASE Contents:

Section 1. Introduction 2
Section 2: BNL Safety Envelope Limits 3
Section 3: Corresponding Prototype ERL Safety Envelope Parameters 4
Prototype ERL Beam Limits in Terms of Electron Energy and Beam Power 4
Control of Beam Loss 5
Access Controls 5
Fire Protection 5
Section 4: Engineered Safety Systems Requiring Calibration, Testing, Maintenance, and Inspection 6
Section 5: Operations ~~Envelop~~Envelope - Administrative Controls 6

Section 1. Introduction

~~The ASE Requirements herein define the conditions, safe boundaries, and the administrative controls necessary to ensure safe Prototype ERL operations and to reduce the potential risk to the public, workers and environment.~~
The bases for the ASE and the connections between the engineered and administrative bounding conditions are given in Chapter 5 of the Prototype ERL SAD 6-30-08.

The ASE is divided into 5 Sections. **Section 1** identifies the ASE change control method, the accountability policy for violations and the emergency action policy. Section 1 is followed by a hierarchy of boundaries that support safe operation. The top level limits are listed in **Section 2**. Section 2 defines the absolute limits for hazards not routinely encountered in an industrial operation such as ionizing radiation beams. **Section 3** limits are critical operating parameters that help ensure the Prototype ERL will not exceed the absolute limits in Section 2. **Section 4** of the ASE specifies the limits applicable to engineered safety systems used to maintain operations within the limits in Sections 2 and 3. Engineered safety systems require calibration, testing, maintenance, and inspection. The frequency of testing and calibration is specified in Section 4.

Section 5 is an Operations Envelope that helps ensure the ASE will not be exceeded. Section 5 defines practices that help limit both not-routinely and routinely encountered hazards in an industrial operation (e.g., Work Planning). Variations of operating parameters within the Operations Envelope are considered normal operations. Variation outside the Operations Envelope but within the ASE Sections 2, 3 and 4 limits merits appropriate attention; however, it does not require termination of Prototype ERL activities or notification of DOE.

1.1 The reference to the method used by the Collider-Accelerator Department for change control of the ASE is the BNL Subject Area on Accelerator Safety.

1.2 A variation beyond the boundaries described in Sections 2, 3, and 4 of this ASE shall be treated as a violation of the ASE and shall be a reportable occurrence, as defined by the BNL SBMS Subject Area on Occurrence Reporting. A violation is defined as not satisfying a Requirement or its specific Authorized Alternative. C-A Department staff

shall make notifications of occurrences according to the requirements in the C-A Operations Procedure Manual.

1.2.1 If a Requirement is not satisfied and it has a specific Authorized Alternative, implement the Authorized Alternate or stop the activity that uses the affected equipment within one hour.

1.3 Emergency actions may be taken that depart from these approved ASE Requirements when no actions consistent with the Requirements are immediately apparent and when these actions are needed to protect the public, worker and environmental safety. These actions shall be approved by the person in charge of facility safety, as defined in the operating procedures, when the emergency occurs and shall be reported to C-AD management within 2-hours.

Formatted: Heading 1

Section 2: BNL Safety Envelope Limits

This section contains the absolute limits that BNL places on Prototype ERL operations to ensure that BNL meets regulatory limits established to protect our environment, public and staff/visitors and that those operations are conducted within the assumptions of the Prototype ERL safety analyses documented in the Prototype ERL SAD, 6-30-08. BNL Safety Envelope Limits for Prototype ERL operations are:

Formatted: Font: Not Bold

2.1. Less than 25 mrem in one year to individuals in other BNL Departments or Divisions adjacent to this Collider-Accelerator Department accelerator facility.

2.2. Less than 5 mrem in one year to a person located at the site boundary.

2.3. Offsite drinking water concentration and on-site potable well water concentration must not result in 4 mrem or greater to an individual in one year.

2.4. Less than 1250 mrem in one year to a Collider-Accelerator Department staff member.

2.5. Less than 10,000 pCi/L in the BNL sanitary sewer effluent due to liquid discharges from Prototype ERL facilities.

2.6. In order to protect groundwater, if the annual activity concentration of sodium-22 or tritium in leachate is calculated to exceed 5% of the Drinking Water Standard, then a cap shall be used unless BNL Management is convinced otherwise.[1]

2.7. All emissions from Prototype ERL facilities are managed in accordance with the Air Emissions subject area.[2] If emissions are anticipated to exceed 0.1 mrem per year to the Maximally Exposed Individual, actions will be taken to ensure operations comply with NESHAP requirements including continuous emissions monitoring and permitting.

[1] BNL SBMS Accelerator Safety Subject Area, Design Practice for Known Beam Loss Locations.
[2] BNL SBMS Subject Area, Radioactive Airborne Emissions.

In order to assist C-AD in verifying and auditing ASE bounding conditions in Section 2, a Compliance Implementation Matrix identifying the ASE requirement, the implementing procedure(s) and the responsible persons is maintained by C-AD management along with the bases for each ASE requirement.

Section 3: Corresponding Prototype ERL Safety Envelope Parameters

This section identifies the measurable limitations on critical operating parameters that, in conjunction with the specifically identified hazard control considerations established by the facility design and construction, ensure that Prototype ERL operations will not exceed the corresponding Safety Envelope Limits discussed in Section 2. These parameters are derived from the safety analyses described in the Prototype ERL SAD, 6-30-08. Prototype ERL safety envelope parameters are:

Formatted: Font: Not Bold

Prototype ERL Beam Limits in Terms of Electron Energy and Beam Power

3.1 Electron energy limit of 3.5 MeV for the super-conducting RF gun.

3.2 The power source of the superconducting gun is limited to delivering 1.~~2~~5 MW of power to the gun.

3.3 Electron energy limit of 25 MeV for the Prototype ERL ring.

3.4 Electron beam power shall not exceed the equivalent of 10 MW of instantaneous power for the electron beam in the Prototype ERL ring.

3.5 The power source for the five-cell cavity will be limited to delivering a maximum of 60 kW of power to the cavity.

3.6 A beam power of 1.~~2~~ 5 MW for a 3.5 MeV electron beam striking the beam dump.

Formatted: Font: (Default) Times New Roman, Font color: Black

The above limits are the maximum beam energy or beam power the Prototype ERL is capable of and cannot be exceeded without changing the structures, systems and components (SSC). Changing ERL prototype SSC requires authorization by C-AD management.

Control of Beam Loss

3.7 Beam-loss-monitors, area-radiation monitors and area-radiation survey results shall be used in order to maintain beam loss "As Low as Reasonably Achievable" as defined in the BNL Radiological Manual. The objective for controlling personnel exposure is to maintain exposure levels below an average of 0.5 mrem per hour, which is to be averaged over one work-month (80 mrem), and be as far below this average as is reasonably achievable.

Access Controls

3.8 The Access Controls System shall be functional during operations with beam. That is, locked gates to the accelerator enclosure shall turn the beam off if unlocked, unfastened or opened when beam is on.

3.9 During the running period, area radiation monitors that are interfaced with the Access Controls System shall be within their calibration date.

3.10 During the running period, the locations of area radiation monitors interfaced with the Access Control System are to be configuration controlled.

Fire Protection

3.11 During periods of beam operation, when access to the primary beam areas is prohibited the installed fire detection and protection systems shall be operable.

Authorized Alternative: Within 2 hours of discovery, the Department Chair or designee may allow partial or full inoperability of any fire detection or protection system for up to 80 hours with beam operations if the benefit of continuing Prototype ERL operations is judged to outweigh the potential risk of fire damage. Operating procedures shall specify the compensatory actions to be taken during inoperability.

3.12 Prototype ERL magnets and power supplies may be energized if the smoke detection system for the energized area can transmit an alarm to summon the BNL Fire/Rescue Group.

Authorized Alternative: The Operations Coordinator, ESH Coordinator or designee may allow partial or full inoperability of any fire detection system or manual alarm station in occupied areas as long as a Fire Watch is posted who can verbally communicate with the BNL Fire/Rescue Group by radio or phone.

In order to assist C-AD in verifying and auditing ASE bounding conditions in Section 3, a Compliance Implementation Matrix identifying the ASE requirement, the implementing procedure(s) and the responsible persons is maintained by C-AD management along with the bases for each ASE requirement.

Section 4: Engineered Safety Systems Requiring Calibration, Testing, Maintenance, and Inspection

The systems and requirements for calibration, testing, maintenance, accuracy or inspections necessary to ensure the integrity of the Prototype ERL safety envelope parameters during operations are given in this section:

4.1. The Access Control System shall be functionally tested in accordance with requirements in the BNL Radiation Control Manual.

4.2. Prototype ERL ventilation exhaust fans used to prevent an oxygen deficiency event shall undergo annual testing (not to exceed 15 months).

4.3. Prototype ERL fire protection shall undergo annual testing (not to exceed 15 months).

4.4. Area radiation monitors shall undergo annual testing (not to exceed 15 months).

4.5. Radiological barriers shall undergo annual visual inspection (not to exceed 15 months).

In order to assist C-AD in verifying and auditing ASE bounding conditions in Section 4, a Compliance Implementation Matrix identifying the ASE requirement, the implementing procedure(s) and the responsible persons is maintained by C-AD management along with the bases for each ASE requirement.

Section 5: Operations ~~Envelop~~Envelope - Administrative Controls

Administrative controls necessary to ensure the integrity of the Prototype ERL safety envelope parameters during operations are:

5.1. Minimum Prototype ERL Control Room Staffing

5.1.1. Prototype ERL Control Room: one Trained Operator and one other person (i.e., ERL operator-in-training or ERL physicist) shall be on duty when Prototype ERL beam is in operation. During beam operations, one of the two must remain in the Prototype ERL Control Room at all times.

Authorized Alternative: If extra person (i.e., ERL operator-in-training or ERL physicist) is incapacitated, the remaining operator may continue operations as long as manning requirements are restored within two hours.

5.2. On-shift operations staff shall be trained and qualified on their safety, operational and emergency responsibilities. Records of training and qualification shall be maintained on the Brookhaven Training Management System (BTMS).

5.3. Work planning and control systems shall comply with the requirements in the C-A Operations Procedure Manual.

5.4. Environmental management shall comply with the requirements in the C-A Operations Procedure Manual.

5.5. Experiment modification and review shall comply with the requirements in the C-A Operations Procedure Manual.

5.5.1. Each upgrade in the Prototype ERL beam parameters or change of Prototype ERL configuration shall be reviewed before running with beam.

5.6. Annually, the C-AD Accelerator Systems Safety Review Committee shall review Prototype ERL's routine operations and facility for safety.

5.6.1. Prototype ERL may lie dormant for a period greater than one year between runs and does not require a review during the dormancy period.

5.7. Industrial hazards shall be controlled in accordance with the applicable portions of the BNL SBMS Subject Area.

5.8. Radiological area classifications during operations shall be in accord with requirements in the BNL Radiation Control Manual.

In order to assist C-AD in verifying and auditing ASE bounding conditions in Section 5, a Compliance Implementation Matrix identifying the ASE requirement, the implementing procedure(s) and the responsible persons is maintained by C-AD management along with the bases for each ASE requirement.

Laboratory Environment Safety and Health Committee
Pressure and Cryogenic Safety Subcommittee

MINUTES OF MEETING 10-03
Jan. 6, 2010

FINAL

Committee Members Present
R. Alforque
R. Beauman
D. Beavis
C. Conrad*
M. Gaffney
S. Kane
R. Karol
E. Lessard
P. Mortazavi
R. Than
J. Tuozzolo

*** non-voting**

Committee Members Absent
E. Haas
R. Travis

Visitors
G. McIntyre
E. Nowak
C. Pai
J. Rose
A. Sitnikov
P. Sullivan

Agenda:
1. **Review the ERL E-gun SRF Cavity/Helium Vessel and the RHIC 56 MHz SRF Cavity/Helium Vessel.**

Minutes of Meeting: Appended on pages 2 through 8.

[Signature on File] 1/21/10	**[Signature on File] 1/26/10**
E. Lessard Date	**C. Parnell Date**
LESHC Chairperson	**ESH ALD**

Chairperson E. Lessard called the meeting of the Laboratory Environment Safety and Health Committee (LESHC) Pressure and Cryogenic Safety Subcommittee (PCSS) to order on Jan. 6, 2010 at 9:10 am. The purpose of the meeting was to review the Energy Recovery Linac (ERL) Electron (E)-gun SRF Cavity/Helium Vessel and the RHIC 56 MHz SRF Cavity/Helium Vessel.

1 **Review of ERL E-gun SRF Cavity/Helium Vessel and RHIC 56 MHz SRF Cavity/Helium.**
G. McIntyre of the Collider-Accelerator Department (C-AD) presented a review of these cavities/helium vessels and C. Pai of C-AD presented his analysis of Advanced Energy Systems' (AES) calculations of these designs. G. McIntyre also presented the option of considering the vacuum vessel of the RHIC 56 MHz cryomodule as a pressure boundary. The presenters and other attendees made the following points during the course of the presentation. [1]

1.1 The E-gun is a vital component of the ERL which has been declared by the Director's Office to be a "mandatory facility" for e-RHIC and is a strategic initiative for BNL.

1.1.1 The E-gun is a unique device world-wide with applications in physics and national security, the Navy having funded some of the initial work of the cavity.

1.2 The E-gun cryomodule consists of an E-gun cavity and helium vessel placed inside a vacuum vessel.

1.2.1 The cavity has niobium walls and niobium is not an ASME listed material. Both the cavity and helium vessel were fabricated in accordance with (IAW) ASME Boiler and Pressure Vessel (B&PV) Code Section VIII Div. 2; however, the equivalent-protection provision of Appendix A to 10CFR851 was followed.

1.2.1.1 Material certifications were required for all materials.

1.2.1.2 Welding Procedure Specifications (WPS)/Brazing Procedure Specifications (BPS) were written for all welds and brazes.

1.2.1.3 The analysis was conducted by Advanced Energy Systems (AES) and verified by C-AD.

1.2.1.4 Procedure Qualification Records (PQRs) for all welds were performed IAW WPS / BPS.

1.2.1.5 Samples from the PQRs were tested for the specific heats used and IAW ASME Section IX as follows: tensile tests; guided bend tests, both face and root; macropolishing; and Charpy-Impact testing.

1.2.2 The cavity was fabricated from a minimum 250 Residual Resistance Ratio (RRR) niobium.

1.2.2.1 All welds were performed IAW WPS by a qualified welder.

1.2.2.2 The cavity welds are full penetration E-B butt welds, either niobium (Nb) to niobium or Nb to Nb 55-Titanium (Ti) 45.

1.2.2.3 All pressure boundary welds on the cavity underwent radiograph examination, per the ASME B&PV Code, and all the welds passed. The vacuum vessel welds were not radiographed.

1.2.2.4 Brazes were performed IAW BPS by a qualified brazer, they went through PQRs, test samples were made, and they passed the Code required examinations.

1.2.3 The helium vessel, fabricated from titanium, and constructed in two sections (shells) IAW ASME B&PV Code, surrounds the elliptical section of the cavity, cools the cavity

[1] The presentation and these Minutes are posted on the LESHC website: http://www.c-ad.bnl.gov/LESHC/LESHC.htm.

via a fill tube on the bottom, and by reducing the pressure of liquid helium with a pump, the helium is cooled from 4 K down to approximately 2 K.

1.2.3.1 Other components of the e-gun cavity and helium vessel assembly are: 4 assembly supports, 4 tuner supports, an RF choke joint, a helium vent port, 2 fundamental power coupler ports tee-ed from the UHV beamline.

1.2.3.2 The assembly supports the cavity in the helium vessel; together the cavity and helium vessel weight 200 lbs.

1.2.3.3 An analysis of one of the bracket supporting welds showed that one bracket would hold the weight of the entire cavity and helium vessel (approximately 200 lbs.) with a safety factor of 23.

1.2.3.4 A tuner mounts to the helium vessel and to the cavity. The range of the tuner is only .02" and the moving of the tuner causes the sides of the cavity to fluctuate in and out slightly; the cavity acts like two capacitor plates so as the capacitance goes down, the frequency goes up.

1.2.3.5 The bellows assembly is made of all titanium construction IAW ASME B&PV Code Sec. VIII Div. 2, part 4.19.

1.2.4 The completed vessel will be welded to the cavity assembly with Ti to Nb-Ti welds which are Code-equivalency compliant and meet the load requirements.

1.2.4.1 All the welds except for the final weld are full penetration butt welds into backing strips. This seems to be the most conservative approach for these welds.

1.2.5 The preliminary design of the cavity to helium vessel welds is designed for equivalent protection as follows:

1.2.5.1 A Nb55Ti FPC flange to the titanium shell is a full penetration butt weld into a backing strip. On the cathode side of the assembly, the material thickness does not change as the material transitions from the shell into the bellows ring.

1.2.5.2 A Ti / Ti shell equator weld will be a full penetration butt weld into a backing strip.

1.2.5.3 The final weld in the assembly which actually sets the frequency of the cavity will be an elongated fillet to achieve the required Y dimension according to Table 4.11.1.

1.2.5.4 None of these welds can be examined once assembled. A radiograph cannot be put inside, the weld is too thin to be ultrasonically tested, and magnetic particles cannot be used because these particles would ruin the cavity.

1.2.5.5 Therefore there will be visual inspection & pressure testing to 1.15 MAWP.

1.2.5.6 Equivalent protection against failure of the weld and release of helium includes burst disks on contiguous vacuum spaces, helium released through a burst disk directed outside and oxygen deficiency alarms in enclosed work areas.

1.2.6 Thomas Jefferson Lab (JLab) will process the cavity and mount the helium vessel.

1.2.6.1 JLab had constructed the 5-cell cavity for BNL.

1.2.6.2 As J-Lab has not done a Ti-NbTi weld, BNL will do exactly the same things they did for the welds for the 5-cell cavity: write a WPS, PQR and sample welds which will be performed IAW the WPS, will be sent out for tensile testing, guided bend tests, macropolishing, etc.

1.2.6.3 BNL's contract with JLab specified that JLab will provide BNL with the documentation for the design and fabrication process of the helium vessel.

1.2.6.4 BNL wants copies of the PQRs for the cavity to helium vessel welds.

1.2.6.5 The maximum pressure of the helium vessel is 23 psia and the testing will be at 26 psia. The helium vessel has reliefs set at 23 psia.

1.2.6.6 A full penetration weld into a backing strip does not require any inspection other than visual inspection but that assumes the material is listed in ASME B&PV Code. As this material, NB55Ti, is not listed, G. McIntyre is asking for approval.

1.2.7 If helium leaks out of the helium vessel, the helium will be piped outside the blockhouse.

1.2.8 If a break in the helium vessel itself occurs, the helium will go into the vacuum vessel which is plumbed to relief at 7 psig and goes into a massive 10" vent header which goes outside the blockhouse.

1.2.9 There are ODH sensors, alarms, and an automatic start ODH fan in the enclosure.

1.2.10 For non-listed material, BNL will obtain material certifications. However, for the Ni-Ti, material certifications for only the chemistry will be provided and BNL will then run tests on the mechanical properties to see if the material falls within the required range.

1.2.11 At a future date, the Committee will be asked to review the overall cryogenic system used to compress helium gas and circulate liquid helium.

1.2.12 The value of the cavity and helium vessel is estimated to be $1.4 million dollars value added.

1.3 Advanced Energy Systems used a limited plastic approach to do the ASME B&PV Code Sec. VIII Div. 2 design-by-analysis calculations of the design of the ERL e-gun SRF cavity. C. Pai verified AES' calculations by rerunning all four failure modes (protection against plastic collapse, protection against local failure, protection against collapse from buckling, and protection against failure from cyclic loading) and compared the results.

1.3.1 For the protection against plastic collapse, the material used in the model is elastic-perfectly plastic with a specified yield strength. A finite element model was developed, with the load factor = 1.5 based on Table 5.4.

1.3.1.1 The maximum allowable working pressure (MAWP) is the relief valve pressure = 23 psia, and the pressure used in the calculations was increased to 1.5 * MAWP = 34.5 psia.

1.3.1.2 The pressure vs displacement graph had a non-zero slope which shows that the cavity does not collapse for pressure loads up to 34.5 psia.

1.3.2 For protection against local failure, the analysis used applied design loads and elastic analysis and compared the local primary membrane + bending principal stresses such that the sum of these stresses $\leq$ 4S where S = 2/3 yield; the yield = 7000 psia and 4S = 18,666 psia.

1.3.2.1 The applied loads were MAWP (23 psia) + gravity, and the material model was elastic.

1.3.2.2 The location of maximum stress was the helium vessel (niobium/titanium).

1.3.2.3 Based on membrane + bending, the principal nodal stresses = 5820 psi, 2950 psi, and 2500 psi, the total = 11,270 psi which is less than 18,666 psia.

1.3.2.4 Based on total membrane + bending + peak, the three nodal stresses = 8920 psi, 3782 psi, and 3631 psi, the total = 16,333 psi which is less than 18,666 psi.

1.3.2.5 There is no location where the sum of the principal stresses will exceed 18,666 psi.

1.3.3 For the protection against collapse from buckling, a static analysis was run to determine pre-stress for eigen-value buckling which used the MAWP (26 psia) and gravity loading. This resulted in a maximum displacement of .013".

1.3.3.1 For the cavity buckling mode, a buckling factor = 47.2 was calculated. A reduction factor of 16.13 was used based on 2/.124 where 2 is required when using the elastic eigen-value methodology and .124 is for spherical or elliptical heads under external pressure.

1.3.3.2 The structure meets the code requirements for buckling failure.

1.3.4 For protection against failure from cyclic loading, for components that do not contain a flaw and the total number of cycles is less than 1000, no fatigue analysis is needed.

1.3.4.1 In this case, there are 2 full range pressure cycles per year for 30 years (60 cycles), no pressure cycles exceed 20% of the design pressure, no metal temperature differentials, and the number of welds between materials of differing coefficients of thermal expansion = 60 cycles; therefore the total number of cycles is the sum of 60 + 0 + 0 + 60 = 120 and no fatigue analysis is needed.

1.3.4.2 For a structure that operates in the plastic range, a ratcheting assessment is required.

1.3.4.2.1 The cyclic loading varied as follows: the pressure was initially ramped up to 26 psia, then down to zero, back up to 23 psia, down to zero, then up again to 23 psia, and then down to zero.

1.3.4.2.2 After the case with the initial pressure of 26 psia, the cavity behaved elastically and there was no more plastic deformation. The cavity deflection of the two cycles at 23 psia was the same; this meaning the cavity is elastic.

1.3.4.2.3 The structure meets the code requirements for protection against ratchet failure.

1.4 The 56 MHz SRF cavity, approximately 72" long, is made from high RRR grade niobium, is a large Quarter Wave Resonator (QWR), and is a major part of the increased luminosity program at RHIC.

1.4.1 The cavity is cooled to ~4.6 K, fed from the RHIC helium system, and will be installed in the "common" area of sector 4 of RHIC.

1.4.2 All work and component fabrication will be done IAW ASME B&PV Code Section VIII Div. 2 and the equivalent-protection provision of Appendix A to 10CFR851 will be followed..

1.4.3 Due to the cavity's complex shape, cavity examination is difficult to impossible.

1.4.4 The cavity has to be isolated from magnetic fields and has two sets of high nickel steel magnetic shields to shield the cavity from the earth's magnetic field (~ .5 Gauss).

1.4.5 The helium vessel surrounds the cavity which will be suspended off nitronic-50 rods, nitron being a standard cryogenic material for this type of application, and there will be no welding.

1.4.6 The cavity has convolutions and clean ports as it is important for SRF cavities to be cleaned properly. They go through a chemical process and then through a high pressure rinse cycle from one end of the cavity to the other end. A fusion pump will take particulate matter and drain it out at the bottom.

1.4.7 There are also ports for mounting instrumentation.

1.5 G. McIntyre presented the following rationale for considering the vacuum vessel as the pressure boundary for the 56 MHz SRF cavity.

1.5.1 Recent experience has shown that achieving Code equivalence with niobium cavities is not possible but achieving equivalent protection is possible.

1.5.2 Cavity vendors throughout the world will not deliver a U-stamped niobium assembly.

1.5.3 A Spallation Neutron Source/ORNL proposal was accepted by ORNL management to move the ASME pressure boundary from the helium vessel to the vacuum vessel on the SNS Power Upgrade Project (PUP) cryomodules.

1.5.4 Advantages of having the vacuum vessel as the pressure boundary include the following:

1.5.4.1 Code-listed materials can be used for the vacuum vessel; Stainless Steel (SST) will be used for the vacuum vessel; SST material properties at low temperature are well known.

1.5.4.2 There is no need for additional testing as there is with using niobium, but PQRs and WBS for SST still have to be provided.

1.5.4.2.1 This assembly, because of its complex structure, has many more welds and it would be difficult to make them Code-compliant. They can be made safe, but the problem is the transition from titanium to niobium.

1.5.4.3 This allows the use of established niobium to Superconducting RF cavity welds. Minimizing weld distortion will decrease possible detuning of the cavity and exceeding the limited tuner range.

1.5.4.4 Vacuum vessel joints are more accessible for examination and allow performance of Code-required inspections without impacting niobium cavity performance.

1.5.4.5 Vacuum vessel welds can be done in-house during installation, will not interrupt the niobium cavity and helium vessel fabrication, and will not jeopardize the niobium cavity surface integrity or cleanliness.

1.5.4.6 This allows the same level of personnel protection: the niobium cavity and helium vessel relief systems will still be in place, and the vacuum vessel will be recognized as the safety pressure boundary and will be built to Code.

1.6 The following actions were proposed for the 56 MHz cavity cryomodule if the Committee agreed that the vacuum vessel could be considered the pressure boundary.

1.6.1 Perform analysis on the niobium cavity and helium vessel IAW ASME B&PV Code, Section VIII with analysis verification required for machine protection.

1.6.2 Vacuum vessel components will be built to Code, welded, and inspected in-house.

1.6.3 The vacuum vessel and venting system will be designed and fabricated for an internal pressure equal to the MAWP of the helium vessel, 20 psia.

1.6.4 The vacuum vessel venting system shall not allow the internal pressure of the vacuum vessel to exceed 15 psig and, therefore, not exceed the threshold for a U stamp.

1.6.5 Analysis shall be done and verified to show the vacuum vessel's ability to withstand and properly vent pressure from helium pressurization.

1.6.6 Material certifications would be required.

1.6.7 BNL WPS/PQRs would be in place for SST pressure vessels, plus an experienced weld staff would be available.

1.6.8 Cryogenics and UHV systems will be relieved independently.

1.6.9 Procurement of the 56 MHz SRF cavity and helium vessel is suspended awaiting comments and approval from the LESHC Pressure and Cryogenic Safety Subcommittee.

1.6.10 The contract with the vendor will specify that BNL must be provided the design and fabrication process of the helium vessel.

1.7 The discussion that developed about having the vacuum vessel be considered the pressure boundary included the following points:

1.7.1 There was a lot of value added to the SRF cavity, and radiographing could not be done because it could destroy the value of the cavity due to loss of cleanliness.

1.7.2 If the vacuum vessel is designed to be a pressure vessel, then it must be U-stamped. It is no longer unique, and a pressure vessel like that could be made and stamped anywhere.

1.7.3 If the PCSS declares the vacuum vessel to be a pressure vessel to which the equivalent protection rule could be applied, then there may be some resistance from DOE.

1.7.4 10CFR851 states that if a vacuum vessel can be backfilled pressurized, then ASME Pressure Vessel Code applies, and it mentions nothing about the value of the internal pressure the vacuum vessel might experience in a transient event. However, the LESHC has assumed internal pressurization of a vacuum vessel must exceed 15 psig in order to apply the Code. By declaring a vacuum vessel to be a pressure vessel at the outset, as is being proposed with the 56 MHz system, then one cannot also take credit for it being a "vacuum vessel that can be over pressurized" – legally it cannot be both a vacuum vessel and a pressure vessel. It must be one or the other in order to apply the rules correctly.

1.7.5 Reliefs on the vacuum vessel are to prevent greater than 15 psig and are thought to be sufficient for a vacuum vessel as long as one also protects from any toxic, explosive or asphyxiate property of a leaking gas or fluid. The PCSS does not insist the Code be used to ensure the walls of the vacuum vessel are suitable for greater than 15 psi absolute internal pressure. The PCSS never treats vacuum vessels as pressure vessels subject to the Code, but if declared to be the pressure boundary, then we would likely be held to the Code and require a U stamp.

1.8 10CFR851 is not part of the ASME code, but it is the overriding regulation.

1.8.1 People have to be protected from the hazard, and DOE is aware of BNL's equivalent protection practice for pressure vessels, and the completely different practice we use to keep vacuum vessels from being considered pressure vessels.

1.8.1.1 A vacuum vessel that can overpressurize and has appropriate reliefs is still considered to be a vacuum vessel, and if helium is also released, an ODH alarm system and other features that could prevent the creation of an oxygen deficient atmosphere in an occupied space are considered essential.

1.8.1.2 The PCSS would consider granting equivalence for the helium vessel or any other inner potentially pressurized vessel because there is equivalent protection through the use of reliefs, external venting, and ODH alarms in the enclosure.

1.8.2 The two possibilities are either the outer vacuum vessel is considered as a pressure vessel and must be U-stamped or the outer vacuum vessel is considered part of the equivalent protection for the inner pressure boundary, a non-stamped helium vessel.

1.8.3 In either case, there is a pressurized system inside, and calculations have to be done to show that the helium vessel wall is properly designed.

1.8.4 The PCSS will have to meet again to review the 56 MHz SRF cavity/helium vessel analysis.

1.9 The Committee suggests that the following information be obtained:

1.9.1 For the 56 MHz cryomodule, how is Oak Ridge and JLab using the new idea and are they requiring the vacuum vessel to be stamped? What are they gaining from this concept?

2 The following motion was crafted by the LESHC:

2.1 The LESHC grants equivalent protection for the welds on the helium vessel for the ERL superconducting RF electron gun, since a leak of helium into occupied spaces is prevented and personnel are alerted using ASME-rated relief valves, piping of released helium goes outside the building, and there are ODH alarms inside the ERL enclosure, subject to completion of the following action.

2.1.1 Provide to the Committee the Procedure Qualification Records for the ERL E-gun SRF cavity to helium vessel welds. (See 1.2.5)

2.2 Recommendation for approval of the motion was made by S. Kane.

2.3 Seconded by R. Alforque.

2.4 The motion was unanimously approved.

3 The meeting was adjourned at 10:55 am.

Lessard, Edward T

From: Conrad, Cheryl S
Sent: Wednesday, March 03, 2010 4:49 PM
To: Lessard, Edward T
Subject: LESHC 10-03 ERL E-gun SRF Cavity/Helium Vessel & RHIC 56 MHz SRF Cavity/Helium Vessel - Status - Closed - Please Post
Attachments: LESHC_10-03_Final_Minutes_Signed_Status 030310 - Closed.pdf.html

Follow Up Flag: Follow up
Flag Status: Flagged

Hi Ed,

Attached is the status version of the minutes indicating action 2.1.1 is closed. The Procedure Qualification Records (PQRs) for the ERL E-gun SRF cavity to helium vessel welds are attached to this pdf file.

Please post when you have a chance.

Thanks.

Regards.

Cheryl

Laboratory Environment Safety and Health Committee
Pressure and Cryogenic Safety Subcommittee

STATUS – 03/03/10 – Closed

MINUTES OF MEETING 10-03
Jan. 6, 2010

FINAL

Committee Members Present
R. Alforque
R. Beauman
D. Beavis
C. Conrad*
M. Gaffney
S. Kane
R. Karol
E. Lessard
P. Mortazavi
R. Than
J. Tuozzolo

*** non-voting**

Committee Members Absent
E. Haas
R. Travis

Visitors
G. McIntyre
E. Nowak
C. Pai
J. Rose
A. Sitnikov
P. Sullivan

Agenda:
1. **Review the ERL E-gun SRF Cavity/Helium Vessel and the RHIC 56 MHz SRF Cavity/Helium Vessel.**

Minutes of Meeting: Appended on pages 2 through 8.

[Signature on File] 1/21/10	**[Signature on File] 1/26/10**
E. Lessard Date	**C. Parnell Date**
LESHC Chairperson	**ESH ALD**

Chairperson E. Lessard called the meeting of the Laboratory Environment Safety and Health Committee (LESHC) Pressure and Cryogenic Safety Subcommittee (PCSS) to order on Jan. 6, 2010 at 9:10 am. The purpose of the meeting was to review the Energy Recovery Linac (ERL) Electron (E)-gun SRF Cavity/Helium Vessel and the RHIC 56 MHz SRF Cavity/Helium Vessel.

1 **Review of ERL E-gun SRF Cavity/Helium Vessel and RHIC 56 MHz SRF Cavity/Helium.**
G. McIntyre of the Collider-Accelerator Department (C-AD) presented a review of these cavities/helium vessels and C. Pai of C-AD presented his analysis of Advanced Energy Systems' (AES) calculations of these designs. G. McIntyre also presented the option of considering the vacuum vessel of the RHIC 56 MHz cryomodule as a pressure boundary. The presenters and other attendees made the following points during the course of the presentation. [1]

1.1 The E-gun is a vital component of the ERL which has been declared by the Director's Office to be a "mandatory facility" for e-RHIC and is a strategic initiative for BNL.

1.1.1 The E-gun is a unique device world-wide with applications in physics and national security, the Navy having funded some of the initial work of the cavity.

1.2 The E-gun cryomodule consists of an E-gun cavity and helium vessel placed inside a vacuum vessel.

1.2.1 The cavity has niobium walls and niobium is not an ASME listed material. Both the cavity and helium vessel were fabricated in accordance with (IAW) ASME Boiler and Pressure Vessel (B&PV) Code Section VIII Div. 2; however, the equivalent-protection provision of Appendix A to 10CFR851 was followed.

1.2.1.1 Material certifications were required for all materials.

1.2.1.2 Welding Procedure Specifications (WPS)/Brazing Procedure Specifications (BPS) were written for all welds and brazes.

1.2.1.3 The analysis was conducted by Advanced Energy Systems (AES) and verified by C-AD.

1.2.1.4 Procedure Qualification Records (PQRs) for all welds were performed IAW WPS / BPS.

1.2.1.5 Samples from the PQRs were tested for the specific heats used and IAW ASME Section IX as follows: tensile tests; guided bend tests, both face and root; macropolishing; and Charpy-Impact testing.

1.2.2 The cavity was fabricated from a minimum 250 Residual Resistance Ratio (RRR) niobium.

1.2.2.1 All welds were performed IAW WPS by a qualified welder.

1.2.2.2 The cavity welds are full penetration E-B butt welds, either niobium (Nb) to niobium or Nb to Nb 55-Titanium (Ti) 45.

1.2.2.3 All pressure boundary welds on the cavity underwent radiograph examination, per the ASME B&PV Code, and all the welds passed. The vacuum vessel welds were not radiographed.

1.2.2.4 Brazes were performed IAW BPS by a qualified brazer, they went through PQRs, test samples were made, and they passed the Code required examinations.

1.2.3 The helium vessel, fabricated from titanium, and constructed in two sections (shells) IAW ASME B&PV Code, surrounds the elliptical section of the cavity, cools the cavity

[1] The presentation and these Minutes are posted on the LESHC website: http://www.c-ad.bnl.gov/LESHC/LESHC.htm.

via a fill tube on the bottom, and by reducing the pressure of liquid helium with a pump, the helium is cooled from 4 K down to approximately 2 K.

1.2.3.1 Other components of the e-gun cavity and helium vessel assembly are: 4 assembly supports, 4 tuner supports, an RF choke joint, a helium vent port, 2 fundamental power coupler ports tee-ed from the UHV beamline.

1.2.3.2 The assembly supports the cavity in the helium vessel; together the cavity and helium vessel weight 200 lbs.

1.2.3.3 An analysis of one of the bracket supporting welds showed that one bracket would hold the weight of the entire cavity and helium vessel (approximately 200 lbs.) with a safety factor of 23.

1.2.3.4 A tuner mounts to the helium vessel and to the cavity. The range of the tuner is only .02" and the moving of the tuner causes the sides of the cavity to fluctuate in and out slightly; the cavity acts like two capacitor plates so as the capacitance goes down, the frequency goes up.

1.2.3.5 The bellows assembly is made of all titanium construction IAW ASME B&PV Code Sec. VIII Div. 2, part 4.19.

1.2.4 The completed vessel will be welded to the cavity assembly with Ti to Nb-Ti welds which are Code-equivalency compliant and meet the load requirements.

1.2.4.1 All the welds except for the final weld are full penetration butt welds into backing strips. This seems to be the most conservative approach for these welds.

1.2.5 The preliminary design of the cavity to helium vessel welds is designed for equivalent protection as follows:

1.2.5.1 A Nb55Ti FPC flange to the titanium shell is a full penetration butt weld into a backing strip. On the cathode side of the assembly, the material thickness does not change as the material transitions from the shell into the bellows ring.

1.2.5.2 A Ti / Ti shell equator weld will be a full penetration butt weld into a backing strip.

1.2.5.3 The final weld in the assembly which actually sets the frequency of the cavity will be an elongated fillet to achieve the required Y dimension according to Table 4.11.1.

1.2.5.4 None of these welds can be examined once assembled. A radiograph cannot be put inside, the weld is too thin to be ultrasonically tested, and magnetic particles cannot be used because these particles would ruin the cavity.

1.2.5.5 Therefore there will be visual inspection & pressure testing to 1.15 MAWP.

1.2.5.6 Equivalent protection against failure of the weld and release of helium includes burst disks on contiguous vacuum spaces, helium released through a burst disk directed outside and oxygen deficiency alarms in enclosed work areas.

1.2.6 Thomas Jefferson Lab (JLab) will process the cavity and mount the helium vessel.

1.2.6.1 JLab had constructed the 5-cell cavity for BNL.

1.2.6.2 As J-Lab has not done a Ti-NbTi weld, BNL will do exactly the same things they did for the welds for the 5-cell cavity: write a WPS, PQR and sample welds which will be performed IAW the WPS, will be sent out for tensile testing, guided bend tests, macropolishing, etc.

1.2.6.3 BNL's contract with JLab specified that JLab will provide BNL with the documentation for the design and fabrication process of the helium vessel.

1.2.6.4 BNL wants copies of the PQRs for the cavity to helium vessel welds.

1.2.6.5 The maximum pressure of the helium vessel is 23 psia and the testing will be at 26 psia. The helium vessel has reliefs set at 23 psia.

1.2.6.6 A full penetration weld into a backing strip does not require any inspection other than visual inspection but that assumes the material is listed in ASME B&PV Code. As this material, NB55Ti, is not listed, G. McIntyre is asking for approval.

1.2.7 If helium leaks out of the helium vessel, the helium will be piped outside the blockhouse.

1.2.8 If a break in the helium vessel itself occurs, the helium will go into the vacuum vessel which is plumbed to relief at 7 psig and goes into a massive 10" vent header which goes outside the blockhouse.

1.2.9 There are ODH sensors, alarms, and an automatic start ODH fan in the enclosure.

1.2.10 For non-listed material, BNL will obtain material certifications. However, for the Ni-Ti, material certifications for only the chemistry will be provided and BNL will then run tests on the mechanical properties to see if the material falls within the required range.

1.2.11 At a future date, the Committee will be asked to review the overall cryogenic system used to compress helium gas and circulate liquid helium.

1.2.12 The value of the cavity and helium vessel is estimated to be $1.4 million dollars value added.

1.3 Advanced Energy Systems used a limited plastic approach to do the ASME B&PV Code Sec. VIII Div. 2 design-by-analysis calculations of the design of the ERL e-gun SRF cavity. C. Pai verified AES' calculations by rerunning all four failure modes (protection against plastic collapse, protection against local failure, protection against collapse from buckling, and protection against failure from cyclic loading) and compared the results.

1.3.1 For the protection against plastic collapse, the material used in the model is elastic-perfectly plastic with a specified yield strength. A finite element model was developed, with the load factor = 1.5 based on Table 5.4.

1.3.1.1 The maximum allowable working pressure (MAWP) is the relief valve pressure = 23 psia, and the pressure used in the calculations was increased to 1.5 * MAWP = 34.5 psia.

1.3.1.2 The pressure vs displacement graph had a non-zero slope which shows that the cavity does not collapse for pressure loads up to 34.5 psia.

1.3.2 For protection against local failure, the analysis used applied design loads and elastic analysis and compared the local primary membrane + bending principal stresses such that the sum of these stresses $\leq$ 4S where S = 2/3 yield; the yield = 7000 psia and 4S = 18,666 psia.

1.3.2.1 The applied loads were MAWP (23 psia) + gravity, and the material model was elastic.

1.3.2.2 The location of maximum stress was the helium vessel (niobium/titanium).

1.3.2.3 Based on membrane + bending, the principal nodal stresses = 5820 psi, 2950 psi, and 2500 psi, the total = 11,270 psi which is less than 18,666 psia.

1.3.2.4 Based on total membrane + bending + peak, the three nodal stresses = 8920 psi, 3782 psi, and 3631 psi, the total = 16,333 psi which is less than 18,666 psi.

1.3.2.5 There is no location where the sum of the principal stresses will exceed 18,666 psi.

1.3.3 For the protection against collapse from buckling, a static analysis was run to determine pre-stress for eigen-value buckling which used the MAWP (26 psia) and gravity loading. This resulted in a maximum displacement of .013".

1.3.3.1 For the cavity buckling mode, a buckling factor = 47.2 was calculated. A reduction factor of 16.13 was used based on 2/.124 where 2 is required when using the elastic eigen-value methodology and .124 is for spherical or elliptical heads under external pressure.

1.3.3.2 The structure meets the code requirements for buckling failure.

1.3.4 For protection against failure from cyclic loading, for components that do not contain a flaw and the total number of cycles is less than 1000, no fatigue analysis is needed.

1.3.4.1 In this case, there are 2 full range pressure cycles per year for 30 years (60 cycles), no pressure cycles exceed 20% of the design pressure, no metal temperature differentials, and the number of welds between materials of differing coefficients of thermal expansion = 60 cycles; therefore the total number of cycles is the sum of 60 + 0 + 0 + 60 = 120 and no fatigue analysis is needed.

1.3.4.2 For a structure that operates in the plastic range, a ratcheting assessment is required.

1.3.4.2.1 The cyclic loading varied as follows: the pressure was initially ramped up to 26 psia, then down to zero, back up to 23 psia, down to zero, then up again to 23 psia, and then down to zero.

1.3.4.2.2 After the case with the initial pressure of 26 psia, the cavity behaved elastically and there was no more plastic deformation. The cavity deflection of the two cycles at 23 psia was the same; this meaning the cavity is elastic.

1.3.4.2.3 The structure meets the code requirements for protection against ratchet failure.

1.4 The 56 MHz SRF cavity, approximately 72" long, is made from high RRR grade niobium, is a large Quarter Wave Resonator (QWR), and is a major part of the increased luminosity program at RHIC.

1.4.1 The cavity is cooled to ~4.6 K, fed from the RHIC helium system, and will be installed in the "common" area of sector 4 of RHIC.

1.4.2 All work and component fabrication will be done IAW ASME B&PV Code Section VIII Div. 2 and the equivalent-protection provision of Appendix A to 10CFR851 will be followed..

1.4.3 Due to the cavity's complex shape, cavity examination is difficult to impossible.

1.4.4 The cavity has to be isolated from magnetic fields and has two sets of high nickel steel magnetic shields to shield the cavity from the earth's magnetic field (~ .5 Gauss).

1.4.5 The helium vessel surrounds the cavity which will be suspended off nitronic-50 rods, nitron being a standard cryogenic material for this type of application, and there will be no welding.

1.4.6 The cavity has convolutions and clean ports as it is important for SRF cavities to be cleaned properly. They go through a chemical process and then through a high pressure rinse cycle from one end of the cavity to the other end. A fusion pump will take particulate matter and drain it out at the bottom.

1.4.7 There are also ports for mounting instrumentation.

1.5 G. McIntyre presented the following rationale for considering the vacuum vessel as the pressure boundary for the 56 MHz SRF cavity.

1.5.1 Recent experience has shown that achieving Code equivalence with niobium cavities is not possible but achieving equivalent protection is possible.

1.5.2 Cavity vendors throughout the world will not deliver a U-stamped niobium assembly.

1.5.3 A Spallation Neutron Source/ORNL proposal was accepted by ORNL management to move the ASME pressure boundary from the helium vessel to the vacuum vessel on the SNS Power Upgrade Project (PUP) cryomodules.

1.5.4 Advantages of having the vacuum vessel as the pressure boundary include the following:

1.5.4.1 Code-listed materials can be used for the vacuum vessel; Stainless Steel (SST) will be used for the vacuum vessel; SST material properties at low temperature are well known.

1.5.4.2 There is no need for additional testing as there is with using niobium, but PQRs and WBS for SST still have to be provided.

1.5.4.2.1 This assembly, because of its complex structure, has many more welds and it would be difficult to make them Code-compliant. They can be made safe, but the problem is the transition from titanium to niobium.

1.5.4.3 This allows the use of established niobium to Superconducting RF cavity welds. Minimizing weld distortion will decrease possible detuning of the cavity and exceeding the limited tuner range.

1.5.4.4 Vacuum vessel joints are more accessible for examination and allow performance of Code-required inspections without impacting niobium cavity performance.

1.5.4.5 Vacuum vessel welds can be done in-house during installation, will not interrupt the niobium cavity and helium vessel fabrication, and will not jeopardize the niobium cavity surface integrity or cleanliness.

1.5.4.6 This allows the same level of personnel protection: the niobium cavity and helium vessel relief systems will still be in place, and the vacuum vessel will be recognized as the safety pressure boundary and will be built to Code.

1.6 The following actions were proposed for the 56 MHz cavity cryomodule if the Committee agreed that the vacuum vessel could be considered the pressure boundary.

1.6.1 Perform analysis on the niobium cavity and helium vessel IAW ASME B&PV Code, Section VIII with analysis verification required for machine protection.

1.6.2 Vacuum vessel components will be built to Code, welded, and inspected in-house.

1.6.3 The vacuum vessel and venting system will be designed and fabricated for an internal pressure equal to the MAWP of the helium vessel, 20 psia.

1.6.4 The vacuum vessel venting system shall not allow the internal pressure of the vacuum vessel to exceed 15 psig and, therefore, not exceed the threshold for a U stamp.

1.6.5 Analysis shall be done and verified to show the vacuum vessel's ability to withstand and properly vent pressure from helium pressurization.

1.6.6 Material certifications would be required.

1.6.7 BNL WPS/PQRs would be in place for SST pressure vessels, plus an experienced weld staff would be available.

1.6.8 Cryogenics and UHV systems will be relieved independently.

1.6.9 Procurement of the 56 MHz SRF cavity and helium vessel is suspended awaiting comments and approval from the LESHC Pressure and Cryogenic Safety Subcommittee.

1.6.10 The contract with the vendor will specify that BNL must be provided the design and fabrication process of the helium vessel.

1.7 The discussion that developed about having the vacuum vessel be considered the pressure boundary included the following points:

1.7.1 There was a lot of value added to the SRF cavity, and radiographing could not be done because it could destroy the value of the cavity due to loss of cleanliness.

1.7.2 If the vacuum vessel is designed to be a pressure vessel, then it must be U-stamped. It is no longer unique, and a pressure vessel like that could be made and stamped anywhere.

1.7.3 If the PCSS declares the vacuum vessel to be a pressure vessel to which the equivalent protection rule could be applied, then there may be some resistance from DOE.

1.7.4 10CFR851 states that if a vacuum vessel can be backfilled pressurized, then ASME Pressure Vessel Code applies, and it mentions nothing about the value of the internal pressure the vacuum vessel might experience in a transient event. However, the LESHC has assumed internal pressurization of a vacuum vessel must exceed 15 psig in order to apply the Code. By declaring a vacuum vessel to be a pressure vessel at the outset, as is being proposed with the 56 MHz system, then one cannot also take credit for it being a "vacuum vessel that can be over pressurized" – legally it cannot be both a vacuum vessel and a pressure vessel. It must be one or the other in order to apply the rules correctly.

1.7.5 Reliefs on the vacuum vessel are to prevent greater than 15 psig and are thought to be sufficient for a vacuum vessel as long as one also protects from any toxic, explosive or asphyxiate property of a leaking gas or fluid. The PCSS does not insist the Code be used to ensure the walls of the vacuum vessel are suitable for greater than 15 psi absolute internal pressure. The PCSS never treats vacuum vessels as pressure vessels subject to the Code, but if declared to be the pressure boundary, then we would likely be held to the Code and require a U stamp.

1.8 10CFR851 is not part of the ASME code, but it is the overriding regulation.

1.8.1 People have to be protected from the hazard, and DOE is aware of BNL's equivalent protection practice for pressure vessels, and the completely different practice we use to keep vacuum vessels from being considered pressure vessels.

1.8.1.1 A vacuum vessel that can overpressurize and has appropriate reliefs is still considered to be a vacuum vessel, and if helium is also released, an ODH alarm system and other features that could prevent the creation of an oxygen deficient atmosphere in an occupied space are considered essential.

1.8.1.2 The PCSS would consider granting equivalence for the helium vessel or any other inner potentially pressurized vessel because there is equivalent protection through the use of reliefs, external venting, and ODH alarms in the enclosure.

1.8.2 The two possibilities are either the outer vacuum vessel is considered as a pressure vessel and must be U-stamped or the outer vacuum vessel is considered part of the equivalent protection for the inner pressure boundary, a non-stamped helium vessel.

1.8.3 In either case, there is a pressurized system inside, and calculations have to be done to show that the helium vessel wall is properly designed.

1.8.4 The PCSS will have to meet again to review the 56 MHz SRF cavity/helium vessel analysis.

1.9 The Committee suggests that the following information be obtained:

1.9.1 For the 56 MHz cryomodule, how is Oak Ridge and JLab using the new idea and are they requiring the vacuum vessel to be stamped? What are they gaining from this concept?

Addendum: 3/2/10, G. McIntyre provided the following information: JLab will continue to use the process that was used on the Spallation Neutron Source (SNS) SRF cavity cryomodules – the helium vessel and cavity components that contain the helium will act as the pressure boundary. Now they will follow the Code similar to the process our PCSS is using.

The SNS at Oak Ridge has used a 1988 code interpretation to redesign their power upgrade project (PUP) cryomodule. Using the interpretation the pressure boundary of the PUP cryomodule will be moved to the vacuum vessel and the vacuum vessel will be a U-stamped vessel. The vacuum vessels of these cavities are fairly simple and therefore conducive to this approach.

2 The following motion was crafted by the LESHC:

2.1 The LESHC grants equivalent protection for the welds on the helium vessel for the ERL superconducting RF electron gun, since a leak of helium into occupied spaces is prevented and personnel are alerted using ASME-rated relief valves, piping of released helium goes outside the building, and there are ODH alarms inside the ERL enclosure, subject to completion of the following action.

2.1.1 Provide to the Committee the Procedure Qualification Records for the ERL E-gun SRF cavity to helium vessel welds. (See 1.2.5) Response: File erl_1242g00001qar-02.pdf (attached) contains the weld tests and the PQR for all the e-Gun cavity welds. It is stored in the CAD engineering archives, under ERL, QA Documents. **Closed**.

2.2 Recommendation for approval of the motion was made by S. Kane.

2.3 Seconded by R. Alforque.

2.4 The motion was unanimously approved.

3 The meeting was adjourned at 10:55 am.

C-A D Engineering Design Support Documentation Cover Page

1242G00001 QAR-02

Title: ***e-Gun Weld Test Results and PQRs***	Author: Gary McIntyre
Subject: AES-supplied PQRs (listed as Sequence No.) and corresponding LTI-supplied weld test results for welds in the ERL electron gun SRF cavity	
C-A Department Group: Energy Recovery Linac	Checked: Gary McIntyre Approval: Joseph Tuozzolo
Documentation Type: ☐ Written Technical Paper ☐ Design Calculations ☐ Design Review Presentation ☐ Design Certification ☐ Specification ☐ Procurement Documentation ☐ Safety/ALARA Review Presentation X Other:Procedure Qualification Records and Weld Test Results	Equipment Type: ☐ Magnets and Power Supplies ☐ Vacuum Systems X RF Systems ☐ Cryogenic Systems ☐ Experimental Equipment ☐ Beam Instrumentation ☐ Water Systems ☐ Buildings, Structures, and Shielding X Other: Energy Recovery Linac
Equipment Location: ☐ Tandem Van DeGraff ☐ Linac ☐ Booster ☐ AGS ☐ RHIC X 912 Experimental Area ☐ 919 Experimental Area ☐ RHIC Experimental Areas ☐ SNS _____ _____ ☐ Buildings, Structures, and Shielding X Other __Energy Recovery Linac_____	Associated information for cataloging (if available fill in the number): ☐ C-A D Design Room Job No. _____ ☐ C-A D Design Room Drawing No. _ _____ ☐ C-A D Specification No. _____ ☐ C-A D Experiment No. _____ X Other __AES DWG#_1242G00001_____

ERL ELECTRON GUN WELD PROCEDURE QUALIFICATION RECORDS

PO Line Item #	Test Type	Drawing	Number	Weld Type	Weld Thicknesses (in. / in.)	Weld Angle from Normal	Material Types	Procedure Qualification Record Number (AES -Seq. No.)	Number of Tests Required: Tensile	Min. Tensile Strength (KSI)	Min. Yield Strength (KSI)	Macropolishing	Macro Results	GBT - Root *	GBT-R Results	GBT- Face **	GBT-F Results	CVN	Min. CVN Energy (FT-LBS)
1 & 2	Tensile Test / Macropolishing	1242T00	101	Interlocking Butt	0.070 / 0.070	N/A	RRR / RRR	AES- EGUN-234	3	19.2	8.8	2	S						
1 & 2	Tensile Test / Macropolishing	1242T00	102	Angle Interlocking Butt	0.118 / 0.118	13°	RRR / RRR	AES- EGUN-236	3	23.3	9.2	2	S						
1 & 2	Tensile Test / Macropolishing	1242T00	103	Interlocking Butt	0.253 / 0.253	N/A	RRR / RRR	AES- EGUN-241	3	20.5	7.9	2	S						
1 & 2	Tensile Test / Macropolishing	1242T00	104	Angle Interlocking Butt	0.165 / 0.335	30°	RRR / RRR	AES- EGUN-256	3	18.3	9.2	2	S						
1 & 2	Tensile Test / Macropolishing	1242T00	106	Interlocking Butt	0.157 / 0.157	N/A	RRR / RRR	AES- EGUN-245	3	22.4	9.6	2	S						
1 & 2	Tensile Test / Macropolishing	1242T00	107	Angle Interlocking Butt	0.157 / 0.157	19.5°	RRR / RRR	AES- EGUN-242	3	20.2	9.7	2	S						
1 & 2	Tensile Test / Macropolishing	1242T00	108	Butt	0.330 / 0.330	N/A	RRR / NbTi	AES- EGUN-249	3	24.0	11.1	2	S						
1 & 2	Tensile Test / Macropolishing	1242T00	110	Butt	0.260 / 0.260	N/A	RRR / NbTi	AES- EGUN-247	3	23.8	12.0	2	S						
1 & 2	Tensile Test / Macropolishing	1242T00	111	Butt	0.375 / 0.313	N/A	NbTi / NbTi	AES- EGUN-254	3	62.0	56.5	2	S						
3 & 4	Guided Bend Test Root / Face	1242T00	117	Interlocking Butt	0.157 / 0.157	N/A	RRR / RRR	AES- EGUN-246						3	S	3	S		
3 & 4	Guided Bend Test Root / Face	1242T00	118	Angle Interlocking Butt	0.157 / 0.157	19.5°	RRR / RRR	AES- EGUN-243						3	S	3	S		
3 & 4	Guided Bend Test Root / Face	1242T00	120	Butt	0.157 / 0.157	N/A	NbTi / NbTi	AES- EGUN-252						3	S	3	S		
5	CV-notch Impact Test @77K	1242T00	121	Interlocking Butt	0.253 / 0.253	N/A	RRR / RRR	AES- EGUN-239										3	4
5	CV-notch Impact Test @77K	1242T00	122	Angle Interlocking Butt	0.165 / 0.335	30°	RRR / RRR	AES- EGUN-255										3	4
5	CV-notch Impact Test @77K	1242T00	123	Angle Interlocking Butt	0.157 / 0.157	19.5°	RRR / RRR	AES- EGUN-244										3	1
5	CV-notch Impact Test @77K	1242T00	124	Butt	0.330 / 0.330	N/A	RRR / NbTi	AES- EGUN-251										3	4
5	CV-notch Impact Test @77K	1242T00	125	Butt	0.375 / 0.313	N/A	NbTi / NbTi	AES- EGUN-253										3	40
3 & 4	Guided Bend Test Root / Face	1242T00	127	Interlocking Butt	0.070 / 0.070	N/A	RRR / RRR	AES- EGUN-235						3	S	3	S		
3 & 4	Guided Bend Test Root / Face	1242T00	128	Angle Interlocking Butt	0.118 / 0.118	13°	RRR / RRR	AES- EGUN-237						3	S	3	S		
3 & 4	Guided Bend Test Root / Face	1242T00	129	Angle Interlocking Butt	0.165 / 0.335	30°	RRR / RRR	AES- EGUN-257						3	S	3	S		
3 & 4	Guided Bend Test Root / Face	1242T00	130	Butt	0.330 / 0.330	N/A	RRR / NbTi	AES- EGUN-250						3	S	3	S		
3 & 4	Guided Bend Test Root / Face	1242T00	132	Butt	0.260 / 0.260	N/A	RRR / NbTi	AES- EGUN-248						3	S	3	S		
5	CV-notch Impact Test @77K	1242T00	133	Angle Interlocking Butt	0.118 / 0.118	13°	RRR / RRR	AES- EGUN-238										3	1
3 & 4	Guided Bend Test	1242T00	134	Interlocking Butt	0.253 / 0.253	N/A	RRR / RRR	AES- EGUN-240						3	S	3	S		
5	CV-notch Impact Test @77K	1242T00	126	No welding - material sample														3	2
6	CV-notch Impact Test @4K	1242T00	126	No welding - material sample														3	3
									27			18		27		27		24	

* - Face of weld is the wider end of the weld "V" when weld zone is viewed from side of sample.
** - Root of weld is the smaller end of the weld "V" (point) when weld zone is viewed from side of sample.

S - Satisfactory
U - Unsatisfactory

Electron Beam Welding Data Sheet

WO/ST No.: 001600	Seq. No.234
Operation No.: 6&7	Sheet 1 of 1

Customer: Brookhaven National Lab.		
Date: 2/6/2009	Charge Number:GC1292-001	
Program Number: O0345		
Part Name: Tension test specimen		
Part Number:1242T00101-5	Rev.N/A	Qty. 1
Serial Number: N/A		

Sketch:

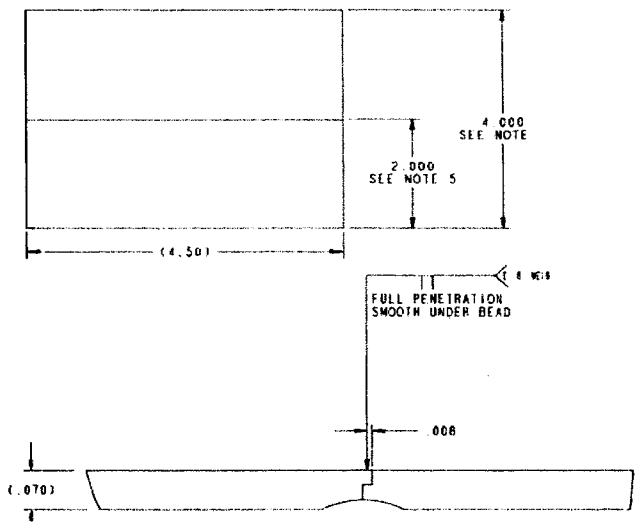

Vendor used for welding: Advanced Energy Systems, Inc.
Machine Type: Electron Beam
Machine Serial Number: 636
Gun Type: BK 1.4 mm fil. V-Style Ribbon
Operator: Ted Matos
Weld Description
Specification Number:WPS-N-1-08
Material 1: Niobium .070
Material 2: Niobium .070
Weld Type: liner full pen. smooth under bead
Joint Type: Interlocking
Joint Thickness: .070
Tooling
Fixture Type: test piece holder
Fixture Angle: 0 degree
Weld Cycle Data
Vacuum Level: 2.2 x 10 -5
Ramp Up: N/A
Over Lap: N/A
Fade Out: N/A
Cool down time in vacuum: 30 min.
Back fill time to 20 Torr: 22 min
Cool down time at 20 Torr: 15 min
Temperature at atmosphere: 92.0 degrees

Penetration Requirements:	%	Depth (Inches)	Length
Spot Tack Weld			N/A
Stitch Tack Weld			
Seal Weld			N/A
Weld	100	.070	N/A
Cosmetic Weld			N/A

Weld Type	Beam kV	Beam mA	Frequency Hz	Amplitude (X / Y)	Spot Size Inches	Welding Speed IN / MIN	Welding Speed SEC / REV	Defocus	Gun to work Distance
Tack Weld	100	7	1000	X=6.5 Y=6.5	X=.075 Y=.075	18	N/A	-4	11
Seal Weld	100	10	1000	X=6.5 Y=6.5	X=.075 Y=.075	18	N/A	-4	11 (550)
Weld	100	17	1000	X=6.5 Y=6.5	X= .075 Y=.075	18	N/A	-4	
Cosmetic Weld				X= Y=	X= Y=				

Comments: "No fit up gap, No filler material and No Pre-heat of parts required" visual inspection was good.

Certified Test Report

LABORATORY TESTING INC.
2331 Topaz Drive, Hatfield, PA 19440
Phone: 800-219-9095 • Fax: 800-219-9096

BNL001-09-05-15980-1

Accredited Nadcap™
Materials Testing Laboratory
Nondestructive Testing

SOLD TO
Brookhaven National Laboratory
Collider-Accelerator Dept.
Building 911A
Upton, NY 11973-5000

SHIP TO
Brookhaven National Laboratory
Collider-Accelerator Dept.
Building 911A
Upton, NY 11973-5000
ATTN: G. T. McIntyre

CUSTOMER P.O.	CERTIFICATION DATE	SHIP VIA
BNL-0000148742	6/18/2009	EMAIL & UPS

DESCRIPTION

Quantity:	1
Size:	4" x 4 1/2"
PO Line Item No.:	1 & 2
Drawing No.:	1242T00 101
Weld Type:	Interlocking Butt
Weld Thicknesses:	0.070 / 0.070
Weld Angle from Norm:	N/A
Material Types:	RRR / RRR
PQR No. (AES-Seq. No):	AES- EGUN-234
Material:	Niobium

TENSILE TEST:

APPLICABLE SPECIFICATIONS: **ASME BPVC, SECTION IX, 2007 EDITION, 2008a ADDENDA**

	Specimen #1	Specimen #2	Specimen #3
Size (Inches)	0.2515 x 0.0585	0.2510 x 0.0585	0.2510 x 0.0590
Area (Square Inches)	0.0147	0.0147	0.0148
Tensile Load (Pounds)	317.00	329.75	284.00
Tensile Strength (KSI)	21.5	22.5	19.2
Yield Load (.2%) (Pounds)	129.79	141.21	130.51
Yield Strength (.2%) (KSI)	8.8	9.6	8.8
Elongation (In 2") (%)	19	20	19
Failure Location	Ductile	Ductile	Ductile
Mode of Fracture	Weld Area	Weld Area	Weld Area

LABORATORY TESTING INC.
2331 Topaz Drive, Hatfield, PA 19440
Phone: 800-219-9095 ◆ Fax: 800-219-9096

Certified Test Report

BNL001-09-05-15980-1

Accredited Nadcap™
Materials Testing Laboratory
Nondestructive Testing

A Macro Examination was performed on (2) pieces of the submitted Test Specimens in accordance with Customer Instructions with the following results:

ACTUAL: The samples were sectioned, ground, and etched in accordance with LTI Procedure Numbers 90-MACRO-1, Rev. 2, Dated 11/2/06 and 90-MICRO-1, Rev. 6, Dated 6/18/01.

Representative photographs revealed that the general macrostructure of the materials exhibited no evidence of cracking, excessive amounts of inclusions or significant porosity as shown in Figures 1-2.

The services performed above were done in accordance with LTI's Quality System Program Manual Revision 18 dated 7/27/07 and ISO/IEC 17025. These results relate only to the items tested and this report shall not be reproduced, except in full, without the written approval of Laboratory Testing, Inc. L.T.I. is accredited by PRI to ISO17025 and by Nadcap for NDT and Materials Testing for the test methods and specific services as listed in the Scopes of Accreditation available at www.labtesting.com and www.eAuditNet.com. The results reported on this test report represent the actual attributes of the material tested and indicate full compliance with all applicable specification and contract requirements.

MERCURY CONTAMINATION: During the testing and inspection, the product did not come in direct contact with mercury or any of its compounds nor with any mercury containing devices employing a single boundary of containment.

NOTE: The recording of false, fictitious or fraudulent statements or entries on this document may be punishable as a felony under Federal Statutes.

Sherri L. Scheifele
QA Specialist

Sherri L Scheifele

By: _____
Authorized Signature

LABORATORY TESTING INC.
2331 Topaz Drive, Hatfield, PA 19440
Phone: 800-219-9095 ◆ Fax: 800-219-9096

Certified Test Report

BNL001-09-05-15980-1

Accredited Nadcap™
Materials Testing Laboratory
Nondestructive Testing

PHOTOGRAPHIC SUBMITTAL

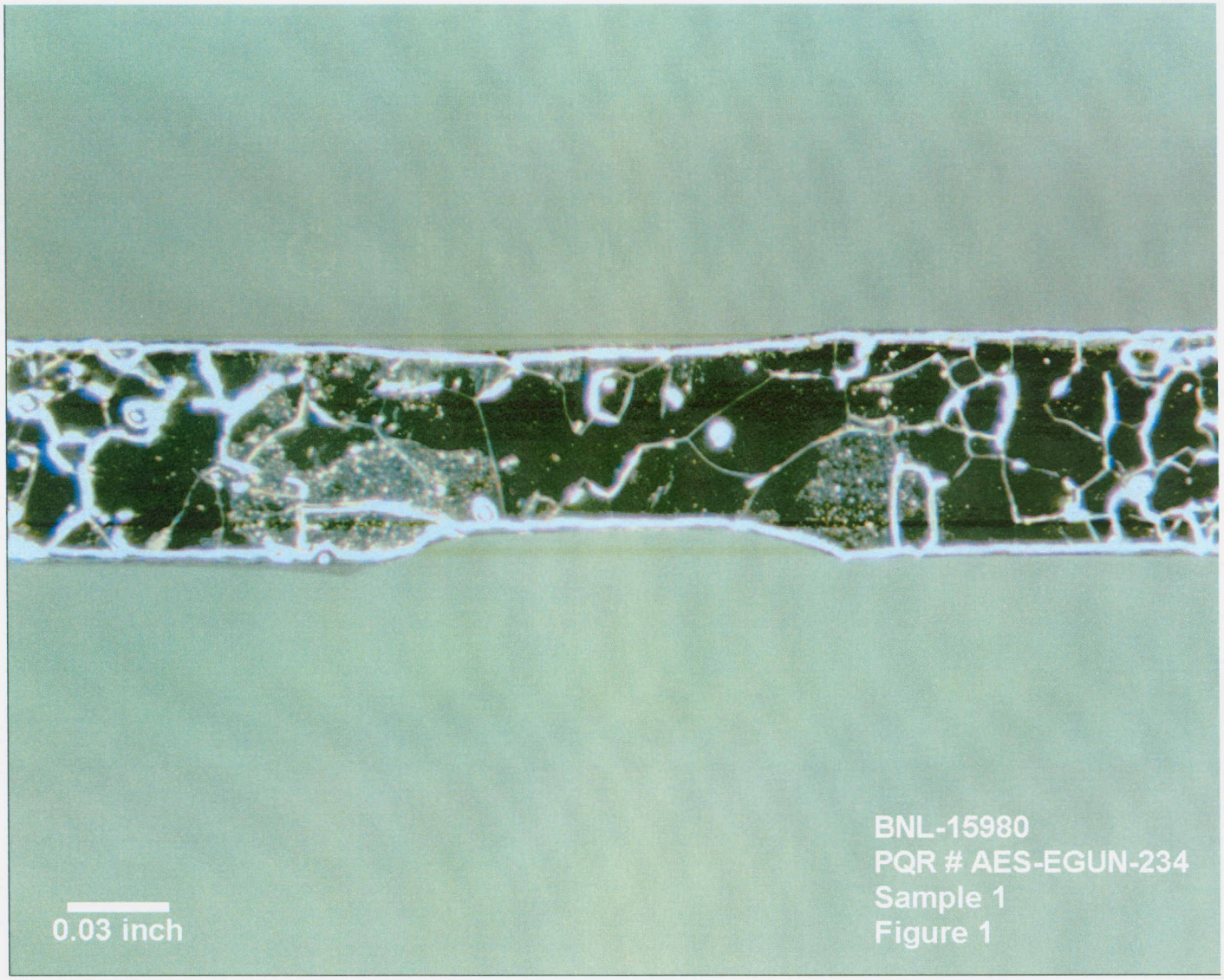

FIGURE 1

LABORATORY TESTING INC.
2331 Topaz Drive, Hatfield, PA 19440
Phone: 800-219-9095 • Fax: 800-219-9096

Certified Test Report

BNL001-09-05-15980-1

Accredited Nadcap™
Materials Testing Laboratory
Nondestructive Testing

PHOTOGRAPHIC SUBMITTAL

FIGURE 2

Electron Beam Welding Data Sheet

WO/ST No.: 001601	Seq. No. 236
Operation No.: 5 &6	Sheet 1 of 1

Customer: Brookhaven National Lab.	Vendor used for welding: Advanced Energy Systems, Inc.
Date: 2/10/2009 | Charge Number:1292GC001-01	Machine Type: Electron Beam welder
Program Number: O345	Machine Serial Number: 636
Part Name: Tension Test	Gun Type: BK 1.4 mm fil. V-Style Ribbon
Part Number:1242T00102-5 | Rev.N/A | Qty. 1	Operator: Ted Matos
Serial Number: N/A	**Weld Description**
Sketch:	Specification Number: WPS-N-1-08
	Material 1: niobium .118 thick
	Material 2: niobium .118 thick
	Weld Type: Full pen. with cosmetic pass
	Joint Type: interlock
	Joint Thickness: .121
	Tooling
	Fixture Type: test piece holder
	Fixture Angle: 13 degree
	Weld Cycle Data
	Vacuum Level: 2.4 x 10-5
	Ramp Up: N/A
	Over Lap: N/A
	Fade Out: N/A
	Cool down time in vacuum:30 min.
	Back fill time to 20 Torr: 22 min.
	Cool down time at 20 Torr: 15 min.
	Temperature at atmosphere: 99.0

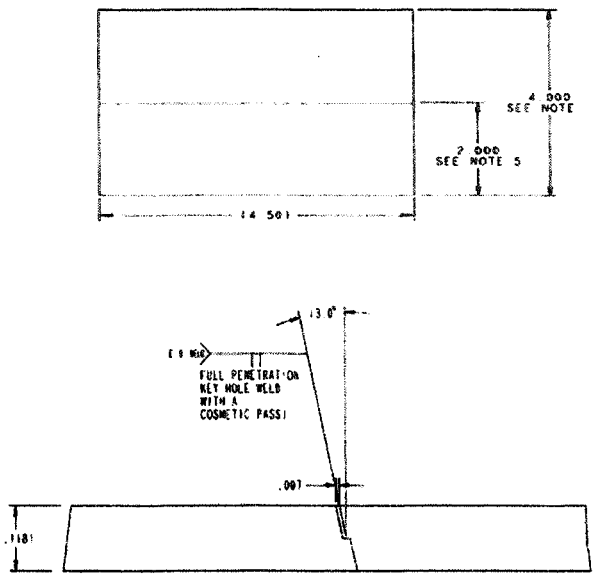

Penetration Requirements:	%	Depth (Inches)	Length
Spot Tack Weld			N/A
Stitch Tack Weld			
Seal Weld			N/A
Weld	100	.121	N/A
Cosmetic Weld			N/A

Weld Type	Beam kV	Beam mA	Frequency Hz	Amplitude (X / Y)	Spot Size Inches	Welding Speed IN / MIN	Welding Speed SEC / REV	Defocus	Gun to work Distance
Tack Weld	100	7	1000	X=.003 Y=.003	X=.003 Y=.003	18	N/A	-1/2 "	11
Weld Pass	100	18	1000	X=.3 Y=.3	X=.009 Y=.009	18	N/A	-1/2 " (570)	11
Cosmetic Pass	100	18	1000	X=.3 Y=.3	X= .009 Y=.009	18	N/A	+4" (610)	11
				X= Y=	X= Y=				

Comments: Parts were weld with no .007 offset, The fade out seemed to be slightly on edge of joint. Sectioned, Etched and the whole joint was consumed by the weld.
"No fit up gap, No filler material and No Pre-heat of parts required"

Certified Test Report

LABORATORY TESTING INC.
2331 Topaz Drive, Hatfield, PA 19440
Phone: 800-219-9095 • Fax: 800-219-9096

BNL001-09-05-15980-2

Accredited Nadcap™
Materials Testing Laboratory
Nondestructive Testing

SOLD TO
Brookhaven National Laboratory
Collider-Accelerator Dept.
Building 911A
Upton, NY 11973-5000

SHIP TO
Brookhaven National Laboratory
Collider-Accelerator Dept.
Building 911A
Upton, NY 11973-5000
ATTN: G. T. McIntyre

CUSTOMER P.O.	CERTIFICATION DATE	SHIP VIA
BNL-0000148742	6/18/2009	EMAIL & UPS

DESCRIPTION

Quantity:	1
Size:	4" x 4 1/2"
PO Line Item No.:	1 & 2
Drawing No.:	1242T00 102
Weld Type:	Angle Interlocking Butt
Weld Thicknesses:	0.118 / 0.118
Weld Angle from Norm:	13 Degrees
Material Types:	RRR / RRR
PQR No. (AES-Seq. No):	AES- EGUN-236
Material:	Niobium

TENSILE TEST:

APPLICABLE SPECIFICATIONS: **ASME BPVC, SECTION IX, 2007 EDITION, 2008a ADDENDA**

	Specimen #1	Specimen #2	Specimen #3
Size (Inches)	0.2480 x 0.1010	0.2460 x 0.1000	0.2470 x 0.1025
Area (Square Inches)	0.0250	0.0246	0.0253
Tensile Load (Pounds)	583.50	566.00	610.50
Tensile Strength (KSI)	23.3	23.0	24.1
Yield Load (.2%) (Pounds)	229.5	232.00	263.24
Yield Strength (.2%) (KSI)	9.2	9.4	10.4
Elongation (In 2") (%)	38	35	38
Failure Location	Weld Area	Weld Area	Weld Area
Mode of Fracture	Ductile	Ductile	Ductile

LABORATORY TESTING INC.
2331 Topaz Drive, Hatfield, PA 19440
Phone: 800-219-9095 ◆ Fax: 800-219-9096

Certified Test Report

BNL001-09-05-15980-2

Accredited Nadcap™
Materials Testing Laboratory
Nondestructive Testing

A Macro Examination was performed on (2) pieces of the submitted Test Specimens in accordance with Customer Instructions with the following results:

ACTUAL: The samples were sectioned, ground, and etched in accordance with LTI Procedure Numbers 90-MACRO-1, Rev. 2, Dated 11/2/06 and 90-MICRO-1, Rev. 6, Dated 6/18/01.

Representative photographs revealed that the general macrostructure of the materials exhibited no evidence of cracking, excessive amounts of inclusions or significant porosity as shown in Figures 3 and 4.

The services performed above were done in accordance with LTI's Quality System Program Manual Revision 18 dated 7/27/07 and ISO/IEC 17025. These results relate only to the items tested and this report shall not be reproduced, except in full, without the written approval of Laboratory Testing, Inc. L.T.I. is accredited by PRI to ISO17025 and by Nadcap for NDT and Materials Testing for the test methods and specific services as listed in the Scopes of Accreditation available at www.labtesting.com and www.eAuditNet.com. The results reported on this test report represent the actual attributes of the material tested and indicate full compliance with all applicable specification and contract requirements.

MERCURY CONTAMINATION: During the testing and inspection, the product did not come in direct contact with mercury or any of its compounds nor with any mercury containing devices employing a single boundary of containment.

NOTE: The recording of false, fictitious or fraudulent statements or entries on this document may be punishable as a felony under Federal Statutes.

Sherri L. Scheifele
QA Specialist

Sherri L Scheifele

By: _____
Authorized Signature

LABORATORY TESTING INC.
2331 Topaz Drive, Hatfield, PA 19440
Phone: 800-219-9095 ◆ Fax: 800-219-9096

Certified Test Report

BNL001-09-05-15980-2

Accredited Nadcap™
Materials Testing Laboratory
Nondestructive Testing

PHOTOGRAPHIC SUBMITTAL

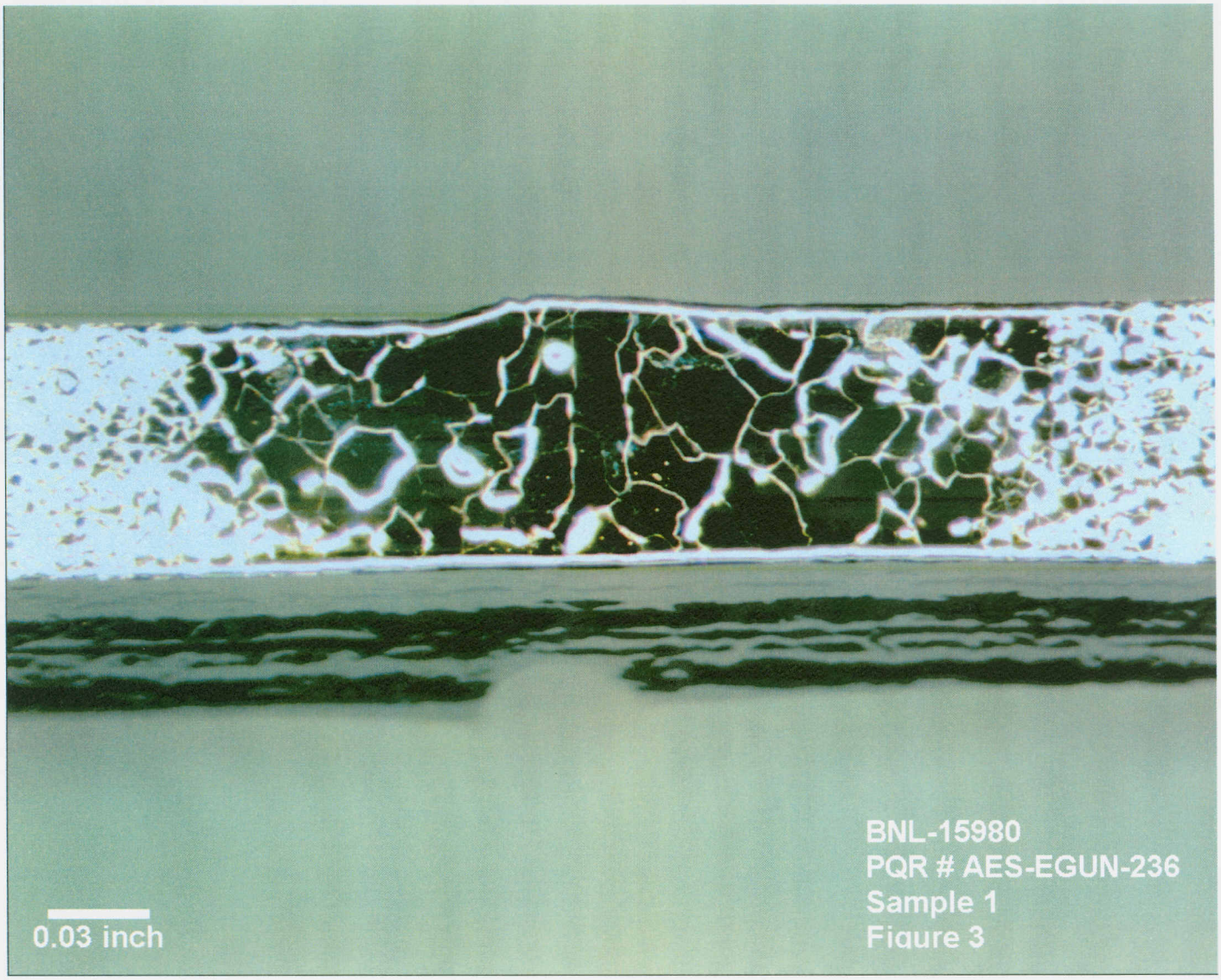

FIGURE 3

LABORATORY TESTING INC.
2331 Topaz Drive, Hatfield, PA 19440
Phone: 800-219-9095 ◆ Fax: 800-219-9096

Certified Test Report

BNL001-09-05-15980-2

Accredited Nadcap™
Materials Testing Laboratory
Nondestructive Testing

PHOTOGRAPHIC SUBMITTAL

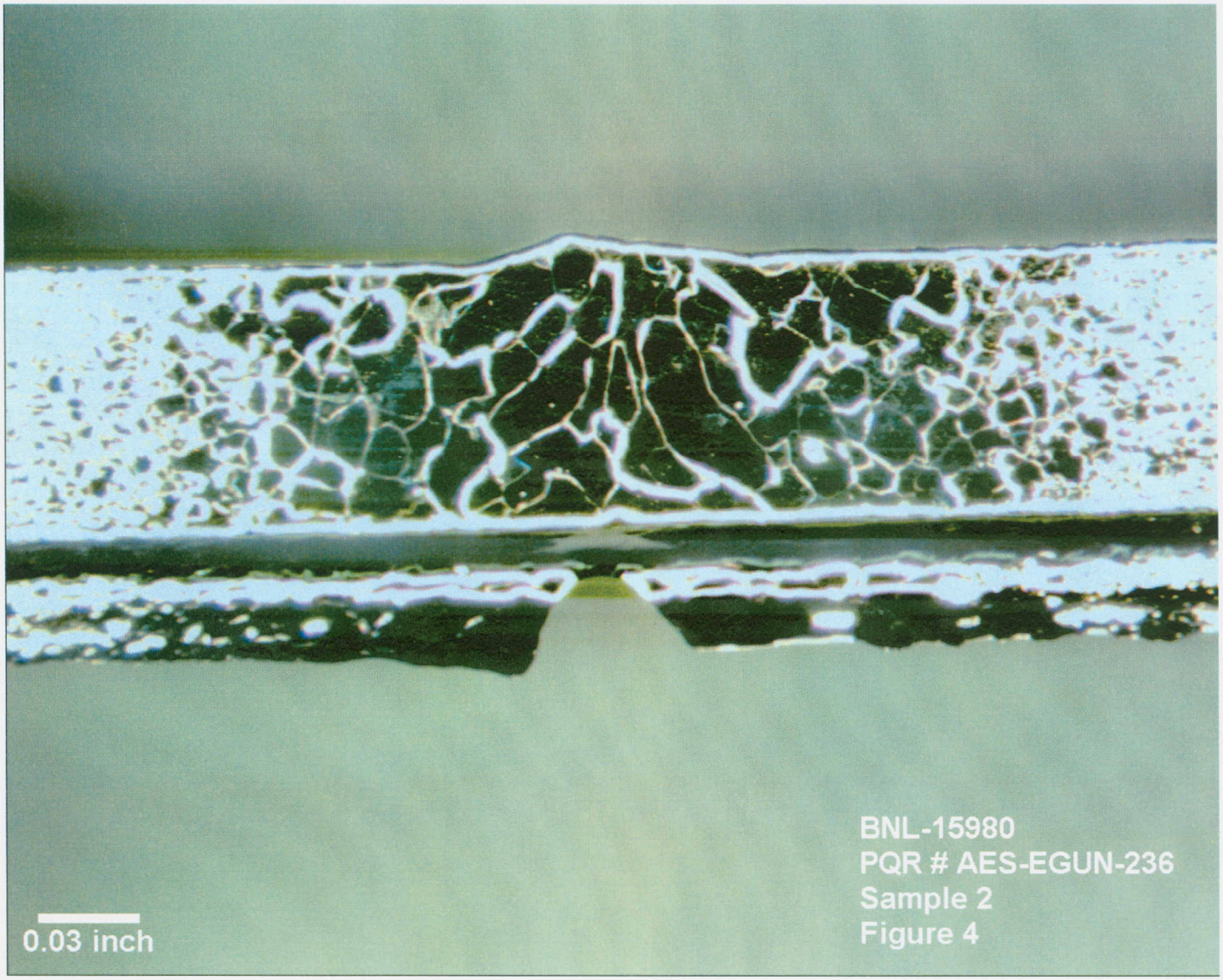

FIGURE 4

Electron Beam Welding Data Sheet

WO/ST No.: 001602	Seq. No. 241
Operation No.: 6&7	Sheet 1 of 1

Customer: Brookhaven National Lab.	Vendor used for welding: Advance Energy Systems inc.
Date: 2/17/2009 | Charge Number: GC1292-001	Machine Type: Electron Beam Welder
Program Number: 0345	Machine Serial Number: 636
Part Name: Tension specimen plate	Gun Type: BK 1.4 mm fil. V-Style Ribbon
Part Number:1242T00103-5 | Rev.n/a | Qty. 1	Operator: Ted Matos
Serial Number: N/A	**Weld Description**
Sketch: thickness .253	Specification Number: WPS-N-108
	Material 1: Niobium .253 thick
	Material 2: Niobium .253 thick
	Weld Type: full pen. with cosmetic pass
	Joint Type: interlock
	Joint Thickness: .253
	Tooling
	Fixture Type: test piece holder
	Fixture Angle: 0 degree
	Weld Cycle Data
	Vacuum Level: 2.0 x 10-5
	Ramp Up: N/A
	Over Lap: N/A
	Fade Out: N/A
	Cool down time in vacuum: 30min.
	Back fill time to 20 Torr: 22 min.
	Cool down time at 20 Torr: 15 min.
	Temperature at atmosphere: 99.0

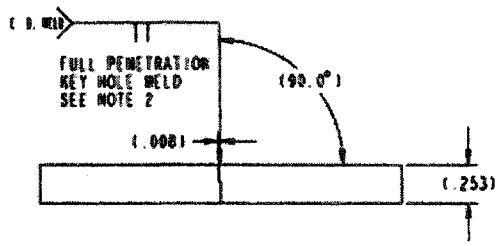

Align cross hairs .008 off joint

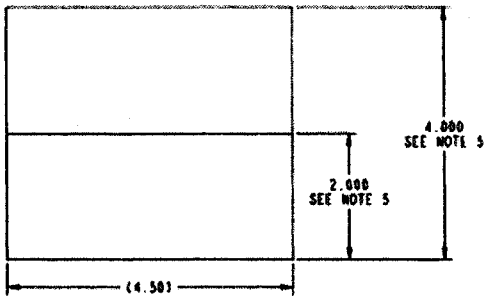

Penetration Requirements:	%	Depth (Inches)	Length
Spot Tack Weld			N/A
Stitch Tack Weld			
Seal Weld			N/A
Weld	100	.253	N/A
Cosmetic Weld			N/A

Weld Type	Beam kV	Beam mA	Frequency Hz	Amplitude (X / Y)	Spot Size Inches	Welding Speed IN / MIN	Welding Speed SEC / REV	Defocus	Gun to work Distance
Tack Weld	100	7	1000	X=2.5 Y= 2.5	X=.034 Y=.034	18	N/A	- ½"	11"
Weld Pass	100	47	1000	X=2.5 Y=2.5	X=.034 Y=.034	18	N/A	-1/2" (570)	11"
Cosmetic Pass	100	37	1000	X=2.5 Y=2.5	X= .034 Y=.034	18	N/A	+4 (610)	11"
				X= Y=	X= Y=				

Comments: "No fit up gap, No filler material and No Pre-heat of parts required" Visual inspection good.

Certified Test Report

LABORATORY TESTING INC.
2331 Topaz Drive, Hatfield, PA 19440
Phone: 800-219-9095 • Fax: 800-219-9096

BNL001-09-05-15980-3

Accredited Nadcap™
Materials Testing Laboratory
Nondestructive Testing

SOLD TO
Brookhaven National Laboratory
Collider-Accelerator Dept.
Building 911A
Upton, NY 11973-5000

SHIP TO
Brookhaven National Laboratory
Collider-Accelerator Dept.
Building 911A
Upton, NY 11973-5000
ATTN: G. T. McIntyre

CUSTOMER P.O.
BNL-0000148742

CERTIFICATION DATE
6/18/2009

SHIP VIA
EMAIL & UPS

DESCRIPTION

Quantity:	1
Size:	4" x 4 1/2"
PO Line Item No.:	1 & 2
Drawing No.:	1242T00 103
Weld Type:	Interlocking Butt
Weld Thicknesses:	0.253 / 0.253
Weld Angle from Norm:	N/A
Material Types:	RRR / RRR
PQR No. (AES-Seq. No):	AES- EGUN-241
Material:	Niobium

TENSILE TEST:

APPLICABLE SPECIFICATIONS: **ASME BPVC, SECTION IX, 2007 EDITION, 2008a ADDENDA**

	Specimen #1	Specimen #2	Specimen #3
Size (Inches)	0.2480 x 0.2550	0.2475 x 0.2500	0.2455 x 0.2495
Area (Square Inches)	0.0632	0.0619	0.0613
Tensile Load (Pounds)	1,377.50	1,312.50	1,257.50
Tensile Strength (KSI)	21.8	21.2	20.5
Yield Load (.2%) (Pounds)	602.50	490.00	492.50
Yield Strength (.2%) (KSI)	9.5	7.9	8.0
Elongation (In 2") (%)	47	45	50
Failure Location	Weld Area	Weld Area	Weld Area
Mode of Fracture	Ductile	Ductile	Ductile

LABORATORY TESTING INC.
2331 Topaz Drive, Hatfield, PA 19440
Phone: 800-219-9095 • Fax: 800-219-9096

Certified Test Report

BNL001-09-05-15980-3

Accredited Nadcap™
Materials Testing Laboratory
Nondestructive Testing

A Macro Examination was performed on (2) pieces of the submitted Test Specimens in accordance with Customer Instructions with the following results:

ACTUAL: The samples were sectioned, ground, and etched in accordance with LTI Procedure Numbers 90-MACRO-1, Rev. 2, Dated 11/2/06 and 90-MICRO-1, Rev. 6, Dated 6/18/01.

Representative photographs revealed that the general macrostructure of the materials exhibited no evidence of cracking, excessive amounts of inclusions or significant porosity as shown in Figures 5 and 6.

The services performed above were done in accordance with LTI's Quality System Program Manual Revision 18 dated 7/27/07 and ISO/IEC 17025. These results relate only to the items tested and this report shall not be reproduced, except in full, without the written approval of Laboratory Testing, Inc. L.T.I. is accredited by PRI to ISO17025 and by Nadcap for NDT and Materials Testing for the test methods and specific services as listed in the Scopes of Accreditation available at www.labtesting.com and www.eAuditNet.com. The results reported on this test report represent the actual attributes of the material tested and indicate full compliance with all applicable specification and contract requirements.

MERCURY CONTAMINATION: During the testing and inspection, the product did not come in direct contact with mercury or any of its compounds nor with any mercury containing devices employing a single boundary of containment.

NOTE: The recording of false, fictitious or fraudulent statements or entries on this document may be punishable as a felony under Federal Statutes.

Sherri L. Scheifele
QA Specialist

Sherri L Scheifele

By: _____
Authorized Signature

LABORATORY TESTING INC.
2331 Topaz Drive, Hatfield, PA 19440
Phone: 800-219-9095 • Fax: 800-219-9096

Certified Test Report

BNL001-09-05-15980-3

Accredited Nadcap™
Materials Testing Laboratory
Nondestructive Testing

PHOTOGRAPHIC SUBMITTAL

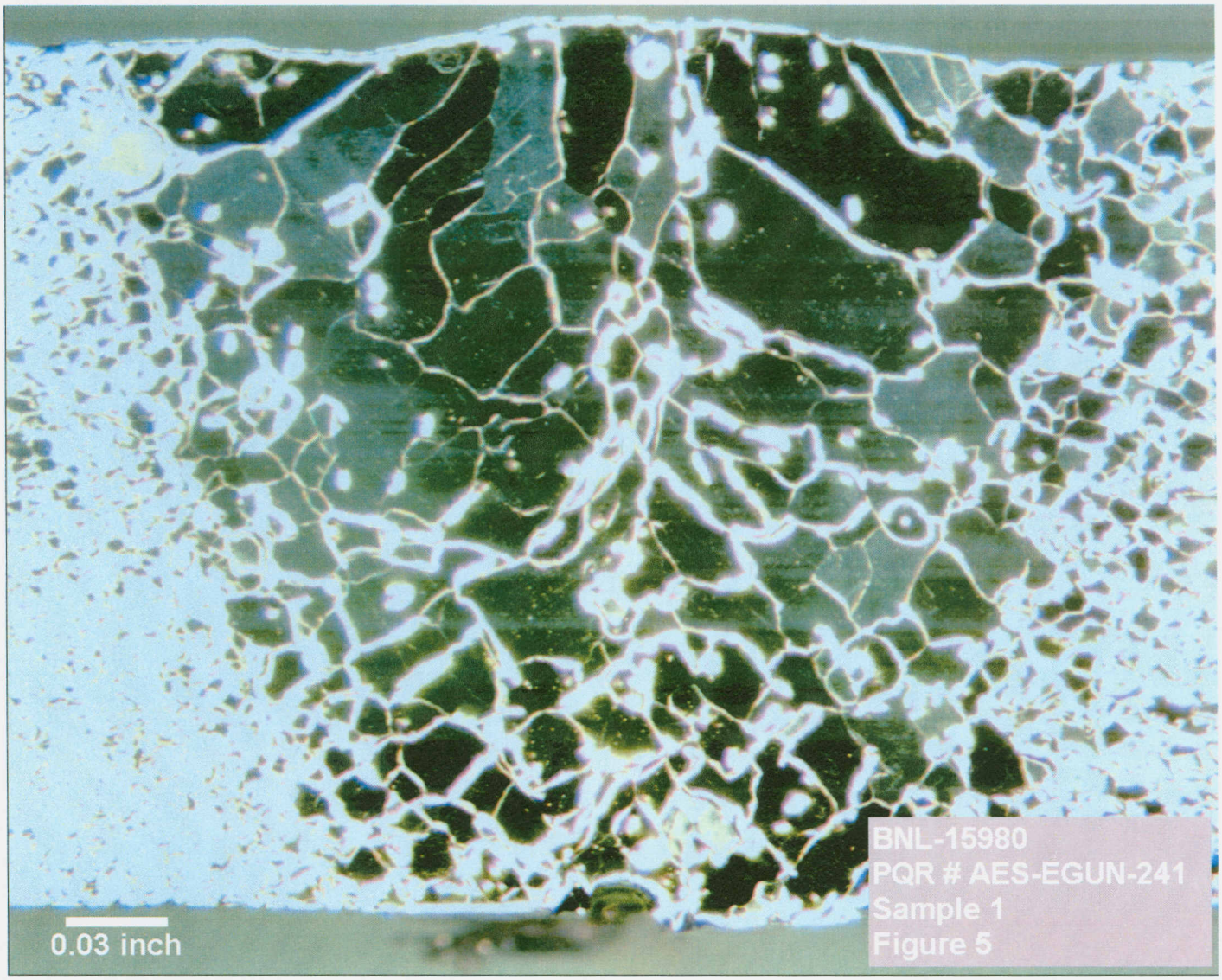

FIGURE 5

LABORATORY TESTING INC.
2331 Topaz Drive, Hatfield, PA 19440
Phone: 800-219-9095 ◆ Fax: 800-219-9096

Certified Test Report

BNL001-09-05-15980-3

Accredited Nadcap™
Materials Testing Laboratory
Nondestructive Testing

PHOTOGRAPHIC SUBMITTAL

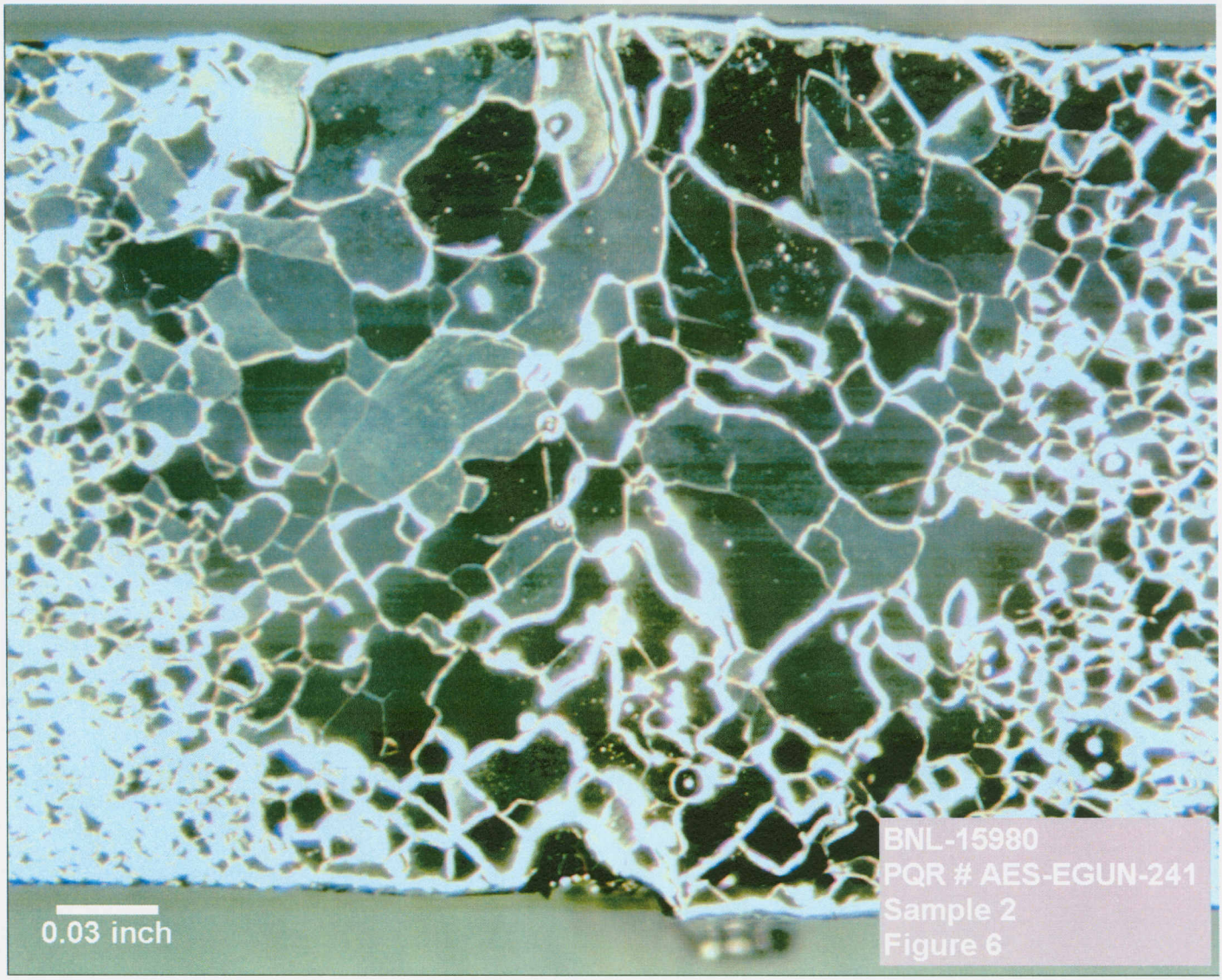

FIGURE 6

Electron Beam Welding Data Sheet

WO/ST No.: 001603	Seq. No. 256
Operation No.: 6 & 7	Sheet 1 of 1

Customer: Brookhaven National Lab.		
Date: 3/11/2009	Charge Number: GC1292-001	
Program Number: o345		
Part Name: Tension Specimen		
Part Number:1242T00104-5	Rev. A	Qty. 1
Serial Number: N/A		

Sketch:

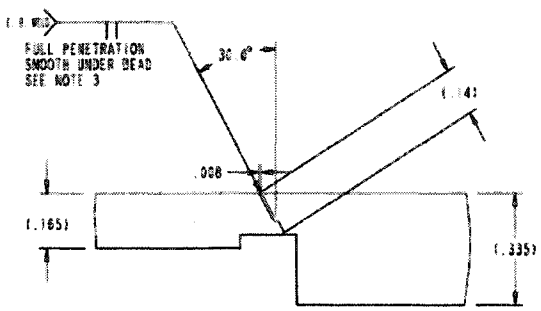

Vendor used for welding: Advanced Energy Systems, Inc.
Machine Type: Electron Beam Welder
Machine Serial Number: 636
Gun Type: BK1.4: 1.4 mm FILA. V-STYLE
Operator: Ted Matos
Weld Description
Specification Number: WPS-N-1-08
Material 1: niobium .335 thick
Material 2: niobium .165 thick
Weld Type: full penetration with smooth underbead
Joint Type: angle interlocking butt
Joint Thickness: .140
Tooling
Fixture Type: test plate holder
Fixture Angle: 30 degree angle
Weld Cycle Data
Vacuum Level: 3 x10-5
Ramp Up: N/A
Over Lap: N/A
Fade Out: N/A
Cool down time in vacuum: 40 min.
Back fill time to 20 Torr: N/A
Cool down time at 20 Torr: N/A
Temperature at atmosphere: 105.0

Penetration Requirements:	%	Depth (Inches)	Length
Spot Tack Weld			N/A
Stitch Tack Weld			N/A
Seal Weld			N/A
Weld	100 %	.140	N/A
Cosmetic Weld			N/A

Weld Type	Beam KV	Beam MA	Frequency Hz	Amplitude (X / Y)	Spot Size Inches	Welding Speed IN / MIN	Welding Speed SEC / REV	Defocus	Gun to work Distance
Tack Weld	100	3	1000	X=5.0 Y=5.0	X= .045 Y= .045	18	n/a	-4	11
Seal Weld	100	40	1000	X=5.0 Y=5.0	X= .045 Y= .045	18	n/a	-4	11
Weld	100	45	1000	X=5.0 Y=5.0	X= .045 Y= .045	18	n/a	-4 (555)	11
Cosmetic Weld				X= Y=	X= Y=				

Comments: "No fit up gap, No filler material and No Pre-heat of parts required" Surface had a positive crown And melt through was consistent through the whole part.

Certified Test Report

LABORATORY TESTING INC.
2331 Topaz Drive, Hatfield, PA 19440
Phone: 800-219-9095 • Fax: 800-219-9096

BNL001-09-05-15980-4

Accredited Nadcap™
Materials Testing Laboratory
Nondestructive Testing

SOLD TO
Brookhaven National Laboratory
Collider-Accelerator Dept.
Building 911A
Upton, NY 11973-5000

SHIP TO
Brookhaven National Laboratory
Collider-Accelerator Dept.
Building 911A
Upton, NY 11973-5000
ATTN: G. T. McIntyre

CUSTOMER P.O.
BNL-0000148742

CERTIFICATION DATE
6/18/2009

SHIP VIA
EMAIL & UPS

DESCRIPTION

Quantity:	1
Size:	4" x 4 1/2"
PO Line Item No.:	1 & 2
Drawing No.:	1242T00 104
Weld Type:	Angle Interlocking Butt
Weld Thicknesses:	0.165 / 0.335
Weld Angle from Norm:	30 Degrees
Material Types:	RRR / RRR
PQR No. (AES-Seq. No):	AES- EGUN-256
Material:	Niobium

TENSILE TEST:

APPLICABLE SPECIFICATIONS: **ASME BPVC, SECTION IX, 2007 EDITION, 2008a ADDENDA**

	Specimen #1	Specimen #2	Specimen #3
Size (Inches)	0.2475 x 0.1104	0.2470 x 0.1093	0.2480 x 0.1136
Area (Square Inches)	0.0273	0.0270	0.0282
Tensile Load (Pounds)	522.00	494.00	585.50
Tensile Strength (KSI)	19.1	18.3	20.8
Yield Load (.2%) (Pounds)	251.03	249.00	289.00
Yield Strength (.2%) (KSI)	9.2	9.2	10.3
Elongation (In 2") (%)	33	30	34
Failure Location	Weld Area	Weld Area	Weld Area
Mode of Fracture	Ductile	Ductile	Ductile

LABORATORY TESTING INC.
2331 Topaz Drive, Hatfield, PA 19440
Phone: 800-219-9095 • Fax: 800-219-9096

Certified Test Report

BNL001-09-05-15980-4

Accredited Nadcap™
Materials Testing Laboratory
Nondestructive Testing

A Macro Examination was performed on (2) pieces of the submitted Test Specimens in accordance with Customer Instructions with the following results:

ACTUAL: The samples were sectioned, ground, and etched in accordance with LTI Procedure Numbers 90-MACRO-1, Rev. 2, Dated 11/2/06 and 90-MICRO-1, Rev. 6, Dated 6/18/01.

Representative photographs revealed that the general macrostructure of the materials exhibited no evidence of cracking, excessive amounts of inclusions or significant porosity as shown in Figures 7 and 8.

The services performed above were done in accordance with LTI's Quality System Program Manual Revision 18 dated 7/27/07 and ISO/IEC 17025. These results relate only to the items tested and this report shall not be reproduced, except in full, without the written approval of Laboratory Testing, Inc. L.T.I. is accredited by PRI to ISO17025 and by Nadcap for NDT and Materials Testing for the test methods and specific services as listed in the Scopes of Accreditation available at www.labtesting.com and www.eAuditNet.com. The results reported on this test report represent the actual attributes of the material tested and indicate full compliance with all applicable specification and contract requirements.

MERCURY CONTAMINATION: During the testing and inspection, the product did not come in direct contact with mercury or any of its compounds nor with any mercury containing devices employing a single boundary of containment.

NOTE: The recording of false, fictitious or fraudulent statements or entries on this document may be punishable as a felony under Federal Statutes.

Sherri L. Scheifele
QA Specialist

Sherri L Scheifele

By: _____
Authorized Signature

LABORATORY TESTING INC.
2331 Topaz Drive, Hatfield, PA 19440
Phone: 800-219-9095 ◆ Fax: 800-219-9096

Certified Test Report

BNL001-09-05-15980-4

Accredited Nadcap™
Materials Testing Laboratory
Nondestructive Testing

PHOTOGRAPHIC SUBMITTAL

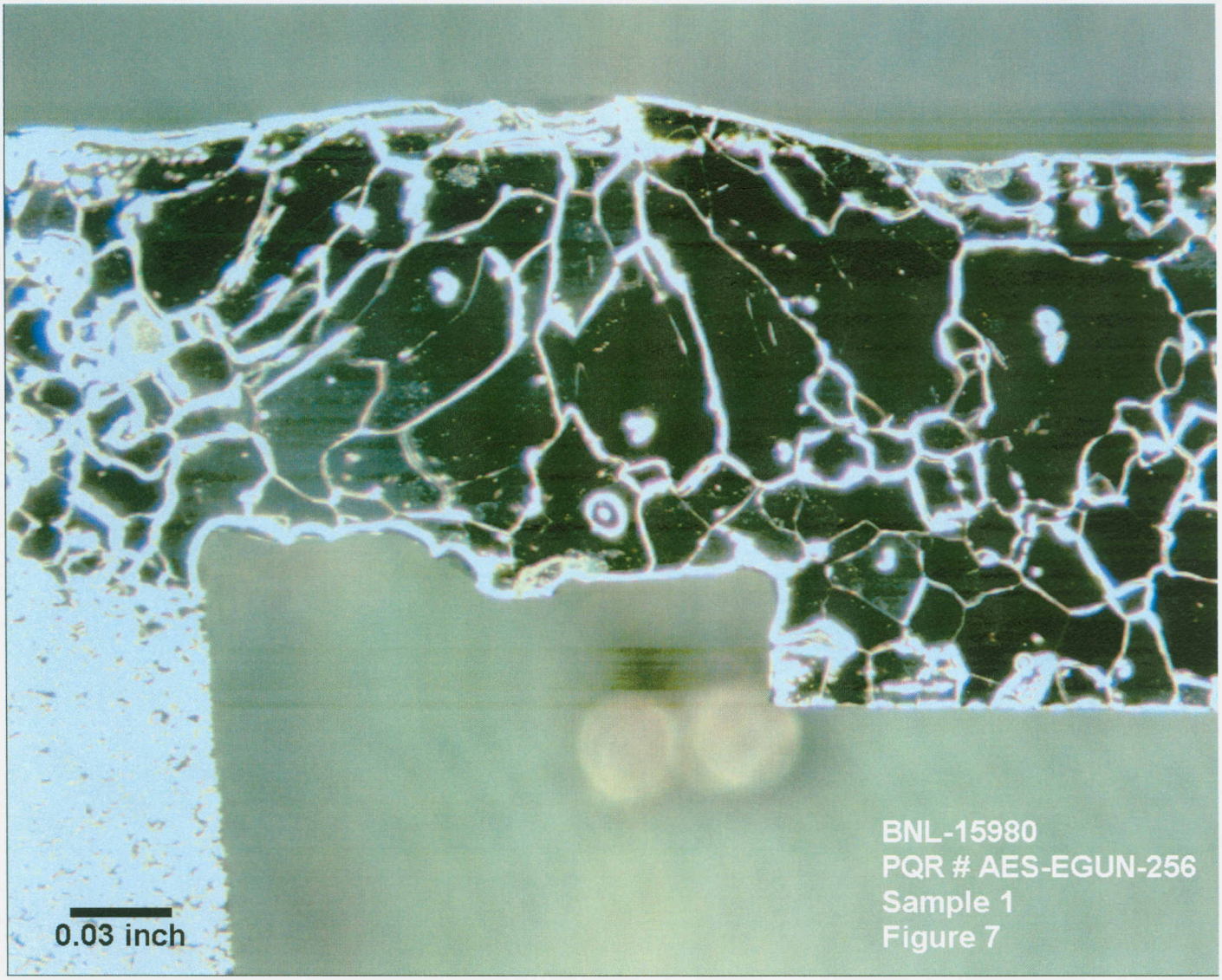

FIGURE 7

LABORATORY TESTING INC.
2331 Topaz Drive, Hatfield, PA 19440
Phone: 800-219-9095 ◆ Fax: 800-219-9096

Certified Test Report

BNL001-09-05-15980-4

Accredited Nadcap™
Materials Testing Laboratory
Nondestructive Testing

PHOTOGRAPHIC SUBMITTAL

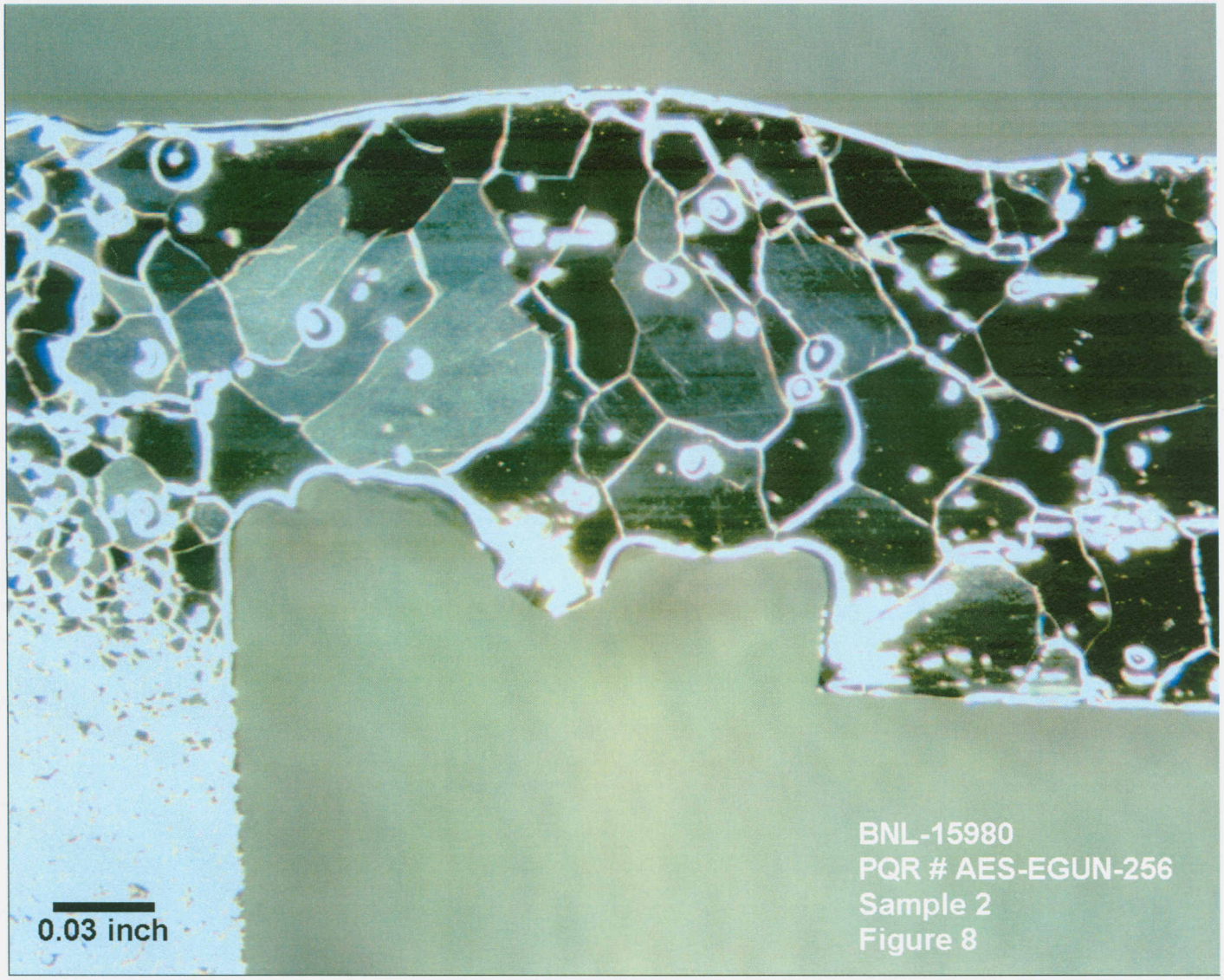

FIGURE 8

Electron Beam Welding Data Sheet

WO/ST No.: 001604	Seq. No. 245-1
Operation No.: 5 & 6	Sheet 1 of 2

Customer: Brookhaven National Lab.	Vendor used for welding: Advanced Energy Systems, Inc.
Date: 3/4/2009 / Charge Number: GC1292	Machine Type: Electron Beam Welder
Program Number: O345	Machine Serial Number:636
Part Name: Tension Specimen	Gun Type: BK 1.4 mm fil. V-style ribbon
Part Number:1292G000106-5 / Rev. / Qty. 1	Operator: Ted Matos
Serial Number: N/A	**Weld Description**
Sketch: op #1	Specification Number: WPS-N-1-08
	Material 1: Niobium .157
	Material 2: Niobium .157
	Weld Type: Keyhole weld
	Joint Type: Interlocking Butt
	Joint Thickness: .157
	Tooling
	Fixture Type: test piece holder
	Fixture Angle: o degrees
	Weld Cycle Data
	Vacuum Level:
	Ramp Up: N/A
	Over Lap: N/A
	Fade Out: N/A
	Cool down time in vacuum: 30 MIN.
	Back fill time to 20 Torr : 22 min.
	Cool down time at 20 Torr : 15 min.
	Temperature at atmosphere: 88.0

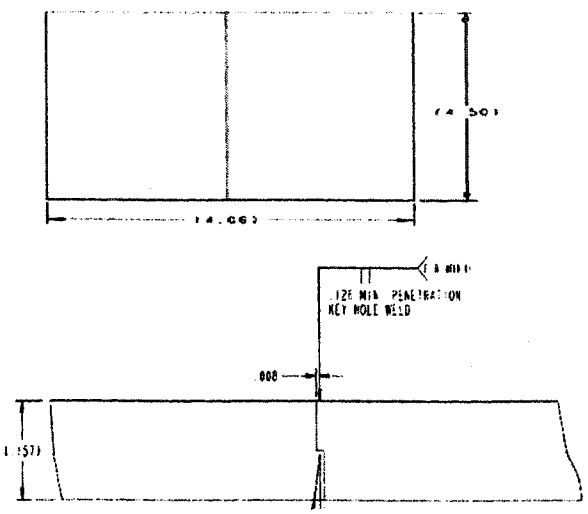

Penetration Requirements:	%	Depth (Inches)	Length
Spot Tack Weld			N/A
Stitch Tack Weld			
Seal Weld			N/A
Weld	80	.134(min.)	N/A
Cosmetic Weld			N/A

Weld Type	Beam KV	Beam MA	Frequency Hz	Amplitude (X / Y)	Spot Size Inches	Welding Speed IN / MIN	Welding Speed SEC / REV	Defocus	Gun to work Distance
Tack Weld	100	7	1000	X=2.5 Y=2.5	X=.034 Y=.034	18	N/A	-1/2"	11"
Weld Pass	100	23	1000	X=2.5 Y=2.5	X= .034 Y= .034	18	N/A	-1/2" (570)	11"
"R F" Pass	N/A	N/A	N/A	X=N/A Y=N/A	X= N/A Y= N/A	N/A	N/A	N/A	N/A
				X= Y=	X= Y=				

Comments: Visual inspection good.

Electron Beam Welding Data Sheet

WO/ST No.: 001604	Seq. No. 245-2
Operation No.: 5 & 6	Sheet 2 of 2

Customer: Brookhaven National Lab.		
Date: 3/4/2009	Charge Number: GC1292	
Program Number: O345		
Part Name: Tension Specimen		
Part Number:1292G000106-5	Rev.	Qty. 1
Serial Number: N/A		

Sketch: 9 degrees op# 2

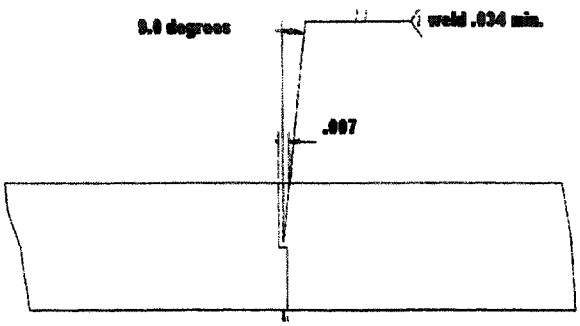

Vendor used for welding: Advanced Energy Systems, Inc.
Machine Type: Electron Beam Welder
Machine Serial Number:636
Gun Type: BK 1.4 mm fil. V-style ribbon
Operator: Ted Matos
Weld Description
Specification Number: WPS-N-1-08
Material 1:Niobium .157
Material 2: Niobium .157
Weld Type: Keyhole weld
Joint Type: interlocking angular
Joint Thickness: .157
Tooling
Fixture Type: test piece holder
Fixture Angle: 9. 0degree
Weld Cycle Data
Vacuum Level:
Ramp Up: N/A
Over Lap: N/A
Fade Out: N/A
Cool down time in vacuum: 60 min
Back fill time to 20 Torr: N/A
Cool down time at 20 Torr:Left under vac.
Temperature at atmosphere: overnight

Penetration Requirements:	%	Depth (Inches)	Length
Spot Tack Weld			N/A
Stitch Tack Weld			
Seal Weld			N/A
Weld	20	.034(min.)	N/A
Cosmetic Weld			N/A

Weld Type	Beam KV	Beam MA	Frequency Hz	Amplitude (X / Y)	Spot Size Inches	Welding Speed IN / MIN	Welding Speed SEC / REV	Defocus	Gun to work Distance
Tack Weld	N/A	N/A	N/A	N/A N/A	N/A N/A	N/A	N/A	N/A	N/A
Weld Pass	N/A	N/A	N/A	X=N/A Y=N/A	X= N/A Y= N/A	N/A	N/A	N/A	N/A
"R F" Pass	100	24	1000	X=3.5 Y=3.5	X= .040 Y=.040	18	N/A	+4 (610)	11
				X= Y=	X= Y=				

Comments: visual inspection good
Tension Z= 7.872

Certified Test Report

LABORATORY TESTING INC.
2331 Topaz Drive, Hatfield, PA 19440
Phone: 800-219-9095 ◆ Fax: 800-219-9096

BNL001-09-05-15980-5

Accredited Nadcap™
Materials Testing Laboratory
Nondestructive Testing

SOLD TO
Brookhaven National Laboratory
Collider-Accelerator Dept.
Building 911A
Upton, NY 11973-5000

SHIP TO
Brookhaven National Laboratory
Collider-Accelerator Dept.
Building 911A
Upton, NY 11973-5000
ATTN: G. T. McIntyre

CUSTOMER P.O.
BNL-0000148742

CERTIFICATION DATE
6/18/2009

SHIP VIA
EMAIL & UPS

DESCRIPTION

Quantity:	1
Size:	4" x 4 1/2"
PO Line Item No.:	1 & 2
Drawing No.:	1242T00 106
Weld Type:	Interlocking Butt
Weld Thicknesses:	0.157 / 0.157
Weld Angle from Norm:	N/A
Material Types:	RRR / RRR
PQR No. (AES-Seq. No):	AES- EGUN-245
Material:	Niobium

TENSILE TEST:

APPLICABLE SPECIFICATIONS: **ASME BPVC, SECTION IX, 2007 EDITION, 2008a ADDENDA**

	Specimen #1	Specimen #2	Specimen #3
Size (Inches)	0.2490 x 0.1409	0.2525 x 0.1472	0.2495 x 0.1424
Area (Square Inches)	0.0351	0.0372	0.0355
Tensile Load (Pounds)	786.00	832.00	813.00
Tensile Strength (KSI)	22.4	22.4	22.9
Yield Load (.2%) (Pounds)	337.00	377.35	369.00
Yield Strength (.2%) (KSI)	9.6	10.1	10.4
Elongation (In 2") (%)	44	41	42
Failure Location	Weld Area	Weld Area	Weld Area
Mode of Fracture	Ductile	Ductile	Ductile

LABORATORY TESTING INC.
2331 Topaz Drive, Hatfield, PA 19440
Phone: 800-219-9095 • Fax: 800-219-9096

Certified Test Report

BNL001-09-05-15980-5

Accredited Nadcap™
Materials Testing Laboratory
Nondestructive Testing

A Macro Examination was performed on (2) pieces of the submitted Test Specimens in accordance with Customer Instructions with the following results:

ACTUAL: The samples were sectioned, ground, and etched in accordance with LTI Procedure Numbers 90-MACRO-1, Rev. 2, Dated 11/2/06 and 90-MICRO-1, Rev. 6, Dated 6/18/01.

Representative photographs revealed that the general macrostructure of the materials exhibited no evidence of cracking, excessive amounts of inclusions or significant porosity as shown in Figures 9 and 10.

The services performed above were done in accordance with LTI's Quality System Program Manual Revision 18 dated 7/27/07 and ISO/IEC 17025. These results relate only to the items tested and this report shall not be reproduced, except in full, without the written approval of Laboratory Testing, Inc. L.T.I. is accredited by PRI to ISO17025 and by Nadcap for NDT and Materials Testing for the test methods and specific services as listed in the Scopes of Accreditation available at www.labtesting.com and www.eAuditNet.com. The results reported on this test report represent the actual attributes of the material tested and indicate full compliance with all applicable specification and contract requirements.

MERCURY CONTAMINATION: During the testing and inspection, the product did not come in direct contact with mercury or any of its compounds nor with any mercury containing devices employing a single boundary of containment.

NOTE: The recording of false, fictitious or fraudulent statements or entries on this document may be punishable as a felony under Federal Statutes.

Sherri L. Scheifele
QA Specialist

Sherri L. Scheifele

By: _____
Authorized Signature

LABORATORY TESTING INC.
2331 Topaz Drive, Hatfield, PA 19440
Phone: 800-219-9095 ◆ Fax: 800-219-9096

Certified Test Report

BNL001-09-05-15980-5

Accredited Nadcap™
Materials Testing Laboratory
Nondestructive Testing

PHOTOGRAPHIC SUBMITTAL

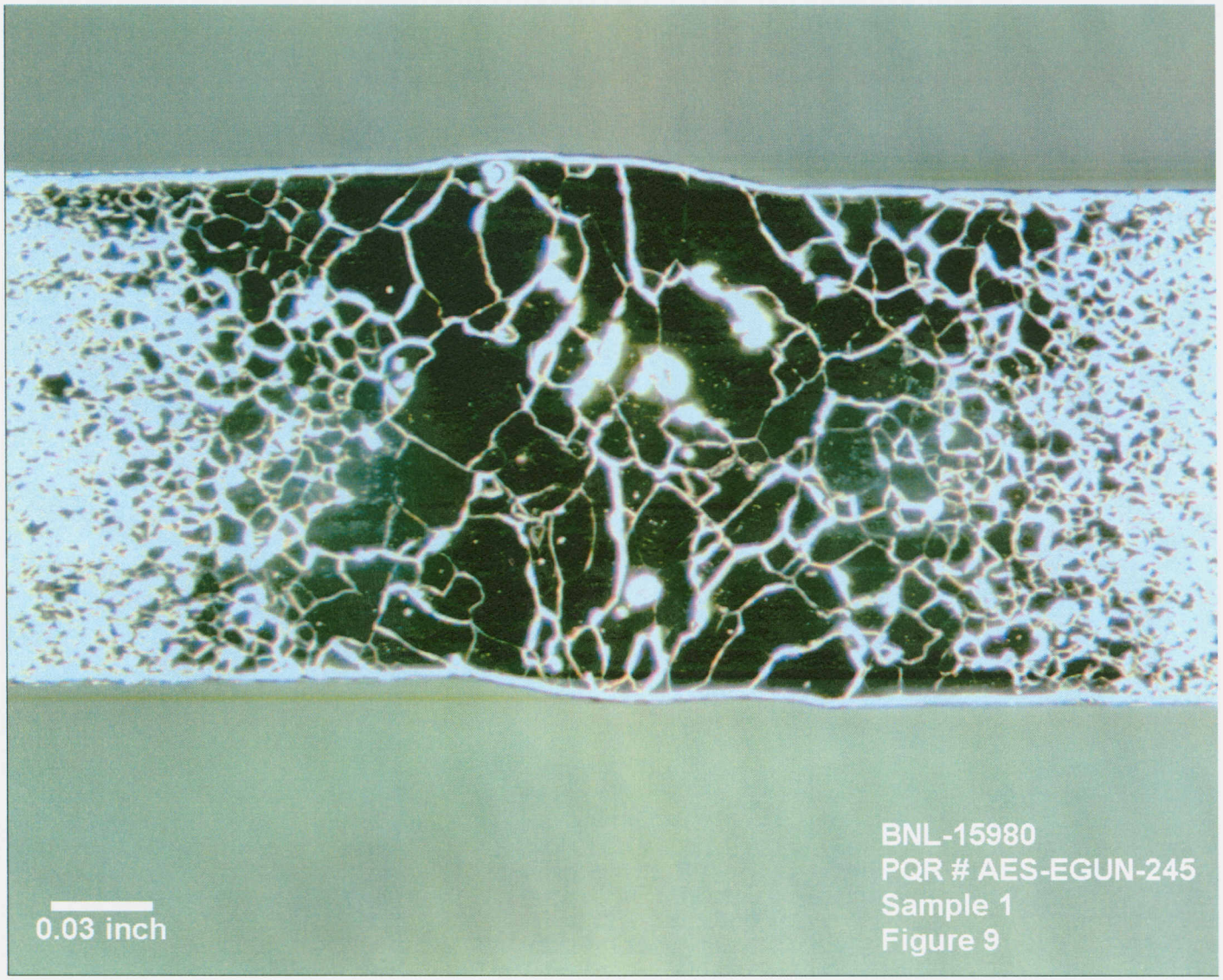

FIGURE 9

LABORATORY TESTING INC.
2331 Topaz Drive, Hatfield, PA 19440
Phone: 800-219-9095 ◆ Fax: 800-219-9096

Certified Test Report

BNL001-09-05-15980-5

Accredited Nadcap™
Materials Testing Laboratory
Nondestructive Testing

PHOTOGRAPHIC SUBMITTAL

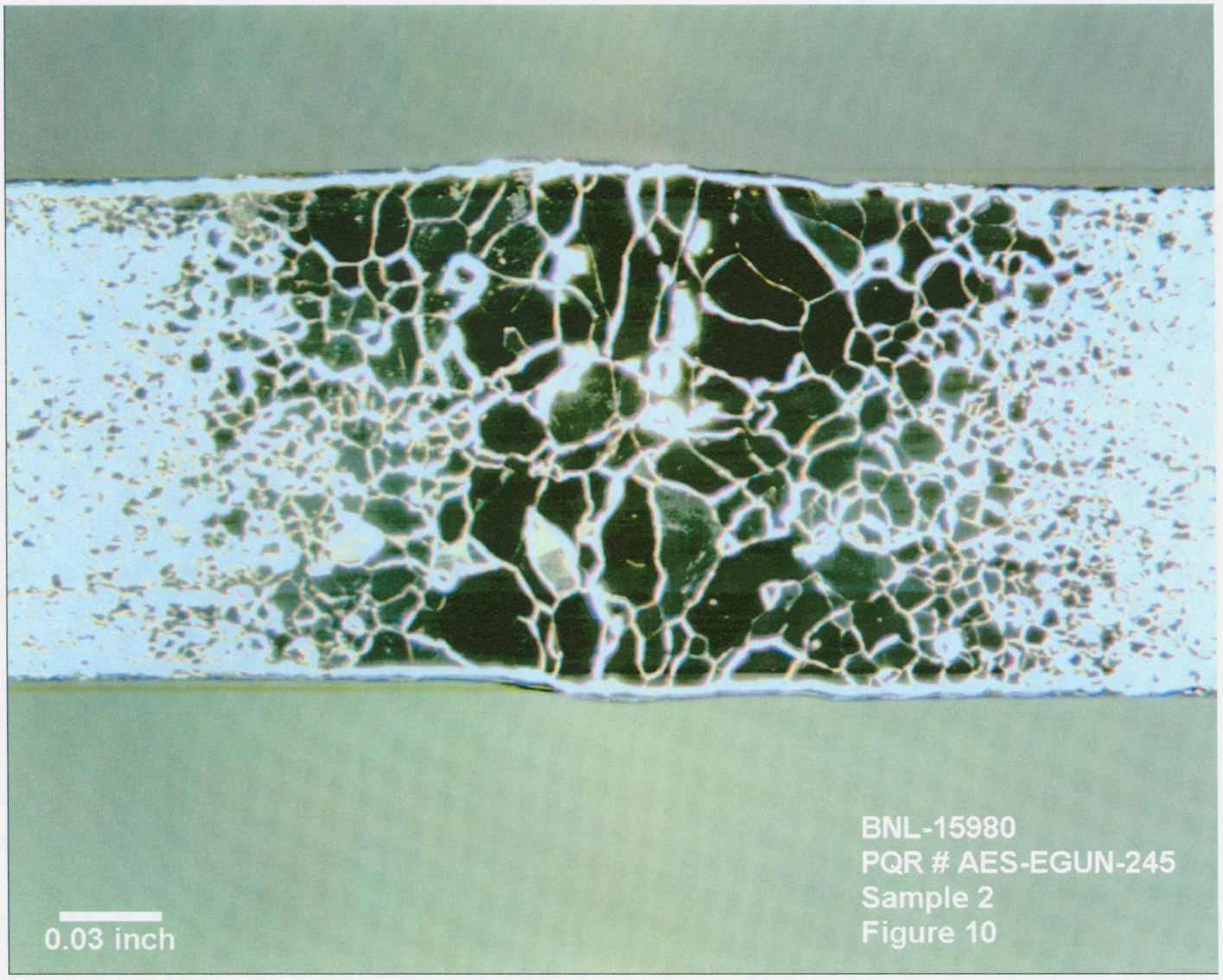

FIGURE 10

Electron Beam Welding Data Sheet

WO/ST No.: 001605	Seq. No. 242-1
Operation No.:	Sheet 1 of 2

Customer: Brookhaven National Lab.	Vendor used for welding: Advanced Energy Systems, Inc.
Date: 2/23/2009 / Charge Number: GC1292	Machine Type: Electron Beam Welder
Program Number: O345	Machine Serial Number:636
Part Name: Tension Specimen	Gun Type: BK 1.4 mm fil. V-style ribbon
Part Number:1292G000107-5 / Rev. / Qty. 1	Operator: Ted Matos
Serial Number: N/A	**Weld Description**
Sketch:	Specification Number: WPS-N-1-08
	Material 1: Niobium .157
	Material 2: Niobium .157
	Weld Type: Keyhole weld
	Joint Type: Interlocking angular
	Joint Thickness: .167
	Tooling
	Fixture Type: test piece holder
	Fixture Angle: 19. 5 degree
	Weld Cycle Data
	Vacuum Level: 3.0 x 10 -5
	Ramp Up: N/A
	Over Lap: N/A
	Fade Out: N/A
	Cool down time in vacuum: 30 MIN.
	Back fill time to 20 Torr: 22 MIN.
	Cool down time at 20 Torr: 15 MIN.
	Temperature at atmosphere: 95.0

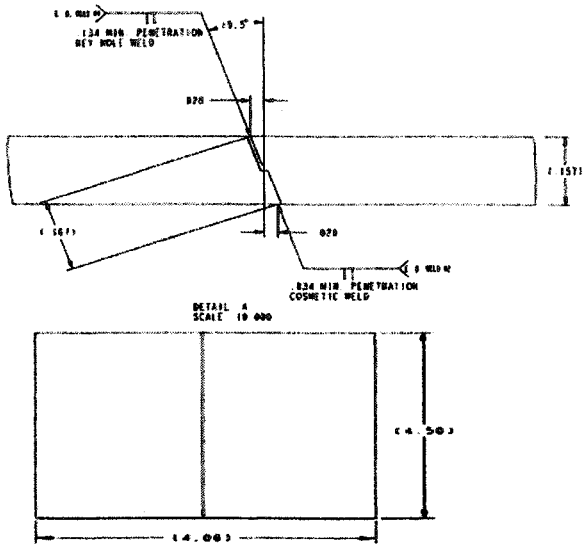

Penetration Requirements:	%	Depth (Inches)	Length
Spot Tack Weld			N/A
Stitch Tack Weld			
Seal Weld			N/A
Weld	80	.134(min.)	N/A
Cosmetic Weld			N/A

Weld Type	Beam KV	Beam MA	Frequency Hz	Amplitude (X / Y)	Spot Size Inches	Welding Speed IN / MIN	Welding Speed SEC / REV	Defocus	Gun to work Distance
Tack Weld	100	7	1000	X=2.5 Y=2.5	X=.034 Y=.034	18	N/A	-1/2"	11"
Weld Pass	100	25	1000	X=2.5 Y=2.5	X= .034 Y= .034	18	N/A	-1/2" (570)	11"
"R F" Pass	N/A	N/A	N/A	X=N/A Y=N/A	X= N/A Y= N/A	N/A	N/A	N/A	N/A
				X= Y=	X= Y=				

Comments: "No fit up gap, No filler material and No Pre-heat of parts required" visual inspection of weld Was good.

Electron Beam Welding Data Sheet

WO/ST No.: 001605	Seq. No. 242-2
Operation No.: 5 & 6	Sheet 2 of 2

Customer: Brookhaven National Lab.	Vendor used for welding: Advanced Energy Systems, Inc.
Date: 2/23/2009 / Charge Number: GC1292	Machine Type: Electron Beam Welder
Program Number: O345	Machine Serial Number:636
Part Name: Tension Specimen	Gun Type: BK 1.4 mm fil. V-style ribbon
Part Number:1292G000107-5 / Rev. / Qty. 1	Operator: Ted Matos
Serial Number: N/A	**Weld Description**
Sketch:	Specification Number: WPS-N-1-08
	Material 1:Niobium .157
	Material 2: Niobium
	Weld Type: Keyhole weld
	Joint Type: interlocking angular
	Joint Thickness: .167
	Tooling
	Fixture Type: test piece holder
	Fixture Angle: 19. 5 degree
	Weld Cycle Data
	Vacuum Level: 3.0 x10 -5
	Ramp Up: N/A
	Over Lap: N/A
	Fade Out: N/A
	Cool down time in vacuum: 30 min
	Back fill time to 20 Torr: 22 min
	Cool down time at 20 Torr: 15 min
	Temperature at atmosphere: 95.0

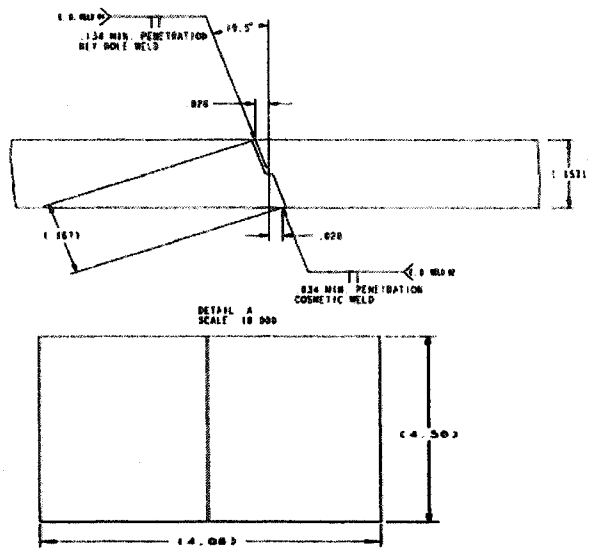

Penetration Requirements:	%	Depth (Inches)	Length
Spot Tack Weld			N/A
Stitch Tack Weld			
Seal Weld			N/A
Weld	20	.034(min.)	N/A
Cosmetic Weld			N/A

Weld Type	Beam KV	Beam MA	Frequency Hz	Amplitude (X / Y)	Spot Size Inches	Welding Speed IN / MIN	Welding Speed SEC / REV	Defocus	Gun to work Distance
Tack Weld	N/A	N/A	N/A	N/A N/A	N/A N/A	N/A	N/A	N/A	N/A
Weld Pass	N/A	N/A	N/A	X=N/A Y=N/A	X= N/A Y= N/A	N/A	N/A	N/A	N/A
"R F" Pass	100	25	1000	X=3.5 Y=3.5	X= .040 Y=.040	18	N/A	+4 (610)	11
				X= Y=	X= Y=				

Comments: "No fit up gap, No filler material and No Pre-heat of parts required" visual inspection of weld Was good.

Certified Test Report

LABORATORY TESTING INC.
2331 Topaz Drive, Hatfield, PA 19440
Phone: 800-219-9095 ◆ Fax: 800-219-9096

BNL001-09-05-15980-6

Accredited Nadcap™
Materials Testing Laboratory
Nondestructive Testing

SOLD TO
Brookhaven National Laboratory
Collider-Accelerator Dept.
Building 911A
Upton, NY 11973-5000

SHIP TO
Brookhaven National Laboratory
Collider-Accelerator Dept.
Building 911A
Upton, NY 11973-5000
ATTN: G. T. McIntyre

CUSTOMER P.O.
BNL-0000148742

CERTIFICATION DATE
6/18/2009

SHIP VIA
EMAIL & UPS

DESCRIPTION

Quantity:	1
Size:	4" x 4 1/2"
PO Line Item No.:	1 & 2
Drawing No.:	1242T00 107
Weld Type:	Angle Interlocking Butt
Weld Thicknesses:	0.157 / 0.157
Weld Angle from Norm:	19.5 Degrees
Material Types:	RRR / RRR
PQR No. (AES-Seq. No):	AES- EGUN-242
Material:	Niobium

TENSILE TEST:

APPLICABLE SPECIFICATIONS: **ASME BPVC, SECTION IX, 2007 EDITION, 2008a ADDENDA**

	Specimen #1	Specimen #2	Specimen #3
Size (Inches)	0.2465 x 0.1516	0.2460 x 0.1503	0.2495 x 0.1499
Area (Square Inches)	0.0374	0.0370	0.0374
Tensile Load (Pounds)	754.00	780.00	789.00
Tensile Strength (KSI)	20.2	21.1	21.1
Yield Load (.2%) (Pounds)	362.74	379.00	371.00
Yield Strength (.2%) (KSI)	9.7	10.3	9.90
Elongation (In 2") (%)	28	38	40
Failure Location	Weld Area	Weld Area	Weld Area
Mode of Fracture	Ductile	Ductile	Ductile

LABORATORY TESTING INC.
2331 Topaz Drive, Hatfield, PA 19440
Phone: 800-219-9095 • Fax: 800-219-9096

Certified Test Report

BNL001-09-05-15980-6

Accredited Nadcap™
Materials Testing Laboratory
Nondestructive Testing

A Macro Examination was performed on (2) pieces of the submitted Test Specimens in accordance with Customer Instructions with the following results:

ACTUAL: The samples were sectioned, ground, and etched in accordance with LTI Procedure Numbers 90-MACRO-1, Rev. 2, Dated 11/2/06 and 90-MICRO-1, Rev. 6, Dated 6/18/01.

Representative photographs revealed that the general macrostructure of the materials exhibited no evidence of cracking, excessive amounts of inclusions or significant porosity as shown in Figures 11 and 12.

The services performed above were done in accordance with LTI's Quality System Program Manual Revision 18 dated 7/27/07 and ISO/IEC 17025. These results relate only to the items tested and this report shall not be reproduced, except in full, without the written approval of Laboratory Testing, Inc. L.T.I. is accredited by PRI to ISO17025 and by Nadcap for NDT and Materials Testing for the test methods and specific services as listed in the Scopes of Accreditation available at www.labtesting.com and www.eAuditNet.com. The results reported on this test report represent the actual attributes of the material tested and indicate full compliance with all applicable specification and contract requirements.

MERCURY CONTAMINATION: During the testing and inspection, the product did not come in direct contact with mercury or any of its compounds nor with any mercury containing devices employing a single boundary of containment.

NOTE: The recording of false, fictitious or fraudulent statements or entries on this document may be punishable as a felony under Federal Statutes.

Sherri L. Scheifele
QA Specialist

Sherri L. Scheifele

By: _____
Authorized Signature

LABORATORY TESTING INC.
2331 Topaz Drive, Hatfield, PA 19440
Phone: 800-219-9095 • Fax: 800-219-9096

BNL001-09-05-15980-6

Accredited Nadcap™
Materials Testing Laboratory
Nondestructive Testing

PHOTOGRAPHIC SUBMITTAL

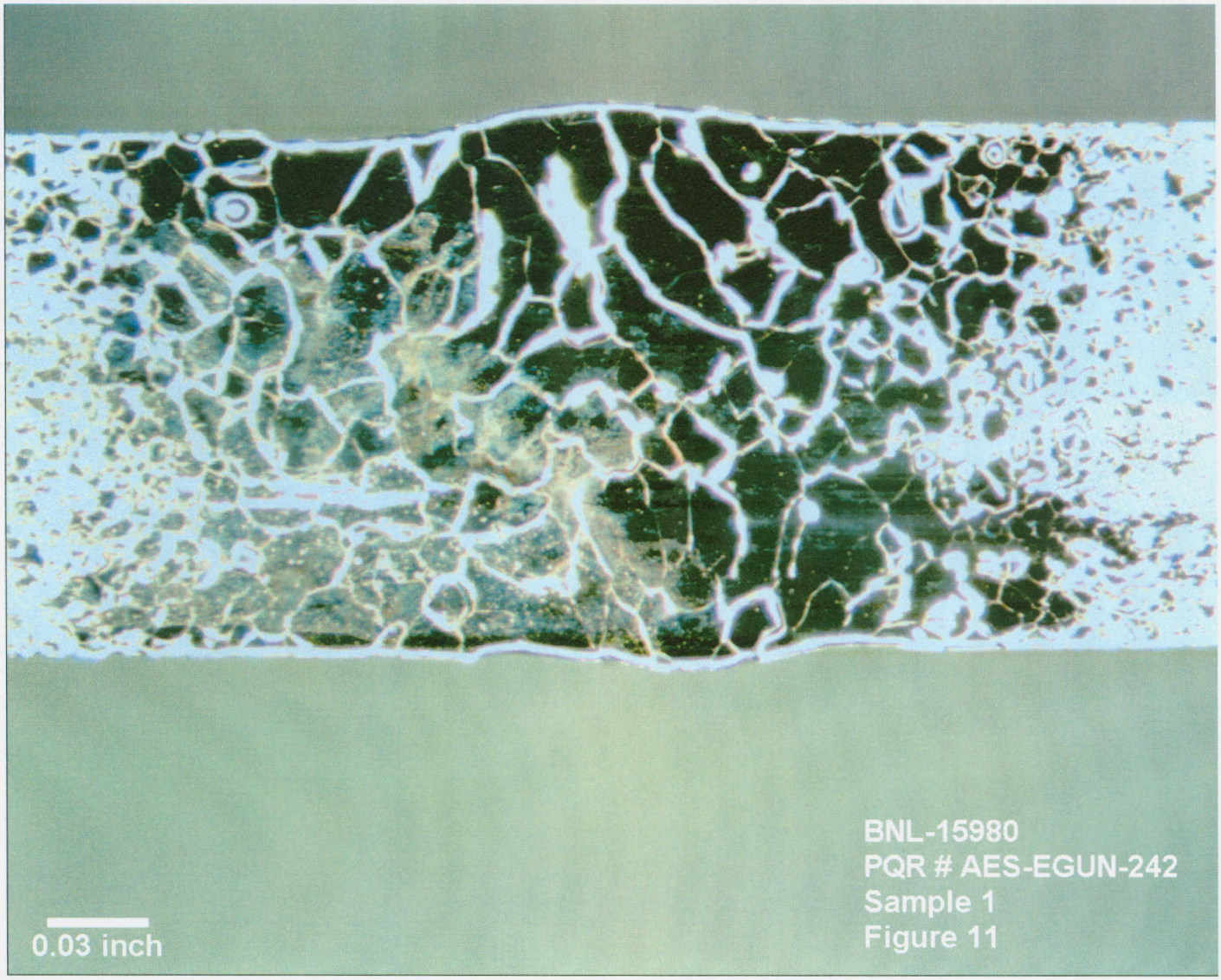

FIGURE 11

LABORATORY TESTING INC.
2331 Topaz Drive, Hatfield, PA 19440
Phone: 800-219-9095 • Fax: 800-219-9096

Certified Test Report

BNL001-09-05-15980-6

Accredited Nadcap™
Materials Testing Laboratory
Nondestructive Testing

PHOTOGRAPHIC SUBMITTAL

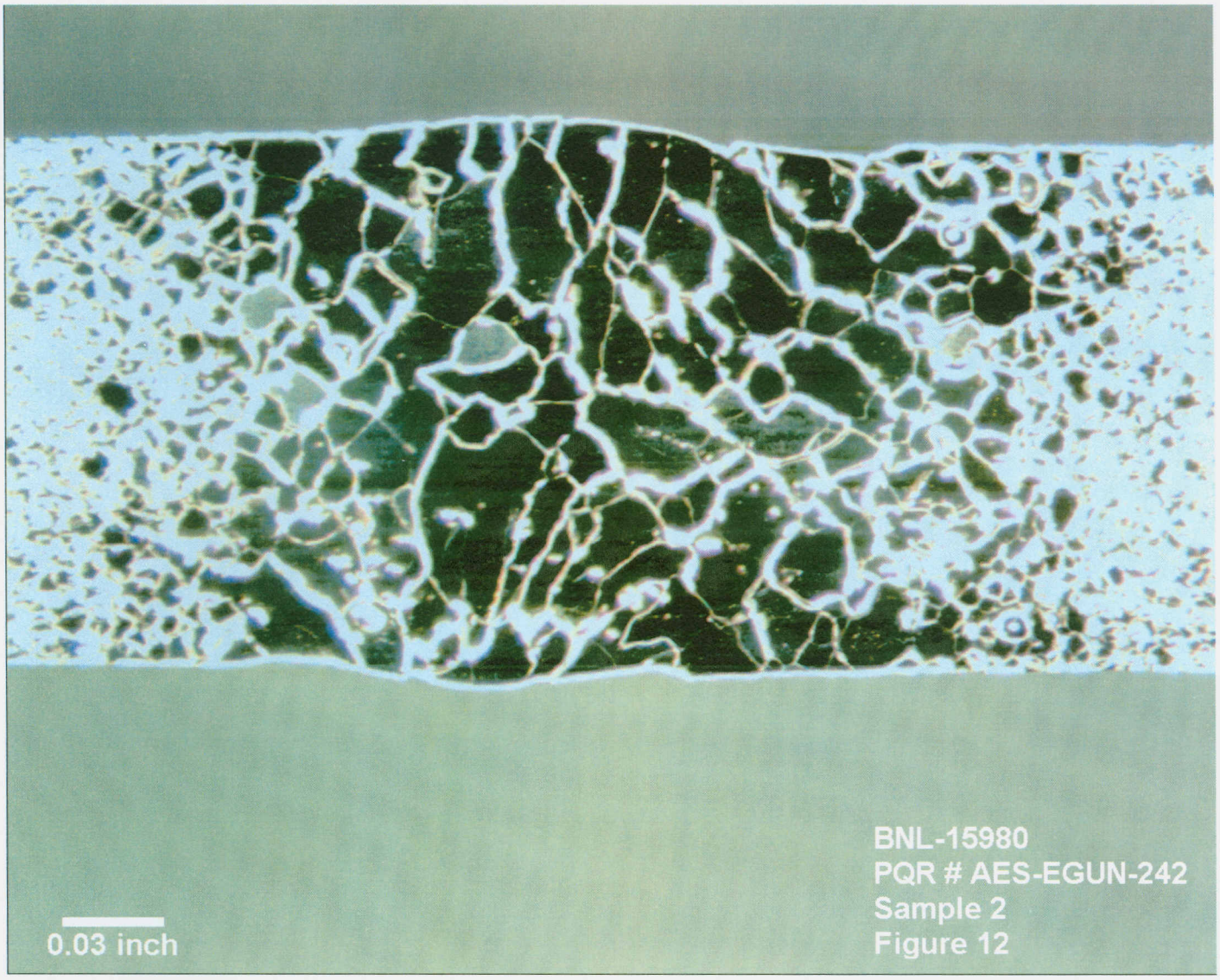

FIGURE 12

Electron Beam Welding Data Sheet

WO/ST No.: 001617	Seq. No. 249
Operation No.: 6 & 7	Sheet 1 of 1

Customer: Brookhaven National Lab.	Vendor used for welding: Advanced Energy Systems, Inc.
Date:4/6/2009 / Charge Number: GC1292-001	Machine Type: Electron Beam Welder
Program Number:	Machine Serial Number: 636
Part Name: Tension Test Specimen	Gun Type: BK1.4: 1.4 mm FILA. V-STYLE
Part Number:1242T00108-5 / Rev. A / Qty. 1	Operator: Ted Matos
Serial Number: N/A	**Weld Description**
Sketch:	Specification Number: WPS-N-1-08
	Material 1:Nb55Ti .330x2.13x4.5
	Material 2: Nb RRR>250
	Weld Type: Full penetration Keyhole weld
	Joint Type: Butt
	Joint Thickness: .330 min. pen.
	Tooling
	Fixture Type: Holding plate
	Fixture Angle: 0
	Weld Cycle Data
	Vacuum Level: 2.8 x 10-5
	Ramp Up: n/a
	Over Lap: n/a
	Fade Out: n/a
	Cool down time in vacuum: 20 min.
	Back fill time to 20 Torr: n/a
	Cool down time at 20 Torr: n/a
	Temperature at atmosphere: 113.0

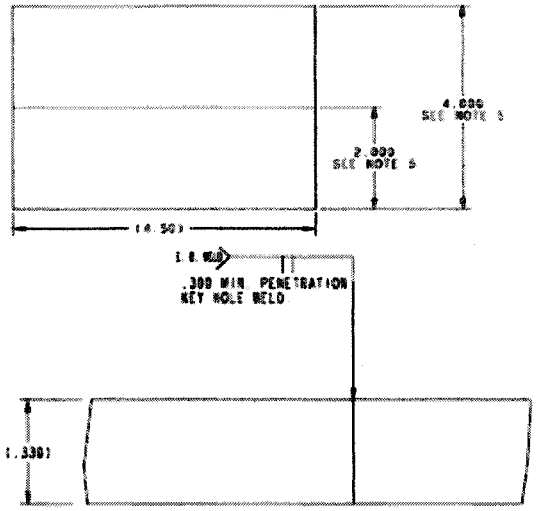

Penetration Requirements:	%	Depth (Inches)	Length
Spot Tack Weld			N/A
Stitch Tack Weld			
Seal Weld			N/A
Weld	100 %	.330 min.	N/A
Cosmetic Weld			N/A

Weld Type	Beam KV	Beam MA	Frequency Hz	Amplitude (X / Y)	Spot Size Inches	Welding Speed IN / MIN	Welding Speed SEC / REV	Defocus	Gun to work Distance
Tack Weld	140	3	N/A	X= N/A Y= N/A	X= N/A Y= N/A	30"		- ½"	11"
Seal Weld	140	11	N/A	X= N/A Y= N/A	X= N/A Y= N/A	30"		- ½"	11"
Weld	140	22	N/A	X= N/A Y= N/A	X= N/A Y= N/A	30"		- ½"	11"
Cosmetic Weld				X= Y=	X= Y=				

Comments: "No fit up gap, No filler material and No Pre-heat of parts required" Surface of weld looks good, Consistent under bead a small crown on the under side.

Certified Test Report

LABORATORY TESTING INC.
2331 Topaz Drive, Hatfield, PA 19440
Phone: 800-219-9095 ◆ Fax: 800-219-9096

BNL001-09-05-15980-7

Accredited Nadcap™
Materials Testing Laboratory
Nondestructive Testing

SOLD TO
Brookhaven National Laboratory
Collider-Accelerator Dept.
Building 911A
Upton, NY 11973-5000

SHIP TO
Brookhaven National Laboratory
Collider-Accelerator Dept.
Building 911A
Upton, NY 11973-5000
ATTN: G. T. McIntyre

CUSTOMER P.O.	CERTIFICATION DATE	SHIP VIA
BNL-0000148742	6/18/2009	EMAIL & UPS

DESCRIPTION

Quantity:	1
Size:	4" x 4 1/2"
PO Line Item No.:	1 & 2
Drawing No.:	1242T00 108
Weld Type:	Butt
Weld Thicknesses:	0.330 / 0.330
Weld Angle from Norm:	N/A
Material Types:	RRR / NbTi
PQR No. (AES-Seq. No):	AES- EGUN-249
Material:	Niobium

TENSILE TEST:

APPLICABLE SPECIFICATIONS: **ASME BPVC, SECTION IX, 2007 EDITION, 2008a ADDENDA**

	Specimen #1	Specimen #2	Specimen #3
Size (Inches)	0.2490 x 0.3250	0.2485 x 0.3239	0.2485 x 0.3300
Area (Square Inches)	0.0809	0.0805	0.0820
Tensile Load (Pounds)	1,990.00	1,952.50	1,967.50
Tensile Strength (KSI)	24.6	24.3	24.0
Yield Load (.2%) (Pounds)	904.89	1,109.50	909.38
Yield Strength (.2%) (KSI)	11.2	13.8	11.1
Elongation (In 2") (%)	42	46	44
Failure Location	Base Metal	Base Metal	Base Metal
Mode of Fracture	Ductile	Ductile	Ductile

LABORATORY TESTING INC.
2331 Topaz Drive, Hatfield, PA 19440
Phone: 800-219-9095 ◆ Fax: 800-219-9096

Certified Test Report

BNL001-09-05-15980-7

Accredited Nadcap™
Materials Testing Laboratory
Nondestructive Testing

A Macro Examination was performed on (2) pieces of the submitted Test Specimens in accordance with Customer Instructions with the following results:

ACTUAL: The samples were sectioned, ground, and etched in accordance with LTI Procedure Numbers 90-MACRO-1, Rev. 2, Dated 11/2/06 and 90-MICRO-1, Rev. 6, Dated 6/18/01.

Representative photographs revealed that the general macrostructure of the materials exhibited no evidence of cracking, excessive amounts of inclusions or significant porosity as shown in Figures 13 and 14.

The services performed above were done in accordance with LTI's Quality System Program Manual Revision 18 dated 7/27/07 and ISO/IEC 17025. These results relate only to the items tested and this report shall not be reproduced, except in full, without the written approval of Laboratory Testing, Inc. L.T.I. is accredited by PRI to ISO17025 and by Nadcap for NDT and Materials Testing for the test methods and specific services as listed in the Scopes of Accreditation available at www.labtesting.com and www.eAuditNet.com. The results reported on this test report represent the actual attributes of the material tested and indicate full compliance with all applicable specification and contract requirements.

MERCURY CONTAMINATION: During the testing and inspection, the product did not come in direct contact with mercury or any of its compounds nor with any mercury containing devices employing a single boundary of containment.

NOTE: The recording of false, fictitious or fraudulent statements or entries on this document may be punishable as a felony under Federal Statutes.

Sherri L. Scheifele
QA Specialist

Sherri L. Scheifele

By: _____
Authorized Signature

LABORATORY TESTING INC.
2331 Topaz Drive, Hatfield, PA 19440
Phone: 800-219-9095 ◆ Fax: 800-219-9096

Certified Test Report

BNL001-09-05-15980-7

Accredited Nadcap™
Materials Testing Laboratory
Nondestructive Testing

PHOTOGRAPHIC SUBMITTAL

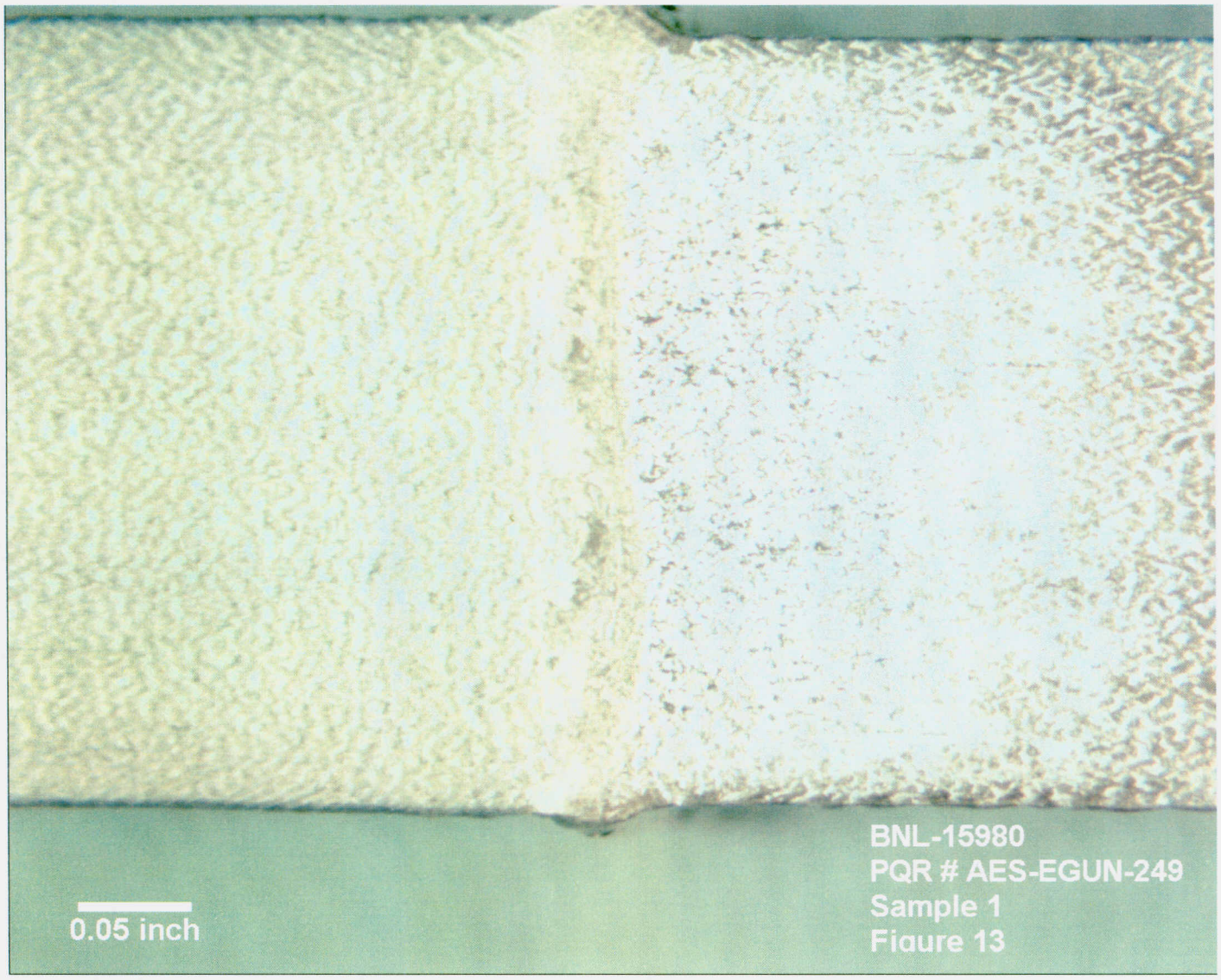

FIGURE 13

LABORATORY TESTING INC.
2331 Topaz Drive, Hatfield, PA 19440
Phone: 800-219-9095 • Fax: 800-219-9096

Certified Test Report

BNL001-09-05-15980-7

Accredited Nadcap™
Materials Testing Laboratory
Nondestructive Testing

PHOTOGRAPHIC SUBMITTAL

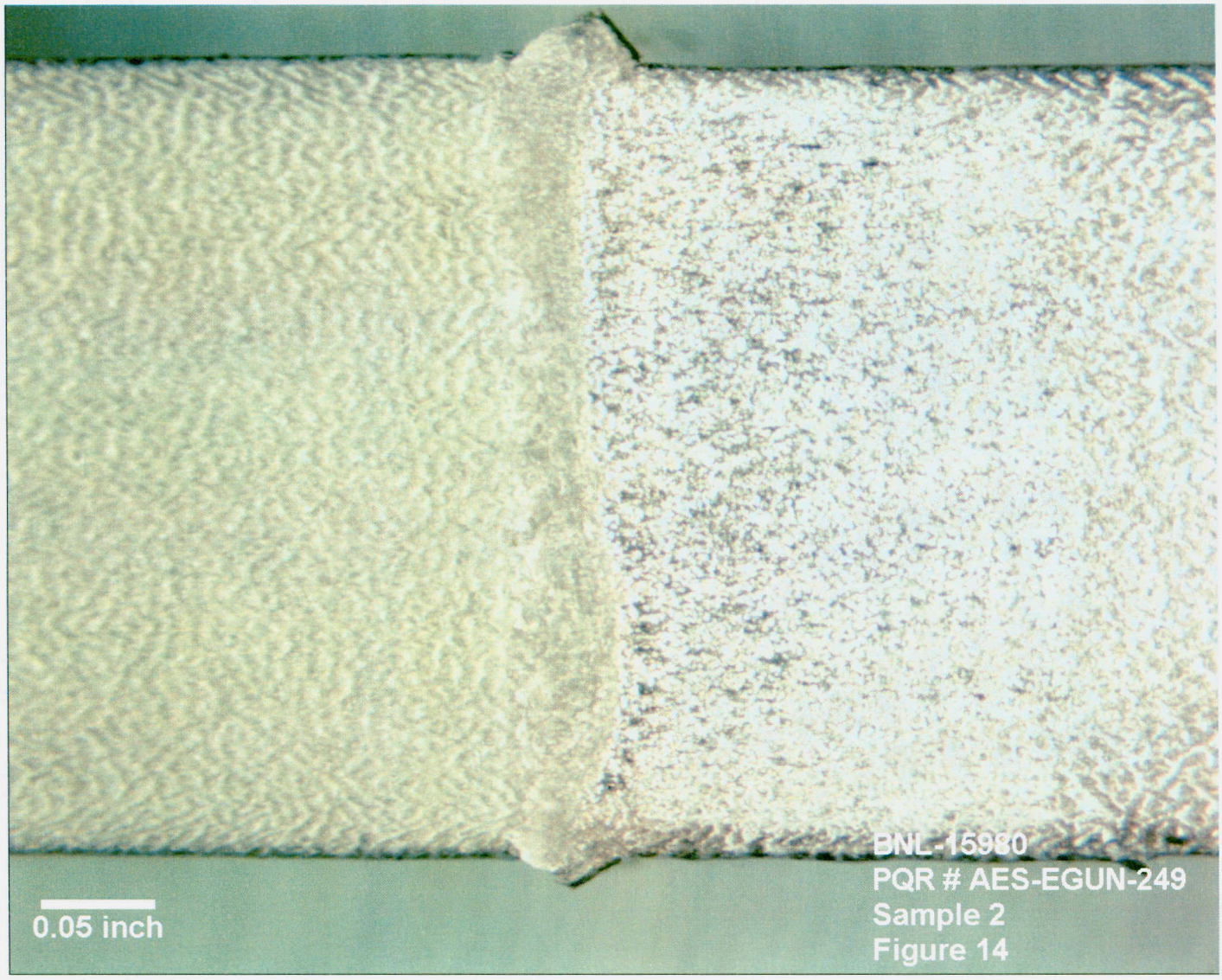

FIGURE 14

Electron Beam Welding Data Sheet

WO/ST No.: 001618	Seq. No. 247
Operation No.: 6&7	Sheet 1 of 1

Customer: Brookhaven National Lab.	Vendor used for welding: Advanced Energy Systems, Inc.
Date:4/2/2009 / Charge Number: GC1292-001	Machine Type: Electron Beam Welder
Program Number: 0345	Machine Serial Number: 636
Part Name: Tension test specimen	Gun Type: BK1.4 : 1.4 mm FILA. V-STYLE
Part Number:1242T00110-5 / Rev. A / Qty. 1	Operator: Ted Matos
Serial Number: N/A	**Weld Description**
Sketch:	Specification Number: WPS-N-1-08
	Material 1:Nb55Ti
	Material 2: Nb RRR>250
	Weld Type: Keyhole full penetration
	Joint Type: Interlocking Butt
	Joint Thickness: .260
	Tooling
	Fixture Type: plate holder
	Fixture Angle: 0 degrees
	Weld Cycle Data
	Vacuum Level: 3.0 x 10-5
	Ramp Up: N/A
	Over Lap: N/A
	Fade Out: N/A
	Cool down time in vacuum: 5 min.
	Back fill time to 20 Torr: N/A
	Cool down time at 20 Torr: N/A
	Temperature at atmosphere: 105.0

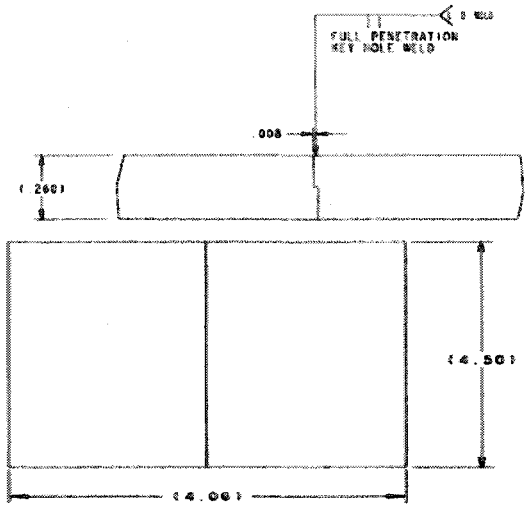

Penetration Requirements:	%	Depth (Inches)	Length
Spot Tack Weld			N/A
Stitch Tack Weld			
Seal Weld			N/A
Weld	100%	.260	N/A
Cosmetic Weld			N/A

Weld Type	Beam KV	Beam MA	Frequency Hz	Amplitude (X / Y)	Spot Size Inches	Welding Speed IN / MIN	Welding Speed SEC / REV	Defocus	Gun to work Distance
Tack Weld	140	3	N/A	X=N/A Y=N/A	X=.005 Y= .005	30"		- ½ "	11"
Seal Weld	140	6	N/A	X=N/A Y=N/A	X= .005 Y= .005	30"		- ½"	11"
Weld	140	19	N/A	X=N/A Y=N/A	X= .005 Y= .005	30"		- ½"	11"
Cosmetic Weld				X= Y=	X= Y=				

Comments: "No fit up gap, No filler material and No Pre-heat of parts required" Weld looked good

Certified Test Report

LABORATORY TESTING INC.
2331 Topaz Drive, Hatfield, PA 19440
Phone: 800-219-9095 • Fax: 800-219-9096

BNL001-09-05-15980-8

Accredited Nadcap™ Materials Testing Laboratory Nondestructive Testing

SOLD TO
Brookhaven National Laboratory
Collider-Accelerator Dept.
Building 911A
Upton, NY 11973-5000

SHIP TO
Brookhaven National Laboratory
Collider-Accelerator Dept.
Building 911A
Upton, NY 11973-5000
ATTN: G. T. McIntyre

CUSTOMER P.O.	CERTIFICATION DATE	SHIP VIA
BNL-0000148742	6/18/2009	EMAIL & UPS

DESCRIPTION

Quantity:	1
Size:	4" x 4 1/2"
PO Line Item No.:	1 & 2
Drawing No.:	1242T00 110
Weld Type:	Butt
Weld Thicknesses:	0.260 / 0.260
Weld Angle from Norm:	N/A
Material Types:	RRR / NbTi
PQR No. (AES-Seq. No):	AES- EGUN-247
Material:	Niobium

TENSILE TEST:

APPLICABLE SPECIFICATIONS: **ASME BPVC, SECTION IX, 2007 EDITION, 2008a ADDENDA**

	Specimen #1	Specimen #2	Specimen #3
Size (Inches)	0.2500 x 0.2480	0.2495 x 0.2401	0.2497 x 0.2477
Area (Square Inches)	0.0620	0.0599	0.0619
Tensile Load (Pounds)	1,475.00	1,445.00	1,470.00
Tensile Strength (KSI)	23.8	24.1	23.8
Yield Load (.2%) (Pounds)	745.00	845.94	740.00
Yield Strength (.2%) (KSI)	12.0	14.1	12.0
Elongation (In 2") (%)	39	39	41
Failure Location	Base Metal-11	Base Metal-11	Base Metal-11
Mode of Fracture	Ductile	Ductile	Ductile

LABORATORY TESTING INC.
2331 Topaz Drive, Hatfield, PA 19440
Phone: 800-219-9095 • Fax: 800-219-9096

Certified Test Report

BNL001-09-05-15980-8

Accredited Nadcap™
Materials Testing Laboratory
Nondestructive Testing

A Macro Examination was performed on (2) pieces of the submitted Test Specimens in accordance with Customer Instructions with the following results:

ACTUAL: The samples were sectioned, ground, and etched in accordance with LTI Procedure Numbers 90-MACRO-1, Rev. 2, Dated 11/2/06 and 90-MICRO-1, Rev. 6, Dated 6/18/01.

Representative photographs revealed that the general macrostructure of the materials exhibited no evidence of cracking, excessive amounts of inclusions or significant porosity as shown in Figures 15 and 16.

The services performed above were done in accordance with LTI's Quality System Program Manual Revision 18 dated 7/27/07 and ISO/IEC 17025. These results relate only to the items tested and this report shall not be reproduced, except in full, without the written approval of Laboratory Testing, Inc. L.T.I. is accredited by PRI to ISO17025 and by Nadcap for NDT and Materials Testing for the test methods and specific services as listed in the Scopes of Accreditation available at www.labtesting.com and www.eAuditNet.com. The results reported on this test report represent the actual attributes of the material tested and indicate full compliance with all applicable specification and contract requirements.

MERCURY CONTAMINATION: During the testing and inspection, the product did not come in direct contact with mercury or any of its compounds nor with any mercury containing devices employing a single boundary of containment.

NOTE: The recording of false, fictitious or fraudulent statements or entries on this document may be punishable as a felony under Federal Statutes.

Sherri L. Scheifele
QA Specialist

Sherri L Scheifele

By: _____
Authorized Signature

LABORATORY TESTING INC.
2331 Topaz Drive, Hatfield, PA 19440
Phone: 800-219-9095 ◆ Fax: 800-219-9096

Certified Test Report

BNL001-09-05-15980-8

Accredited Nadcap™
Materials Testing Laboratory
Nondestructive Testing

PHOTOGRAPHIC SUBMITTAL

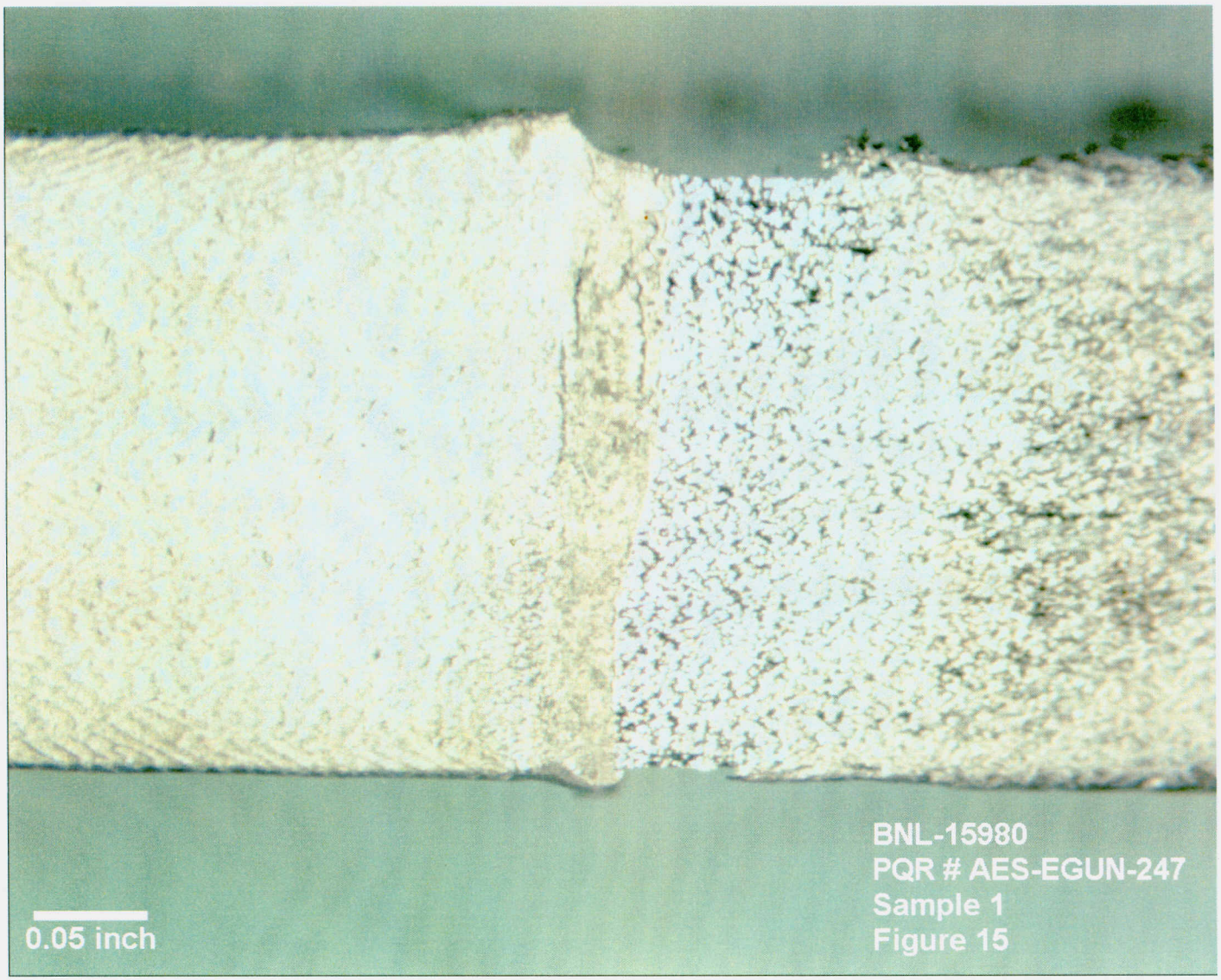

FIGURE 15

LABORATORY TESTING INC.
2331 Topaz Drive, Hatfield, PA 19440
Phone: 800-219-9095 ◆ Fax: 800-219-9096

Certified Test Report

BNL001-09-05-15980-8

Accredited Nadcap™
Materials Testing Laboratory
Nondestructive Testing

PHOTOGRAPHIC SUBMITTAL

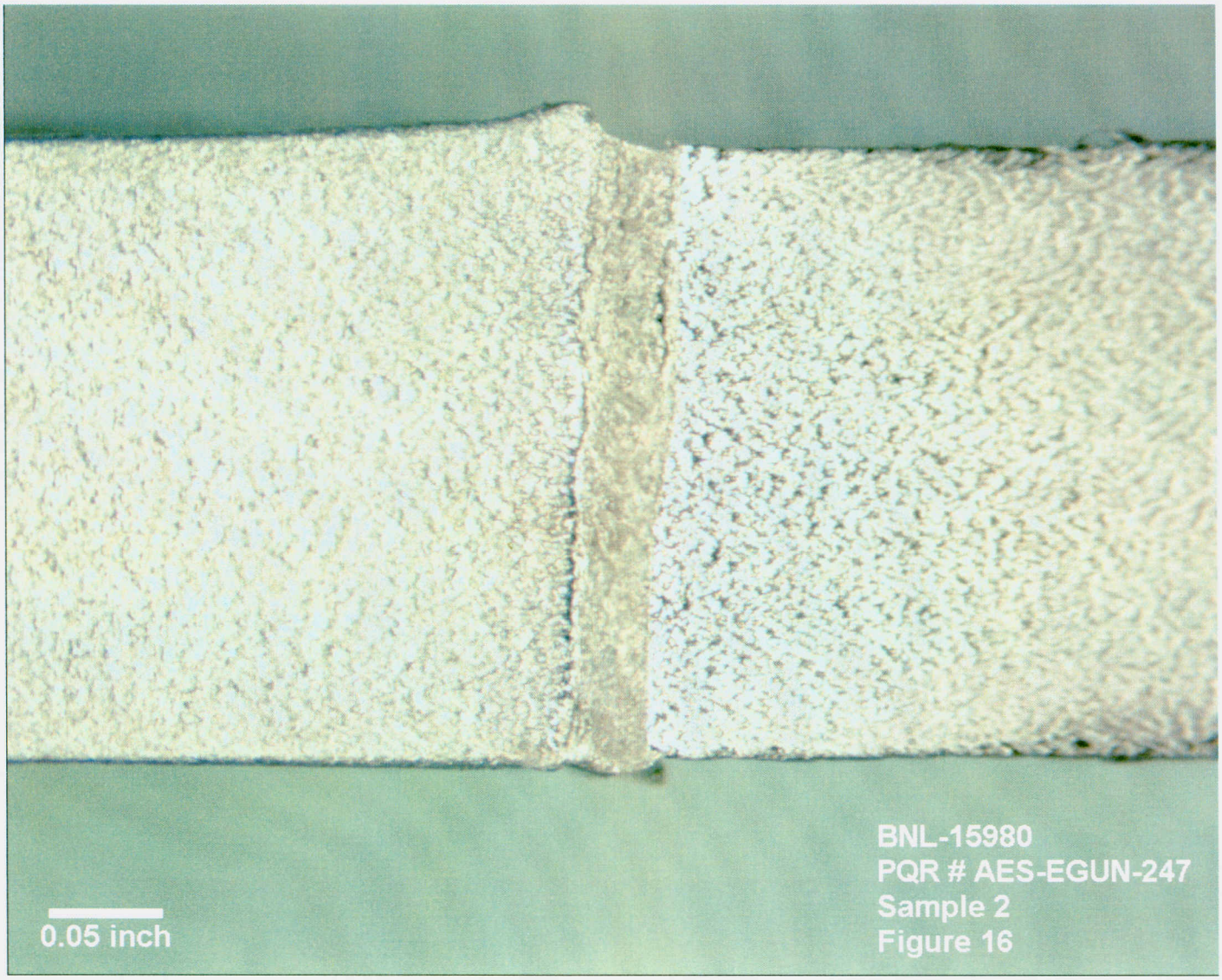

FIGURE 16

Electron Beam Welding Data Sheet

WO/ST No.:001619	Seq. No. 254
Operation No.: 6&7	Sheet 1 of 1

Customer: Brookhaven National Lab.	Vendor used for welding: Advanced Energy Systems, Inc.
Date:4/20/09 / Charge Number: GC1292-001	Machine Type: Electron Beam Welder
Program Number: O345	Machine Serial Number: 636
Part Name: Tension Specimen	Gun Type: BK1.4: 1.4 mm FILA. V-STYLE
Part Number:1242T00111-5 / Rev. A / Qty. 1	Operator: Ted Matos
Serial Number: N/A	**Weld Description**
Sketch:	Specification Number: WPS-N-1-08
	Material 1:NbTi .313x1x5
	Material 2: NbTi .375x2x5
	Weld Type: Full penetration keyhole weld
	Joint Type: Butt with shoulder
	Joint Thickness: .313
	Tooling
	Fixture Type: plate holder
	Fixture Angle: no angle
	Weld Cycle Data
	Vacuum Level: 3.0 x 10-5
	Ramp Up: N/A
	Over Lap: N/A
	Fade Out: N/A
	Cool down time in vacuum: left under vac.
	Back fill time to 20 Torr: over night
	Cool down time at 20 Torr: N/A
	Temperature at atmosphere: N/A

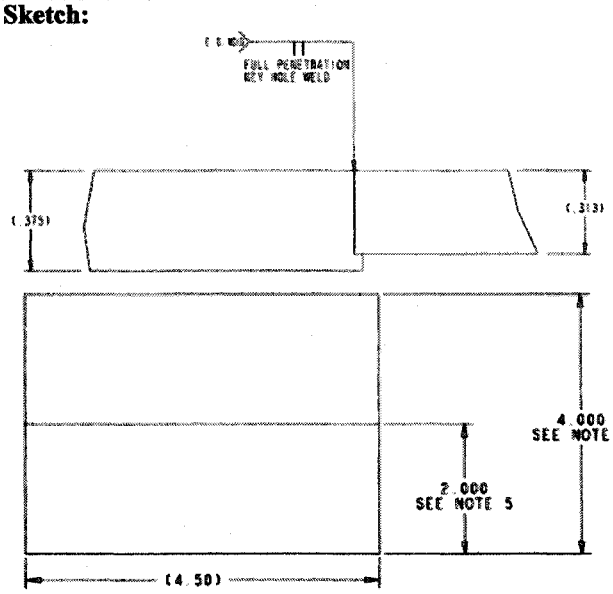

Penetration Requirements:	%	Depth (Inches)	Length
Spot Tack Weld	N/A	N/A	N/A
Stitch Tack Weld	N/A	N/A	
Seal Weld	N/A	N/A	N/A
Weld	100%	.313	N/A
Cosmetic Weld	N/A	N/A	N/A

Weld Type	Beam KV	Beam MA	Frequency Hz	Amplitude (X / Y)	Spot Size Inches	Welding Speed IN / MIN	Welding Speed SEC / REV	Defocus	Gun to work Distance
Tack Weld	100	3	N/A	X= N/A Y= N/A	X= N/A Y= N/A	15	N/A	+2	11
Seal Weld	100	9	N/A	X= N/A Y= N/A	X= N/A Y= N/A	15	N/A	+2	11
Weld	100	21	N/A	X= N/A Y= N/A	X= N/A Y= N/A	15	N/A	+2	11
Cosmetic Weld				X= Y=	X= Y=				

Comments: "No fit up gap, No filler material and No Pre-heat of parts required" Surface was for the most part Consistent bead with a positive crown. Under bead was rough showing full pen.

Certified Test Report

LABORATORY TESTING INC.
2331 Topaz Drive, Hatfield, PA 19440
Phone: 800-219-9095 ◆ Fax: 800-219-9096

BNL001-09-05-15980-9

Accredited Nadcap™
Materials Testing Laboratory
Nondestructive Testing

SOLD TO
Brookhaven National Laboratory
Collider-Accelerator Dept.
Building 911A
Upton, NY 11973-5000

SHIP TO
Brookhaven National Laboratory
Collider-Accelerator Dept.
Building 911A
Upton, NY 11973-5000
ATTN: G. T. McIntyre

CUSTOMER P.O.	CERTIFICATION DATE	SHIP VIA
BNL-0000148742	6/18/2009	EMAIL & UPS

DESCRIPTION

Quantity:	1
Size:	4" x 4 1/2"
PO Line Item No.:	1 & 2
Drawing No.:	1242T00 111
Weld Type:	Butt
Weld Thicknesses:	0.375 / 0.313
Weld Angle from Norm:	N/A
Material Types:	NbTi / NbTi
PQR No. (AES-Seq. No):	AES- EGUN-254
Material:	Niobium

TENSILE TEST:

APPLICABLE SPECIFICATIONS: **ASME BPVC, SECTION IX, 2007 EDITION, 2008a ADDENDA**

	Specimen #1	Specimen #2	Specimen #3
Size (Inches)	0.2484 x 0.3176	0.2479 x 0.3226	0.2473 x 0.3187
Area (Square Inches)	0.0789	0.0800	0.0788
Tensile Load (Pounds)	4,895.00	4,945.00	5,125.00
Tensile Strength (KSI)	62.0	62.0	65.0
Yield Load (.2%) (Pounds)	4,518.46	4,535.00	4,700.00
Yield Strength (.2%) (KSI)	57.5	56.5	59.5
Elongation (In 2") (%)	32	32	35
Failure Location	Base Metal-11	Base Metal-11	Base Metal-11
Mode of Fracture	Ductile	Ductile	Ductile

LABORATORY TESTING INC.
2331 Topaz Drive, Hatfield, PA 19440
Phone: 800-219-9095 • Fax: 800-219-9096

Certified Test Report

BNL001-09-05-15980-9

Accredited Nadcap™
Materials Testing Laboratory
Nondestructive Testing

A Macro Examination was performed on (2) pieces of the submitted Test Specimens in accordance with Customer Instructions with the following results:

ACTUAL: The samples were sectioned, ground, and etched in accordance with LTI Procedure Numbers 90-MACRO-1, Rev. 2, Dated 11/2/06 and 90-MICRO-1, Rev. 6, Dated 6/18/01.

Representative photographs revealed that the general macrostructure of the materials exhibited no evidence of cracking, excessive amounts of inclusions or significant porosity as shown in Figures 17 and 18.

The services performed above were done in accordance with LTI's Quality System Program Manual Revision 18 dated 7/27/07 and ISO/IEC 17025. These results relate only to the items tested and this report shall not be reproduced, except in full, without the written approval of Laboratory Testing, Inc. L.T.I. is accredited by PRI to ISO17025 and by Nadcap for NDT and Materials Testing for the test methods and specific services as listed in the Scopes of Accreditation available at www.labtesting.com and www.eAuditNet.com. The results reported on this test report represent the actual attributes of the material tested and indicate full compliance with all applicable specification and contract requirements.

MERCURY CONTAMINATION: During the testing and inspection, the product did not come in direct contact with mercury or any of its compounds nor with any mercury containing devices employing a single boundary of containment.

NOTE: The recording of false, fictitious or fraudulent statements or entries on this document may be punishable as a felony under Federal Statutes.

Sherri L. Scheifele
QA Specialist

Sherri L Scheifele

By: _____
Authorized Signature

LABORATORY TESTING INC.
2331 Topaz Drive, Hatfield, PA 19440
Phone: 800-219-9095 • Fax: 800-219-9096

Certified Test Report

BNL001-09-05-15980-9

Accredited Nadcap™
Materials Testing Laboratory
Nondestructive Testing

PHOTOGRAPHIC SUBMITTAL

FIGURE 17

LABORATORY TESTING INC.
2331 Topaz Drive, Hatfield, PA 19440
Phone: 800-219-9095 ◆ Fax: 800-219-9096

Certified Test Report

BNL001-09-05-15980-9

Accredited Nadcap™
Materials Testing Laboratory
Nondestructive Testing

PHOTOGRAPHIC SUBMITTAL

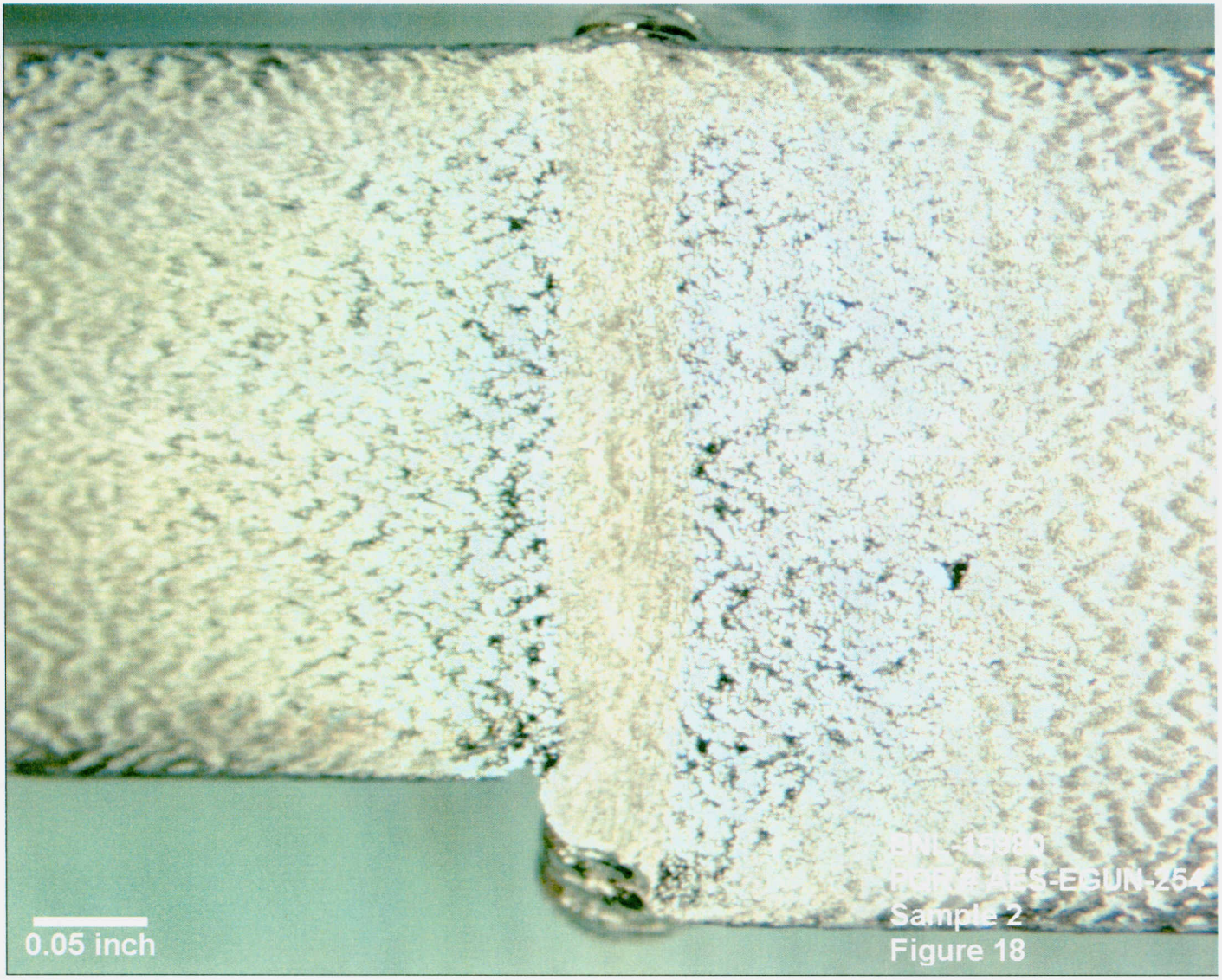

FIGURE 18

Electron Beam Welding Data Sheet

WO/ST No.: 001620	Seq. No. 246-1
Operation No.: 5 & 6	Sheet 1 of 2

Customer: Brookhaven National Lab.	Vendor used for welding: Advanced Energy Systems, Inc.
Date: 3/4/2009 | Charge Number: GC1292	Machine Type: Electron Beam Welder
Program Number: O345	Machine Serial Number:636
Part Name: Bend Specimen	Gun Type: BK 1.4 mm fil. V-style ribbon
Part Number:1292G000117-5 | Rev. A | Qty. 1	Operator: Ted Matos
Serial Number: N/A	**Weld Description**
Sketch: op #1	Specification Number: WPS-N-1-08
	Material 1: Niobium .157
	Material 2: Niobium .157
	Weld Type: Keyhole weld
	Joint Type: Interlocking Butt
	Joint Thickness: .157
	Tooling
	Fixture Type: test piece holder
	Fixture Angle: o degrees
	Weld Cycle Data
	Vacuum Level: 2.0 x 10 -5
	Ramp Up: N/A
	Over Lap: N/A
	Fade Out: N/A
	Cool down time in vacuum: 60 MIN.
	Back fill time to 20 Torr: 22 min
	Cool down time at 20 Torr: 15 min
	Temperature at atmosphere: 88.0

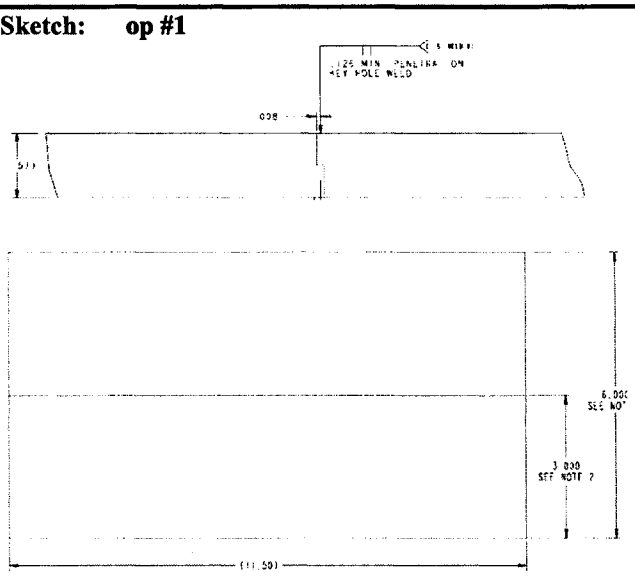

Penetration Requirements:	%	Depth (Inches)	Length
Spot Tack Weld			N/A
Stitch Tack Weld			
Seal Weld			N/A
Weld	80	.134(min.)	N/A
Cosmetic Weld			N/A

Weld Type	Beam KV	Beam MA	Frequency Hz	Amplitude (X / Y)	Spot Size Inches	Welding Speed IN / MIN	Welding Speed SEC / REV	Defocus	Gun to work Distance
Tack Weld	100	7	1000	X=2.5 Y=2.5	X=.034 Y=.034	18	N/A	-1/2"	11"
Weld Pass	100	23	1000	X=2.5 Y=2.5	X= .034 Y= .034	18	N/A	-1/2" (570)	11"
"R F" Pass	N/A	N/A	N/A	X=N/A Y=N/A	X= N/A Y= N/A	N/A	N/A	N/A	N/A
				X= Y=	X= Y=				

Comments: Visual inspection good.
On back side. Z=7.8720

Electron Beam Welding Data Sheet

WO/ST No.: 001620	Seq. No. 246-2
Operation No.: 5 & 6	Sheet 2 of 2

Customer: Brookhaven National Lab.	Vendor used for welding: Advanced Energy Systems, Inc.
Date: 3/4/2009 / Charge Number: GC1292	Machine Type: Electron Beam Welder
Program Number: O345	Machine Serial Number:636
Part Name: Bend Specimen	Gun Type: BK 1.4 mm fil. V-style ribbon
Part Number:1292G000117-5 / Rev. A / Qty. 1	Operator: Ted Matos
Serial Number: N/A	**Weld Description**
Sketch: op# 2	Specification Number: WPS-N-1-08
	Material 1:Niobium .157
	Material 2: Niobium .157
	Weld Type: Keyhole weld
	Joint Type: interlocking angular
	Joint Thickness: .157
	Tooling
	Fixture Type: test piece holder
	Fixture Angle: 9. 0degree
	Weld Cycle Data
	Vacuum Level:
	Ramp Up: N/A
	Over Lap: N/A
	Fade Out: N/A
	Cool down time in vacuum: 60 min
	Back fill time to 20 Torr: N/A
	Cool down time at 20 Torr: Left under vac.
	Temperature at atmosphere: overnight

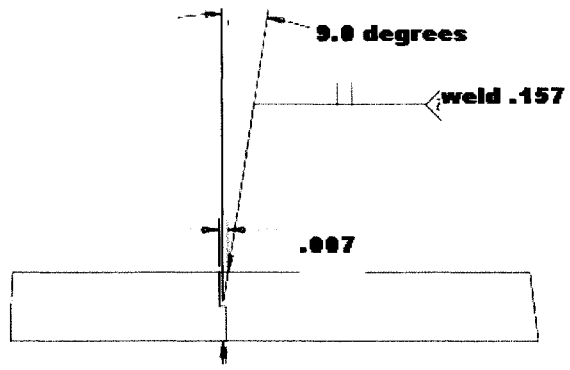

Penetration Requirements:	%	Depth (Inches)	Length
Spot Tack Weld			N/A
Stitch Tack Weld			
Seal Weld			N/A
Weld	20	.034(min.)	N/A
Cosmetic Weld			N/A

Weld Type	Beam KV	Beam MA	Frequency Hz	Amplitude (X / Y)	Spot Size Inches	Welding Speed IN / MIN	Welding Speed SEC / REV	Defocus	Gun to work Distance
Tack Weld	N/A	N/A	N/A	N/A N/A	N/A N/A	N/A	N/A	N/A	N/A
Weld Pass	N/A	N/A	N/A	X=N/A Y=N/A	X= N/A Y= N/A	N/A	N/A	N/A	N/A
"R F" Pass	100	24	1000	X=3.5 Y=3.5	X= .040 Y=.040	18	N/A	+4 (610)	11
				X= Y=	X= Y=				

Comments: Visual inspection good
Bend Z= 7.220.

Certified Test Report

LABORATORY TESTING INC.
2331 Topaz Drive, Hatfield, PA 19440
Phone: 800-219-9095 ◆ Fax: 800-219-9096

BNL001-09-05-15980-11

Accredited Nadcap™
Materials Testing Laboratory
Nondestructive Testing

SOLD TO
Brookhaven National Laboratory
Collider-Accelerator Dept.
Building 911A
Upton, NY 11973-5000

SHIP TO
Brookhaven National Laboratory
Collider-Accelerator Dept.
Building 911A
Upton, NY 11973-5000
ATTN: G. T. McIntyre

CUSTOMER P.O.	CERTIFICATION DATE	SHIP VIA
BNL-0000148742	6/18/2009	EMAIL & UPS

DESCRIPTION

Quantity:	1
Size:	6 1/8" x 11 1/2"
PO Line Item No.:	3 & 4
Drawing No.:	1242T00 117
Weld Type:	Interlocking Butt
Weld Thicknesses:	0.157 / 0.157
Weld Angle from Norm:	N/A
Material Types:	RRR / RRR
PQR No. (AES-Seq. No):	AES- EGUN-246
Material:	Niobium

BEND TEST:
APPLICABLE SPECIFICATIONS: ASME BPVC, SECTION IX, 2007 EDITION, 2008a ADDENDA

Bend Type	**ROOT 1**	**ROOT 2**	**ROOT 3**
Specimen Thickness (Inches)	.157	.157	.157
Bend Through (Degrees)	180	180	180
Pin Diameter (Inches)	.628	.628	.628
Bend Test Results	Satisfactory	Satisfactory	Ssatisfactory

BEND TEST:
APPLICABLE SPECIFICATIONS: ASME BPVC, SECTION IX, 2007 EDITION, 2008a ADDENDA

Bend Type	**FACE 1**	**FACE 2**	**FACE 3**
Specimen Thickness (Inches)	.157	.157	.157
Bend Through (Degrees)	180	180	180
Pin Diameter (Inches)	.628	.628	.628
Bend Test Results	Satisfactory	Satisfactory	Satisfactory

The services performed above were done in accordance with LTI's Quality System Program Manual Revision 18 dated 7/27/07 and ISO/IEC 17025. These results relate only to the items tested and this report shall not be reproduced, except in full, without the written approval of Laboratory Testing, Inc. L.T.I. is accredited by PRI to ISO17025 and by Nadcap for NDT and Materials Testing for the test methods and specific services as listed in the Scopes of Accreditation available at www.labtesting.com and www.eAuditNet.com. The results reported on this test report represent the actual attributes of the material tested and indicate full compliance with all applicable specification and contract requirements.

MERCURY CONTAMINATION: During the testing and inspection, the product did not come in direct contact with mercury or any of its compounds nor with any mercury containing devices employing a single boundary of containment.

NOTE: The recording of false, fictitious or fraudulent statements or entries on this document may be punishable as a felony under Federal Statutes.

Sherri L. Scheifele
QA Specialist

Sherri L Scheifele

By: _____
Authorized Signature

Electron Beam Welding Data Sheet

WO/ST No.: 001621	Seq. No.243-1
Operation No.: 5&6	Sheet 1 of 2

Customer: Brookhaven National Lab.		
Date: 2/23/2009	Charge Number: GC1292	
Program Number: O345		
Part Name: Guide Bend Specimen		
Part Number:1292G000118-5	Rev. A	Qty. 1
Serial Number: N/A		

Sketch: 19.5 degrees

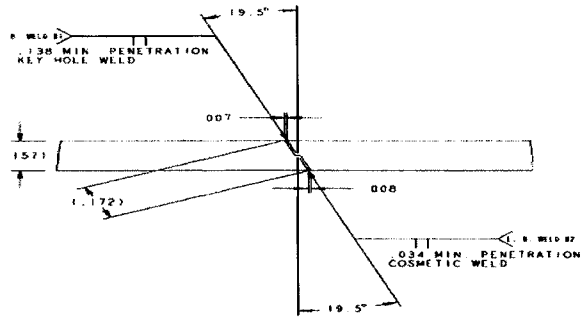

Vendor used for welding: Advanced Energy Systems, Inc.
Machine Type: Electron Beam Welder
Machine Serial Number:636
Gun Type: BK 1.4 mm fil. V-style ribbon
Operator: Ted Matos
Weld Description
Specification Number: WPS-N-1-08
Material 1: Niobium .157
Material 2:Niobium .157
Weld Type: Keyhole weld
Joint Type: Interlocking angular
Joint Thickness: .172
Tooling
Fixture Type: test piece holder
Fixture Angle: 19. 5 degree
Weld Cycle Data
Vacuum Level: 3.0 x10 -5
Ramp Up: N/A
Over Lap: N/A
Fade Out: N/A
Cool down time in vacuum: 30 min.
Back fill time to 20 Torr: 22 min.
Cool down time at 20 Torr: 15 min.
Temperature at atmosphere: 95.0

Penetration Requirements:	%	Depth (Inches)	Length
Spot Tack Weld			N/A
Stitch Tack Weld			
Seal Weld			N/A
Weld	80	.138(min.)	N/A
Cosmetic Weld			N/A

Weld Type	Beam KV	Beam MA	Frequency Hz	Amplitude (X / Y)	Spot Size Inches	Welding Speed IN / MIN	Welding Speed SEC / REV	Defocus	Gun to work Distance
Tack Weld	100	7	1000	X=2.5	.034	18	N/A	-1/2"	11"
				Y=2.5	.034				
Weld Pass	100	25	1000	X=2.5	X= .034	18	N/A	-1/2 " (570)	11
				Y=2.5	Y= .034				
Cosmetic pass	N/A	N/A	N/A	N/A	N/A	N/A	N/A	N/A	N/A
				N/A	N/A				
				X=	X=				
				Y=	Y=				

Comments: "No fit up gap, No filler material and No Pre-heat of parts required" Visual inspection of both welds Were good.

Electron Beam Welding Data Sheet

WO/ST No.: 001621	Seq. No.243-2
Operation No.: 5&6	Sheet 2 of 2

Customer: Brookhaven National Lab.	Vendor used for welding: Advanced Energy Systems, Inc.
Date: 2/23/2009 | Charge Number: GC1292	Machine Type: Electron Beam Welder
Program Number: O345	Machine Serial Number:636
Part Name: Guide Bend Specimen	Gun Type: BK 1.4 mm fil. V-style ribbon
Part Number:1292G000118-5 | Rev. A | Qty. 1	Operator: Ted Matos
Serial Number: N/A	**Weld Description**
Sketch: 19.5 degrees	Specification Number: WPS-N-1-08
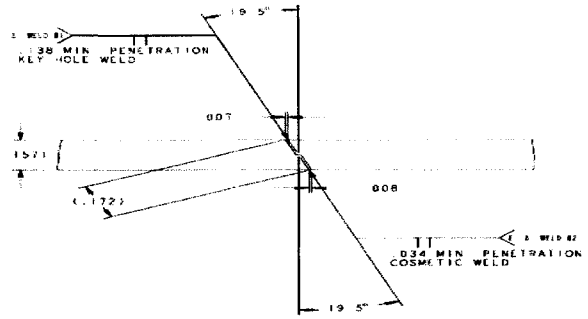	Material 1: Niobium .157
	Material 2: Niobium .157
	Weld Type: Keyhole weld
	Joint Type: Interlocking angular
	Joint Thickness: .034 min
	Tooling
	Fixture Type: test piece holder
	Fixture Angle: 19. 5 degree
	Weld Cycle Data
	Vacuum Level: 3.0 x10 -5
	Ramp Up: N/A
	Over Lap: N/A
	Fade Out: N/A
	Cool down time in vacuum: 30 min.
	Back fill time to 20 Torr: 22 min.
	Cool down time at 20 Torr: 15 min.
	Temperature at atmosphere: 95.0

Penetration Requirements:	%	Depth (Inches)	Length
Spot Tack Weld			N/A
Stitch Tack Weld			
Seal Weld			N/A
Weld	20	.034(min.)	N/A
Cosmetic Weld			N/A

Weld Type	Beam KV	Beam MA	Frequency Hz	Amplitude (X / Y)	Spot Size Inches	Welding Speed IN / MIN	Welding Speed SEC / REV	Defocus	Gun to work Distance
Tack Weld	N/A	N/A	N/A	N/A N/A	N/A N/A	N/A	N/A	N/A	N/A
Weld Pass	N/A	N/A	N/A	N/A N/A	N/A N/A	N/A	N/A	N/A	N/A
"R F" Pass(back	100	25	100	X=3.5 Y=3.5	X=.040 Y=.040	N/A	N/A	N/A	N/A
				X= Y=	X= Y=				

Comments: "No fit up gap, No filler material and No Pre-heat of parts required" Visual inspection of both welds Were good.

Certified Test Report

LABORATORY TESTING INC.
2331 Topaz Drive, Hatfield, PA 19440
Phone: 800-219-9095 • Fax: 800-219-9096

BNL001-09-05-15980-12

Accredited Nadcap™ Materials Testing Laboratory Nondestructive Testing

SOLD TO
Brookhaven National Laboratory
Collider-Accelerator Dept.
Building 911A
Upton, NY 11973-5000

SHIP TO
Brookhaven National Laboratory
Collider-Accelerator Dept.
Building 911A
Upton, NY 11973-5000
ATTN: G. T. McIntyre

CUSTOMER P.O.
BNL-0000148742

CERTIFICATION DATE
6/18/2009

SHIP VIA
EMAIL & UPS

DESCRIPTION

Quantity:	1
Size:	6 1/8" x 11 1/2"
PO Line Item No.:	3 & 4
Drawing No.:	1242T00 118
Weld Type:	Angle Interlocking Butt
Weld Thicknesses:	0.157 / 0.157
Weld Angle from Norm:	19.5 Degrees
Material Types:	RRR / RRR
PQR No. (AES-Seq. No):	AES- EGUN-243
Material:	Niobium

BEND TEST:
APPLICABLE SPECIFICATIONS: ASME BPVC, SECTION IX, 2007 EDITION, 2008a ADDENDA

Bend Type	**ROOT 1**	**ROOT 2**	**ROOT 3**
Specimen Thickness (Inches)	.157	.157	.157
Bend Through (Degrees)	180	180	180
Pin Diameter (Inches)	.628	.628	.628
Bend Test Results	Satisfactory	Satisfactory	Satisfactory

BEND TEST:
APPLICABLE SPECIFICATIONS: ASME BPVC, SECTION IX, 2007 EDITION, 2008a ADDENDA

Bend Type	**FACE 1**	**FACE 2**	**FACE 3**
Specimen Thickness (Inches)	.157	.157	.157
Bend Through (Degrees)	180	180	180
Pin Diameter (Inches)	.628	.628	.628
Bend Test Results	Satisfactory	Satisfactory	Satisfactory

The services performed above were done in accordance with LTI's Quality System Program Manual Revision 18 dated 7/27/07 and ISO/IEC 17025. These results relate only to the items tested and this report shall not be reproduced, except in full, without the written approval of Laboratory Testing, Inc. L.T.I. is accredited by PRI to ISO17025 and by Nadcap for NDT and Materials Testing for the test methods and specific services as listed in the Scopes of Accreditation available at www.labtesting.com and www.eAuditNet.com. The results reported on this test report represent the actual attributes of the material tested and indicate full compliance with all applicable specification and contract requirements.

MERCURY CONTAMINATION: During the testing and inspection, the product did not come in direct contact with mercury or any of its compounds nor with any mercury containing devices employing a single boundary of containment.

NOTE: The recording of false, fictitious or fraudulent statements or entries on this document may be punishable as a felony under Federal Statutes.

Sherri L. Scheifele
QA Specialist

Sherri L Scheifele

By: _____
Authorized Signature

Electron Beam Welding Data Sheet

WO/ST No.: 001624	Seq. No. 252
Operation No.: 5 & 6	Sheet 1 of 1

Customer: Brookhaven National Lab.		
Date:4/7/2007	Charge Number: GC1292-001	
Program Number: 0346		
Part Name: Bend test Specimen		
Part Number:1242T00120-5	Rev. A	Qty. 1
Serial Number: N/A		

Sketch:

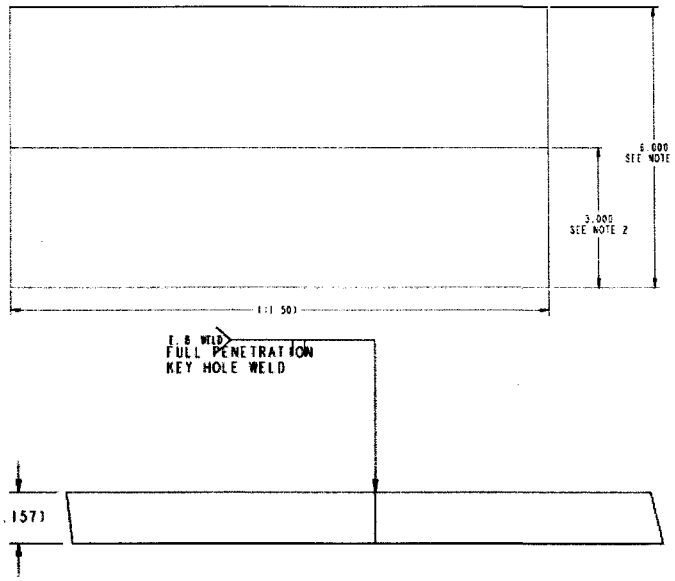

Vendor used for welding: Advanced Energy Systems, Inc.
Machine Type: Electron Beam Welder
Machine Serial Number: 636
Gun Type: BK1.4: 1.4 mm FILA. V-STYLE
Operator: Ted Matos
Weld Description
Specification Number: WPS-N-1-08
Material 1: Nb55Ti .157x3.125x11.5
Material 2: Nb55Ti .157x3.125x11.5
Weld Type: Keyhole weld full penetration
Joint Type: Butt
Joint Thickness:.157
Tooling
Fixture Type: holding plate
Fixture Angle: 0 degrees
Weld Cycle Data
Vacuum Level: 3.0 x10 -5
Ramp Up: n/a
Over Lap: n/a
Fade Out: n/a
Cool down time in vacuum: 20 min
Back fill time to 20 Torr: n/a
Cool down time at 20 Torr: n/a
Temperature at atmosphere:

Penetration Requirements:	%	Depth (Inches)	Length
Spot Tack Weld			N/A
Stitch Tack Weld			
Seal Weld			N/A
Weld	100%	.157	N/A
Cosmetic Weld			N/A

Weld Type	Beam KV	Beam MA	Frequency Hz	Amplitude (X / Y)	Spot Size Inches	Welding Speed IN / MIN	Welding Speed SEC / REV	Defocus	Gun to work Distance
Tack Weld	100	3	1000	X=6.0 Y=6.0	X=.06 Y= .06	30"	n/a	-1"	11"
Seal Weld	100	16	1000	X=6.0 Y=6.0	X= .06 Y= .06	30"	n/a	-1"	11"
Weld				X= Y=	X= Y=				
Cosmetic Weld				X= Y=	X= Y=				

Comments: "No fit up gap, No filler material and No Pre-heat of parts required" Surface of weld rough and Under bead looks pulsating and crowning.

Certified Test Report

LABORATORY TESTING INC.
2331 Topaz Drive, Hatfield, PA 19440
Phone: 800-219-9095 • Fax: 800-219-9096

BNL001-09-05-15980-13

Accredited Nadcap™ Materials Testing Laboratory Nondestructive Testing

SOLD TO
Brookhaven National Laboratory
Collider-Accelerator Dept.
Building 911A
Upton, NY 11973-5000

SHIP TO
Brookhaven National Laboratory
Collider-Accelerator Dept.
Building 911A
Upton, NY 11973-5000
ATTN: G. T. McIntyre

CUSTOMER P.O.	CERTIFICATION DATE	SHIP VIA
BNL-0000148742	6/18/2009	EMAIL & UPS

DESCRIPTION

Quantity:	1
Size:	6 1/8" x 11 1/2"
PO Line Item No.:	3 & 4
Drawing No.:	1242T00 120
Weld Type:	Butt
Weld Thicknesses:	0.375 / 0.313
Weld Angle from Norm:	N/A
Material Types:	NbTi / NbTi
PQR No. (AES-Seq. No):	AES- EGUN-252
Material:	Niobium

BEND TEST:
APPLICABLE SPECIFICATIONS: ASME BPVC, SECTION IX, 2007 EDITION, 2008a ADDENDA

Bend Type	**ROOT 1**	**ROOT 2**	**ROOT 3**
Specimen Thickness (Inches)	.157	.157	.157
Bend Through (Degrees)	180	180	180
Pin Diameter (Inches)	.628	.628	.628
Bend Test Results	Satisfactory	Satisfactory	Satisfactory

BEND TEST:
APPLICABLE SPECIFICATIONS: ASME BPVC, SECTION IX, 2007 EDITION, 2008a ADDENDA

Bend Type	**FACE 1**	**FACE 2**	**FACE 3**
Specimen Thickness (Inches)	.157	.157	.157
Bend Through (Degrees)	180	180	180
Pin Diameter (Inches)	.628	.628	.628
Bend Test Results	Satisfactory	Satisfactory	Satisfactory

The services performed above were done in accordance with LTI's Quality System Program Manual Revision 18 dated 7/27/07 and ISO/IEC 17025. These results relate only to the items tested and this report shall not be reproduced, except in full, without the written approval of Laboratory Testing, Inc. L.T.I. is accredited by PRI to ISO17025 and by Nadcap for NDT and Materials Testing for the test methods and specific services as listed in the Scopes of Accreditation available at www.labtesting.com and www.eAuditNet.com. The results reported on this test report represent the actual attributes of the material tested and indicate full compliance with all applicable specification and contract requirements.

MERCURY CONTAMINATION: During the testing and inspection, the product did not come in direct contact with mercury or any of its compounds nor with any mercury containing devices employing a single boundary of containment.

NOTE: The recording of false, fictitious or fraudulent statements or entries on this document may be punishable as a felony under Federal Statutes.

Sherri L. Scheifele
QA Specialist

Sherri L Scheifele

By: _____
Authorized Signature

Electron Beam Welding Data Sheet

WO/ST No.: 001622	Seq. No.235
Operation No.: 6&7	Sheet 1 of 1

Customer: Brookhaven National Lab.	Vendor used for welding: Advanced Energy Systems, Inc.
Date: 2/6/2009 | Charge Number:GC1292-001	Machine Type: Electron Beam
Program Number: O0346	Machine Serial Number: 636
Part Name: Bend test specimen	Gun Type: BK 1.4 mm fil. V-Style Ribbon
Part Number:1242T00127-5 | Rev.N/A | Qty. 1	Operator: Ted Matos
Serial Number: N/A	**Weld Description**
Sketch:	Specification Number: WPS-N-1-08
	Material 1: Niobium .070
	Material 2: Niobium .070
	Weld Type: liner Full pen. smooth under bend
	Joint Type: Interlocking
	Joint Thickness: .070
	Tooling
	Fixture Type: test piece holder
	Fixture Angle: 0 degree
	Weld Cycle Data
	Vacuum Level: 2.2 x 10 -5
	Ramp Up: N/A
	Over Lap: N/A
	Fade Out: N/A
	Cool down time in vacuum: 30 min.
	Back fill time to 20 Torr: 22 min
	Cool down time at 20 Torr: 15 min
	Temperature at atmosphere: 93.0 degrees

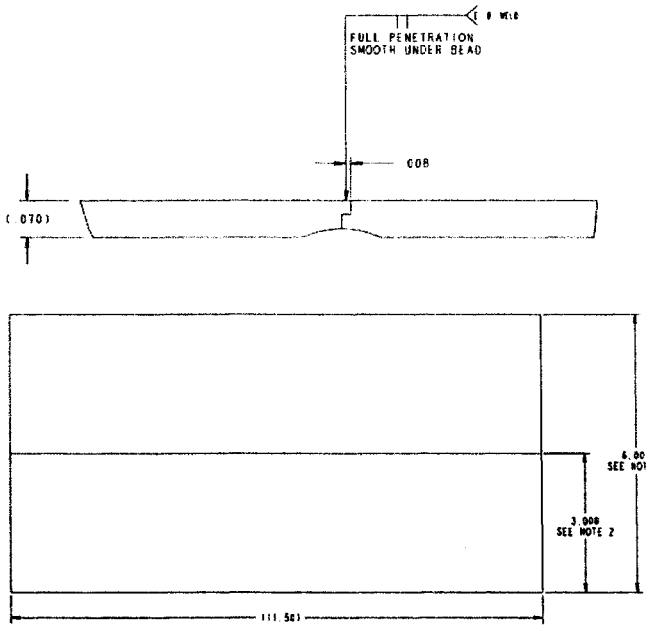

Penetration Requirements:	%	Depth (Inches)	Length
Spot Tack Weld			N/A
Stitch Tack Weld			
Seal Weld			N/A
Weld	100	.070	N/A
Cosmetic Weld			N/A

Weld Type	Beam kV	Beam mA	Frequency Hz	Amplitude (X / Y)	Spot Size Inches	Welding Speed IN / MIN	Welding Speed SEC / REV	Defocus	Gun to work Distance
Tack Weld	100	7	1000	X=6.5 Y=6.5	X=.075 Y=.075	18	N/A	-4	11
Seal Weld	100	10	1000	X=6.5 Y=6.5	X=.075 Y=.075	18	N/A	-4	11 (550)
Weld	100	17	1000	X=6.5 Y=6.5	X= .075 Y=.075	18	N/A	-4	
Cosmetic Weld				X= Y=	X= Y=				

Comments: "No fit up gap, No filler material and No Pre-heat of parts required" visual inspection was good.

Certified Test Report

LABORATORY TESTING INC.
2331 Topaz Drive, Hatfield, PA 19440
Phone: 800-219-9095 • Fax: 800-219-9096

BNL001-09-05-15980-19

Accredited Nadcap™
Materials Testing Laboratory
Nondestructive Testing

SOLD TO
Brookhaven National Laboratory
Collider-Accelerator Dept.
Building 911A
Upton, NY 11973-5000

SHIP TO
Brookhaven National Laboratory
Collider-Accelerator Dept.
Building 911A
Upton, NY 11973-5000
ATTN: G. T. McIntyre

CUSTOMER P.O.	CERTIFICATION DATE	SHIP VIA
BNL-0000148742	6/18/2009	EMAIL & UPS

DESCRIPTION

Quantity:	1
Size:	6 1/8" x 11 1/2"
PO Line Item No.:	3 & 4
Drawing No.:	1242T00 127
Weld Type:	Interlocking Butt
Weld Thicknesses:	0.070 / 0.070
Weld Angle from Norm:	N/A
Material Types:	RRR / RRR
PQR No. (AES-Seq. No):	AES- EGUN-235
Material:	Niobium

BEND TEST:
APPLICABLE SPECIFICATIONS: ASME BPVC SECTION IX, 2007 EDITION, 2008a ADDENDA

Bend Type	ROOT 1	ROOT 2	ROOT 3
Specimen Thickness (Inches)	.070	.070	.070
Bend Through (Degrees)	180	180	180
Pin Diameter (Inches)	.280	.280	.280
Bend Test Results	Satisfactory	Satisfactory	Satisfactory

BEND TEST:
APPLICABLE SPECIFICATIONS: ASME BPVC SECTION IX, 2007 EDITION, 2008a ADDENDA

Bend Type	FACE 1	FACE 2	FACE 3
Specimen Thickness (Inches)	.070	.070	.070
Bend Through (Degrees)	180	180	180
Pin Diameter (Inches)	.280	.280	.280
Bend Test Results	Satisfactory	Satisfactory	Satisfactory

The services performed above were done in accordance with LTI's Quality System Program Manual Revision 18 dated 7/27/07 and ISO/IEC 17025. These results relate only to the items tested and this report shall not be reproduced, except in full, without the written approval of Laboratory Testing, Inc. L.T.I. is accredited by PRI to ISO17025 and by Nadcap for NDT and Materials Testing for the test methods and specific services as listed in the Scopes of Accreditation available at www.labtesting.com and www.eAuditNet.com. The results reported on this test report represent the actual attributes of the material tested and indicate full compliance with all applicable specification and contract requirements.

MERCURY CONTAMINATION: During the testing and inspection, the product did not come in direct contact with mercury or any of its compounds nor with any mercury containing devices employing a single boundary of containment.

NOTE: The recording of false, fictitious or fraudulent statements or entries on this document may be punishable as a felony under Federal Statutes.

Sherri L. Scheifele
QA Specialist

Sherri L Scheifele

By: _____
Authorized Signature

Electron Beam Welding Data Sheet

WO/ST No.: 001623	Seq. No. 237
Operation No.: 5 &6	Sheet 1 of 1

Customer: Brookhaven National Lab.	Vendor used for welding: Advanced Energy Systems, Inc.
Date: 2/10/2009 | Charge Number: 1292GC00102	Machine Type: Electron Beam welder
Program Number: O346	Machine Serial Number: 636
Part Name: Bend Test Specimen	Gun Type: BK 1.4 mm fil. V-Style Ribbon
Part Number:1242T00128-5 | Rev. A | Qty. 1	Operator: Ted Matos
Serial Number: N/A	**Weld Description**
Sketch: 13 ° degree angle	Specification Number: WPS-N-1_08
	Material 1: niobium .118 thick
	Material 2: niobium.118 thick
	Weld Type: Full pen. with cosmetic pass
	Joint Type: interlock
	Joint Thickness: .121
	Tooling
	Fixture Type: test piece holder
	Fixture Angle: 13 degree
	Weld Cycle Data
	Vacuum Level: 2.4 x 10-5
	Ramp Up: N/A
	Over Lap: N/A
	Fade Out: N/A
	Cool down time in vacuum: 30 min
	Back fill time to 20 Torr: 22 min.
	Cool down time at 20 Torr: 15 min.
	Temperature at atmosphere: 99.0

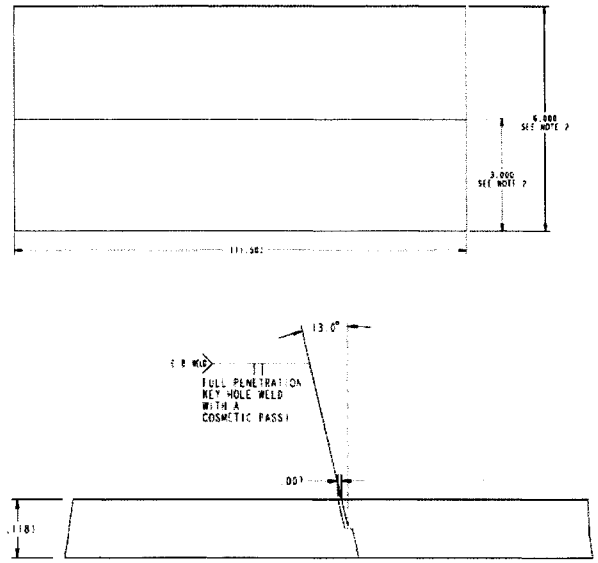

Penetration Requirements:	%	Depth (Inches)	Length
Spot Tack Weld			N/A
Stitch Tack Weld			
Seal Weld			N/A
Weld	100	.121	N/A
Cosmetic Weld			N/A

Weld Type	Beam kV	Beam mA	Frequency Hz	Amplitude (X / Y)	Spot Size Inches	Welding Speed IN / MIN	Welding Speed SEC / REV	Defocus	Gun to work Distance
Tack Weld	100	7	1000	X=.3 Y=.3	X=.009 Y=.009	18	N/A	-1/2"	11
Weld Pass	100	18	1000	X=.3 Y=.3	X=.009 Y=.009	18	N/A	-1/2 " (570)	11
Cosmetic Pass	100	18	1000	X=.3 Y=.3	X= .009 Y=.009	18	N/A	+4" (610)	11
				X= Y=	X= Y=				

Comments: Parts were weld with no .007 offset, The fade out seemed to be slightly on edge of joint. Sectioned, Etched and the whole joint was consumed by the weld.
"No fit up gap, No filler material and No Pre-heat of parts required"

Certified Test Report

LABORATORY TESTING INC.
2331 Topaz Drive, Hatfield, PA 19440
Phone: 800-219-9095 • Fax: 800-219-9096

BNL001-09-05-15980-20

Accredited Nadcap™
Materials Testing Laboratory
Nondestructive Testing

SOLD TO
Brookhaven National Laboratory
Collider-Accelerator Dept.
Building 911A
Upton, NY 11973-5000

SHIP TO
Brookhaven National Laboratory
Collider-Accelerator Dept.
Building 911A
Upton, NY 11973-5000
ATTN: G. T. McIntyre

CUSTOMER P.O.	CERTIFICATION DATE	SHIP VIA
BNL-0000148742	6/18/2009	EMAIL & UPS

DESCRIPTION

Quantity:	1
Size:	6 1/8" x 11 1/2"
PO Line Item No.:	3 & 4
Drawing No.:	1242T00 128
Weld Type:	Angle Interlocking Butt
Weld Thicknesses:	0.18 / 0.118
Weld Angle from Norm:	13 Degrees
Material Types:	RRR / RRR
PQR No. (AES-Seq. No):	AES- EGUN-237
Material:	Niobium

BEND TEST:
APPLICABLE SPECIFICATIONS: ASME BPVC SECTION IX, 2007 EDITION, 2008a ADDENDA

Bend Type	ROOT 1	ROOT 2	ROOT 3
Specimen Thickness (Inches)	.118	.118	.118
Bend Through (Degrees)	180	180	180
Pin Diameter (Inches)	.472	.472	.472
Bend Test Results	Satisfactory	Satisfactory	Satisfactory

BEND TEST:
APPLICABLE SPECIFICATIONS: ASME BPVC SECTION IX, 2007 EDITION, 2008a ADDENDA

Bend Type	FACE 1	FACE 2	FACE 3
Specimen Thickness (Inches)	.118	.118	.118
Bend Through (Degrees)	180	180	180
Pin Diameter (Inches)	.472	.472	.472
Bend Test Results	Satisfactory	Satisfactory	Satisfactory

The services performed above were done in accordance with LTI's Quality System Program Manual Revision 18 dated 7/27/07 and ISO/IEC 17025. These results relate only to the items tested and this report shall not be reproduced, except in full, without the written approval of Laboratory Testing, Inc. L.T.I. is accredited by PRI to ISO17025 and by Nadcap for NDT and Materials Testing for the test methods and specific services as listed in the Scopes of Accreditation available at www.labtesting.com and www.eAuditNet.com. The results reported on this test report represent the actual attributes of the material tested and indicate full compliance with all applicable specification and contract requirements.

MERCURY CONTAMINATION: During the testing and inspection, the product did not come in direct contact with mercury or any of its compounds nor with any mercury containing devices employing a single boundary of containment.

NOTE: The recording of false, fictitious or fraudulent statements or entries on this document may be punishable as a felony under Federal Statutes.

Sherri L. Scheifele
QA Specialist

Sherri L Scheifele

By: _____
Authorized Signature

Electron Beam Welding Data Sheet

WO/ST No.: 001833	Seq. No. 257
Operation No.: 6 & 7	Sheet 1 of 1

Customer: Brookhaven National Lab.	Vendor used for welding: Advanced Energy Systems, Inc.
Date: 3/11/2009 | Charge Number: GC1292-001	Machine Type: Electron Beam Welder
Program Number: o346	Machine Serial Number: 636
Part Name: Bend Test Specimen	Gun Type: BK1.4: 1.4 mm FILA. V-STYLE
Part Number:1242T00129-5 | Rev. B | Qty. 1	Operator: Ted Matos
Serial Number: N/A	**Weld Description**
Sketch:	Specification Number: WPS-N-1-08
	Material 1: niobium .335 thick
	Material 2: niobium .165 thick
	Weld Type: full penetration with smooth underbead
	Joint Type: angle interlocking butt
	Joint Thickness: .140
	Tooling
	Fixture Type: test plate holder
	Fixture Angle: 30 degree angle
	Weld Cycle Data
	Vacuum Level: 2.8 x 10-5
	Ramp Up: N/A
	Over Lap: N/A
	Fade Out: N/A
	Cool down time in vacuum: 40 min.
	Back fill time to 20 Torr: N/A
	Cool down time at 20 Torr: N/A
	Temperature at atmosphere: 119.0

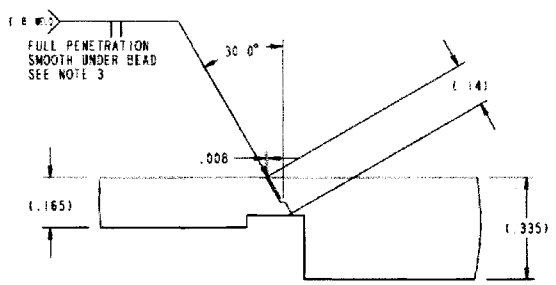

Penetration Requirements:	%	Depth (Inches)	Length
Spot Tack Weld			N/A
Stitch Tack Weld			N/A
Seal Weld			N/A
Weld	100 %	.140	N/A
Cosmetic Weld			N/A

Weld Type	Beam KV	Beam MA	Frequency Hz	Amplitude (X / Y)	Spot Size Inches	Welding Speed IN / MIN	Welding Speed SEC / REV	Defocus	Gun to work Distance
Tack Weld	100	3	1000	X=5.0 Y=5.0	X= .045 Y= .045	18	n/a	-4	11
Seal Weld	100	40	1000	X=5.0 Y=5.0	X= .045 Y= .045	18	n/a	-4	11
Weld	100	45	1000	X=5.0 Y=5.0	X= .045 Y= .045	18	n/a	-4 (555)	11
Cosmetic Weld				X= Y=	X= Y=				

Comments: "No fit up gap, No filler material and No Pre-heat of parts required" Surface had a positive crown And melt through was consistent through the whole part.

Certified Test Report

LABORATORY TESTING INC.
2331 Topaz Drive, Hatfield, PA 19440
Phone: 800-219-9095 • Fax: 800-219-9096

BNL001-09-05-15980-21

Accredited Nadcap™
Materials Testing Laboratory
Nondestructive Testing

SOLD TO
Brookhaven National Laboratory
Collider-Accelerator Dept.
Building 911A
Upton, NY 11973-5000

SHIP TO
Brookhaven National Laboratory
Collider-Accelerator Dept.
Building 911A
Upton, NY 11973-5000
ATTN: G. T. McIntyre

CUSTOMER P.O.
BNL-0000148742

CERTIFICATION DATE
6/18/2009

SHIP VIA
EMAIL & UPS

DESCRIPTION

Quantity:	1
Size:	6 1/8" x 11 1/2"
PO Line Item No.:	3 & 4
Drawing No.:	1242T00 129
Weld Type:	Angle Interlocking Butt
Weld Thicknesses:	0.165 / 0.335
Weld Angle from Norm:	30 Degrees
Material Types:	RRR / RRR
PQR No. (AES-Seq. No):	AES- EGUN-257
Material:	Niobium

BEND TEST:
APPLICABLE SPECIFICATIONS: ASME BPVC SECTION IX, 2007 EDITION, 2008a ADDENDA

Bend Type	**ROOT 1**	**ROOT 2**	**ROOT 3**
Specimen Thickness (Inches)	.165	.165	.165
Bend Through (Degrees)	180	180	180
Pin Diameter (Inches)	.660	.660	.660
Bend Test Results	Satisfactory	Satisfactory	Satisfactory

BEND TEST:
APPLICABLE SPECIFICATIONS: ASME BPVC SECTION IX, 2007 EDITION, 2008a ADDENDA

Bend Type	**FACE 1**	**FACE 2**	**FACE 3**
Specimen Thickness (Inches)	.165	.165	.165
Bend Through (Degrees)	180	180	180
Pin Diameter (Inches)	.660	.660	.660
Bend Test Results	Satisfactory	Satisfactory	Satisfactory

The services performed above were done in accordance with LTI's Quality System Program Manual Revision 18 dated 7/27/07 and ISO/IEC 17025. These results relate only to the items tested and this report shall not be reproduced, except in full, without the written approval of Laboratory Testing, Inc. L.T.I. is accredited by PRI to ISO17025 and by Nadcap for NDT and Materials Testing for the test methods and specific services as listed in the Scopes of Accreditation available at www.labtesting.com and www.eAuditNet.com. The results reported on this test report represent the actual attributes of the material tested and indicate full compliance with all applicable specification and contract requirements.

MERCURY CONTAMINATION: During the testing and inspection, the product did not come in direct contact with mercury or any of its compounds nor with any mercury containing devices employing a single boundary of containment.

NOTE: The recording of false, fictitious or fraudulent statements or entries on this document may be punishable as a felony under Federal Statutes.

Sherri L. Scheifele
QA Specialist

Sherri L Scheifele

By: _____
Authorized Signature

Certified Test Report

LABORATORY TESTING INC.
2331 Topaz Drive, Hatfield, PA 19440
Phone: 800-219-9095 • Fax: 800-219-9096

BNL001-09-05-15980-22

Accredited Nadcap™
Materials Testing Laboratory
Nondestructive Testing

SOLD TO
Brookhaven National Laboratory
Collider-Accelerator Dept.
Building 911A
Upton, NY 11973-5000

SHIP TO
Brookhaven National Laboratory
Collider-Accelerator Dept.
Building 911A
Upton, NY 11973-5000
ATTN: G. T. McIntyre

CUSTOMER P.O.
BNL-0000148742

CERTIFICATION DATE
6/18/2009

SHIP VIA
EMAIL & UPS

DESCRIPTION

Quantity:	1
Size:	6 1/8" x 11 1/2"
PO Line Item No.:	3 & 4
Drawing No.:	1242T00 130
Weld Type:	Butt
Weld Thicknesses:	0.330 / 0.330
Weld Angle from Norm:	N/A
Material Types:	RRR / NbTi
PQR No. (AES-Seq. No):	AES- EGUN-250
Material:	Niobium

BEND TEST:
APPLICABLE SPECIFICATIONS: ASME BPVC SECTION IX, 2007 EDITION, 2008a ADDENDA

Bend Type	**ROOT 1**	**ROOT 2**	**ROOT 3**
Specimen Thickness (Inches)	.330	.330	.330
Bend Through (Degrees)	180	180	180
Pin Diameter (Inches)	1.32	1.32	1.32
Bend Test Results	Satisfactory	Satisfactory	Satisfactory

BEND TEST:
APPLICABLE SPECIFICATIONS: ASME BPVC SECTION IX, 2007 EDITION, 2008a ADDENDA

Bend Type	**FACE 1**	**FACE 1**	**FACE 3**
Specimen Thickness (Inches)	.330	.330	.330
Bend Through (Degrees)	180	180	180
Pin Diameter (Inches)	1.320	1.320	1.320
Bend Test Results	Satisfactory	Satisfactory	Satisfactory

The services performed above were done in accordance with LTI's Quality System Program Manual Revision 18 dated 7/27/07 and ISO/IEC 17025. These results relate only to the items tested and this report shall not be reproduced, except in full, without the written approval of Laboratory Testing, Inc. L.T.I. is accredited by PRI to ISO17025 and by Nadcap for NDT and Materials Testing for the test methods and specific services as listed in the Scopes of Accreditation available at www.labtesting.com and www.eAuditNet.com. The results reported on this test report represent the actual attributes of the material tested and indicate full compliance with all applicable specification and contract requirements.

MERCURY CONTAMINATION: During the testing and inspection, the product did not come in direct contact with mercury or any of its compounds nor with any mercury containing devices employing a single boundary of containment.

NOTE: The recording of false, fictitious or fraudulent statements or entries on this document may be punishable as a felony under Federal Statutes.

Sherri L. Scheifele
QA Specialist

Sherri L Scheifele

By: _____
Authorized Signature

Electron Beam Welding Data Sheet

WO/ST No.: 001659	Seq. No. 250
Operation No.: 7&8	Sheet 1 of 1

Customer: Brookhaven National Lab.	Vendor used for welding: Advanced Energy Systems, Inc.
Date: 4/6/2009 — Charge Number: GC1292-001	Machine Type: Electron Beam Welder
Program Number: O346	Machine Serial Number: 636
Part Name: Bend Test Specimen	Gun Type: BK1.4: 1.4 mm FILA. V-STYLE
Part Number:1242T00130-5 — Rev. B — Qty. 1	Operator: Ted Matos
Serial Number: N/A	**Weld Description**
Sketch:	Specification Number: WPS-N-1-08
	Material 1: Nb55Ti .330x3.07x1.6 &.75&1.2
	Material 2: Nb RRR.250 .330x3.0x1.6&.75&1.2
	Weld Type: Full penetration Keyhole weld
	Joint Type: Butt
	Joint Thickness: .330
	Tooling
	Fixture Type: Holding plate
	Fixture Angle: 0
	Weld Cycle Data
	Vacuum Level: 2.8 x10 -5
	Ramp Up: n/a
	Over Lap: n/a
	Fade Out: n/a
	Cool down time in vacuum: 20 min.
	Back fill time to 20 Torr: n/a
	Cool down time at 20 Torr: n/a
	Temperature at atmosphere: 113.0

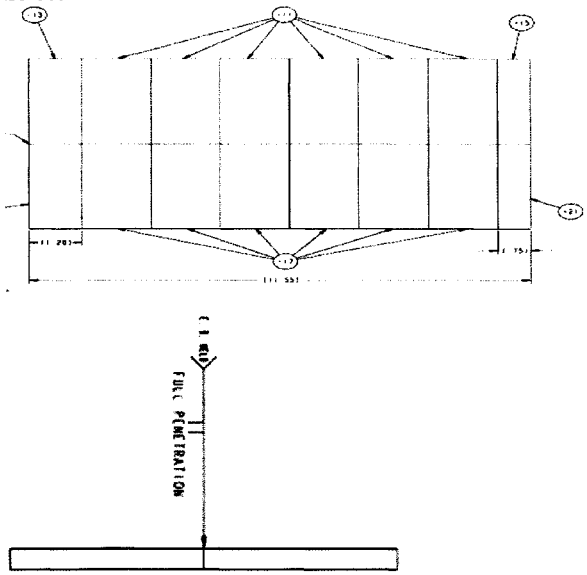

Penetration Requirements:	%	Depth (Inches)	Length
Spot Tack Weld			N/A
Stitch Tack Weld			
Seal Weld			N/A
Weld	100 %	.330 min.	N/A
Cosmetic Weld			N/A

Weld Type	Beam KV	Beam MA	Frequency Hz	Amplitude (X / Y)	Spot Size Inches	Welding Speed IN / MIN	Welding Speed SEC / REV	Defocus	Gun to work Distance
Tack Weld	140	3	n/a	X=n/a Y= n/a	X= n/a Y= n/a	30	n/a	- ½"	11"
Seal Weld	140	11	n/a	X= n/a Y= n/a	X= n/a Y= n/a	30	n/a	- ½"	11"
Weld	140	22	n/a	X= n/a Y= n/a	X= n/a Y= n/a	30	n/a	- ½"	11"
Cosmetic Weld				X= Y=	X= Y=				

Comments: "No fit up gap, No filler material and No Pre-heat of parts required" Surface of the was consistent Crown except at the intersection of each part. That had inconsistent surface to to it. That is where the parts are Going to get sliced apart. The under bead looked liked the top surface same comments about intersections.

Electron Beam Welding Data Sheet

WO/ST No.: 001660	Seq. No. 248
Operation No.:7 & 8	Sheet 1 of 1

Customer: Brookhaven National Lab.	Vendor used for welding: Advanced Energy Systems, Inc.
Date:4/2/2009 / Charge Number: GC1292-001	Machine Type: Electron Beam Welder
Program Number: 0346	Machine Serial Number: 636
Part Name: Bend test specimen	Gun Type: BK1.4 : 1.4 mm FILA. V-STYLE
Part Number:1242T00132-5 / Rev. B / Qty. 1	Operator: Ted Matos
Serial Number: N/A	**Weld Description**
Sketch:	Specification Number: WPS-N-1-08
	Material 1:Nb55Ti
	Material 2: Nb RRR>250
	Weld Type: Full Penetration keyhole weld
	Joint Type: interlocking
	Joint Thickness: .260
	Tooling
	Fixture Type: plate holder
	Fixture Angle: 0 degrees
	Weld Cycle Data
	Vacuum Level: 2.8x 10-5
	Ramp Up: N/A
	Over Lap: N/A
	Fade Out: N/A
	Cool down time in vacuum: 20 min.
	Back fill time to 20 Torr: N/A
	Cool down time at 20 Torr: N/A
	Temperature at atmosphere: 111.6

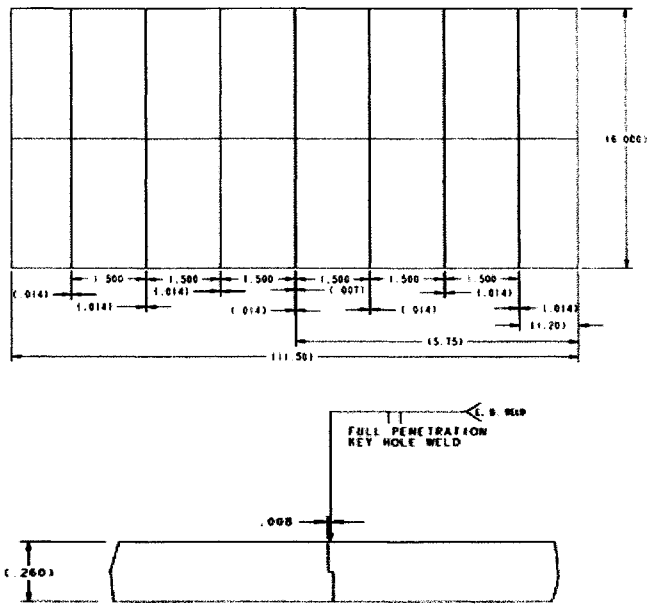

Penetration Requirements:	%	Depth (Inches)	Length
Spot Tack Weld			N/A
Stitch Tack Weld			
Seal Weld			N/A
Weld	100%	.260	N/A
Cosmetic Weld			N/A

Weld Type	Beam KV	Beam MA	Frequency Hz	Amplitude (X / Y)	Spot Size Inches	Welding Speed IN / MIN	Welding Speed SEC / REV	Defocus	Gun to work Distance
Tack Weld	140	3	N/A	X=N/A Y=N/A	X=.005 Y= .005	Manual		- ½ "	11"
Seal Weld	140	6	N/A	X=N/A Y=N/A	X= .005 Y= .005	30"		- ½"	11"
Weld	140	19	N/A	X=N/A Y=N/A	X= .005 Y= .005	30"		- ½"	11"
Cosmetic Weld				X= Y=	X= Y=				

Comments: "No fit up gap, No filler material and No Pre-heat of parts required" The weld surface looks consisten
The under bead looks consistent except at the intersections where each of the parts meet.

Certified Test Report

LABORATORY TESTING INC.
2331 Topaz Drive, Hatfield, PA 19440
Phone: 800-219-9095 ◆ Fax: 800-219-9096

BNL001-09-05-15980-23

Accredited Nadcap™
Materials Testing Laboratory
Nondestructive Testing

SOLD TO
Brookhaven National Laboratory
Collider-Accelerator Dept.
Building 911A
Upton, NY 11973-5000

SHIP TO
Brookhaven National Laboratory
Collider-Accelerator Dept.
Building 911A
Upton, NY 11973-5000
ATTN: G. T. McIntyre

CUSTOMER P.O.
BNL-0000148742

CERTIFICATION DATE
6/18/2009

SHIP VIA
EMAIL & UPS

DESCRIPTION

Quantity:	1
Size:	6 1/8" x 11 1/2"
PO Line Item No.:	3 & 4
Drawing No.:	1242T00 132
Weld Type:	Butt
Weld Thicknesses:	0.260 / 0.260
Weld Angle from Norm:	N/A
Material Types:	RRR / NbTi
PQR No. (AES-Seq. No):	AES- EGUN-248
Material:	Niobium

BEND TEST:
APPLICABLE SPECIFICATIONS: ASME BPVC SECTION IX, 2007 EDITION, 2008a ADDENDA

Bend Type	**ROOT 1**	**ROOT 2**	**ROOT 3**
Specimen Thickness (Inches)	.260	.260	.260
Bend Through (Degrees)	180	180	180
Pin Diameter (Inches)	1.04	1.04	1.04
Bend Test Results	Satisfactory	Satisfactory	Satisfactory

BEND TEST:
APPLICABLE SPECIFICATIONS: ASME BPVC SECTION IX, 2007 EDITION, 2008a ADDENDA

Bend Type	**FACE 1**	**FACE 2**	**FACE 3**
Specimen Thickness (Inches)	.260	.260	.260
Bend Through (Degrees)	180	180	180
Pin Diameter (Inches)	1.04	1.04	1.04
Bend Test Results	Satisfactory	Satisfactory	Satisfactory

The services performed above were done in accordance with LTI's Quality System Program Manual Revision 18 dated 7/27/07 and ISO/IEC 17025. These results relate only to the items tested and this report shall not be reproduced, except in full, without the written approval of Laboratory Testing, Inc. L.T.I. is accredited by PRI to ISO17025 and by Nadcap for NDT and Materials Testing for the test methods and specific services as listed in the Scopes of Accreditation available at www.labtesting.com and www.eAuditNet.com. The results reported on this test report represent the actual attributes of the material tested and indicate full compliance with all applicable specification and contract requirements.

MERCURY CONTAMINATION: During the testing and inspection, the product did not come in direct contact with mercury or any of its compounds nor with any mercury containing devices employing a single boundary of containment.

NOTE: The recording of false, fictitious or fraudulent statements or entries on this document may be punishable as a felony under Federal Statutes.

Sherri L. Scheifele
QA Specialist

Sherri L Scheifele

By: _____
Authorized Signature

Electron Beam Welding Data Sheet

WO/ST No.: 001629	Seq. No. 239
Operation No.: 6&7	Sheet 1 of 1

Customer: Brookhaven National Lab.	Vendor used for welding: Advance Energy Systems inc.
Date: 2/16/2009 / Charge Number: GC1292-001	Machine Type: Electron Beam Welder
Program Number: 0345	Machine Serial Number: 636
Part Name: Charpt-v-notch specimen plate	Gun Type:BK 1.4 mm fila. V-Style Ribbon
Part Number:1242T00121-5 / Rev. / Qty. 1	Operator: Ted Matos
Serial Number: N/A	**Weld Description**
Sketch: thickness .253	Specification Number: WPS-N-108
	Material 1: Niobium .253 thick
	Material 2: Niobium .253 thick
	Weld Type: full pen. with cosmetic pass
	Joint Type: interlock
	Joint Thickness: .253
	Tooling
	Fixture Type: test piece holder
	Fixture Angle: 0 degree
	Weld Cycle Data
	Vacuum Level: 2.0 x 10-5
	Ramp Up: N/A
	Over Lap: N/A
	Fade Out: N/A
	Cool down time in vacuum: 30 min.
	Back fill time to 20 Torr: 22 min.
	Cool down time at 20 Torr: 15 min.
	Temperature at atmosphere:

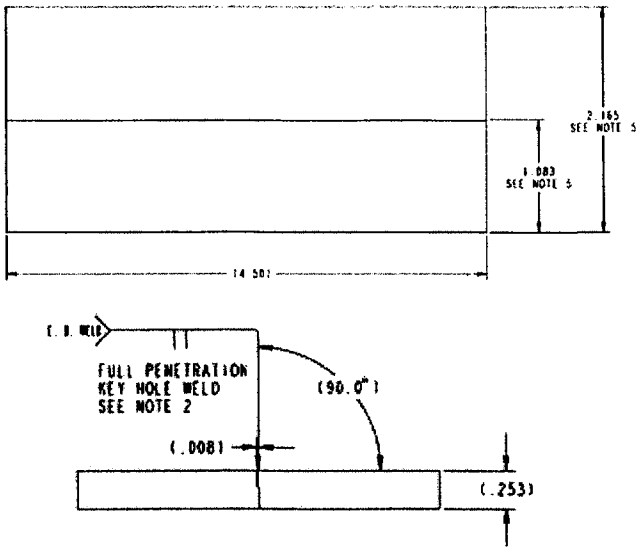

Align cross hairs .008 off joint

Penetration Requirements:	%	Depth (Inches)	Length
Spot Tack Weld			N/A
Stitch Tack Weld			
Seal Weld			N/A
Weld	100	.253	N/A
Cosmetic Weld			N/A

Weld Type	Beam kV	Beam mA	Frequency Hz	Amplitude (X / Y)	Spot Size Inches	Welding Speed IN / MIN	Welding Speed SEC / REV	Defocus	Gun to work Distance
Tack Weld	100	7	1000	X=2.5 Y= 2.5	X=.034 Y=.034	18	N/A	- ½"	11"
Weld Pass	100	47	1000	X=2.5 Y=2.5	X=.034 Y=.034	18	N/A	-1/2" (570)	11"
Cosmetic Pass	100	37	1000	X=2.5 Y=2.5	X= .034 Y=.034	18	N/A	+4 (610)	11"
				X= Y=	X= Y=				

Comments: "No fit up gap, No filler material and No Pre-heat of parts required" visual inspection good.

Certified Test Report

LABORATORY TESTING INC.
2331 Topaz Drive, Hatfield, PA 19440
Phone: 800-219-9095 ◆ Fax: 800-219-9096

BNL001-09-05-15980-14

Accredited Nadcap™
Materials Testing Laboratory
Nondestructive Testing

SOLD TO
Brookhaven National Laboratory
Collider-Accelerator Dept.
Building 911A
Upton, NY 11973-5000

SHIP TO
Brookhaven National Laboratory
Collider-Accelerator Dept.
Building 911A
Upton, NY 11973-5000
ATTN: G. T. McIntyre

CUSTOMER P.O.	CERTIFICATION DATE	SHIP VIA
BNL-0000148742	6/18/2009	EMAIL & UPS

DESCRIPTION

Quantity:	1
Size:	2 3/8" x 4 1/2"
PO Line Item No.:	5
Drawing No.:	1242T00 121
Weld Type:	Interlocking Butt
Weld Thicknesses:	0.253 / 0.253
Weld Angle from Norm:	N/A
Material Types:	RRR / RRR
PQR No. (AES-Seq. No):	AES- EGUN-239
Material:	Niobium

Charpy V-Notch Impact testing at -320° F (77 Kelvin) was performed on (1) set of the submitted Test Specimen in accordance with Customer's Instructions with the following results:

LOCATION	PIECE NO.	(FT-LBS.) ENERGY	(INCHES) LAT. EXP.	(%) SHEAR
	1	5	.009	5
CENTER WELD	2	4	.008	5
	3	4	.009	5

NOTE: Sub-size (6mm x 10mm) charpy specimens were used for above testing.

The services performed above were done in accordance with LTI's Quality System Program Manual Revision 18 dated 7/27/07 and ISO/IEC 17025. These results relate only to the items tested and this report shall not be reproduced, except in full, without the written approval of Laboratory Testing, Inc. L.T.I. is accredited by PRI to ISO17025 and by Nadcap for NDT and Materials Testing for the test methods and specific services as listed in the Scopes of Accreditation available at www.labtesting.com and www.eAuditNet.com. The results reported on this test report represent the actual attributes of the material tested and indicate full compliance with all applicable specification and contract requirements.

MERCURY CONTAMINATION: During the testing and inspection, the product did not come in direct contact with mercury or any of its compounds nor with any mercury containing devices employing a single boundary of containment.

NOTE: The recording of false, fictitious or fraudulent statements or entries on this document may be punishable as a felony under Federal Statutes.

Sherri L. Scheifele
QA Specialist

Sherri L Scheifele

By: _____
Authorized Signature

Electron Beam Welding Data Sheet

WO/ST No.: 001831	Seq. No. 255
Operation No.: 5 & 6	Sheet 1 of 1

Customer: Brookhaven National Lab.	Vendor used for welding: Advanced Energy Systems, Inc.
Date: 4/23/2009 | Charge Number: GC1292-001	Machine Type: Electron Beam Welder
Program Number: O345	Machine Serial Number: 636
Part Name: Charpt-v-notch specimen	Gun Type: BK1.4: 1.4 mm FILA. V-STYLE
Part Number: 1242T00122-5 | Rev. B | Qty. 1	Operator: Ted Matos
Serial Number: N/A	**Weld Description**
Sketch:	Specification Number: WPS-N-1-08
	Material 1:.335x1.35x4.5 Nb RRR
	Material 2: :.335x1.35x4.5 Nb RRR
	Weld Type: Keyhole Weld
	Joint Type: Butt
	Joint Thickness. .395
	Tooling
	Fixture Type: Plate holder
	Fixture Angle: 30 angle CNC = 60.00
	Weld Cycle Data
	Vacuum Level: 3.4 x 10 -5
	Ramp Up: N/A
	Over Lap: N/A
	Fade Out: N/A
	Cool down time in vacuum: left under vac.
	Back fill time to 20 Torr: over night
	Cool down time at 20 Torr: n/a
	Temperature at atmosphere: n/a

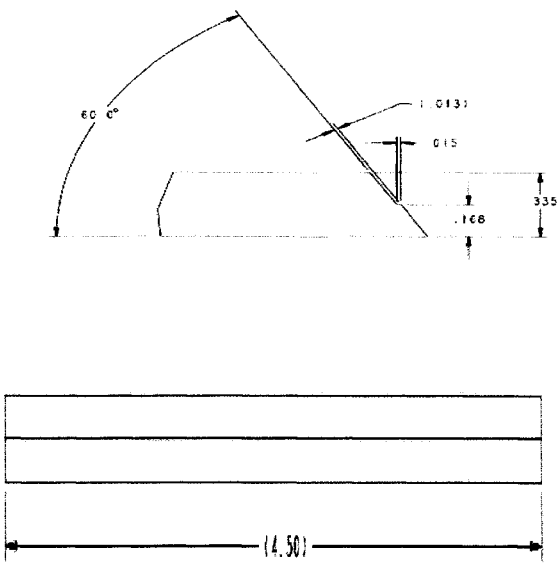

Penetration Requirements:	%	Depth (Inches)	Length
Spot Tack Weld			N/A
Stitch Tack Weld			
Seal Weld			N/A
Weld	100%	.300 min.	N/A
Cosmetic Weld			N/A

Weld Type	Beam KV	Beam MA	Frequency Hz	Amplitude (X / Y)	Spot Size Inches	Welding Speed IN / MIN	Welding Speed SEC / REV	Defocus	Gun to work Distance
Tack Weld	110	3	1000	X=1.0 Y=1.0	X= .020 Y= .020	15"	N/A	-1"	11"
Seal Weld	N/A	N/A	N/A	X= N/A Y= N/A	X= N/A Y= N/A	N/A	N/A	N/A	N/A
Weld	110	50	1000	X=1.0 Y=1.0	X=.020 Y= .020	15"	N/A	-1"	11"
Cosmetic Weld				X= Y=	X= Y=				

Comments: "No fit up gap, No filler material and No Pre-heat of parts required" offset ".013"on to male side.
Visual was good the surface had a slight positive crown and the under side had light pop through length of pc.

Certified Test Report

LABORATORY TESTING INC.
2331 Topaz Drive, Hatfield, PA 19440
Phone: 800-219-9095 • Fax: 800-219-9096

BNL001-09-05-15980-15

Accredited Nadcap™
Materials Testing Laboratory
Nondestructive Testing

SOLD TO
Brookhaven National Laboratory
Collider-Accelerator Dept.
Building 911A
Upton, NY 11973-5000

SHIP TO
Brookhaven National Laboratory
Collider-Accelerator Dept.
Building 911A
Upton, NY 11973-5000
ATTN: G. T. McIntyre

CUSTOMER P.O.	CERTIFICATION DATE	SHIP VIA
BNL-0000148742	6/18/2009	EMAIL & UPS

DESCRIPTION

Quantity: 1
Size: 2 3/8" x 4 1/2"
PO Line Item No.: 5
Drawing No.: 1242T00 122
Weld Type: Angle Interlocking Butt
Weld Thicknesses: 0.165 / 0.335
Weld Angle from Norm: 30 Degrees
Material Types: RRR / RRR
PQR No. (AES-Seq. No: AES- EGUN-255
Material: Niobium

Charpy V-Notch Impact testing at -320° F (77 Kelvin) was performed on (1) set of the submitted Test Specimen in accordance with Customer's Instructions with the following results:

LOCATION	PIECE NO.	(FT-LBS.) ENERGY	(INCHES) LAT. EXP.	(%) SHEAR
	1	4	.006	5
CENTER WELD	2	4	.008	5
	3	4	.005	5

NOTE: Sub-size (8mm x 10mm) charpy specimens were used for above testing.

The services performed above were done in accordance with LTI's Quality System Program Manual Revision 18 dated 7/27/07 and ISO/IEC 17025. These results relate only to the items tested and this report shall not be reproduced, except in full, without the written approval of Laboratory Testing, Inc. L.T.I. is accredited by PRI to ISO17025 and by Nadcap for NDT and Materials Testing for the test methods and specific services as listed in the Scopes of Accreditation available at www.labtesting.com and www.eAuditNet.com. The results reported on this test report represent the actual attributes of the material tested and indicate full compliance with all applicable specification and contract requirements.

MERCURY CONTAMINATION: During the testing and inspection, the product did not come in direct contact with mercury or any of its compounds nor with any mercury containing devices employing a single boundary of containment.

NOTE: The recording of false, fictitious or fraudulent statements or entries on this document may be punishable as a felony under Federal Statutes.

Sherri L. Scheifele
QA Specialist

Sherri L Scheifele

By: _____
Authorized Signature

Electron Beam Welding Data Sheet

WO/ST No.: 001631	Seq. No.244-1
Operation No.: 5 & 6	Sheet 1 of 2

Customer: Brookhaven National Lab.	Vendor used for welding: Advanced Energy Systems, Inc.
Date: 2/23/2009 | Charge Number: GC1292	Machine Type: Electron Beam Welder
Program Number: O345	Machine Serial Number:636
Part Name: Charpy V-Notch Specimen	Gun Type: BK 1.4 mm fil. V-style ribbon
Part Number:1292G000123-5 | Rev. | Qty. 1	Operator: Ted Matos
Serial Number: N/A	**Weld Description**
Sketch:	Specification Number: WPS-N-1-08
	Material 1: Niobium .157
	Material 2: Niobium .157
	Weld Type: Keyhole weld
	Joint Type: Interlocking angular
	Joint Thickness: .167
	Tooling
	Fixture Type: test piece holder
	Fixture Angle: 19. 5 degree
	Weld Cycle Data
	Vacuum Level: 3.0 x10 -5
	Ramp Up: N/A
	Over Lap: N/A
	Fade Out: N/A
	Cool down time in vacuum: 30 min.
	Back fill time to 20 Torr: 22 min.
	Cool down time at 20 Torr: 15 min.
	Temperature at atmosphere: 95 .0

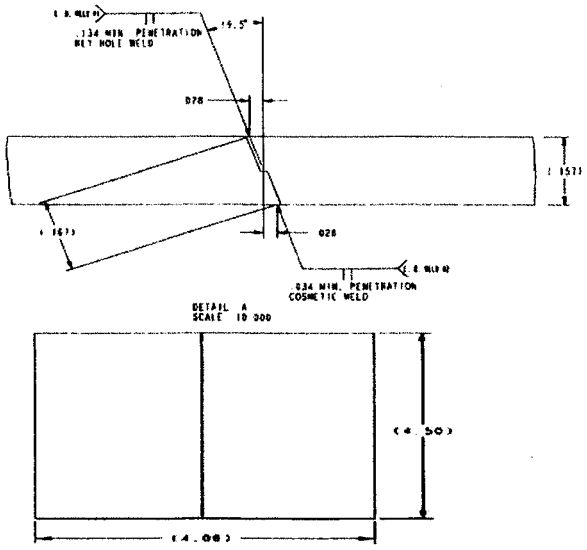

Penetration Requirements:	%	Depth (Inches)	Length
Spot Tack Weld			N/A
Stitch Tack Weld			
Seal Weld			N/A
Weld	80	.138(min.)	N/A
Cosmetic Weld			N/A

Weld Type	Beam KV	Beam MA	Frequency Hz	Amplitude (X / Y)	Spot Size Inches	Welding Speed IN / MIN	Welding Speed SEC / REV	Defocus	Gun to work Distance
Tack Weld	100	7	1000	X=2.5 Y=2.5	X=.034 Y= .034	18	N/A	-1/2"	11
Weld Pass	100	25	1000	X=2.5 Y=2.5	X= .034 Y= .034	18	N/A	-1/2 "	11
Cosmetic pass	N/A	N/A	N/A	N/A N/A	N/A N/A	N/A	N/A	N/A	N/A
				X= Y=	X= Y=				

Comments: "No fit up gap, No filler material and No Pre-heat of parts required" visual inspection of weld Was good.

Electron Beam Welding Data Sheet

WO/ST No.: 001631	Seq. No.244-2
Operation No.: 5 & 6	Sheet 2 of 2

Customer: Brookhaven National Lab.	Vendor used for welding: Advanced Energy Systems, Inc.
Date: 2/23/2009 | Charge Number: GC1292	Machine Type: Electron Beam Welder
Program Number: O345	Machine Serial Number:636
Part Name: Charpy V-Notch Specimen	Gun Type: BK 1.4 mm fil. V-style ribbon
Part Number:1292G000123-5 | Rev. | Qty. 1	Operator: Ted Matos
Serial Number: N/A	**Weld Description**
Sketch:	Specification Number: WPS-N-1-08
	Material 1: Niobium .157
	Material 2: Niobium .157
	Weld Type: Keyhole weld
	Joint Type: Interlocking angular
	Joint Thickness: .167
	Tooling
	Fixture Type: test piece holder
	Fixture Angle: 19. 5 degree
	Weld Cycle Data
	Vacuum Level: 3.0 x10 -5
	Ramp Up: N/A
	Over Lap: N/A
	Fade Out: N/A
	Cool down time in vacuum: 30 min.
	Back fill time to 20 Torr: 22 min.
	Cool down time at 20 Torr: 15 min.
	Temperature at atmosphere: 95 .0

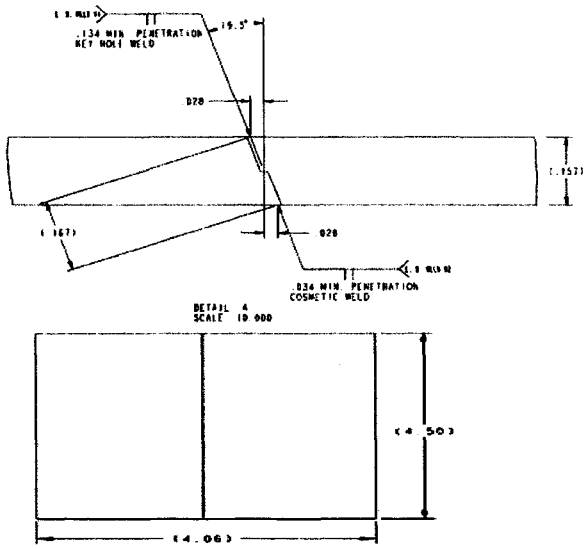

Penetration Requirements:	%	Depth (Inches)	Length
Spot Tack Weld			N/A
Stitch Tack Weld			
Seal Weld			N/A
Weld	20	.033(min.)	N/A
Cosmetic Weld			N/A

Weld Type	Beam KV	Beam MA	Frequency Hz	Amplitude (X / Y)	Spot Size Inches	Welding Speed IN / MIN	Welding Speed SEC / REV	Defocus	Gun to work Distance
Tack Weld	N/A	N/A	N/A	N/A N/A	N/A N/A	N/A	N/A	N/A	N/A
Weld Pass	N/A	N/A	N/A	N/A N/A	N/A N/A	N/A	N/A	N/A	N/A
"RF" pass	100	25	1000	X=3.5 Y=3.5	X=.040 Y=.040	18	N/A	+4 (670)	11
				X= Y=	X= Y=				

Comments: "No fit up gap, No filler material and No Pre-heat of parts required" visual inspection of weld Was good.

Certified Test Report

LABORATORY TESTING INC.
2331 Topaz Drive, Hatfield, PA 19440
Phone: 800-219-9095 ◆ Fax: 800-219-9096

BNL001-09-05-15980-16

Accredited Nadcap™
Materials Testing Laboratory
Nondestructive Testing

SOLD TO
Brookhaven National Laboratory
Collider-Accelerator Dept.
Building 911A
Upton, NY 11973-5000

SHIP TO
Brookhaven National Laboratory
Collider-Accelerator Dept.
Building 911A
Upton, NY 11973-5000
ATTN: G. T. McIntyre

CUSTOMER P.O.	CERTIFICATION DATE	SHIP VIA
BNL-0000148742	6/18/2009	EMAIL & UPS

DESCRIPTION

Quantity:	1
Size:	2 3/8" x 4 1/2"
PO Line Item No.:	5
Drawing No.:	1242T00 123
Weld Type:	Angle Interlocking Butt
Weld Thicknesses:	0.157 / 0.157
Weld Angle from Norm:	19.5 Degrees
Material Types:	RRR / RRR
PQR No. (AES-Seq. No):	AES- EGUN-244
Material:	Niobium

Charpy V-Notch Impact testing at -320° F (Kelvin) was performed on (1) set of the submitted Test Specimen in accordance with Customer's Instructions with the following results:

LOCATION	PIECE NO.	(FT-LBS.) ENERGY	(INCHES) LAT. EXP.	(%) SHEAR
	1	1	.003	5
CENTER WELD	**2**	1	.004	5
	3	1	.002	5

NOTE: Sub-size (3.3mm x 10mm) charpy specimens were used for above testing.

The services performed above were done in accordance with LTI's Quality System Program Manual Revision 18 dated 7/27/07 and ISO/IEC 17025. These results relate only to the items tested and this report shall not be reproduced, except in full, without the written approval of Laboratory Testing, Inc. L.T.I. is accredited by PRI to ISO17025 and by Nadcap for NDT and Materials Testing for the test methods and specific services as listed in the Scopes of Accreditation available at www.labtesting.com and www.eAuditNet.com. The results reported on this test report represent the actual attributes of the material tested and indicate full compliance with all applicable specification and contract requirements.

MERCURY CONTAMINATION: During the testing and inspection, the product did not come in direct contact with mercury or any of its compounds nor with any mercury containing devices employing a single boundary of containment.

NOTE: The recording of false, fictitious or fraudulent statements or entries on this document may be punishable as a felony under Federal Statutes.

Sherri L. Scheifele
QA Specialist

Sherri L. Scheifele

By: _____
Authorized Signature

Electron Beam Welding Data Sheet

WO/ST No.: 001632	Seq. No. 251
Operation No.: 6&7	Sheet 1 of 1

Customer: Brookhaven National Lab.	Vendor used for welding: Advanced Energy Systems, Inc.
Date:4/6/2009 / Charge Number: GC1292-001	Machine Type: Electron Beam Welder
Program Number: 0345	Machine Serial Number: 636
Part Name: Charpt-v-Notch Specimen	Gun Type: BK1.4: 1.4 mm FILA. V-STYLE
Part Number: 1241T00124-5 / Rev. A / Qty.	Operator: Ted Matos
Serial Number: N/A	**Weld Description**
Sketch:	Specification Number: WPS-N-1-08
	Material 1:Nb55Ti .375x1.25x4.50
	Material 2: Nb RRR>250 .375x1.25x4.50
	Weld Type: Full penetration Keyhole weld
	Joint Type: Butt
	Joint Thickness: .375
	Tooling
	Fixture Type: Holding plate
	Fixture Angle: 0
	Weld Cycle Data
	Vacuum Level: 2.8 x 1. -5
	Ramp Up: n/a
	Over Lap: n/a
	Fade Out: n/a
	Cool down time in vacuum: 20 min.
	Back fill time to 20 Torr: n/a
	Cool down time at 20 Torr: n/a
	Temperature at atmosphere: 113.0

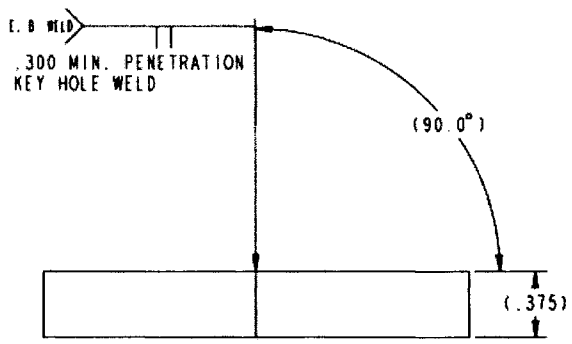

Penetration Requirements:	%	Depth (Inches)	Length
Spot Tack Weld			N/A
Stitch Tack Weld			
Seal Weld			N/A
Weld	100 %	.375 min.	N/A
Cosmetic Weld			N/A

Weld Type	Beam KV	Beam MA	Frequency Hz	Amplitude (X / Y)	Spot Size Inches	Welding Speed IN / MIN	Welding Speed SEC / REV	Defocus	Gun to work Distance
Tack Weld	140	3	N/A	X= N/A Y= N/A	X= N/A Y= N/A	30"	N/A N/A	- ½"	11"
Seal Weld	140	11	N/A	X= N/A Y= N/A	X= N/A Y= N/A	30"	N/A N/A	- ½"	11"
Weld	140	22	N/A	X= N/A Y= N/A	X= N/A Y= N/A	30"	N/A	- ½"	11"
Cosmetic Weld				X= Y=	X= Y=				

Comments: "No fit up gap, No filler material and No Pre-heat of parts required" The Surface weld looked good The under bead wasn't a consistent crown liked the other two weld specimens, This one was a consistent very light Pop through the length of the weld. Just realized that this piece is different thickness than the other pieces with It. That's why it was a different result it still show a consistently light pop through .

Certified Test Report

LABORATORY TESTING INC.
2331 Topaz Drive, Hatfield, PA 19440
Phone: 800-219-9095 • Fax: 800-219-9096

BNL001-09-05-15980-17

Accredited Nadcap™
Materials Testing Laboratory
Nondestructive Testing

SOLD TO
Brookhaven National Laboratory
Collider-Accelerator Dept.
Building 911A
Upton, NY 11973-5000

SHIP TO
Brookhaven National Laboratory
Collider-Accelerator Dept.
Building 911A
Upton, NY 11973-5000
ATTN: G. T. McIntyre

CUSTOMER P.O.	CERTIFICATION DATE	SHIP VIA
BNL-0000148742	6/18/2009	EMAIL & UPS

DESCRIPTION

Quantity:	1
Size:	2 3/8" x 4 1/2"
PO Line Item No.:	5
Drawing No.:	1242T00 124
Weld Type:	Butt
Weld Thicknesses:	0.330 / 0.330
Weld Angle from Norm:	N/A
Material Types:	RRR / NbTi
PQR No. (AES-Seq. No):	AES- EGUN-251
Material:	Niobium

Charpy V-Notch Impact testing at -320° F (77 Kelvin) was performed on (1) set of the submitted Test Specimen in accordance with Customer's Instructions with the following results:

LOCATION	PIECE NO.	(FT-LBS.) ENERGY	(INCHES) LAT. EXP.	(%) SHEAR
	1	4	.004	5
CENTER WELD	2	4	.005	5
	3	4	.004	5

NOTE: Sub-size (7mm x 10mm) charpy specimens were used for above testing.

The services performed above were done in accordance with LTI's Quality System Program Manual Revision 18 dated 7/27/07 and ISO/IEC 17025. These results relate only to the items tested and this report shall not be reproduced, except in full, without the written approval of Laboratory Testing, Inc. L.T.I. is accredited by PRI to ISO17025 and by Nadcap for NDT and Materials Testing for the test methods and specific services as listed in the Scopes of Accreditation available at www.labtesting.com and www.eAuditNet.com. The results reported on this test report represent the actual attributes of the material tested and indicate full compliance with all applicable specification and contract requirements.

MERCURY CONTAMINATION: During the testing and inspection, the product did not come in direct contact with mercury or any of its compounds nor with any mercury containing devices employing a single boundary of containment.

NOTE: The recording of false, fictitious or fraudulent statements or entries on this document may be punishable as a felony under Federal Statutes.

Sherri L. Scheifele
QA Specialist

Sherri L Scheifele

By: _____
Authorized Signature

Electron Beam Welding Data Sheet

WO/ST No.: 001633	Seq. No. 253
Operation No.: 5 & 6	Sheet 1 of 1

Customer: Brookhaven National Lab.	Vendor used for welding: Advanced Energy Systems, Inc.
Date: 04/16/2009 | Charge Number: GC1292-001	Machine Type: Electron Beam Welder
Program Number:O345	Machine Serial Number: 636
Part Name: Charpt-v-Notch specimen	Gun Type: BK1.4: 1.4 mm FILA. V-STYLE
Part Number: 1242T00125-5 | Rev. A | Qty. 1	Operator: Ted Matos
Serial Number: N/A	**Weld Description**
Sketch:	Specification Number: WPS-N-1-08
	Material 1: .375x1.25x4.5 Nb55Ti
	Material 2: .375x1.25x4.5 Nb55Ti
	Weld Type: keyhole weld full penetration
	Joint Type: butt
	Joint Thickness:.375
	Tooling
	Fixture Type: Plate holder
	Fixture Angle: no angle
	Weld Cycle Data
	Vacuum Level: 3.0 x10-5
	Ramp Up: N/A
	Over Lap: N/A
	Fade Out: N/A
	Cool down time in vacuum: over night
	Back fill time to 20 Torr: N/A
	Cool down time at 20 Torr: N/A
	Temperature at atmosphere: N/A

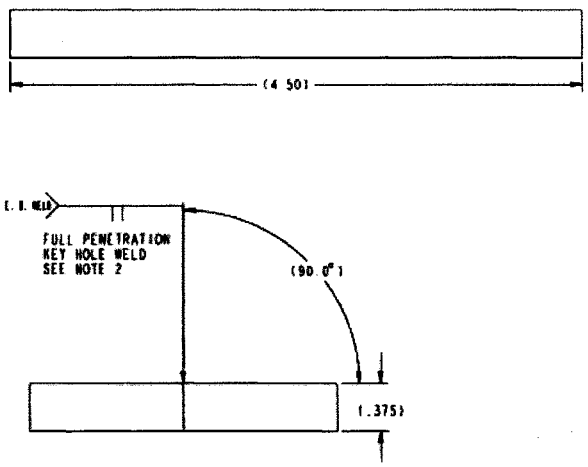

Penetration Requirements:	%	Depth (Inches)	Length
Spot Tack Weld			N/A
Stitch Tack Weld			
Seal Weld			N/A
Weld	100 %	.375	N/A
Cosmetic Weld			N/A

Weld Type	Beam KV	Beam MA	Frequency Hz	Amplitude (X / Y)	Spot Size Inches	Welding Speed IN / MIN	Welding Speed SEC / REV	Defocus	Gun to work Distance
Tack Weld	100	3	N/A	X= N/A Y= N/A	X= N/A Y= N/A	15	N/A	+2	11
Seal Weld	100	11	N/A	X= N/A Y= N/A	X= N/A Y= N/A	15	N/A	+2	11
Weld	100	23	N/A	X= N/A Y= N/A	X= N/A Y= N/A	15	N/A	+2	11
Cosmetic Weld				X= Y=	X= Y=				

Comments: "No fit up gap, No filler material and No Pre-heat of parts required" weld had 100% melt through The whole length of the part.

Certified Test Report

LABORATORY TESTING INC.
2331 Topaz Drive, Hatfield, PA 19440
Phone: 800-219-9095 • Fax: 800-219-9096

BNL001-09-05-15980-18

Accredited Nadcap™
Materials Testing Laboratory
Nondestructive Testing

SOLD TO
Brookhaven National Laboratory
Collider-Accelerator Dept.
Building 911A
Upton, NY 11973-5000

SHIP TO
Brookhaven National Laboratory
Collider-Accelerator Dept.
Building 911A
Upton, NY 11973-5000
ATTN: G. T. McIntyre

CUSTOMER P.O.	CERTIFICATION DATE	SHIP VIA
BNL-0000148742	6/18/2009	EMAIL & UPS

DESCRIPTION

Quantity:	1
Size:	2 3/8" x 4 1/2"
PO Line Item No.:	5
Drawing No.:	1242T00 125
Weld Type:	Butt
Weld Thicknesses:	0.375 / 0.313
Weld Angle from Norm:	N/A
Material Types:	NbTi / NbTi
PQR No. (AES-Seq. No):	AES- EGUN-253
Material:	Niobium

Charpy V-Notch Impact testing at -320° F (77 Kelvin) was performed on (1) set of the submitted Test Specimen in accordance with Customer's Instructions with the following results:

LOCATION	PIECE NO.	(FT-LBS.) ENERGY	(INCHES) LAT. EXP.	(%) SHEAR
	1	40	.026	20
CENTER WELD	2	50	.034	30
	3	47	.031	30

NOTE: Sub-size (9mm x 10mm) charpy specimens were used for above testing.

The services performed above were done in accordance with LTI's Quality System Program Manual Revision 18 dated 7/27/07 and ISO/IEC 17025. These results relate only to the items tested and this report shall not be reproduced, except in full, without the written approval of Laboratory Testing, Inc. L.T.I. is accredited by PRI to ISO17025 and by Nadcap for NDT and Materials Testing for the test methods and specific services as listed in the Scopes of Accreditation available at www.labtesting.com and www.eAuditNet.com. The results reported on this test report represent the actual attributes of the material tested and indicate full compliance with all applicable specification and contract requirements.

MERCURY CONTAMINATION: During the testing and inspection, the product did not come in direct contact with mercury or any of its compounds nor with any mercury containing devices employing a single boundary of containment.

NOTE: The recording of false, fictitious or fraudulent statements or entries on this document may be punishable as a felony under Federal Statutes.

Sherri L. Scheifele
QA Specialist

Sherri L Scheifele

By: _____
Authorized Signature

Electron Beam Welding Data Sheet

WO/ST No.: 001635	Seq. No. 238
Operation No.: 5 &6	Sheet 1 of 1

Customer: Brookhaven National Lab.	Vendor used for welding: Advanced Energy Systems, Inc.
Date: 2/10/2009 | Charge Number: 1292GC00102	Machine Type: Electron Beam welder
Program Number: 0345	Machine Serial Number: 636
Part Name: Charpt-V- Notch specimen	Gun Type: BK 1.4 mm fil. V-Style Ribbon
Part Number:1242T00133-5 | Rev.n/a | Qty. 1	Operator: Ted Matos
Serial Number: N/A	**Weld Description**
Sketch:	Specification Number: WPS-N-1_08
	Material 1: niobium .118 thick
	Material 2: niobium .118 thick
	Weld Type: Full pen. with cosmetic pass
	Joint Type: interlock
	Joint Thickness: .121
	Tooling
	Fixture Type: test piece holder
	Fixture Angle: 13 degree
	Weld Cycle Data
	Vacuum Level: 2.4 x 10-5
	Ramp Up: N/A
	Over Lap: N/A
	Fade Out: N/A
	Cool down time in vacuum: 30 min.
	Back fill time to 20 Torr: 22 min.
	Cool down time at 20 Torr: 15 min.
	Temperature at atmosphere: 99.0

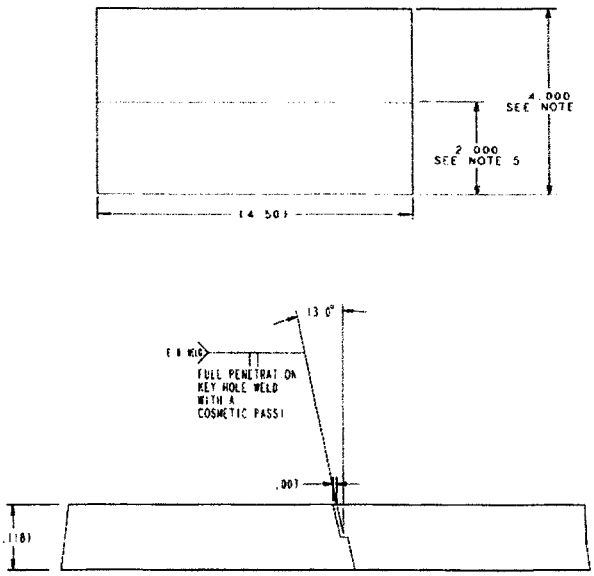

Penetration Requirements:	%	Depth (Inches)	Length
Spot Tack Weld			N/A
Stitch Tack Weld			
Seal Weld			N/A
Weld	100	.121	N/A
Cosmetic Weld			N/A

Weld Type	Beam kV	Beam mA	Frequency Hz	Amplitude (X / Y)	Spot Size Inches	Welding Speed IN / MIN	Welding Speed SEC / REV	Defocus	Gun to work Distance
Tack Weld	100	7	1000	X=.3 Y=.3	X=.009 Y=.009	18	N/A	- ½"	11
Weld Pass	100	18	1000	X=.3 Y=.3	X=.009 Y=.009	18	N/A	-1/2 " (570)	11
Cosmetic Pass	100	18	1000	X=.3 Y=.3	X= .009 Y=.009	18	N/A	+4" (610)	11
				X= Y=	X= Y=				

Comments: Parts were weld with no .007 offset, The fade out seemed to be slightly on edge of joint. Sectioned Etched and the whole joint was consumed by the weld.
"No fit up gap, No filler material and No Pre-heat of parts required"

Certified Test Report

LABORATORY TESTING INC.
2331 Topaz Drive, Hatfield, PA 19440
Phone: 800-219-9095 • Fax: 800-219-9096

BNL001-09-05-15980-24

Accredited Nadcap™
Materials Testing Laboratory
Nondestructive Testing

SOLD TO
Brookhaven National Laboratory
Collider-Accelerator Dept.
Building 911A
Upton, NY 11973-5000

SHIP TO
Brookhaven National Laboratory
Collider-Accelerator Dept.
Building 911A
Upton, NY 11973-5000
ATTN: G. T. McIntyre

CUSTOMER P.O.	CERTIFICATION DATE	SHIP VIA
BNL-0000148742	6/18/2009	EMAIL & UPS

DESCRIPTION

Quantity: 1
Size: 2 3/8" x 4 1/2"
PO Line Item No.: 5
Drawing No.: 1242T00 133
Weld Type: Angle Interlocking Butt
Weld Thicknesses: 0.118 / 0.118
Weld Angle from Norm: 13 Degrees
Material Types: RRR / RRR
PQR No. (AES-Seq. No): AES- EGUN-238
Material: Niobium

Charpy V-Notch Impact testing at -320° F (77 Kelvin) was performed on (1) set of the submitted Test Specimen in accordance with Customer's Instructions with the following results:

LOCATION	PIECE NO.	(FT-LBS.) ENERGY	(INCHES) LAT. EXP.	(%) SHEAR
	1	1	.002	5
CENTER WELD	2	1	.002	5
	3	1	.002	5

NOTE: Sub-size (2.5mm x 10mm) charpy specimens were used for above testing.

The services performed above were done in accordance with LTI's Quality System Program Manual Revision 18 dated 7/27/07 and ISO/IEC 17025. These results relate only to the items tested and this report shall not be reproduced, except in full, without the written approval of Laboratory Testing, Inc. L.T.I. is accredited by PRI to ISO17025 and by Nadcap for NDT and Materials Testing for the test methods and specific services as listed in the Scopes of Accreditation available at www.labtesting.com and www.eAuditNet.com. The results reported on this test report represent the actual attributes of the material tested and indicate full compliance with all applicable specification and contract requirements.

MERCURY CONTAMINATION: During the testing and inspection, the product did not come in direct contact with mercury or any of its compounds nor with any mercury containing devices employing a single boundary of containment.

NOTE: The recording of false, fictitious or fraudulent statements or entries on this document may be punishable as a felony under Federal Statutes.

Sherri L. Scheifele
QA Specialist

Sherri L Scheifele

By: _____
Authorized Signature

Electron Beam Welding Data Sheet

WO/ST No.: 001661	Seq. No. 240
Operation No.: 6&7	Sheet 1 of 1

Customer: Brookhaven National Lab.		
Date: 2/17/2009	Charge Number: GC1292-001	
Program Number: 0346		
Part Name: Bend Test specimen plate		
Part Number:1242T00134-5	Rev. A	Qty. 1
Serial Number: N/A		

Sketch: thickness .253

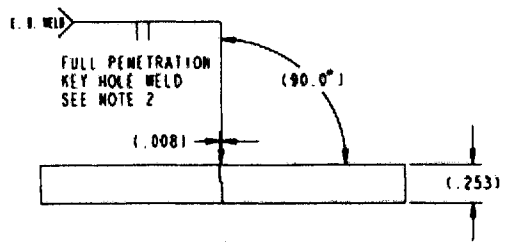

Align cross hairs .008 off joint

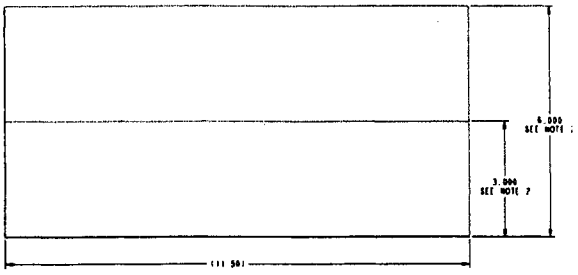

Vendor used for welding: Advance Energy Systems inc.
Machine Type: Electron Beam Welder
Machine Serial Number: 636
Gun Type: BK1.4 mm fil. V-Style Ribbon
Operator: Ted Matos
Weld Description
Specification Number: WPS-N-108
Material 1: Niobium .253 thick
Material 2: Niobium .253 thick
Weld Type: full pen. with cosmetic pass
Joint Type: interlock
Joint Thickness: .253
Tooling
Fixture Type: test piece holder
Fixture Angle: 0 degree
Weld Cycle Data
Vacuum Level: 2.0 x 10-5
Ramp Up: N/A
Over Lap: N/A
Fade Out: N/A
Cool down time in vacuum: 75 min.
Back fill time to 20 Torr:N/A
Cool down time at 20 Torr: 15 min.
Temperature at atmosphere: 117.5

Penetration Requirements:	%	Depth (Inches)	Length
Spot Tack Weld			N/A
Stitch Tack Weld			
Seal Weld			N/A
Weld	100	.253	N/A
Cosmetic Weld			N/A

Weld Type	Beam kV	Beam mA	Frequency Hz	Amplitude (X / Y)	Spot Size Inches	Welding Speed IN / MIN	Welding Speed SEC / REV	Defocus	Gun to work Distance
Tack Weld	100	7	1000	X=2.5	X=.034	18	N/A	- ½"	11"
				Y= 2.5	Y=.034				
Weld Pass	100	47	1000	X=2.5	X=.034	18	N/A	-1/2" (570)	11"
				Y=2.5	Y=.034				
Cosmetic Pass	100	37	1000	X=2.5	X= .034	18	N/A	+4 (610)	11"
				Y=2.5	Y=.034				
				X=	X=				
				Y=	Y=				

Comments: Manual tacking at intersection of each small piece. We vented the chamber had a challenge aligning Pieces. Visual inspection good.

"No fit up gap, No filler material and No Pre-heat of parts required"

Certified Test Report

LABORATORY TESTING INC.
2331 Topaz Drive, Hatfield, PA 19440
Phone: 800-219-9095 • Fax: 800-219-9096

BNL001-09-05-15980-25

Accredited Nadcap™
Materials Testing Laboratory
Nondestructive Testing

SOLD TO
Brookhaven National Laboratory
Collider-Accelerator Dept.
Building 911A
Upton, NY 11973-5000

SHIP TO
Brookhaven National Laboratory
Collider-Accelerator Dept.
Building 911A
Upton, NY 11973-5000
ATTN: G. T. McIntyre

CUSTOMER P.O.	CERTIFICATION DATE	SHIP VIA
BNL-0000148742	6/18/2009	EMAIL & UPS

DESCRIPTION

Quantity:	1
Size:	6 1/8" x 11 1/2"
PO Line Item No.:	3 & 4
Drawing No.:	1242T00 134
Weld Type:	Interlocking Butt
Weld Thicknesses:	0.253 / 0.253
Weld Angle from Norm:	N/A
Material Types:	RRR / RRR
PQR No. (AES-Seq. No):	AES- EGUN-240
Material:	Niobium

BEND TEST:
APPLICABLE SPECIFICATIONS: ASME BPVC, SECTION IX, 2007 EDITION, 2008a ADDENDA

Bend Type	ROOT 1	ROOT 2	ROOT 3
Specimen Thickness (Inches)	.253	.253	.253
Bend Through (Degrees)	180	180	180
Pin Diameter (Inches)	1.012	1.012	1.012
Bend Test Results	Satisfactory	Satisfactory	Satisfactory

BEND TEST:
APPLICABLE SPECIFICATIONS: ASME BPVC, SECTION IX, 2007 EDITION, 2008a ADDENDA

Bend Type	FACE 1	FACE 2	FACE 3
Specimen Thickness (Inches)	.253	.253	.253
Bend Through (Degrees)	180	180	180
Pin Diameter (Inches)	1.012	1.012	1.012
Bend Test Results	Satisfactory	Satisfactory	Satisfactory

The services performed above were done in accordance with LTI's Quality System Program Manual Revision 18 dated 7/27/07 and ISO/IEC 17025. These results relate only to the items tested and this report shall not be reproduced, except in full, without the written approval of Laboratory Testing, Inc. L.T.I. is accredited by PRI to ISO17025 and by Nadcap for NDT and Materials Testing for the test methods and specific services as listed in the Scopes of Accreditation available at www.labtesting.com and www.eAuditNet.com. The results reported on this test report represent the actual attributes of the material tested and indicate full compliance with all applicable specification and contract requirements.

MERCURY CONTAMINATION: During the testing and inspection, the product did not come in direct contact with mercury or any of its compounds nor with any mercury containing devices employing a single boundary of containment.

NOTE: The recording of false, fictitious or fraudulent statements or entries on this document may be punishable as a felony under Federal Statutes.

Sherri L. Scheifele
QA Specialist

Sherri L Scheifele

By: _____
Authorized Signature

Certified Test Report

LABORATORY TESTING INC.
2331 Topaz Drive, Hatfield, PA 19440
Phone: 800-219-9095 • Fax: 800-219-9096

BNL001-09-05-15980-26

Accredited Nadcap™
Materials Testing Laboratory
Nondestructive Testing

SOLD TO
Brookhaven National Laboratory
Collider-Accelerator Dept.
Building 911A
Upton, NY 11973-5000

SHIP TO
Brookhaven National Laboratory
Collider-Accelerator Dept.
Building 911A
Upton, NY 11973-5000
ATTN: G. T. McIntyre

CUSTOMER P.O.
BNL-0000148742

CERTIFICATION DATE
6/18/2009

SHIP VIA
EMAIL & UPS

DESCRIPTION

Quantity: 1
Size: 1 3/16" x 4 1/2"
PO Line Item No.: 5
Drawing No.: 1242T00 126
Weld Type: No welding - material sample

Charpy V-Notch Impact testing at -320° F (77 Kelvin) was performed on (1) set of the submitted Test Specimen in accordance with Customer's Instructions with the following results:

LOCATION	PIECE NO.	(FT-LBS.) ENERGY	(INCHES) LAT. EXP.	(%) SHEAR
	1	3	.004	5
BASE METAL	2	3	.004	5
	3	2	.003	5

NOTE: Sub-size (9mm x 10mm) charpy specimens were used for above testing.

The services performed above were done in accordance with LTI's Quality System Program Manual Revision 18 dated 7/27/07 and ISO/IEC 17025. These results relate only to the items tested and this report shall not be reproduced, except in full, without the written approval of Laboratory Testing, Inc. L.T.I. is accredited by PRI to ISO17025 and by Nadcap for NDT and Materials Testing for the test methods and specific services as listed in the Scopes of Accreditation available at www.labtesting.com and www.eAuditNet.com. The results reported on this test report represent the actual attributes of the material tested and indicate full compliance with all applicable specification and contract requirements.

MERCURY CONTAMINATION: During the testing and inspection, the product did not come in direct contact with mercury or any of its compounds nor with any mercury containing devices employing a single boundary of containment.

NOTE: The recording of false, fictitious or fraudulent statements or entries on this document may be punishable as a felony under Federal Statutes.

Sherri L. Scheifele
QA Specialist

Sherri L Scheifele

By: _____
Authorized Signature

Certified Test Report

LABORATORY TESTING INC.
2331 Topaz Drive, Hatfield, PA 19440
Phone: 800-219-9095 ◆ Fax: 800-219-9096

BNL001-09-05-15980-27

Accredited Nadcap™
Materials Testing Laboratory
Nondestructive Testing

SOLD TO
Brookhaven National Laboratory
Collider-Accelerator Dept.
Building 911A
Upton, NY 11973-5000

SHIP TO
Brookhaven National Laboratory
Collider-Accelerator Dept.
Building 911A
Upton, NY 11973-5000
ATTN: G. T. McIntyre

CUSTOMER P.O.	CERTIFICATION DATE	SHIP VIA
BNL-0000148742	6/18/2009	EMAIL & UPS

DESCRIPTION

Quantity: 1
Size: 1 3/16" x 4 1/2"
PO Line Item No.: 6
Drawing No.: 1242T00 126
Weld Type: No welding - material sample

Charpy V-Notch Impact testing at -452° F (4 Kelvin) was performed on (1) set of the submitted Test Specimen in accordance with Customer's Instructions with the following results:

LOCATION	PIECE NO.	(FT-LBS.) ENERGY	(INCHES) LAT. EXP.	(%) SHEAR
	1	4	.004	5
BASE METAL	2	3	.004	5
	3	5	.005	5

NOTE: Sub-size (9mm x 10mm) charpy specimens were used for above testing.

The services performed above were done in accordance with LTI's Quality System Program Manual Revision 18 dated 7/27/07 and ISO/IEC 17025. These results relate only to the items tested and this report shall not be reproduced, except in full, without the written approval of Laboratory Testing, Inc. L.T.I. is accredited by PRI to ISO17025 and by Nadcap for NDT and Materials Testing for the test methods and specific services as listed in the Scopes of Accreditation available at www.labtesting.com and www.eAuditNet.com. The results reported on this test report represent the actual attributes of the material tested and indicate full compliance with all applicable specification and contract requirements.

MERCURY CONTAMINATION: During the testing and inspection, the product did not come in direct contact with mercury or any of its compounds nor with any mercury containing devices employing a single boundary of containment.

NOTE: The recording of false, fictitious or fraudulent statements or entries on this document may be punishable as a felony under Federal Statutes.

Sherri L. Scheifele
QA Specialist

Sherri L. Scheifele

By: _____
Authorized Signature

e-Gun & 56 MHz LESHC/PSSC Review

- Purpose
  1. Review the design and analysis of ERL electron gun cavity and helium vessel components for pressure safety in preparation for procurement.
  2. Review the design and analysis of 56 MHz cavity and helium vessel components for pressure safety in preparation for procurement.
  3. Presentation of an alternate approach to SRF cavity design for pressure safety.

e-Gun & 56 MHz Cavity PSSC Reviews

e-Gun Overview	G. McIntyre
e-Gun Cavity & Helium Vessel Design	G. McIntyre
e-Gun & Helium Vessel ASME Analysis	C. Pai
e-Gun / Helium Vessel Compliance	G. McIntyre
56 MHz Cavity Overview	G. McIntyre
Cavity & Helium Vessel Design and Analysis	C. Pai
Vacuum Vessel as Pressure Boundary Design Approach	G. McIntyre

- Electron Gun Overview
  - The e-Gun is a vital component of the ERL (Energy Recovery Linac),
    - ERL is a “mandatory facility” for e-RHIC and has been declared a strategic initiative for BNL
  - The e-Gun is a unique device (world wide) with aplications in:
    - Physics
    - National Security

Electron Gun Cryomodule

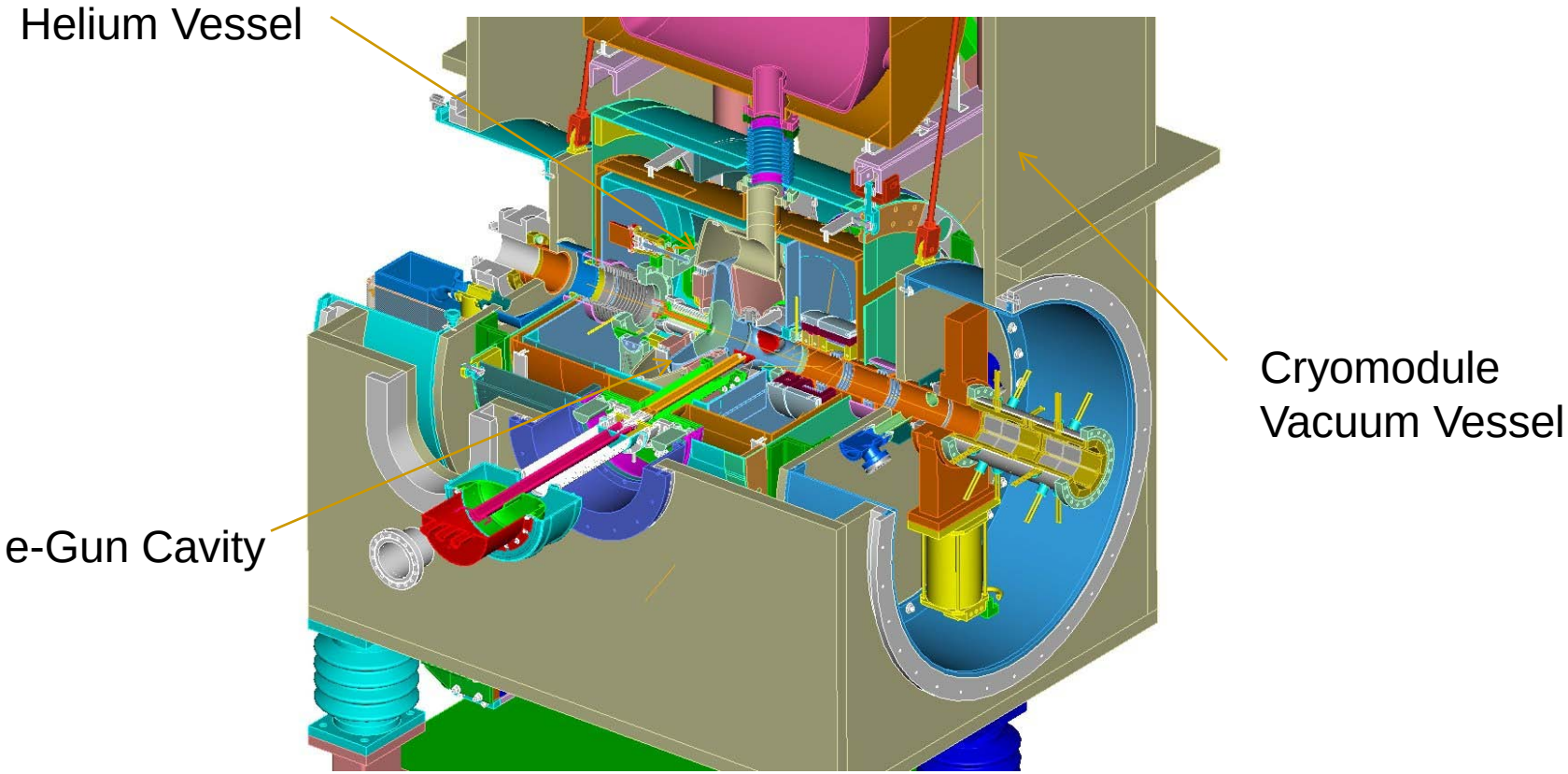

Only the cavity and helium is being reviewed today.

e-Gun Cavity PSSC Review

e-Gun Cavity / Helium Vessel Assembly

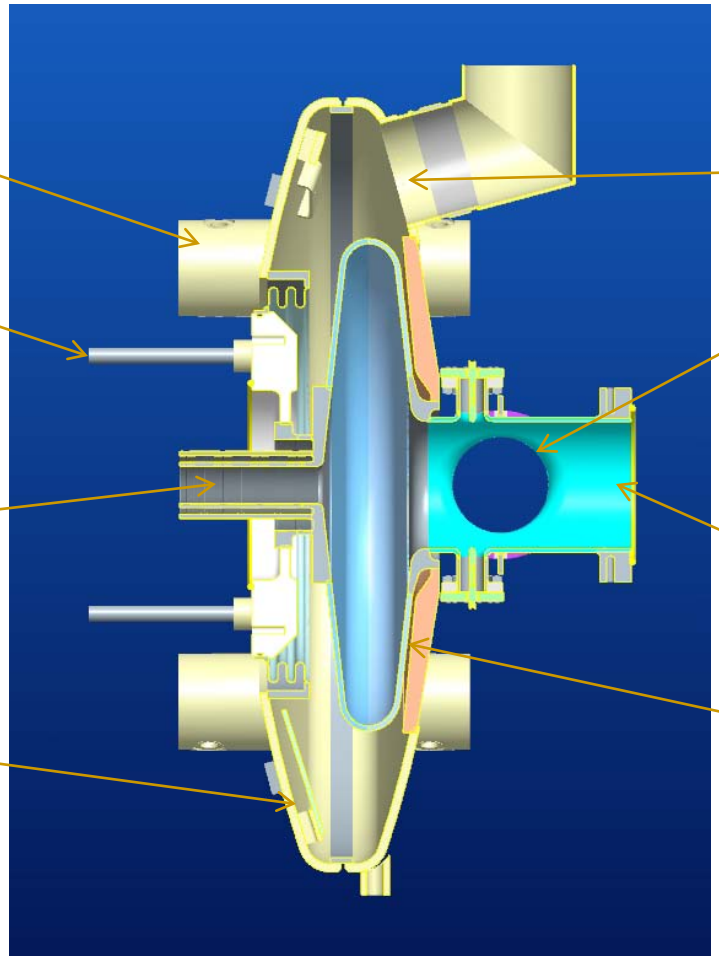

e-Gun Cavity PSSC Review

- The cavity is fabricated from RRR niobium (Nb).
- Helium Vessel surrounds the cavity & is titanium.
- Cavity & Vessel to be fabricated I.A.W. ASME Section VII towards equivalent safety.
  - Material certification required for all materials.
  - Analysis conducted (AES) & verified by C-AD.
    - Results will be presented at this review
  - Welding Procedure Specification (WPS) / Brazing Procedure Specification (BPS) written for all welds and brazes.
    - All weld were full penetration E-B butt welds.
  - Procedure Qualification Records performed for I.A.W WPS / BPS.

e-Gun Cavity PSSC Review

- ASME Section VII equivalency (cont'd)
  - Samples from PQR(s) tested I.A.W. ASME Section IX:
    - Tensile tests
    - Guided bend tests (face and root)
    - Macropolishing
    - Charpy-Impact testing
- Test results are in C-AD archive: 1242G00001-QAR-02

e-Gun Cavity PSSC Review

- Cavity fabrication is complete
  - All welds performed I.A.W WPS by qualified welder. C-AD Archive: 1242G00001-QAR-01
  - All pressure boundary welds underwent radiograph examination.
    - All passed
    - Results stored in C-AD Archives under ERL QA, 1242G00100-QAR-01
  - Brazes performed I.A.W BPS by qualified brazer.
    - Passed Code required examinations: 1242G00019-QAR-02
    - All results stored in C-AD Archives under ERL QA
      - BPS: 1242G00019-QAR-03

e-Gun Cavity PSSC Review

- e-Gun Cavity Welds
  - Full penetration Electron-Beam butt welds
  - Nb – Nb or Nb – Nb55Ti
  - All pressure boundary welds under went radiograph examination, per Code, and passed.

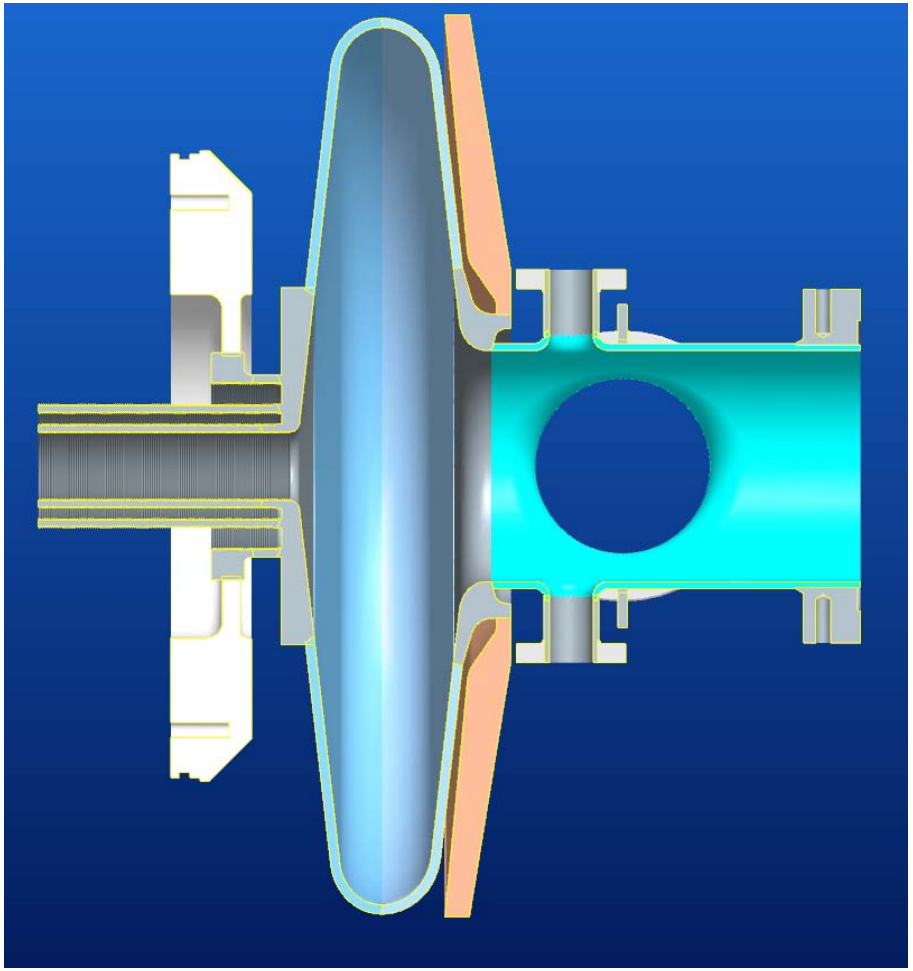

e-Gun Cavity PSSC Review – Helium Vessel

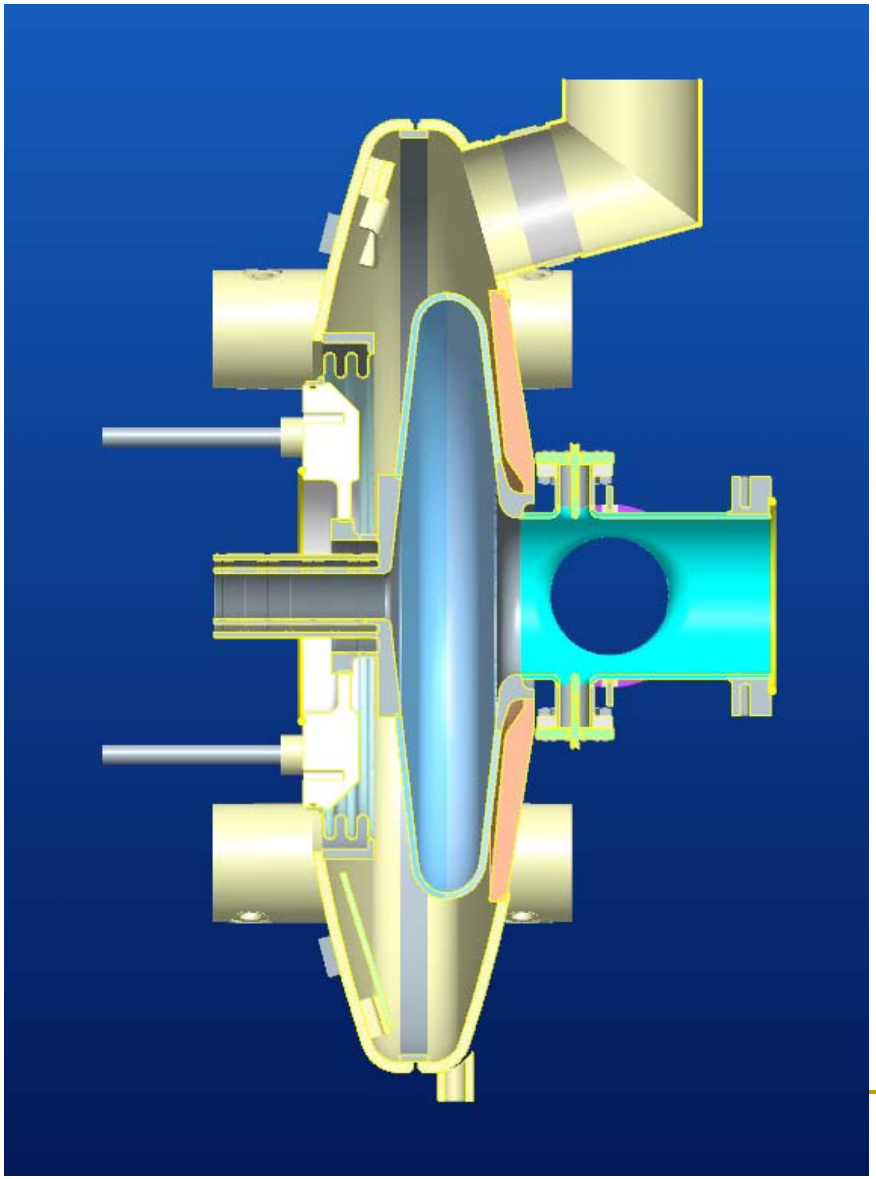

Helium vessel fabricated from titanium

Constructed in two sections (shells)

Fabricated I.A.W ASME Code Requirements

Completed vessel welded to cavity assembly
- Weld configurations Code compliant
- Ti to Nb-Ti Welds
- All but final weld are full penetration butt welds into backing strips

e-Gun Cavity PSSC Review – Helium Vessel

Helium Vessel Welds

Relevant Parts of ASME Section VII, Division 2

HELIUM VESSEL - AES # 1242H00101

Section VII, Division 2

Weld #	Weld Description	Weld Location	Relevant Code Part/Table/Figure	Comments
1	Nozzle to Shell, vent line	Sht 2, Zone D7 & C2	Table 4.2.10, Detail 6, Type 7, Cat. D	throat dimension >0.7 t nozzle
2	Non-penetrating bracket weld - Nitronic rod support	Sht 2, Zone B3, 4 PLS	Figure 4.2.2	Load over 4 supports 600 lbs
3	Non-penetrating weld - string tool support	Sht 2, Zone A7	Figure 4.2.2	Support weight of cavity & helium vessel - 130 lbs
4	Non-penetrating bracket weld - Nitronic rod support	Sht 2, Zone C7	Figure 4.2.2	Balanced load over 2 supports 600 lbs
5	Non-penetrating weld - tuner support	Sht 3, Zone C7, 4 PLS	Figure 4.2.2	Load over 4 supports 1000 lbs maximum
6	Non-penetrating bracket weld - Nitronic rod support	Sht 3, Zone B3, 4 PLS	Figure 4.2.2	Load over 4 supports 600 lbs
7	Nozzle to Shell, fill line	Sht 3, Zone A7 & A2	Table 4.2.10, Detail 5, Type 7, Cat. D	throat dimension >0.7 t nozzle
8	Bellows Ring to Shell ID weld	Sht 3, Zone C2	Table 7.2, Table 4.2.4, Detail 2, Type 2 Cat. B	Backing strip full penetration
9	Backing strip to shell equator weld	Sht 3, Zone D2	Part 4.2.5.1 (g)	Minor non-load bearing weld
10	Non-penetrating bracket weld - Thermal sensors	Sht 4, Zone D6, B7, B5	Part 4.2.5.1 (g)	Minor non-load bearing weld

e-Gun Cavity PSSC Review – Helium Vessel Welds

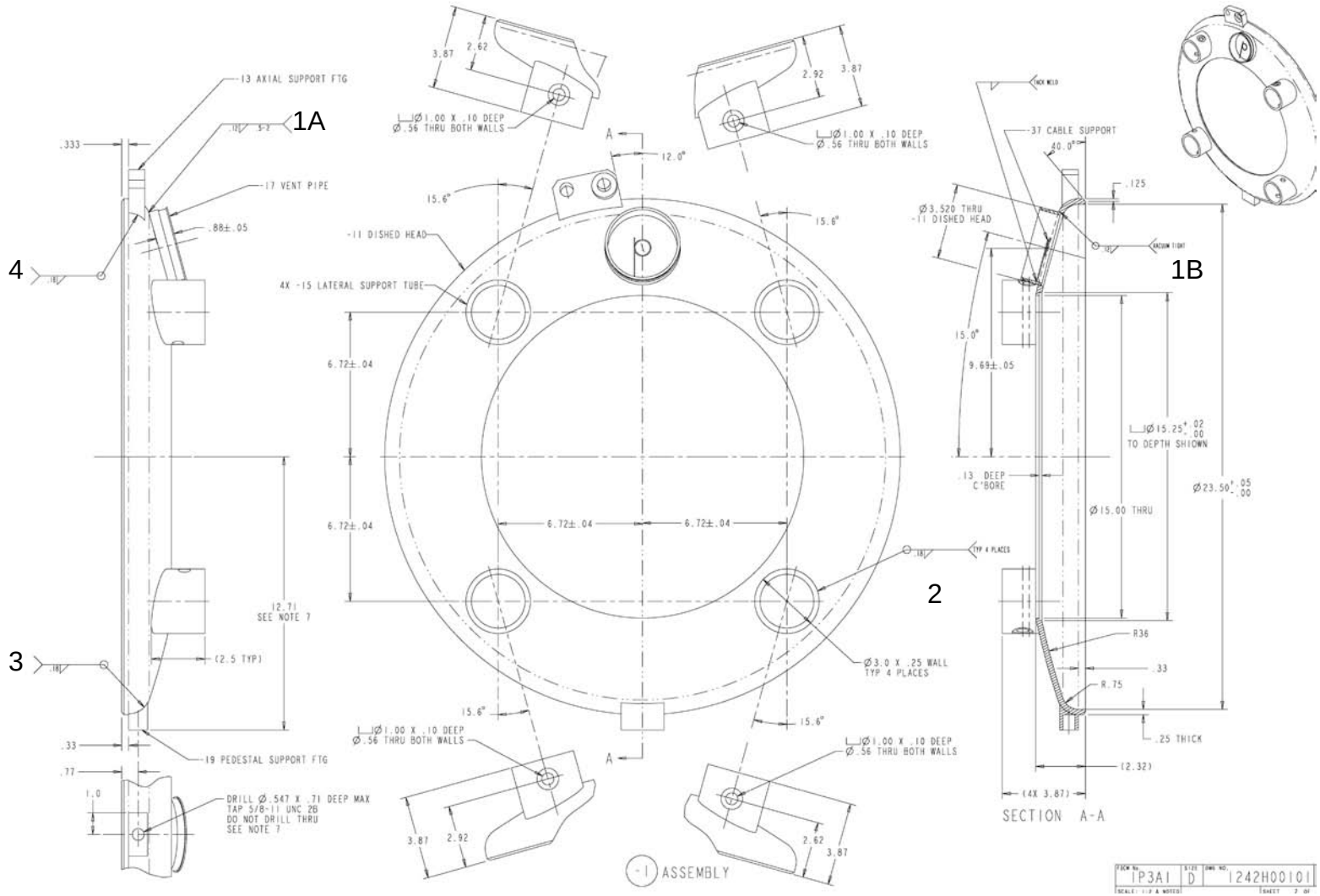

e-Gun Cavity PSSC Review – Helium Vessel Welds

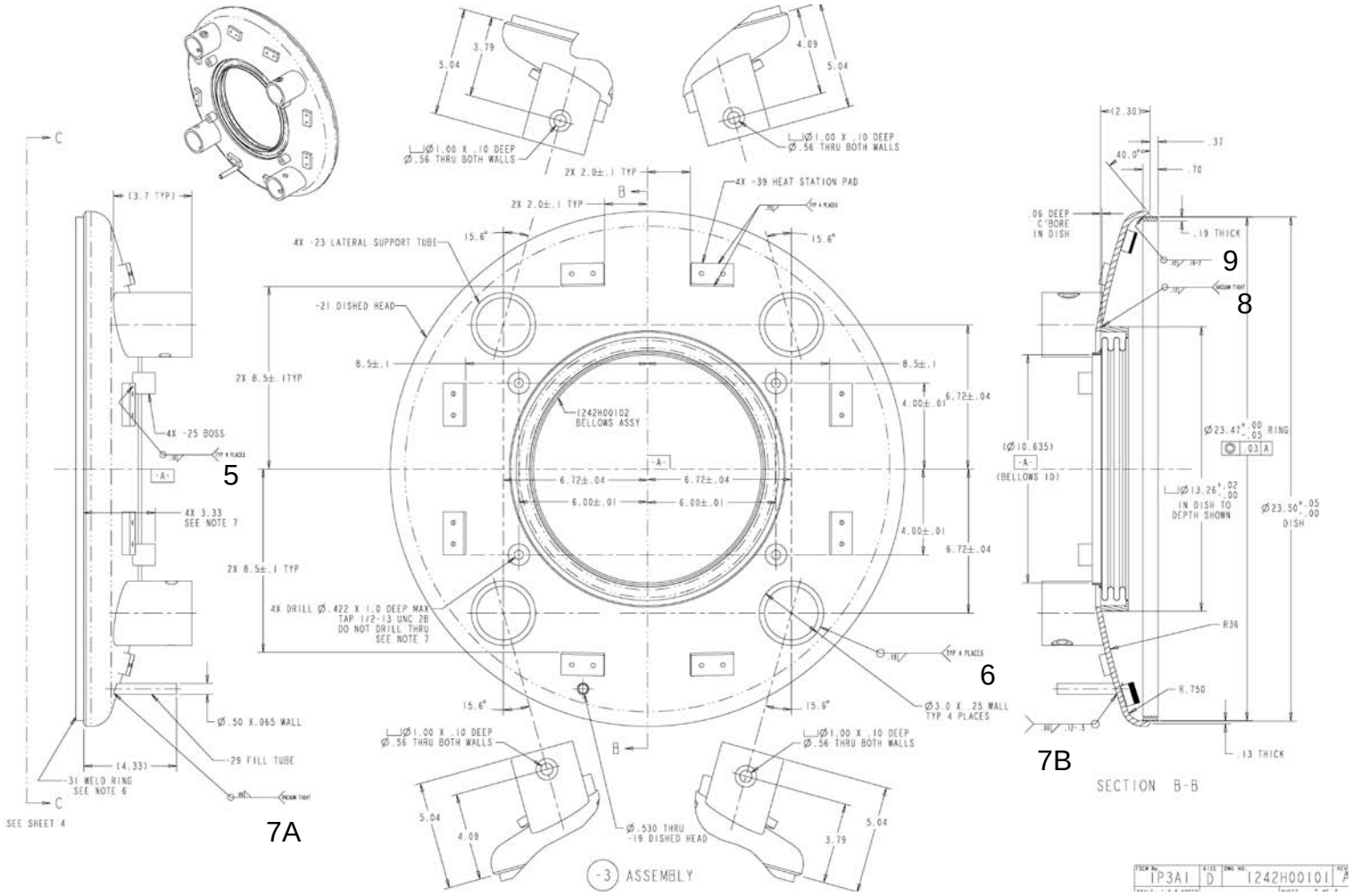

e-Gun Cavity PSSC Review – Helium Vessel Welds

Bracket Supporting Welds

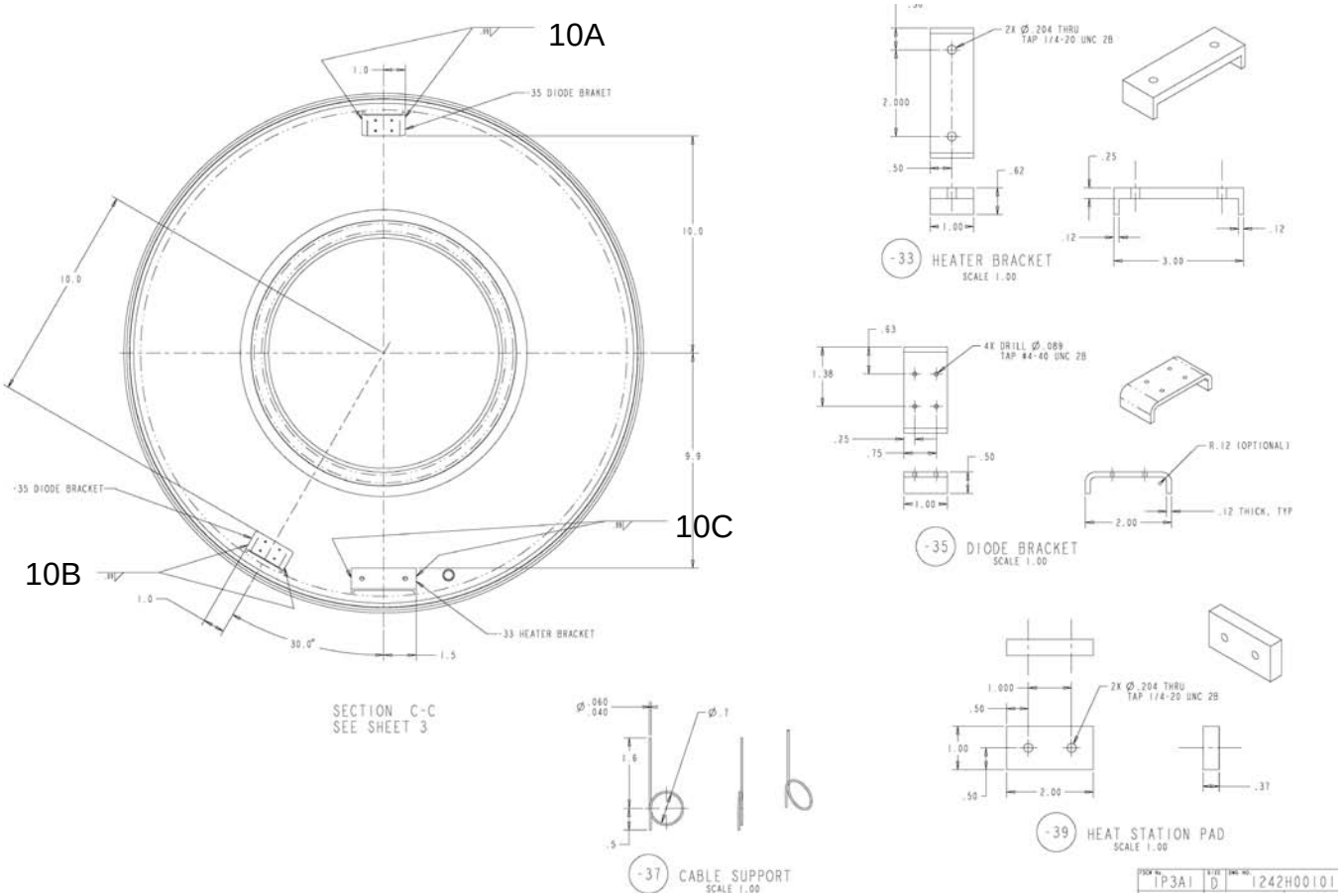

e-Gun Cavity PSSC Review – Helium Vessel Welds

Bellows Assembly – All titanium construction – Div. 2, part 4.19

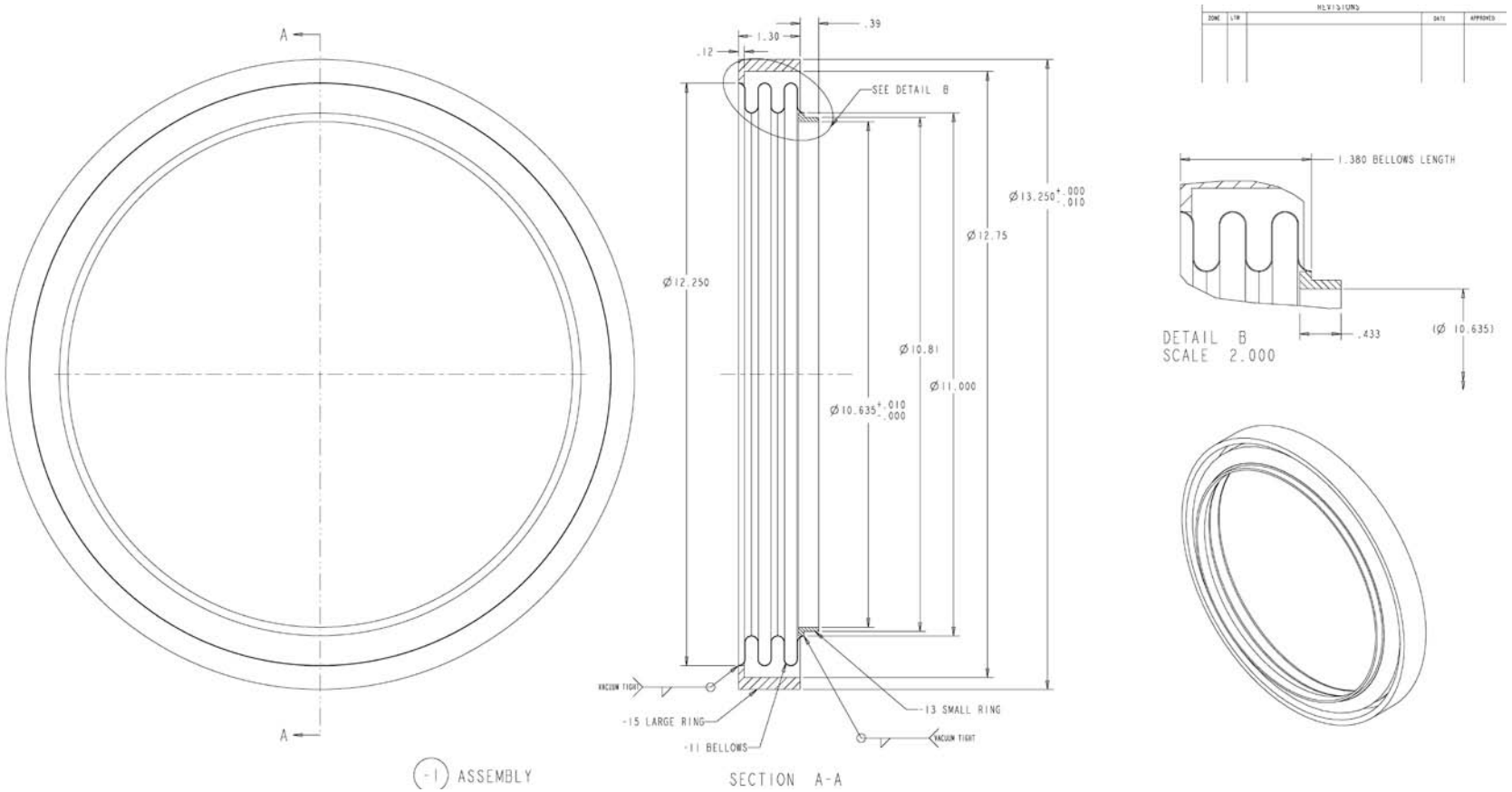

e-Gun Cavity PSSC Review – Cavity/Vessel

Cavity to Vessel Welds

Relevant Parts of ASME Section VII, Division 2

CAVITY to HELIUM VESSEL -
AES # 242H00100 Section VII, Division 2

Weld #	Weld Description	Weld Location	Relevant Code Part/Table/Figure	Comments
1	Nb55Ti flange to Ti Shell	Sht 2, Zone D2	Table 7.2, Table 4.2.4, Detail 2, Type 2 Cat. B	Backing strip full penetration (Table 7.2, Cat. B, Type 2)
2	Ti / Ti Shell Equator weld	Sht 2, Zone D3	Table 7.2, Table 4.2.4, Detail 2, Type 2 Cat. B	Backing strip full penetration (Table 7.2, Cat. B, Type 2)
3	Ti flange to Nb55Ti flange	Sht 3, Zone D3	Table 4.11.1 Detail 1 Type 2	Elongates fillet to achieve "Y" dimension

e-Gun Cavity PSSC Review – Helium Vessel

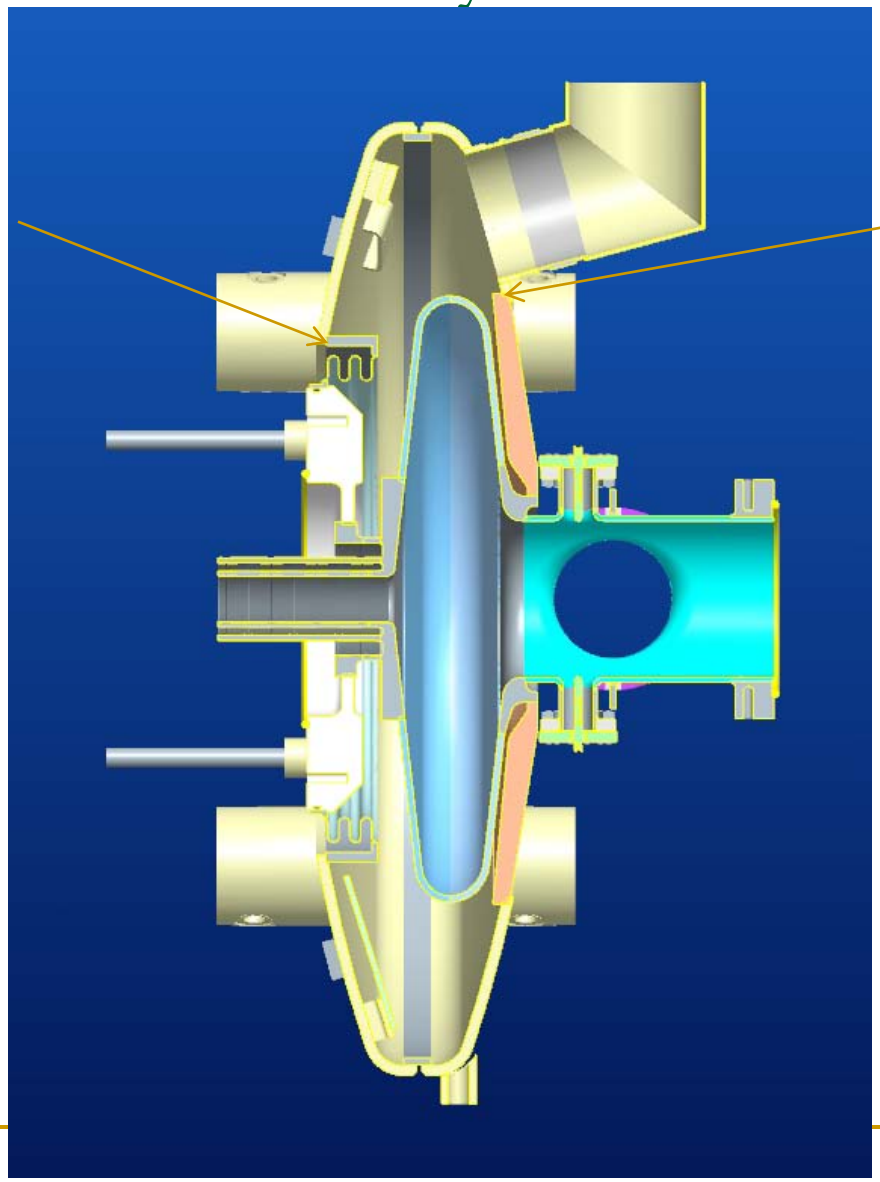

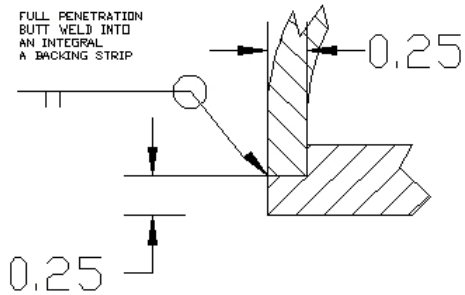

Full Penetration Butt Welds into Backing Strips (integral)

1- Nb to NbTi Weld

HV- Ti to Ti Weld Shell to Bellows Cuff

e-Gun Cavity PSSC Review – Helium Vessel

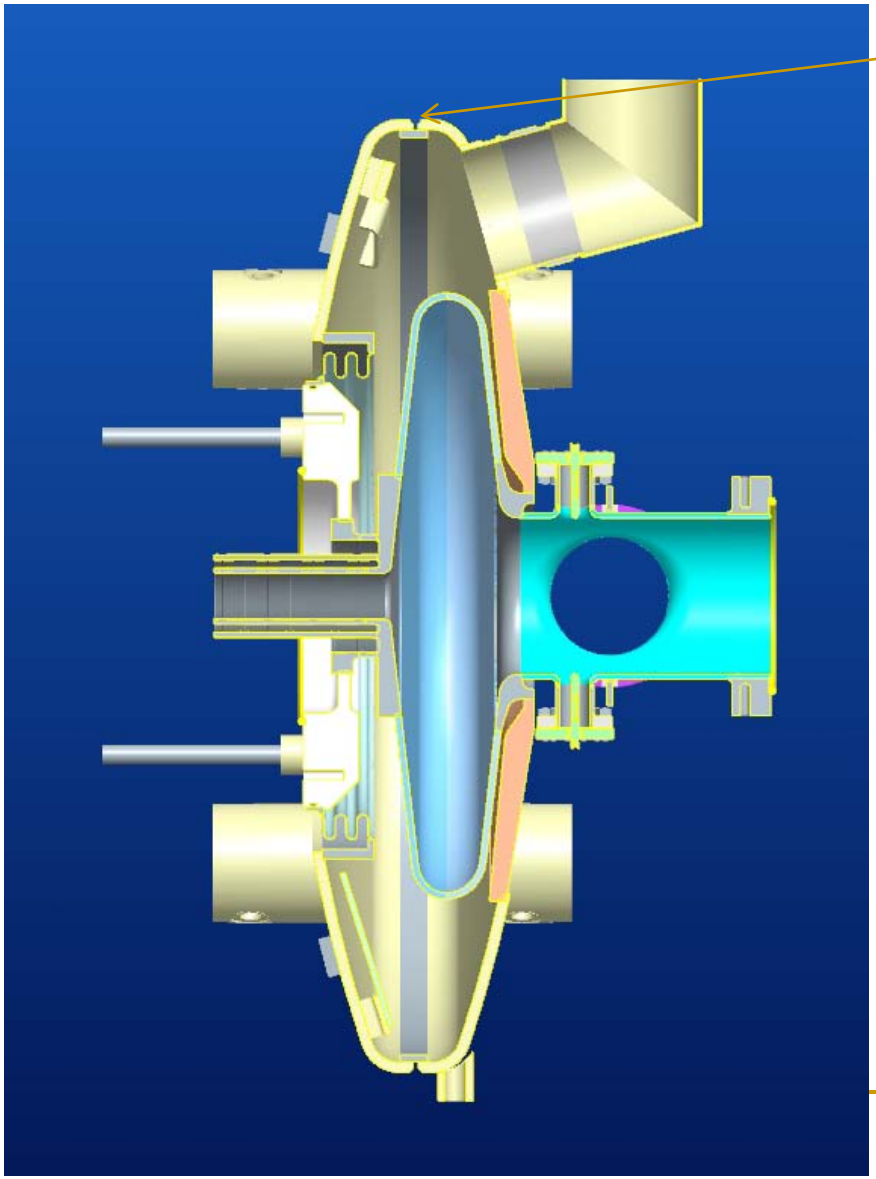

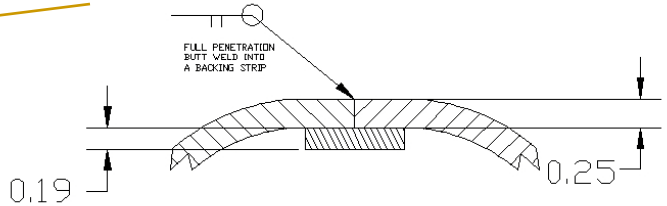

Full Penetration Butt Weld into Backing Strip

Ti to Ti Weld

e-Gun Cavity PSSC Review – Helium Vessel

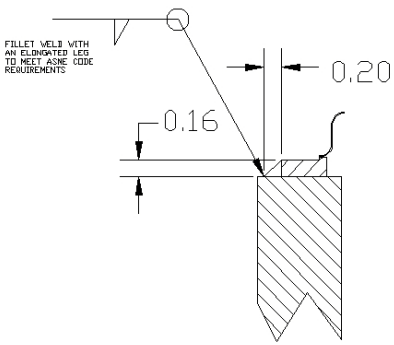

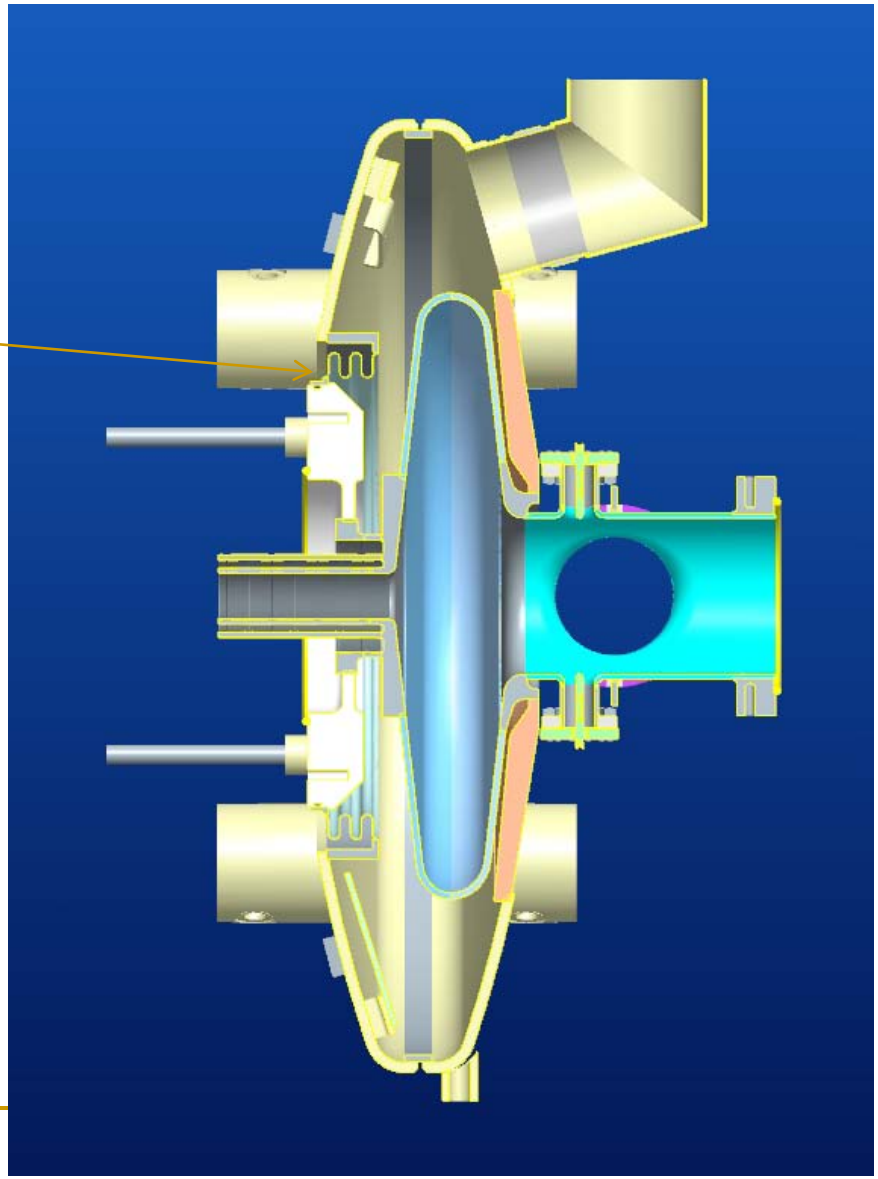

Fillet Weld - Final Weld in assembly used to tune cavity.

Fillet leg elongated to meet ASME requirements.

Visual inspection & PT

e-Gun Cavity PSSC Review – Helium Vessel

- All Cavity and Helium Vessel Fabrication performed to ASME BPVC, Section VII, Div. 2.
  - Analysis & verification
  - Material Certification
  - WPS / BPS
  - PQR / Qualified welders
  - Examination reports on all welds
  - All to be / are in C-AD Mechanical Archives

Laboratory Environment Safety and Health Committee
Safety Assessment Subcommittee

MINUTES OF MEETING 13-02
January 11, 2013

FINAL

Committee Members Present
D. Beavis
C. Conrad* (Secretary)
R. Costa
M. Gaffney
W. Gunther (Acting Chairperson)
H. Kahnhauser
R. Karol
R. Lee
E. Lessard
C. Schaefer

*** Non-voting**

Committee Members Absent
N. Bernholc
S. Hoey
R. Travis

Visitors
S. Belomestnykh
I. Ben-Zvi
J. Cracco, DOE
G. Shepherd

Agenda:

1. **Review the Exemption Request for the Prototype Energy Recovery Linac Low Power Beam Test and Its Commissioning ASE**

Minutes of Meeting: Appended on pages 2 through 5

[Signature on File] 1/31/13	**[Signature on File] 2/7/13**
W. Gunther Date	**G. Goode Date**
LESHC Acting Chairperson	**ESH ALD**

Acting Chairperson W. Gunther called the meeting of the Laboratory Environment Safety and Health Committee (LESHC) Safety Assessment Subcommittee (SAS) to order on January 11, 2013 at 1:10 p.m. The purpose of the meeting was to review C-AD's exemption request to conduct low power beam testing of the Prototype Energy Recovery Linac (aka ERL) prior to the Accelerator Readiness Review (ARR) of the full ERL facility.

1 Exemption Request for Prototype Energy Recovery Linac (ERL) Low Power Beam Test.
E. Lessard of C-AD presented an overview of this exemption request, safety information, and the differences between this Commissioning ASE (CASE) and the BHSO approved ERL ASE. I. Ben-Zvi of C-AD presented technical aspects of the ERL. The presenters and other attendees made the following points during the course of the presentation. [1]

1.1 C-AD wants permission to conduct low power beam tests (no greater than 70 W) of the ERL prior to conducting an ARR for the full ERL facility per Accelerator Safety Order 420.2C (aka Order), Paragraph (4).(b).

1.1.1 C-AD will conduct these tests intermittently over a 7-month period after receiving BHSO approval.

1.1.2 C-AD management will identify and form the ARR team approximately 120 days after the onset of the low power beam testing, and one or more persons knowledgeable in electron-accelerator operations will be part of this team.

1.2 The ERL meets the safety-authorization-document requirements of the Order--it has an approved SAD and ASE.

1.2.1 Specific steps of the Order can be exempted by a request to BHSO based on a safety analysis, and in this case it is the ARR step related to authorizing commissioning with an electron beam.

1.3 LESHC/Pressure and Cryogenic Safety Subcommittee (PCSS) and SAS meetings related to the ERL have been conducted since May 2006 and include:

- Review of the Prototype ERL SAD and ASE (LESHC 08-13);
- Review of the Revised Prototype ERL ASE and C-AD USI (LESHC 12-04);
- Review of the cryogenic system for the ERL (LESHC 10-10; 11-09; 11-10, 08-05).

1.3.1 A review of the ERL beam dump (LESHC 07-18) was conducted as the beam dump is being built to fit in the beam line.

1.3.2 A BORE-type Walk Down of the ERL areas was conducted on 8/30/11.

1.3.3 Prior internal and external Safety Review Committee issues related to this test are tracked to completion.

1.3.4 Some Committee members went on a walkthrough of the facility and standalone control room on 1/9/13.

1.4 The ERL, located in Bldg. 912, is a prototype (experimental) that will show that very large levels (MW) of beam power in the form of short bursts of electron kinetic energy can be recovered prior to beam entering the dump.

1.4.1 The ERL facility consists of a shielded enclosure, radiation protection interlocks and gates, ODH interlocks and alarms, a beam dump, photocathode installed in the super-conducting (SC) electron gun, 5 cell RF cavity, focusing and bending magnets, laser, klystron, power for the RF systems, and a control room.

[1] The presentation and these Minutes are posted on the LESHC website: http://www.rhichome.bnl.gov/AGS/Accel/SND/laboratory_environment,_safety_and_health_committee.htm.

1.4.2 In place are the gun, laser, cryogenic system, 5-cell RF cavity and power supply.

1.4.3 There are various physics applications that make use of an electron beam which has high energy and high current, i.e., free electron laser, electron ion collider.

1.4.4 Demonstrating the energy recovery aspect is an important capability in constructing a feasible eRHIC.

1.5 The bases for the exemption request include:

- A low power beam test is needed to optimize the beam in order to finish construction of the energy-recovery aspects of the accelerator;
- Low-power testing allows the development of operational efficiency.

1.6 Conducting an ARR at this stage is neither practical nor necessary because of the nature of the hazard and the developmental nature of the low power beam line—the safety systems and power limit are designed to prevent faults greater than 5 mrem/hr in any area where access is allowed (i.e., outside the ERL enclosure).

1.7 As a result of the recent events at NSLS-II and the Accelerator Test Facility (ATF), C-AD looked more closely at its Conduct of Operations (ConOps), chain of command, organizational chart, and the procedures on which its operators were trained.

1.7.1 The ERL ConOps is part of C-AD's ConOps; the operators are trained; fault studies will be documented; and radiation monitors and displays are approved and operating with signals going back to the control room.

1.7.2 Low energy shielding and magnet-bending of beam were re-reviewed; shield drawings and changes are configuration controlled; and required documented fault studies will be done as soon as possible.

1.8 Safety barriers put in place include:

1.8.1 The C-AD Radiation Safety Committee (RSC) will review the use of alarming and interlocking radiation monitors for this low power beam test, inspect and approve the locations of alarming and interlocking radiation area monitors outside the ERL enclosure; and inspect the ERL enclosure shielding prior to testing with low power beam.

1.8.2 A Radiation Safety Check-off list will be prepared prior to the low power beam tests to ensure the ERL access control system is operational; alarming and interlocking radiation monitors (chipmunks) are in place; and shielding is in place.

1.8.3 The ERL Operations Coordinator trains and qualifies each operator and other staff to perform sweeps, respond to alarming Chipmunk radiation monitors, and put the ERL in a safe condition.

1.8.3.1 Engineered-safety-system owners must sign on the Radiation Safety check-off list that their systems are tested, approved and operational prior to enabling beam.

1.8.4 During testing with low power beam, one qualified ERL operator and one other trained person will be in the Control Room, both of whom are trained to turn off the beam and put the ERL in a safe condition.

1.8.5 At the beginning and end of each day of low power beam tests the beam energy and beam power will be logged.

1.8.6 The Facility Support (FS) Rep will schedule surveys during a test and additional surveys will be performed for several testing configurations and different beam energies that are within the specific maximum credible incident (MCI) limits.

1.8.7 The C-AD RSC Chair and ESSHQ Division Head will review the radiological surveys from the chipmunks with the FS Rep each day of low power beam testing.

1.9 Goals of the low power beam test are:

- Operate remotely from the ERL control room.
- Establish stable operation of the SRF injector--at minimum current from a single bunch to low repetition rate bunch trains, and then to reach minimum energy of 1 MeV with a desired energy of 2.5 MeV.
- Get to know the performance of the critical elements of the ERL, establish the best operating procedures, and work out potential problems.
- Determine if there are any issues with the magnets around the ring.
- See the sensitivity of the radiation monitors and verify if their locations are correct in order to protect the facility and personnel.

1.10 A checklist compares what was analyzed with what was built, and D. Beavis will examine the differences in what was calculated for the final configuration with what is actually there.

1.11 For the low-power test in the accelerator there will be two beams: a high energy beam, which gets its energy from the 5-cell cavity, and a low energy beam from the electron gun cavity; both beams will be 70 W or less and go to a temporary beam dump.

1.11.1 The high-power 1 MW beam dump is not yet built, but it will be in place for the ARR.

1.12 Power will be limited by the chipmunk radiation monitors that will turn off the beam if the maximum accessible radiation level is 2.5 mrem/hr or greater.

1.12.1 There are also beam current monitors and beam loss monitors to help control the beam.

1.13 For the low power beam test, the RSC put hold points to understand the protection system for radiation, i.e., the string of magnets, which moves the beam up and down, will be off until fault studies are reviewed.

1.14 The CASE for the low power beam test was reviewed and compared with the approved ASE for full operation of the ERL.

1.14.1 The following MCI limits from the ASE were not included in the CASE: 1.5 MW for the gun, 10 MW for power in the ring, and 1.5 MW for striking the dump.

1.14.2 The electron kinetic energy limits are the same in both the CASE and ASE: 3.5 MeV for the gun and 25 MeV for the maximum energy. However, due to the low power limit in the CASE, 25 MeV electrons may go to the temporary dump.

1.14.3 Added in the CASE is that the electron beam power leaving the gun or 5-cell cavity must be limited to 70 W.

1.14.4 In the ASE, but not included in the CASE, is: “The power source for the 5-cell cavity must be limited to deliver a maximum of 60 kW of power to the cavity”.

1.14.5 The CASE and ASE include identical credited controls for radiation, oxygen deficiency, and radiation detection system; supporting controls for calibration, testing, maintenance and inspection; and administrative controls.

1.14.6 One qualified ERL operator has to be in the control room at all times, and a second person will be trained to perform the sweep, shut off the beam and put the ERL in a safe condition.

2 The following motion was crafted by the Committee:

2.1 The LESHC recommends approval of a temporary exemption from paragraph (4).(b) of DOE Order 420.2C for low-power testing (less than 70 watts) of the Prototype Energy Recovery Linac (ERL). The temporary exemption is from the requirement to conduct an Accelerator Readiness Review for commissioning and/or operations. The temporary exemption will not exceed seven months, and is contingent upon C-AD's satisfactory completion of the actions read by the LESHC Secretary and listed below:

2.1.1 Close prior BORE and PCSS/SAS open action items.

2.1.2 Ensure that the second person in the ERL Control Room will be trained to turn off the beam and put the ERL in a safe condition.

2.2 The Committee recommends that the ALD for ESH concur with this exemption for the Prototype ERL low power beam test, and that he request BHSO to approve the 70 W test CASE and approve low-power testing.

2.3 Recommendation for approval of the motion was made by Chuck Schaefer.

2.4 Seconded by Henry Kahnhauser.

2.5 The motion was approved by 5 members of the SAS.*

3 The meeting was adjourned at 3:00 pm.

*D. Beavis, R. Karol, and E. Lessard recused themselves.

Exemption Request for ERL Low Power Test

Ilan Ben-Zvi

LESHC Meeting, January 11, 2013

Why are we asking for this exemption?

- The ERL is designed to operate at a beam power of up to 1 MW.
- The ERL is not ready yet for this operation, a number of subsystems are not constructed or assembled yet.
- Operational efficiency calls for spotting potential problem spots as early as possible and correct them.
- This can be done by early tests at a very much reduced power level.
- This approach will lead also to a safer high-power operation since problems can be detected at an early stage, while the power and risks are lower.

R&D ERL in bldg 912

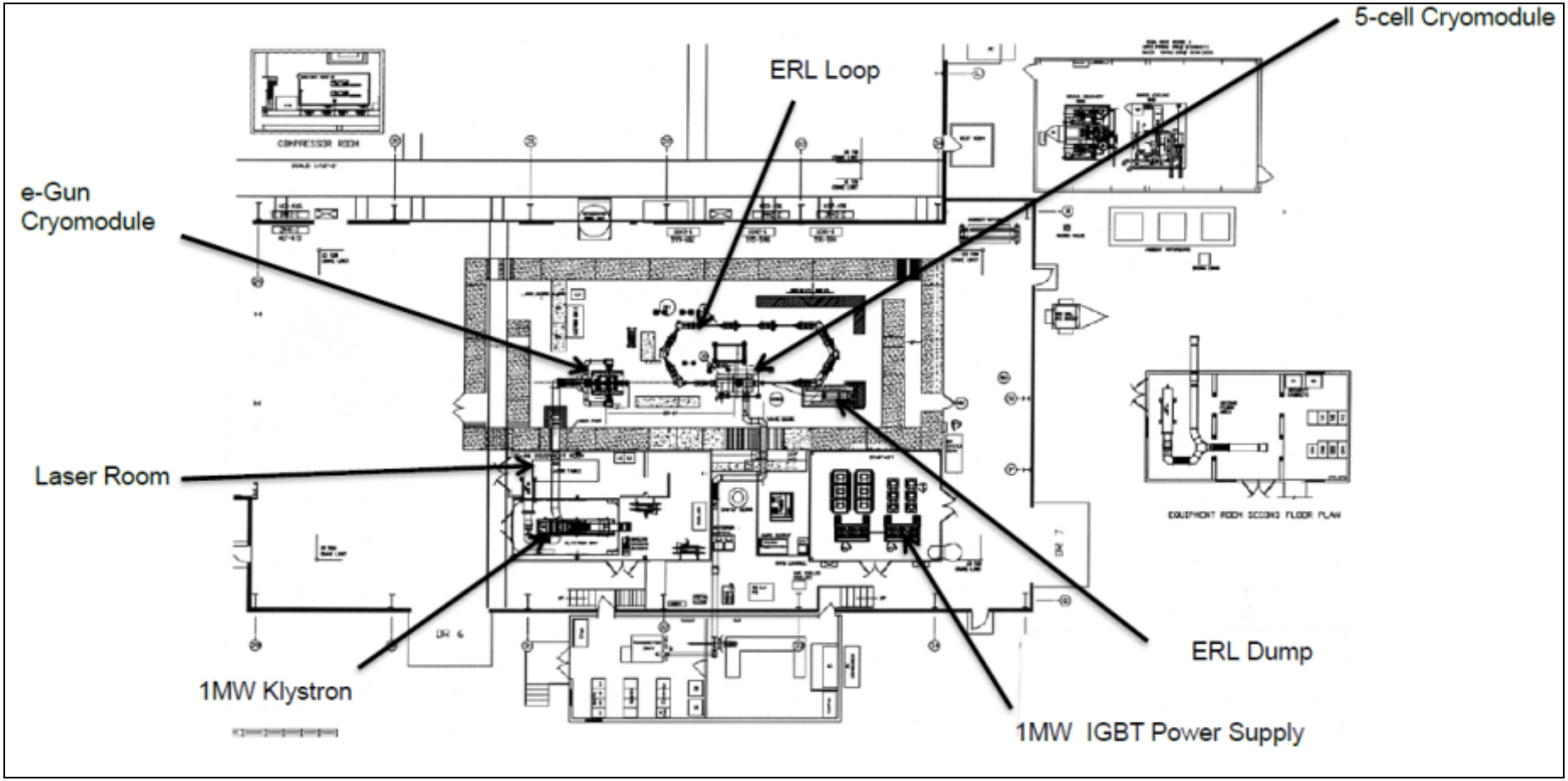

The Prototype ERL has a shielded enclosure, radiation protection and ODH interlocks, beam dump, electron gun, 5-cell RF cavity, focusing and bending magnets, laser, power for RF systems, and a Control Room.

Closer view

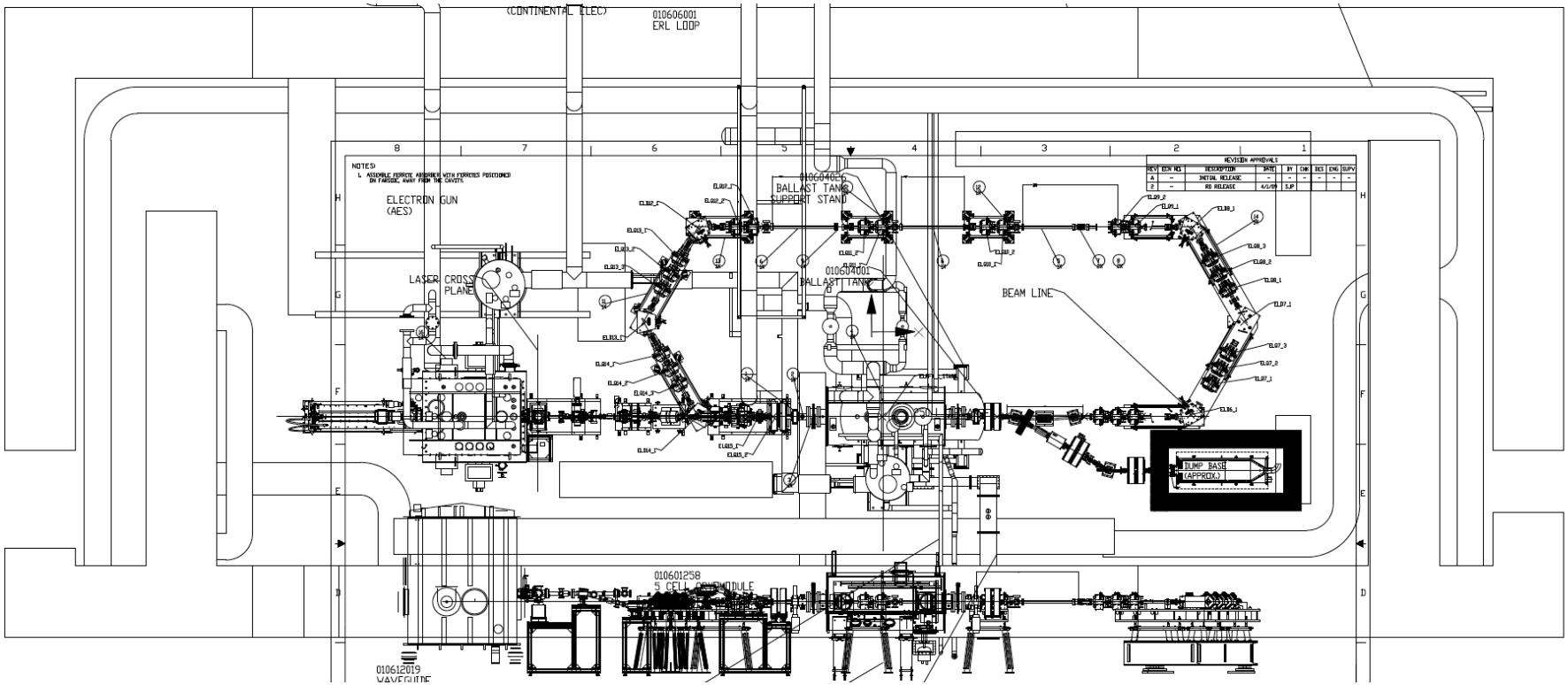
(CONTINENTAL ELEC)
010606001
ERL LOOP
ELECTRON GUN
(AES)
LASER CROSS
PLANE
BALLAST TANK
SUPPORT STAND
010604001
BALLAST TANK
BEAM LINE
DUMP BASE
(APPROX.)
010601258
5 CELL CAVIMODULE
010612019
WAVEGUIDE

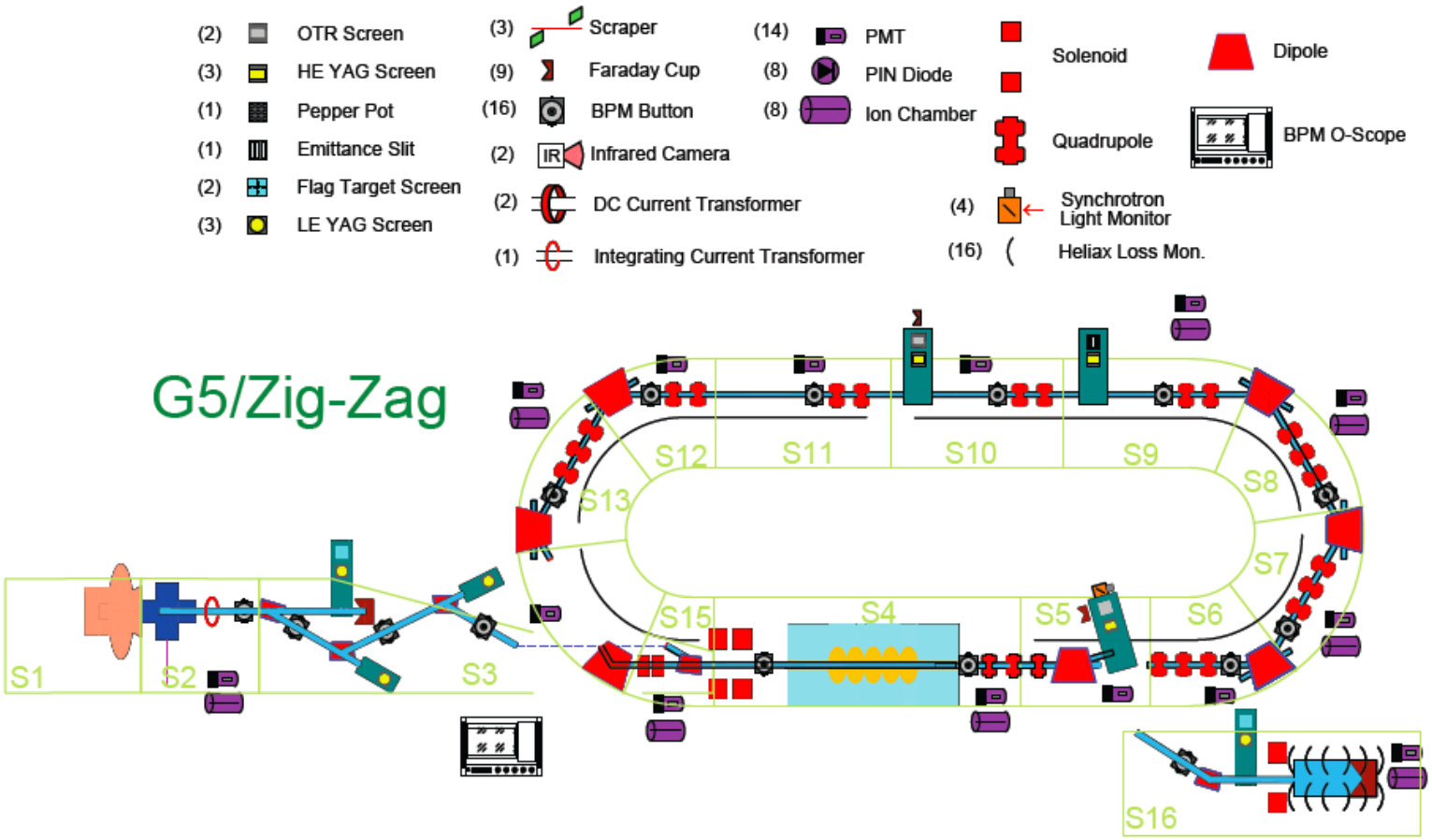

1. A laser creates an electron beam at the photo-cathode installed inside the SRF gun
2. SRF gun accelerates the beam up to 2.5 MeV
3. HTS solenoid focuses the beam
4. Beam propagates along the diagnostic line (where set of beam measurement will be performed)
5. Beam stops by Faraday Cup at the end of straight line for initial gun test.

ERL Layout, 3-D view

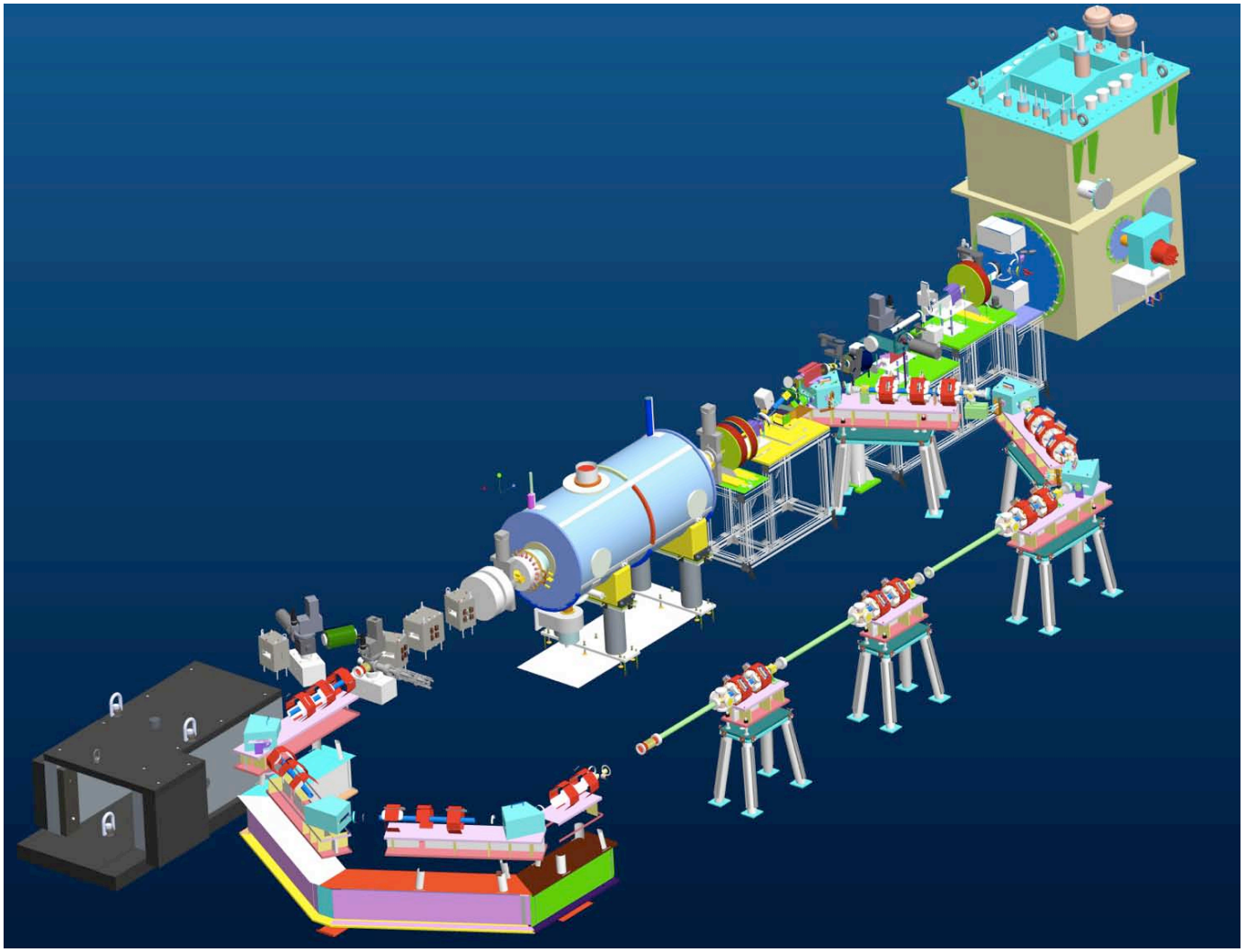

SRF Photocathode RF gun

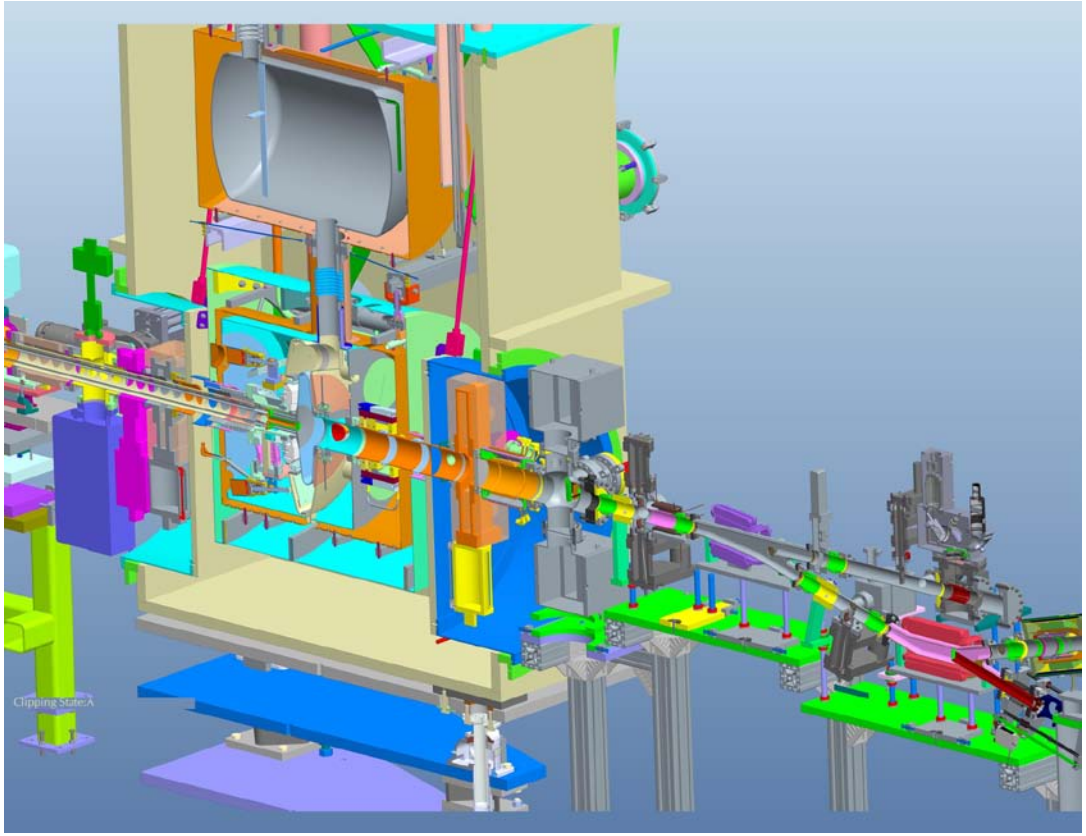

Where the 23 MeV beam stops

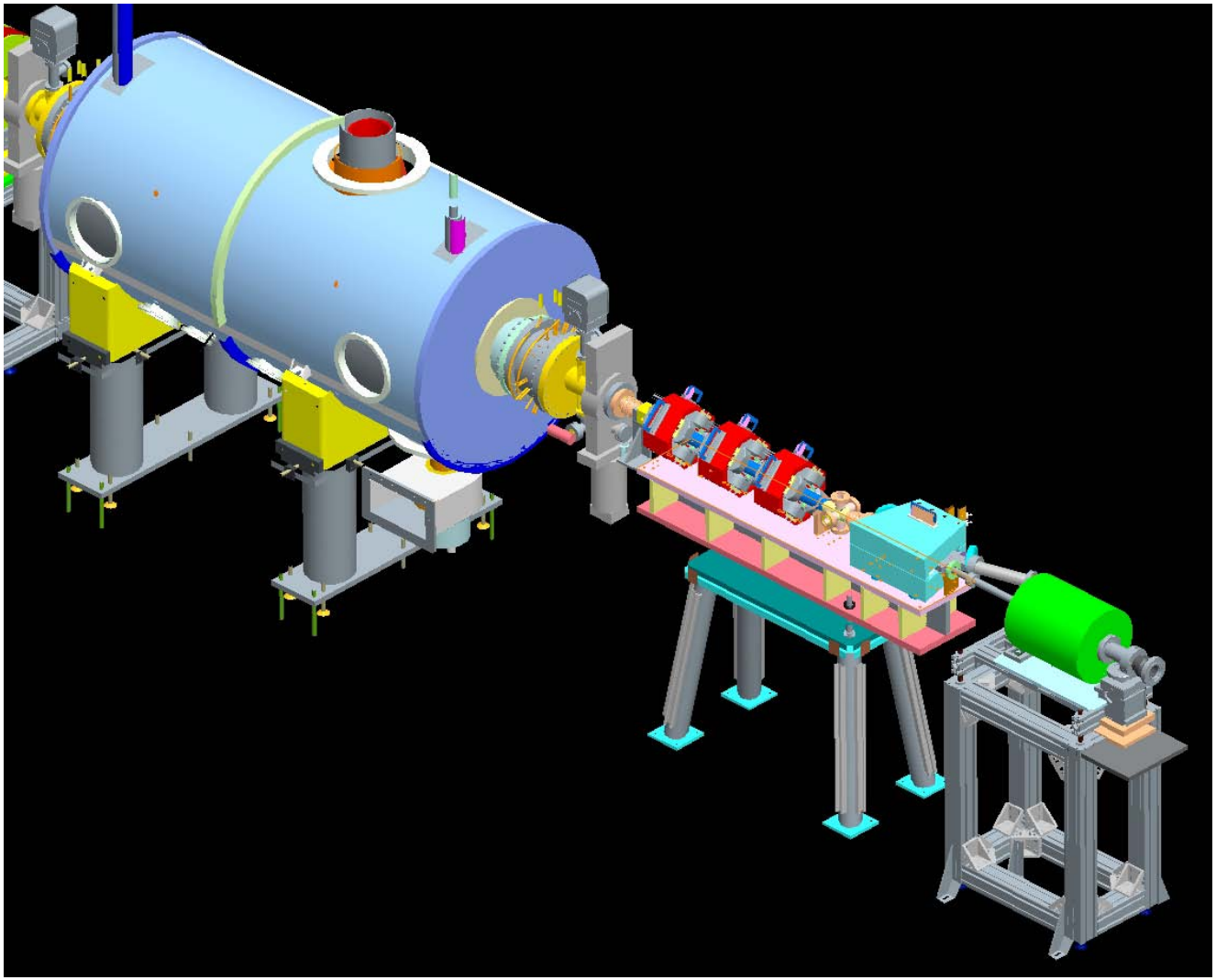

Downstream from linac

Goals of the low power beam-test

- Operate remotely from ERL control room
- Establish stable operation of SRF injector at
  - minimum current: from single bunch to low rep. rate trains. Controlled by Chipmunks, laser power, and monitored by ICT,BLM, and Faraday cup.
  - Reach minimum energy 1 MeV, desired energy 2.5 MeV. Controlled by SRF Gun voltage
- We will establish the effectiveness of the shielding, PASS and MPS while operating at power levels 4 orders of magnitude below the design levels.

Measurements

- We plan to measure charge, quantum efficiency of the photocathode, photocathode lifetime, emittance, energy spread and stability of the system.
- The objective is to get to know the performance of the critical elements of the ERL, establish the best operating procedures and work out potential problems.

Measurements: beam from gun

Diagnostics:

- Faraday Cup,
- YAG screen beam profile monitor (YAG) optional,
- Integrated Current Transformer (ICT).

At very low macro-pulse repetition-rate.

- Measure charge out of gun as a function of gun-to-laser phase.
- Increase charge gradually until good signal detected

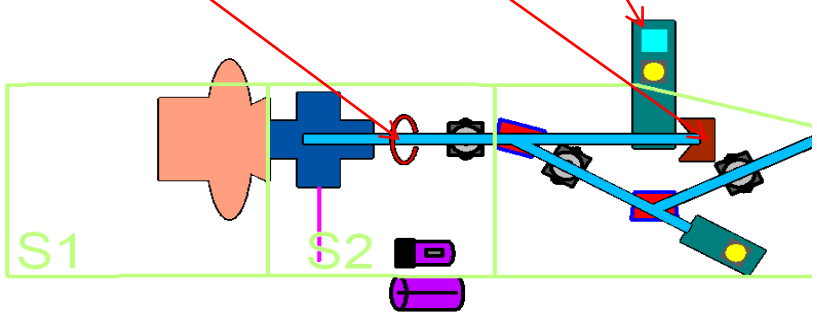

- Dipole bending angles of -15°, +30°, -30° and +15°, (8.1 Amp and 9.1 Amp) All dipoles are powered 10 amp power supplies. First bend is down.

Main Beam parameters for first beam test.
70 watts is much more than needed.

	Simple example(*) Exploratory	Measure	Studies
Charge per bunch:	10 pC	100 pC	500 pC
Maximum energy:	2.5 MeV	23 MeV	23 MeV
Pulse repetition frequency	1 Hz	100 Hz	1000 Hz
Average current:	10 pA	10 nA	500 nA
Average power:	25 µA	230 mW	11 W

(*) At 20 MeV gain from the linac the duty factor is limited by quench to 0.1, however this has not been taken as a credit.

Laser pulse trains

- Pulse train period is adjustable and given by NT_0, where T_0 is the period between laser pulses, T_0=1/9.383 MHz, and N is an adjustable integer. The pulse train repetition rate is thus adjustable between 0 to 10 kHz.
- Within a pulse train, the duration over which the laser pulses are on is nT_0, which is controlled by a setting of a gate, from a single pulse to 90% of NT_0.
- The pulse repetition rate used above is 9.383n/N MHz

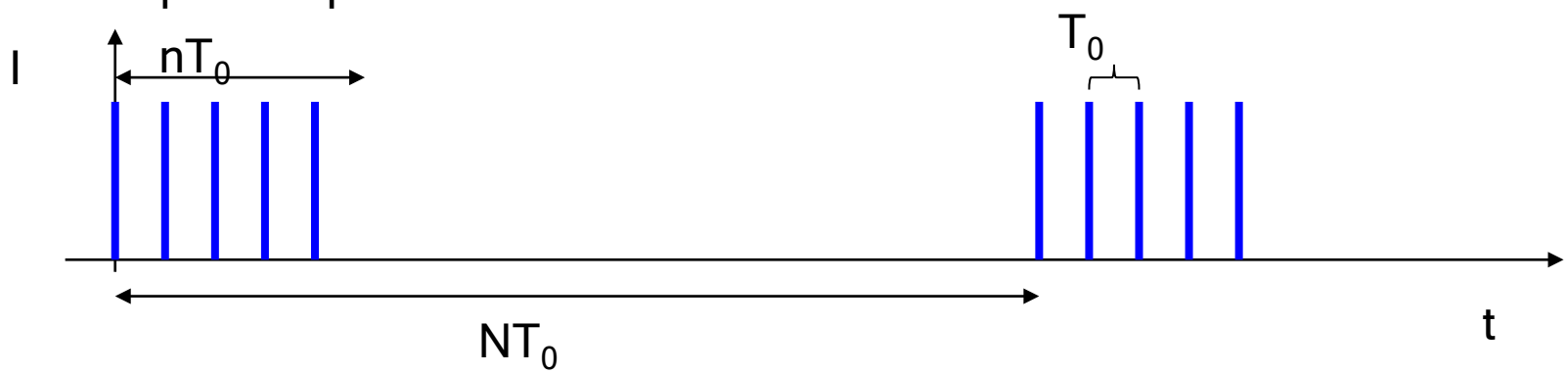

Beam stop for the 5-cell

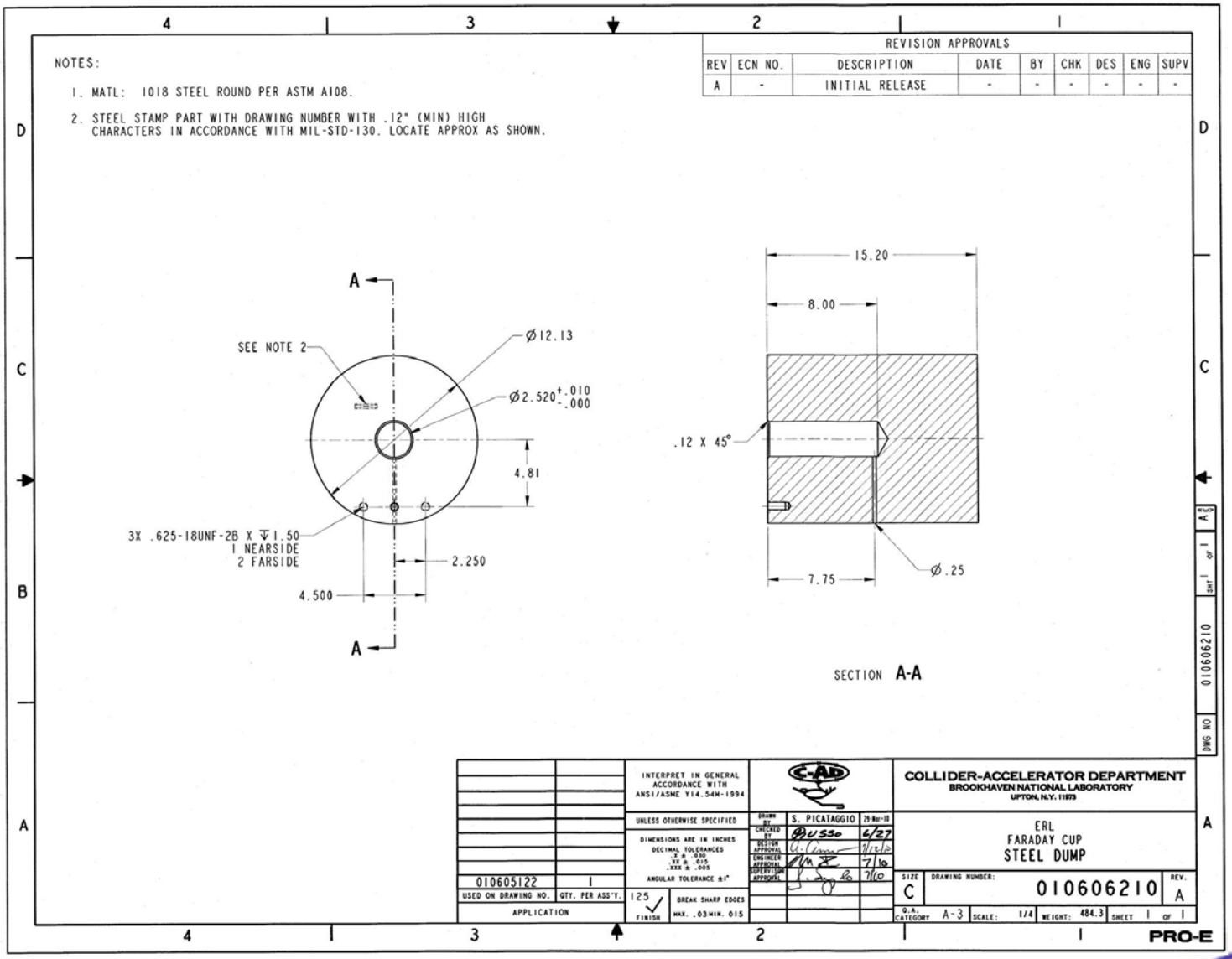

Additional considerations

- The generated, un-attenuated radiation will be inside the ERL accelerator enclosure with a fully operational Access Control System. There would be no risk of generating 5 mRem/h outside the enclosure
- During commissioning, routine radiation surveys by qualified Radiological Control Technicians using portable radiation monitors to verify the radiation-protection controls on a regular basis will be performed.
- During operations, the PPS will be interlocked to a chipmunk.

Steps forward to success of First Beam test:

Prerequisites before to start the beam test:
All equipment has been installed and tested:

1. Cryogenic system completed.
2. Refrigerator operational.
3. SRF Gun installed and cold test performed.
4. Vacuum system.
5. G5test Magnets, power supplies, controls – for 23 MeV test.
6. Beam instrumentation
7. Machine protection system
8. Control system
9. All cables pulled/connected and checked.
10. Laser and laser transport.
11. Cathode, deposition chamber, transport cart.
12. All magnets, laser equipment and instrumentation surveyed and aligned.

Most of the systems/subsystems were reviewed, tested and or presented during the June 4, 2012 ASSRC review at C-AD.

All safety documentation (commissioning procedures, work planning) completed and approved.

Timeline

- We hope for approval of the low-power tests this month.
- We will select an ARR team in 120 days from the approval of the low-power tests.
- Beam from gun expected in April 2013.
- Beam through the linac later in 2013.
- If the schedule holds, ARR for the ERL will be carried out in June 2013

Thank you for your attention

Backup slides: MPS

MPS System

- MPS Is protect the machine (ERL components) from equipment and/or human miss behavior.
- Primarily role was to protect the 50 kW and 1MW RF Systems as well as the SRF cavities
- Now it protects instrumentation, vacuum system, magnets
- Upon fault, an interlock is generated in less than 5 µs (system response time ~ 3-4 µs)
- Fail-safe input states in case of a broken or disconnection wire.
- Faults are latched and time-stamped
- Faults are cleared only via a software (user) reset

MPS protects machinery by summarizing all the inputs and sending it as a summary to RF. Although RF is continuously checking its own critical devices and PASS.

Operation Modes

- 0 Safe: No e-beam, No laser beam, No RF
  - Laser shutter, RF off
- 1 Linac RF studies: No e-beam, No laser beam, RF On
  - Laser shutter, Linac RF allowed
- 2 SRF Gun studies: No e-beam, No laser beam, RF On
  - Laser shutter, SRF cavity RF allowed
- 3 Laser studies/alignment: No e-beam, No RF, Laser on
  - RF is OFF, Laser beam allowed
- 4 Lower current/single pulse (Imax=TBD): e-beam, laser, RF: allowed
- 5 Design current (Imax=1uA) : e-beam, laser, RF: allowed
- 6 Custom

MPS ins/outs table (short version)

Modes	Current limet	Cryo	Vacuum	Gun Arc Det	Linac Arc Det	Water	OTR	YaG	Cathode in place	Gun RF	Linac RF	Laser
0	disable	disable	enable	disable	disable	disable	disable	disable	disable	off	off	off
1	disable	enable	enable	disable	enable	enable	disable	disable	disable	off	on	off
2	disable	enable	enable	enable	disable	enable	disable	disable	(in or out)	on	off	off
3	disable	disable	enable	disable	disable	disable	disable	disable	disable	off	off	go
4	Low limit	enable	enable	enable	enable	enable	enable	enable	(in)	go	go	go
5	High limit	enable	enable	enable	enable	enable	enable	(Out)	(in)	go	go	go
6	Custom	Enable by default, any disabled option should come back to enable after maximum 8 hours										

MPS detailed inputs list

System	MPS INPUTS	Type of Signal	Safe mode Mode 0	5cell studies Mode 1	SRF Gun studies Mode 2	Laser studies Mode 3	Low Current (TE Mode 4	Maximum Cu Mode 5	Custom all inpu Mode 6
SRF:									
	RF 50kW Circulator ArcDet	TTL	OFF	ON	OFF	OFF	ON	ON	ON
	RF 5-Cell Cavity AirSide ArcDet	TTL	OFF	ON	OFF	OFF	ON	ON	ON
	RF 5-Cell Cavity VacSide ArcDet	TTL	OFF	ON	OFF	OFF	ON	ON	ON
	RF Gun FPC1 VacSide ArcDet	TTL	OFF	OFF	ON	OFF	ON	ON	ON
	RF Gun FPC1 AirSide ArcDet	TTL	OFF	OFF	ON	OFF	ON	ON	ON
	RF Gun FPC2 VacSide ArcDet	TTL	OFF	OFF	ON	OFF	ON	ON	ON
	RF Gun FPC2 AirSide ArcDet	TTL	OFF	OFF	ON	OFF	ON	ON	ON
	RF Klystron Window ArcDet	TTL	OFF	OFF	ON	OFF	ON	ON	ON
	RF Klystron Circulator ArcDet	TTL	OFF	OFF	ON	OFF	ON	ON	ON
LLRF:									
	One signal for Gun	TTL	OFF	OFF	ON	OFF	ON	ON	ON
	One signal for 5-cell	TTL	OFF	ON	OFF	OFF	ON	ON	ON
PASS:									
	PASS	Relay	OFF	ON	ON	ON	ON	ON	ON
Cryo:									
	Cryo (5-Cell)	Relay	OFF	ON	OFF	OFF	ON	ON	ON
	Cryo (Gun)	Relay	OFF	OFF	ON	OFF	ON	ON	ON
Vacuum:									
	Vacuum 5-Cell Beam	Relay	OFF	ON	OFF	OFF	ON	ON	ON
	Vacuum Beamline Gate Valve	Relay	OFF	ON	OFF	OFF	ON	ON	ON
	Vacuum Gun FPC Beam	Relay	OFF	OFF	ON	OFF	ON	ON	ON
Water:									
	Water 5-Cell FPC	Relay	OFF	ON	OFF	OFF	ON	ON	ON
	Water 5-Cell FPC Flow	Relay	OFF	ON	OFF	OFF	ON	ON	ON
	Water Gun Temperature	Relay	OFF	OFF	ON	OFF	ON	ON	ON
	Water Gun Flow	Relay	OFF	OFF	ON	OFF	ON	ON	ON
SC Solenoid:									
	Coil1 - QD	Digital	OFF	OFF	ON	ON	ON	ON	ON
	Coil2 - QD	Digital	OFF	OFF	ON	ON	ON	ON	ON
Instrumentation:									
	BPM (16)	TTL	OFF	OFF	OFF	OFF	OFF	OFF	ON
	Profile Monitor (5)	Relay	OFF	OFF	OFF	OFF	OFF	ON	ON
	Pepper Pot (2)	Relay	OFF	OFF	OFF	OFF	OFF	ON	ON
	Beam Loss	TTL	OFF	OFF	OFF	ON	ON	ON	ON
	FCT (ICT)	Analog	OFF	OFF	OFF	OFF	ON	ON	ON
	Scrapers (6)	Relay	OFF	OFF	OFF	OFF	OFF	ON	ON
	Cathode Clamp (Fully extracted)	Relay	OFF	OFF	ON	OFF	ON	ON	ON
	Cathode Clamp (Fully inserted)	Relay	OFF	OFF	ON	OFF	ON	ON	ON
	Heartbeat	Relay	OFF	OFF	OFF	OFF	ON	ON	ON
Laser:									
	Digital Input		OFF	OFF	OFF	ON	ON	ON	ON
	Current Beam Mode	PET page	OFF	OFF	OFF	ON	ON	ON	ON

C-AD Unreviewed Safety Issue (USI) Determination Form

Title of USI Determination: ERL Low Power Test

Description of USI Determination (use attachments): see attachments

Title and Date of Relevant SAD: 2011 C-AD SAD

Associate Chair for ESSHQ or ESSHQ Division Head must initial all applicable determinations and actions. Write N/A for non-applicable. Leave no blanks.

Determinations and Actions	Initial or Indicate N/A
Determination: The current SAD and/or ASE addresses the hazard associated with the proposed work, event or activity.	[ETL]
Determination: This activity does not constitute a USI.	[N/A]
Action: Use this Form, the USI Checklist and attached description, if any, to document the USI Determination until the next revision of the SAD.	[ETL]
Action: Include this USI Determination as a reference on the ESSHQ Division website "Authorization Bases" after approval by the C-AD Associate Chair for ESSHQ.	[ETL]
Determination: The hazard associated with the proposed work is not analyzed or is not correctly bounded in the C-AD SAD and/or it is not controlled by an ASE.	[ETL]
Action: Submit the USI or a revised SAD and/or ASE to the BNL ESH Committee.	[ETL]
Action: Do not perform activity until BNL has approved.	[ETL]
Action: Do not perform activity until DOE has approved.	[ETL]

_____Signature on File_____ _____12-4-12_____
Signature of C-AD ESSHQ Division Head Date

_____Signature on File_____ _____12-4-12____
Signature of C-AD Associate Chair for ESSHQ Date

Exemption Request for Low-Power Testing of ERL SC Gun and 5-Cell Cavity

Introduction

The Collider-Accelerator Department (C-AD) Chairman is requesting the Laboratory ESH Committee (LESHC), the Assistant Laboratory Director for ESH (ALD for ESH) and Head of DOE Area Office (BHSO) approve or recommend for approval, as applicable, a low-power beam test of the ERL. To do these tests, C-AD management requests exemption from paragraph (4).(b) of the DOE Order 420.2C and corresponding SBMS Accelerator Safety Subject Area requirements, and allow the test described below. Specifically, please allow the tests prior to conducting an Accelerator Readiness Review (ARR) for the full ERL accelerator facility. This low power test is needed to optimize the beam to finish construction of the energy-recovery aspects of the accelerator. Systems are undergoing development at this stage. Low-power testing allows the development of operational efficiency. Conducting an ARR at this stage is neither practical nor necessary because of the nature of the hazard and the developmental nature of the low-power beam line. Demonstrating the energy-recovery aspect is necessary to construct a feasible eRHIC. C-AD bases the safety of the exemption request on the limited power and the low-level radiation hazard allowed for the test; that is, this device at this power limit would not likely produce an accessible radiological area.

Background

DOE Order 420.2C, Safety of Accelerator Facilities, Paragraph 3.c.(2) indicates DOE may approve accelerator exemptions, in addition to those examples listed in paragraph 3.c.(1). An exemption would result in not requiring the ERL superconducting gun and 5-cell cavity test to meet the provisions of paragraph 5 of the Order. This opportunity to request an exemption is also in the SBMS Accelerator Safety Subject Area. Such a request requires a review and recommendation for approval by the Laboratory Environmental, Health and Safety Committee (LESHC) and the approval of the BNL ALD for ESH prior to DOE approval.

Low-Power Testing Plan

C-AD will conduct the following low-power tests:

1) Beam out of the gun, and
2) Beam through the 5-cell accelerating cavity.

In both cases, the beam power will be limited to less than 70 watts. The control of the beam power will be done through the setting of the photocathode drive laser, pulse energy and repetition rate.

The photocathodes to be used in these tests are multi-alkali, mostly cesium potassium antimonide. The bunch charges will be less than one nanoCoulomb (nC) with the repetition rate adjusted to maintain the maximum beam power with the given beam energy.

1) The capability of the gun is a maximum beam energy of 3.5 MeV, and
2) The capability of the 5-cell cavity is a maximum beam energy of 25 MeV.

The pulse repetition frequency will be under 2.8 kHz for the maximum charge of 1 nC and maximum energy of 25 MeV. At lower pulse charges, the repetition frequency may be increased accordingly.

In the initial test (1), the diagnostic equipment will be a Faraday Cup (FC), an Integrating Current Transformer (ICT), and beam loss monitors (BLM). See Figure 1.

In the latter test (2), additional diagnostics will be beam position monitors, and beam profile monitors. See Figure 2.

Both tests will have a large array of radiation detectors, ion chambers and photomultiplier tubes (seen in Figures 1 and 2)

C-AD will conduct tests intermittently over a period of seven months after the onset of approved low-power testing. ERL management plans to request an ARR approximately three months (90 days) after the onset of the low-power test.

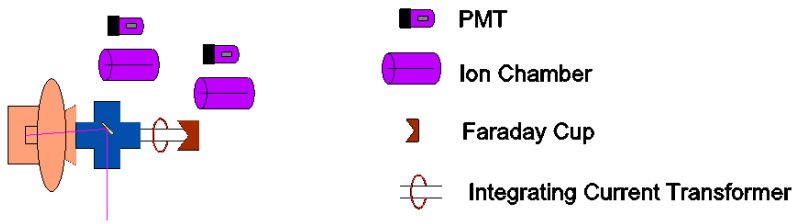

Figure 1 – Initial Test. Gun is on the left.

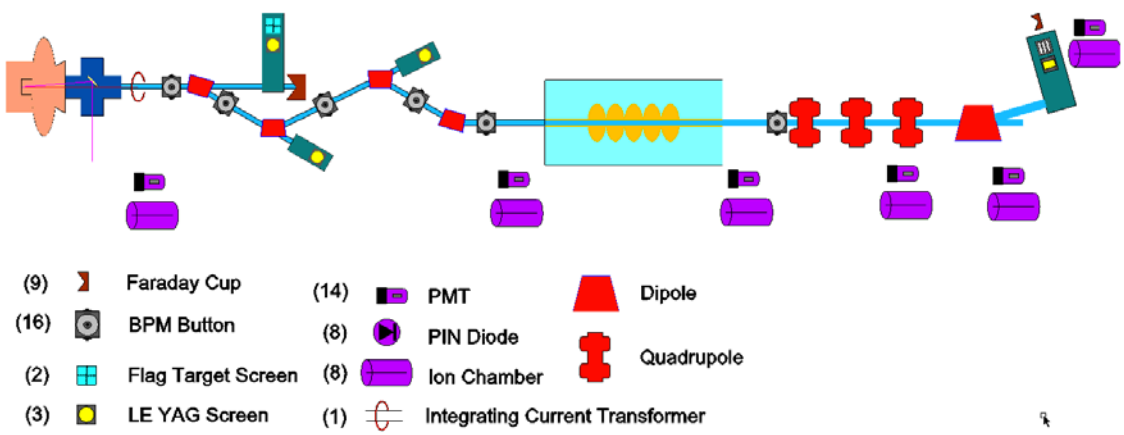

Figure 2 – Later Test

In Figure 2, the dipoles between the gun and the 5-cell cavity bend the beam vertically; that is, either toward the roof or toward the floor. The ERL experimental area sweep checklist addresses this and does not allow access to the roof of the ERL enclosure and access to the Building 912 roof.

Safety Basis for Exemption Request for Low-Power Testing

To test the ERL Superconducting Gun and 5-cell cavity at low power, C-AD management will adhere to an approved ERL Low Power ASE for this specific ERL Superconducting Gun and 5-Cell Cavity Test (see Attachment 1). With exception of Limits for the Maximum Credible Incident, C-AD adopts all Credited Controls and Supports associated with the approved June 6, 2012 ERL ASE, and reproduces them in the ERL Low Power ASE for this test. In the ERL Low Power ASE, C-AD defines a different set of Limits for the Maximum Credible Incident (MCI) in Section 2:

Limits for MCI

2.1. Electron kinetic energy must be limited to 3.5 MeV for the superconducting RF gun.
2.2. The electron beam power leaving the ERL Superconducting Gun or the five-cell cavity must be limited to 70 W averaged over 1 hour.
2.3. Electron kinetic energy limit must be limited to 25 MeV to the dump.

The bases for these MCI-related Limits are that shielding calculations show that a maximum 70 W beam power will allow C-AD to maintain the outside of the ERL enclosure as a Controlled Area under Maximum Credible Incident conditions.

Credited Control to Limit Beam Power during Low-Power Testing

The electron beam power will be limited by using alarming and interlocking radiation monitors around the ERL enclosure. C-AD will place alarming and interlocking radiation monitors outside the enclosure and confirm their appropriate location using fault studies and radiation surveys at the onset of low-power testing. The alarm and interlock set points outside the ERL enclosure will be set such that outside the enclosure, C-AD maintains radiation exposure no greater than that allowed for a Controlled Area in the event of the MCI fault.

Estimated Dose Rate during Low-Power Testing

The ERL enclosure uses bulk shielding and an Access Control System for radiation protection. The enclosure has side walls composed of between four- and eight-feet of light concrete. The thin sections of wall are shadowed from the potential sources with inner shield walls located appropriately. The inner shadow shields subtends all angles for any energy electron-beam bent by dipole magnets, and the roofs of the ERL enclosure and Building 912 are not allowed to be accessed (see RSC Minutes in References Section). The entire enclosure has a single layer of light concrete roof beams four feet thick, except for a transition region where the roof is two layers of beams. This transition region is where the 13 feet ceiling height in the center falls to 9 feet at both ends.

In the ERL configuration in Figure 2, the beam can be mis-steered up or down. A memorandum dated 10-1-2012 by K. Yip to the C-AD Radiation Safety Committee verifies that upwardly mis-steered low-energy beam (3.5 MeV) causes a maximum 7.15 mrem/h at 70 W on the ERL enclosure roof, which has no access, and 0.192 mrem/h at a distance of 20 feet such as the Building 912 roof. The beam would have to bend around the magnets and internal shielding

and then directly hit the 4-foot thick concrete ERL enclosure wall for these fault dose-rates to occur. C-AD appended this calculation to the 2011 C-AD SAD in the ERL USI for Low Power Testing.

In order to determine the effectiveness of the shielding at ERL, the maximum sustained beam loss assumed in the safety analyses section, Chapter 4, of the 2011 C-AD SAD was 1.2 MW for 3.5 MeV injection electrons. In Table 4.13.b. from the C-AD SAD, the experts who did the shield safety analyses assumed that credible sustainable beam losses were 1 W of electron beam at beam injection energy of 3.5 MeV and 60 kW at 25 MeV. The C-AD SAD shielding experts listed estimates of absorbed dose rates at the outside surface of the ERL's shielding for these assumed losses. Their Table in the C-AD SAD is as follows:

Table 4.13.b Dose Outside Prototype ERL Enclosure for 3.5- and 25-MeV Electrons

Condition	Instantaneous Dose Rate From Maximum Beam Loss[a]	Dose Rate From Sustainable Loss[b]	Dose From Sustainable Loss Assuming Interlock Occurs[d]
3.5MeV@ 0 degrees, γ	88,000 mrad/h	0.073 mrad/h	0.0002 mrad
3.5MeV@ 90 degrees, γ	18,000 mrad/h	0.015 mrad/h	0.00004 mrad
25 MeV@ 0 degrees, γ	65,000 mrad/h[c]	4000 mrad/h[c]	10 mrad[c]
25 MeV @ 90 degrees, γ	13,000 mrad/h	800 mrad/h	2.0 mrad
25 MeV neutrons	120 mrem/h	6.0 mrem/h	0.015 mrem

[a] The maximum instantaneous beam loss is 1.2 MW at 3.5 MeV, and 10 MW at 25 MeV, which would terminate after a small fraction of a second.
[b] The sustainable loss is 1 W for 3.5 MeV, and 60 kW for 25 MeV electrons is assumed.
[c] The forward-direction gamma-dose rates were reduced by a factor of 0.005 by the adding 2-feet of heavy concrete in the electron ring.
[d] As with all C-AD interlocking area-dose-rate monitors, a 9-second delay from sensing the trip point's dose rate to stopping of beam is conservatively assumed in SAD analyses.

Using columns 3 and 4 from Table 4.13.b, 0-degree beam, and assuming 70 W maximum sustained beam loss with alarming radiation monitors, then C-AD estimates the maximum sustainable dose rate outside the ERL enclosure at about 5 mrad/h (70 W x 0.073 mrad/h-W). Since C-AD will use both alarming and interlocking radiation monitors, the beam will shut within 9 seconds after reaching a set point of 2.5 mrem/h, and a maximum a 0.014 mrad absorbed-dose is expected (70 W x 0.0002 mrad/W) in such a fault. Because of an additional 2 feet of heavy concrete, 70 W also results in 5 mrad/h and about 0.014 mrad absorbed-dose in a fault with 25 MeV beam. Based on these estimates of absorbed dose in a fault, C-AD concludes no need for a Radiation Area in accessible locations adjacent to the ERL enclosure, and a Controlled Area will suffice for the test. This maximum radiological consequence is the safety basis for the exemption request from requirements in Section 5 of DOE O 420.2C for this specific low-power beam test. This level of hazard produces only local work area impacts and can be safely managed under the provisions of Title 10, Code of Federal Regulations (CFR), Part 835 and Part 851.

Specific Assurance Methods for Low-Power Testing

C-AD management has employed the following assurance methods specific to this test:

1) The C-AD RSC has reviewed the use of alarming and interlocking radiation monitors for this proposed low-power beam test,
2) The C-AD RSC will inspect the ERL enclosure shielding prior to testing with low power beam to ensure all inner shields intercept all possible beam energies and beam-bending by dipole magnets,
3) The C-AD RSC will inspect and approve the locations of alarming and interlocking radiation area monitors inside and outside the ERL enclosure,
4) The C-AD RSC will prepare a Radiation Safety Check-off list for the low-power tests that ensures the ERL access control system is operational, that alarming and interlocking radiation monitors are in place, and that shielding is in place,
5) Qualified operators and the engineered-safety-system owners must sign the Radiation Safety Check-off list prior to enabling beam,
6) The ERL Operations Coordinator will qualify each operator to respond to alarming and interlocking Chipmunk radiation monitors by observing their performance when executing the procedure,
7) The ERL Operations Coordinator will qualify each operator and other staff approved by ERL management to perform sweeps to enable the ERL enclosure for beam by observing their performance in executing the sweep procedure,
8) One qualified ERL operator is required to be present during any period of testing with low-power electron beam,
9) A qualified ERL operator is required to monitor and log beam energy and beam power at the beginning and end of each day of low-power beam tests,
10) The C-AD FS Representative will schedule radiation surveys near the external penetrations to the ERL enclosure and for the general areas outside the ERL enclosure during a test; additional surveys will be performed for several testing configurations that are within the specified MCI Limits (i.e., lower pulse charge and greater repetition frequency),
11) The Chair of the Radiation Safety Committee and the Head of the ESSHQ Division will review radiological surveys and e-log radiation monitor data with the FS Representative at the end of each day of low-power beam tests.
12) The ERL Operations Coordinator will re-sign the RSC checklist if more that 7 days elapses between sequential low-power beam tests after checking that other signatures on the list remain valid.
13) C-AD will place these requirements and the 70 W power limit into C-A OPM 2.5.6 during the period the exemption is in effect and before low-power testing is started.

Request for DOE O 420.2C Exemption in Order to Perform Low-Power Testing

C-AD management requests a seven-month exemption from paragraph (4).(b) of the DOE Order 420.2C and corresponding SBMS Accelerator Safety Subject Area requirements to allow testing of the ERL superconducting gun and 5-cell cavity at low power. Specifically, C-AD management requests low-power tests be allowed prior to conducting an Accelerator Readiness Review (ARR) for the full ERL accelerator facility and permission to commission. C-AD bases

the safety of the exemption request on the limited power, limited duration and the low-level radiation hazard allowed for the test, the review by the Radiation Safety Committee, the use of qualified operators, the implementation of alarming and interlocking radiation monitors, and daily oversight by C-AD managers.

References

June 6, 2012 ERL ASE

LESHC Minutes 12-04; password oper8

LESHC Minutes 11-10; password oper8

LESHC Minutes 11-04; password oper8

LESHC Minutes 08-13; password oper8

RSC Minutes Issued: November 11, 2012

RSC Minutes Issued: October 17, 2012

Attachments

Attachment 1, Commissioning Accelerator Safety Envelope for Low Power Test

Commissioning Accelerator Safety Envelope for Low Power Test

Title of Facility: Prototype Energy Recovery Linac (ERL)

Date of Initial CASE: 4-25-2013

Subsequent Revision Dates:

Signature of Preparer:

_____

Signature of Collider-Accelerator Associate Chair for Accelerator R&D:

_____

Signature of Collider-Accelerator Department Chair:

_____

Signature of Nuclear and Particle Physics Associate Laboratory Director:

_____

Signature of BNL Assistant Laboratory Director for Environment, Safety and Health:

_____

Section 1: Introduction

This CASE defines the Prototype ERL ASE Credited Controls and their Supports that are unique to accelerators necessary to ensure safe operations and to ensure that the potential accelerator-related risks to the public, workers and environment are minimized. Other legal and DOE Order requirements not unique to accelerators are implemented via compliance with the BNL Standards Based Management System (SBMS) Subject Areas.

1.1. The method used by the Collider-Accelerator Department (C-AD) for change control of this CASE is described in the BNL Subject Area on Accelerator Safety.

1.2. A variation away from the Credited Controls and their Supports, which are described in Sections 2, 3, and 4 of this ASE, must be treated as a violation of the ASE and must be a reportable occurrence, as defined by the BNL SBMS Subject Area on Occurrence Reporting. A violation is defined as not satisfying a Credited Control, its Supports or its Authorized Alternative. C-AD staff must make notifications of occurrences according to the requirements in the C-AD Operations Procedure Manual.

1.3. Section 5, Administrative Controls, are not Credited Controls but provide defense-in-depth that supports compliance with the requirements in Sections 2 through 4. A violation of Section 5 requirements will be evaluated by management to determine if a reportable occurrence is needed.

1.4. If a Credited Control or its Supports are not satisfied and it has a specific Authorized Alternative, then take immediate actions to implement the Authorized Alternative or stop the activity that uses the affected equipment as soon as practicable.

1.5. If a Credited Control Requirement or its Supports have no specific Authorized Alternative and is not satisfied, then stop the activity that uses the affected Credited Control as soon as practicable.

1.6. Emergency actions may be taken that depart from a Credited Control or its Supports when no actions consistent with the Credited Control are immediately apparent and when these actions are needed to protect the public, worker and environmental safety. These emergency actions must be approved by the person in charge of facility safety, as defined in the operating procedures, when the emergency occurs and must be reported to C-AD management within 2-hours.

Section 2: Credited Controls

This section contains the Credited Controls that limit accelerator operations in order to protect the environment, workers, and the public by ensuring that those operations are conducted within the assumptions in the approved C-AD SAD. Credited Controls for Prototype ERL operations are:

Credited Controls for Maximum Credible Incident

The following limits are the maximum beam energy and beam power that the Prototype ERL is capable of. These Credited Controls cannot be exceeded without changing the structures, systems and components (SSC) of the Prototype ERL. Changing Prototype ERL SSC requires authorization by C-AD management.

2.1. Electron kinetic energy must be limited to 3.5 MeV for the superconducting RF gun.

2.2. The electron beam power leaving the ERL Superconducting Gun or the five-cell cavity must be limited to 70 W averaged over 1 hour.

2.3. Electron kinetic energy limit must be limited to 25 MeV to the dump.

Credited Control for Radiation Hazard Due to Access

2.4. During beam operations, an access control system (ACS) must prevent access to beam.

Credited Control for Oxygen Deficiency Hazard (ODH)

2.5. Engineered systems (interlocks and alarms) must be in place to minimize the likelihood of injury/illness from a release of inert gas.

Section 3: Credited Control Supports

This section identifies the measurable limitations on Supports for Credited Controls that ensure that Prototype ERL operations do not exceed the Credited Controls in Section 2. These Credited Control Supports are derived from the safety analyses described in the approved C-AD SAD. They are:

Credited Control Supports to Protect against Radiation

3.1. Before beam or other radiation producing operations (e.g. electron gun or 5-cell cavity operations and testing), Prototype ERL enclosures must have all shielding properly in place and configuration controlled.

3.2. During beam or other radiation producing operations (e.g. electron gun or 5-cell cavity operations and testing), the ERL ACS must be functional. This means that the portions of the ACS that prevent exposure to beam radiation or RF generated x-rays inside enclosures and that remove beam or turn off RF when excessive beam loss or x-ray radiation occurs are functional.

3.3. During the beam or other radiation producing operations, area radiation monitors that are interfaced with the ERL ACS to remove beam when excessive beam loss is sensed must be within their calibration date.

3.4. During beam or other radiation producing operations, the locations of area radiation monitors interfaced with the ERL ACS must be configuration controlled.

Credited Control Supports to Protect against an ODH in ERL Accelerator Enclosure, Compressor/Vacuum/Water Building, and the EEBA[1] and NEBA[2] Portions of B912

3.5. When cryogens are charged in the system, exhaust fans and the ODH portion of the ERL ACS must be operable, that is, when the oxygen concentration falls below 18% (nominal) in either the ERL accelerator enclosure or the ERL Compressor/Vacuum/Water Building the associated ODH fan must turn on.

Authorized Alternative: Upon discovery that either exhaust fan is not operable or the ODH portion of the ERL ACS is out of service, entry to the affected building (i.e., ERL accelerator enclosure or ERL Compressor/Vacuum/Water building) is allowed if each entrant has their own 5-minute escape pack (or a self-contained breathing apparatus) and a portable oxygen monitor.

3.6. If the liquid nitrogen (LN) supply line inside Building 912 is charged with LN, and this line is not isolated from the 11,000-gallon LN tank, then the installed building oxygen

[1] East Experimental Building Addition
[2] Northeast Experimental Building Addition

monitors in EEBA, NEBA and the LVTF[3] must alarm locally if the oxygen concentration falls below 18% (nominal).

Authorized Alternative: Upon discovery that any installed oxygen monitor in EEBA, NEBA, ERL or the LVTF is out of service, then entry into EEBA or NEBA portions of Building 912 is allowed as long as requirement 3.7 is satisfied.

3.7. If any of the ODH monitors in NEBA, EEBA, ERL, or the LVTF sense oxygen concentration at 18% (nominal) or fail to be able to sense oxygen levels, then the air-operated valve at the 11,000 gallon LN tank located outside B912 must automatically close to isolate the LN supply to B912.

Authorized Alternative: Upon discovery that the automatic isolation valve at the LN tank is inoperable, the entire EEBA, NEBA portion of B912 including LVTFand SVTF[4] blockhouses and ERL accelerator enclosure, must be emptied of personnel as soon as practicable. Subsequent entry will only be allowed if the LN tank manual isolation valve is closed.

[3] The LVTF is not part of the ERL or its support system but it has a feature that can create an ODH in the EEBA portion of B912.

[4] Small Vertical Test Facility which is not part of the ERL or its support system but is located in EEBA and can be affected by an ODH condition in EEBA

Section 4: Calibration, Testing, Maintenance and Inspection that Supports Credited Controls

The calibration, testing, maintenance or inspections needed to support Credited Controls are:

4.1. The Access Control System must be functionally tested in accordance with requirements in the BNL Radiation Control Manual.

4.2. Area radiation monitors must undergo annual calibration (not to exceed 15 months).

4.3. If cryogens are charged in the system, the ventilation exhaust fans and associated oxygen monitors used to mitigate an oxygen deficiency event must undergo annual testing (not to exceed 15 months).

4.3.1. The ability of the air-operated valve at the 11,000 gallon LN tank outside B912 to isolate the LN tank if any ODH monitor in ERL, NEBA, EEBA or LVTF indicates less than 18% (nominal) oxygen concentration, or if any ODH sensor fails, must be functionally checked annually (not to exceed 15 months).

4.4. Radiological shielding and barriers (e.g., shield blocks, fencing, etc.) must undergo visual inspection prior to operations to ensure that they are in place and functional.

Section 5: Administrative Controls

Administrative controls provide defense-in-depth to help ensure the operational integrity of the Credited Controls during operations. These administrative controls are:

5.1. Minimum Prototype ERL Control Room Staffing

5.1.1. Prototype ERL Control Room: one qualified Operator and one other person (i.e., ERL Operator-in-Training or ERL Physicist) must be on duty when Prototype ERL beam is in operation. During beam operations, one of the two people must remain in the Prototype ERL Control Room at all times.

Authorized Alternative: If the extra person (i.e., ERL Operator-in-Training or ERL Physicist) is incapacitated, the qualified Trained Operator may continue operations as long as manning requirements are restored within two hours.

5.2. Prototype ERL Modification and Controls

5.2.1. Approved Configuration Control procedures must be used to ensure review of modifications against Credited Controls in ASE requirements.

5.2.2. Each Prototype ERL experiment or re-configuration of accelerator components, if any, must be reviewed by C-AD for Configuration Control and safety before running with beam.

5.2.3. An experiment or reconfiguration of the accelerator may lie dormant for a period greater than one year and not require a review during the dormancy period. For experiments that may run more than once in a 12-month period, review must occur as determined by C-AD management before each scheduled run.

5.2.4. Modifications to the Prototype ERL that are determined to increase the frequency or consequences of known hazards or which introduce new hazards must be documented using the Unreviewed Safety Issue determination (USI) process. If a USI exists, the modification may not be implemented without DOE approval.

5.3. Beam loss induced radiation within uncontrolled areas for credible repeated losses must be less than 100 mrem in a year. C-AD shall use BNL's environmental TLD monitors to check the effectiveness of the C-AD radiation control program.

5.4. ODH area classification must comply with the requirements in the BNL SBMS Subject Area, ODH Classification/Controls.

Assistant Laboratory Director, ES&H

BROOKHAVEN
NATIONAL LABORATORY

Building 120
P.O. Box 5000
Upton, NY 11973-5000
Phone 631 344-4549
Fax 631 344-7618
goode@bnl.gov

managed by Brookhaven Science Associates
for the U.S. Department of Energy

www.bnl.gov

June 3, 2013

Mr. Frank Crescenzo
Site Manager
Brookhaven Site Office
U.S. Department of Energy
Upton, NY 11973-5000

Dear Mr. Crescenzo:

Subject: Request for Approval of the Low Power Testing and Commissioning ASE (CASE) of the Prototype Energy Recovery Linac (ERL)

I concur with the Laboratory ESH Committee (LESHC) recommendation to approve the exemption from an Accelerator Readiness Review of the full Prototype ERL Facility for the Low Power Testing (less than 70 W).

I am submitting this CASE to the Brookhaven Site Office for review and BHSO's approval of the CASE and the low power testing. Attached are relevant documents to assist you.

Sincerely yours,

George Goode
ALD, ESH

Attachments:

1. C-AD USI Determination "ERL Low Power Test", signed 12/4/12
2. Exemption Request for Low-Power Testing of ERL SC Gun and 5-Cell Cavity
3. Commissioning ASE for the Low Power Test of the Prototype Energy Recovery Linac (ERL) dated 4/25/13

Copy to:
M. Bebon, D. Gibbs, W. Gunther, E. Lessard, B. Mueller, E. Nowak, T. Roser, C. Schaefer, G. Shepherd, C. Conrad

BROOKHAVEN NATIONAL LABORATORY
LASER CONTROLLED AREA
STANDARD OPERATING PROCEDURE (SOP)

This document defines the safety management program for the laser system(s) listed below. All American National Standard Institute (ANSI) Hazard Class 3B and 4 laser systems must be documented, reviewed, and approved through use of this form. Each system must be reviewed *annually*. Modify the template for this document to fit your particular circumstance.

System description: Commercial and R&D laser systems, pulse conditioning systems (eg temporal and spatial shaping), transport lines, and pulse diagnostic systems for using laser pulses in accelerator research and development systems
1) Lumera system: Commercial high power Nd:YVO_4 laser system and beam transport line. The laser system coupled with beam shaping and transport will be an integral part of photo-injector of the R&D high current Energy Recovery Linear Accelerator (ERL).
2) Cheetah system. Commercial high power Nd:YVO_4 laser used in photo-injector R&D experiments
3) Aculight system. R&D high power fiber laser. To be evaluated for high rep-rate operation of the ERL
4) Optilab system: 8 watt, 1560 nm, nanosecond pulsed fiber laser system for Gatling gun project.
5) Picolo system: sub-nanosecond Q-switched Nd:YAG laser for 112 MHz gun project

Location: Building 912, ERL Laser room

LINE MANAGEMENT RESPONSIBILITIES

The Owner/Operator(s) for this laser is/are listed below. The Owner/Operator is the Line Manager of the system and must ensure that work with this laser conforms to the guidance outlined in this form.

Owner/Operator:

Name: Brian Sheehy *Signature:* [signature] *Date:* 2/20/13

AUTHORIZATION

Work with all ANSI Class 3B and 4 laser systems must be planned and documented with this form. Laser system operators must understand and conform to the guidelines contained in this document. This form must be completed, reviewed, and approved before laser operations begin. The following signatures are required. Additional signatures, *e.g.*, the ALSO are to be added to this signature block when necessary.

Chris Weilandics	[signature]	2/21/2013
BNL LSO printed name	*Signature*	*Date*
Asher Etkin	[signature]	2-21-2013
Department ES&H Coordinator printed name	*Signature*	*Date*
Thomas Roser	[signature]	2-21-2013
Department Chair/Division Head printed name	*Signature*	*Date*

BROOKHAVEN NATIONAL LABORATORY
LASER CONTROLLED AREA
STANDARD OPERATING PROCEDURE (SOP)

This document defines the safety management program for the laser system(s) listed below. All American National Standard Institute (ANSI) Hazard Class 3B and 4 laser systems must be documented, reviewed, and approved through use of this form. Each system must be reviewed *annually*. Modify the template for this document to fit your particular circumstance.

System description: Commercial and R&D laser systems, pulse conditioning systems (eg temporal and spatial shaping), transport lines, and pulse diagnostic systems for using laser pulses in accelerator research and development systems *1) Lumera system: Commercial high power Nd:YVO_4 laser system and beam transport line. The laser system coupled with beam shaping and transport will be an integral part of photo-injector of the R&D high current Energy Recovery Linear Accelerator (ERL).* *2) Cheetah system. Commercial high power Nd:YVO_4 laser used in photo-injector R&D experiments* *3) Aculight system. R&D high power fiber laser. To be evaluated for high rep-rate operation of the ERL* *4) Optilab system: 8 watt, 1560 nm, nanosecond pulsed fiber laser system for Gatling gun project.* *5) Picolo system: sub-nanosecond Q-switched Nd:YAG laser for 112 MHz gun project*
Location: Building 912, ERL Laser room

LINE MANAGEMENT RESPONSIBILITIES

The Owner/Operator(s) for this laser is/are listed below. The Owner/Operator is the Line Manager of the system and must ensure that work with this laser conforms to the guidance outlined in this form.

Owner/Operator:		
Name: Brian Sheehy	*Signature:*	*Date:*

AUTHORIZATION

Work with all ANSI Class 3B and 4 laser systems must be planned and documented with this form. Laser system operators must understand and conform to the guidelines contained in this document. This form must be completed, reviewed, and approved before laser operations begin. The following signatures are required. Additional signatures, *e.g.*, the ALSO are to be added to this signature block when necessary.

Chris Weilandics		
BNL LSO printed name	*Signature*	*Date*
Asher Etkin		
Department ES&H Coordinator printed name	*Signature*	*Date*
Thomas Roser		
Department Chair/Division Head printed name	*Signature*	*Date*

APPLICABLE LASER OPERATIONS
X Operation X Maintenance ☐ Service ☐ Specific Operation (specify)
OPERATION AND MAINTENANCE

RELATIONSHIP TO OTHER DOCUMENTS

Specifically name other documents, (such as ESRs, SADs/SARs, other SOPs) that describe hazards present in the Laser Controlled Area outside the scope of this document.
Prototype Energy Recovery Linac, Building 912, Safety Assessment Document [Draft], June 30, 2008

LASER SYSTEM HAZARD ANALYSIS

Hazard analysis requires information about the laser system characteristics and the configuration of the beam distribution system. The analysis includes both laser (light) and non-laser hazards. A Nominal Hazard Zone (NHZ) analysis must be completed to aid in the identification of appropriate controls. Laser system characteristics necessary for eyewear calculations and NHZ analysis are described along with the results in the PPE section of this document.

LASER SYSTEM CHARACTERISTICS						
Laser Type *(Argon, CO_2, etc.)*	Wavelength(s) (nm)	ANSI Class	Maximum Power or Energy/Pulse (W or J)	Pulse Length (s)	Repe-tition Rate (Hz)	Beam Dia-meter (mm)
Nd:YVO4 (Lumera)	1064 nm 532 nm (SHG) 355 nm (THG) 266 nm	4	20 W 10 W 6 W <1 W	<12 ps	9.381 MHz	~1 mm - 2 cm
Nd:YVO4 (Time-Bandwidth Cheetah)	1064 nm 532 nm (SHG) 266 nm	4	15 W 5 W 250 mW	12 ps < 12 ps < 12 ps	81.25 MHz	~1 mm - 2 cm
Aculight MOPA (modulated diode seed + fiber amplifier)	1064 nm 532 nm 975 nm	4	100 W 45 W 10 W max	50ps 50 ps CW	700 MHz 700 MHz CW	~1 mm - 2 cm NA*
Optilab Fiber laser	1560 nm	4	15 W	1 nsec	704 kHz	1 mm

Innolas Picolo AOT-1 Q-switched Nd:YAG laser	266 nm 532 nm 1064 nm	4	15 uJ/1 kHz 50 uJ/1 kHz 100 uJ/1 kHz	800 psec	0 to 5 kHz	0.2 mm
Test & Alignment Lasers	532 nm 633 nm	3A max		CW		~1 mm - 2 cm

*The 975 nm is residual pump light which may be emitted from cleaved fibers when working inside the laser enclosure or when routing such fibers directly out of the enclosure. While the light so emitted does not form a well defined spot, it is still hazardous.

Applicable Laser Operations:
*Describe the scope of the work to be done, and how the laser system is used. Provide information regarding unusual circumstances necessary for evaluation of hazards by the LSO not provided elsewhere in this document (*e.g.*: laser beams entering other equipment such as vacuum chambers & microscopes or propagated into unexpected places/directions).*

The operations laser will be transported from the laser room to the ERL block house to irradiate the photocathode in a super conducting RF injector to generate electron beams for subsequent acceleration. The laser beam will enter the electron beam line vacuum through a vacuum flange.

The other lasers are used to further the development of the ERL, electron cooling, and eRHIC efforts. This includes development of sources to drive electron guns and the development of optical diagnostics. Achieving these ends depends sensitively on laser pulse characteristics, so a good deal of experimentation with, for example, temporal and spatial shaping, spectral manipulation and compression of laser pulses is required.

Laser System Configuration:
Describe the laser beam path for fixed components of the system, and provide a functional/block diagram for complicated beam paths. Photographs may be used where they convey sufficient information. Note that Engineering Controls are described in a separate section below.

Identify hazards mitigated or created by the placement, movement, and/or status of components. Examples include any protective housings, beam stops, beam enclosures, and any critical optics (mirrors or lenses that could misdirect the beam and result in personnel hazard).

1) Lumera System The operations laser has manual controls for starting up, operating and shutting down various sub-systems.

This laser uses various optical components such as mirrors, polarizers, lenses, Pockel's cell etc in a fixed optical layout. The laser system configuration illustrating beam path is attached in the **Appendix I**.

The beam path in the laser beam transport system for beam delivery at the photocathode, which is sited in block house, is also shown in the **Appendix II**.

2)Cheetah System. This laser will use various optical components to steer, attenuate and otherwise control it for use in experiments. Attenuated output will be launched into Fiber optic for use in photo-injector R&D experiments in external, enclosed, protected areas.

3)Aculight system. Beam will be manipulated with various optical components in order to evaluate its suitability for use as a high-repetition-rate driver for the ERL photoinjector. At times this will require opening the laser enclosure or routing a fiber outside of the enclosure and examining its output. These operations can release 975 nm light from the pump lasers into the working area, and so protective eyewear for 975 nm must be worn at these times.

4) Optilab fiber laser system and Innolas Q-switched system: System will be tested in ERL Laser room for ultimate use elsewhere, so beam will always be fully contained in ERL Laser Room.

For specific *laser-related* hazards below, provide details (types, quantities, use) as appropriate. Details of non-laser related hazards should be cross-referenced to the other documents cited above.:

☐ **Cryogen Use**

None

☐ **Chemicals & Compressed Gases**

None

☒ **Electrical Hazards**

The laser systems have standard electrical hazards - 110 V / 60 Hz power supply line.

Pulse picker unit of laser system also uses high voltage switching to reduce repetition rate of amplified pulses while initial ramp-up process. The high voltage supply is included in the laser unit. Maintenance for any failure of high voltage circuitry is done only by the LUMERA representatives.

☐ **Other Special Equipment**

Equipment used with the laser[s] that may introduce additional hazards.

None.

DESCRIBE CONTROLS

Recognition, evaluation, and control of laser hazards are governed by the following documents:

American National Standards Institute (ANSI) Standard for Safe Use of Lasers (ANSI Z136.1-2007)

BNL SBMS Sections:
Laser Safety Subject Area
Electrical Safety Subject Area: Interlock Safety For Protection Of Personnel

ENGINEERING CONTROLS

☒ Beam Enclosures
☒ Beam Stop or Attenuator
☒ Activation Warning System
☐ Ventilation
☐ Protective Housing Interlocks
☒ Key Controls
☒ Other Interlocks
☒ Emission Delay
☐ Other

Describe each of the controls in the space provided below this text. Interlocks and alarm systems must have a design review and must be operationally tested every six months. Controls incorporated by the laser manufacturer may be referenced in the manuals for these devices. **If any of the controls utilized in this installation requires a design review by the LSO/ALSO and the LESO, a copy of the design review documentation and written testing protocol must be on file. Completed periodic interlock testing checklists should be retained to document the testing history.**

Engineering Controls Description:

Access Control (Other Interlocks): Access to the laser room is controlled by ERL personnel protection system, which is the responsibility of the C-A access controls group. The system design, construction and operation are subject to QA-1requirements. There are three access states for the room:

Maintenance: Room accessible to non-laser-trained personnel*. All lasers must be non-operable in this state. Class 4 lasers must be keyed out, interlocked out, or LOTO'ed. Test and alignment lasers must be disconnected from their power source.

General Access: Room accessible to non-laser-trained personnel. All lasers are off or shuttered The ERL operations laser (355 or 532 nm output of the Lumera laser), will have a double-shuttering system that permits the laser amplifier to continue running while being blocked by a primary shutter, with a reachback to a second shutter in case the primary shutter fails. All other lasers will be off during General Access.

Laser controlled-access mode. Room accessible only to laser-trained personnel authorized to work in the area, or persons accompanied by such personnel in accordance with BNL and C-AD laser safety requirements. For personnel protection purposes, lasers are assumed to be emitting in this state. As there are a number of lasers in the room, the safest approach to protect untrained personnel from accidental exposure is a physical barrier to entry into the room itself. In Restricted Access, entry will be token controlled: only trained and authorized personnel will possess an RF token, which must be read in order for the door to unlock. In addition all class 4 lasers will have an interlock that terminates emission from within or immediately outside the laser

housing, which can be reached back to should the system determine that the authorization system is malfunctioning, that the door has been breached without authorization, or that any other fault condition deemed an appropriate trigger by Access Controls has occurred.

ERL Operations: When laser is to be directed into the ERL blockhouse, the entire blockhouse becomes an interlocked laser controlled area. A description of the area and interlock system is included in the Addendum to this SOP, *Laser Operation within the ERL blockhouse enclosure.* All regulations of this SOP apply equally to activities within the expanded laser controlled area.

*laser-trained personnel = personnel who have completed all applicable BNL laser safety training.

To put the room in the laser controlled access mode requires that the room be cleared of all untrained personnel by an authorized person. The status of the room is indicated by illuminated signs at the doors.
Clearing Procedure: Trained operator announces that laser operation is to commence and requires all non-trained personnel to leave the laser room. Operator will walk the length of the room, checking behind the equipment racks and any other obstructions to check for personnel before interlocking the room by swiping his RF token at the station located at the far end of the room.
The design documentation is maintained in the C-A design room documentation system. Certification test is done by the access controls group using procedures in the C-A OPM system.
The most common mode will be *laser-controlled access*. *Maintenance mode* will be the preferred mode when it is necessary for untrained personnel to work in the area. *General Access mode* is needed primarily to ensure the stability of the operations laser during experimental runs.

Beam Enclosures: Various laser subsystems (oscillator, amplifier) have their enclosures to block stray radiations. The laser beam in the block house will be enclosed for most of the beam path. Necessary gaps in the enclosure will be too small for the beam to escape.

Beam stop or dump: Various beam stops or dumps have been incorporated in the laser system by the manufacturer. An attenuator will be used to adjust the beam power into the electron injector. This attenuator will also be used during alignment process to reduce the beam power.

Key controls: The Lumera laser and the Cheetah-X laser have been supplied by the manufacturer with a turn-key switch to enable laser operation
Emission Delay: There is an emission delay built into the Lumera and Cheetah-X laser start up procedures.

Activation Warning System: The laser system has dedicated laser activation warning system associated with its operation. The warning (bulb lights up) signs when laser is energized/ turned on. These sign have been displayed outside the laser room and in the front door of the laser room.

ADMINISTRATIVE CONTROLS

☒ Laser Controlled Area ☒ Signs ☒ Labels ☒ Operating Limits

Class 3b and 4 lasers are required to be operated in Laser Controlled areas with appropriate warning signs and labels. The format and wording of laser signs and labels are mandated by BNL and ANSI standards. Only the standard signs are acceptable. Standard signs are available from the BNL Laser Safety Officer. All lasers must have a standard label at least indicating the system's wavelength and power. Required labels must remain legible and attached. The manufacturer should label commercial systems.

Describe administrative operational limits (e.g., requirements to operate at reduced power) if appropriate.

Standard Operating Procedures (SOPs) are required for Class 3B and Class 4 laser system operation, maintenance/servicing and laser alignment. The SOPs need only contain the safety information necessary to perform these tasks and identify appropriate control measures including postings (showing required ODs for eyewear and ANSI hazard class) and any additional personal protective equipment required. The BNL Laser Safety Officer must approve SOPs and copies should be available at the laser installation for reference and field verification of stated control measures.

Describe additional controls required to maintain laser operation. May or may not require beam access. Follows manufacturer instructions where appropriate. Routine maintenance: replacing consumables (flashlamps, gases, dyes, etc.) Non-routine service: Less frequent: Replacing damaged components, diagnostics, etc.

Outside service personnel.
Indicate how outside service personnel are trained and supervised. Work performed by outside service personnel is planned according to the Work Planning and Control SBMS subject area and regulated by the Guest and Visitors SBMS subject area.

The laser is housed in a restricted area (laser controlled area as described in engineering control section of this document).

Only laser trained (qualified) and emergency personnel have access to the laser room.

All entrances to the laser room are posted with laser warning signs.

Labels depicting laser wavelengths, power and hazard class have also been posted.

<u>Operation:</u>

Describe controls for routine use and adjustments of laser system(s).

While the laser systems are in general serviced by the manufacturer's representative for any operational difficulties, the following general safety guidelines must be followed for its operation and maintenance.

1. The administrative and engineering controls are to be followed prior to operating the laser system.

.

2. Initial alignment of the laser should be performed using only low power beam (either by reducing pulse repetition rate or using another collinear low power laser) and general safety guidelines must be followed as listed below.

<u>Maintenance/Service:</u>

<u>Alignment:</u>

As most laser accidents occur during alignment, provide a description of routine procedures where appropriate and controls to mitigate the hazards. For non-routine procedures, provide a safety envelope necessary to protect workers. This includes activities such as initial system/experimental alignment.

1. Plan the optical layout, identifying sources of the stray radiation and means to block the unwanted radiations.

2. To minimize the accidental reflections, take off watches, rings, dangling badges, necklaces, reflective jewelry before beginning any alignment activities. Consider using non-reflective tools.

3. Assemble all equipment and materials needed prior to beginning the alignment.

4. Remove all unnecessary equipment, tools, combustible materials to minimize the possibility of stray reflections and non beam accidents.

5. Only authorized personnel are allowed to perform laser beam alignment.

6. Position the optics and perform the alignment with low power laser beams.

7. Check and block stray reflections using (non flammable) beam blocks.

8. For invisible radiation e.g. IR/ UV, use appropriate fluorescent materials to view the beam path indirectly.

9. **All personnel shall wear PPE in the controlled area**.

10. No intra-beam viewing is allowed unless specifically evaluated and approved by the LSO/ALSO. Intrabeam viewing is to be avoided by using cameras or fluorescent devices.

11. Normal laser hazard controls shall be restored when the alignment is completed. This includes enclosures, covers, beam blocks/barriers have been replaced, and affected interlocks checked for proper operation.

<u>Laser system configuration changes:</u>

*Changes to the laser system can result in new concerns about safety or damage to equipment. Describe how changes are communicated between coworkers (*e.g.*,: lab notebooks, logs, whiteboards).*

PERSONAL PROTECTIVE EQUIPMENT

Skin Protection: If the potential exists for damaging skin exposure as determined by the LSO (particularly for UV lasers 295-400 nm or welding/cutting applications), describe the hazard(s) and the method(s) used for mitigation. Skin-covers and / or sun-screen creams are recommended.

Eyewear: All laser protective eyewear must be clearly labeled with the optical density and wavelength for which protection is afforded. Eyewear should be stored in a designated sanitary location. Eyewear must be routinely checked for cleanliness and lens surface damage.

1. For invisible beams, eye protection against the full beam must be worn at all times unless the beam is fully enclosed.
2. For visible beams, eye protection against the full beam must be worn at all times during gross beam alignment.
3. Where hazardous diffuse reflections are possible, eye protection with an adequate Optical Density for diffuse reflections must be worn within the nominal hazard zone at all times.
4. If you need to operate the laser without wearing eye protection against all wavelengths present, explain the circumstances and the precautions that will be taken to prevent eye injury.

Appropriate laser goggle must be used when operating laser even at smaller pulse repetition rates for all laser wavelengths.

Define eyewear optical density requirements by calculation or manufacturer's reference and list other factors considered for eyewear selection. The BNL Laser Safety Officer will assist with any required calculations.

Most accidents occur during alignment. Extra care must be taken during alignment. Eyewear must be worn during alignment, but it must be remembered that eyewear is NOT the first level of laser safety. Eyewear protects the wearer only when all other safety procedures and equipment have failed. Better protection is provided by careful consideration of procedures and proper beam management.

LASER SYSTEM CHARACTERISTICS LUMERA, CHEETAH-X, AND INNOLAS LASERS						
Laser Type *(Argon, CO_2, etc.)*	Wavelength(s) (nm)	ANSI Class	Maximum Power or Energy/Pulse (J or W)	Pulse Length (s)	Repe-tition Rate (Hz)	Beam Dia-meter (mm)
Nd:YVO4 (Main laser)	1064 nm 532 nm (SHG) 355 nm (THG) 266 nm	4	20 W 10 W 6 W < 1 W	<12 ps	9.381 MHz	~1 cm
Nd:YVO4 (Time-Bandwidth Cheetah)	1064 nm 532 nm (SHG) 266 nm	4	15 W 5 W 250 mW	12 ps < 12 ps < 12 ps	81.25 MHz	~1 mm - 2 cm
Innolas Picolo AOT-1 Q-switched Nd:YAG laser	266 nm 532 nm 1064 nm	4	15 uJ/1 kHz 50 uJ/1 kHz 1064 uJ/1 kHz	800 psec	0 to 5 kHz	0.2 mm

EYEWEAR REQUIREMENTS					
Laser System Hazard	Wavelength (nm)	Calculated Intra-beam Optical Density	Diffuse Optical Density*	NHZ** (meters)	Appropriate Eye Wear***
Nd:YVO4	1064 nm	4 (10 sec.)	0.5 (600sec.)	0.36 m	see below
Nd:YVO4	532nm	4 (0.25 sec.)	0.9 (600 sec.)	0.56 m	See below
Nd:YVO4	355nm	4 (10 sec.)	0.6 (600 sec.)	0.4 m	See below
Nd:YVO4	266 nm	5.63 (10 sec.)	2.2 (600 sec.)	2.5 m	See below

EYEWEAR SPECIFICATIONS		
Laser System Eyewear Identification***	Wavelengths	Optical Density

UV goggles (266 nm and 355 nm) (These are transparent goggles and marked "UV")	190nm-360 nm	OD > 9
All wavelength goggles (1064 nm, 532 nm, 355 nm and 266 nm) (These are dark colored goggles marked "All wavelength")	190nm-520 nm 520 nm-532 nm 850nm -1080 nm	OD >9 OD > 7 OD >7

LASER SYSTEM CHARACTERISTICS ACULIGHT LASER						
Laser Type *(Argon, CO_2, etc.)*	Wavelength(s) (nm)	ANSI Class	Maximum Power or Energy/Pulse (J or W)	Pulse Length (s)	Repe-tition Rate (Hz)	Beam Dia-meter (mm)
Aculight MOPA (modulated diode seed + fiber amplifier)	1064 nm 532 nm 975 nm	4	100 W 45 W 10 W	50 ps 50 ps CW	700 MHz 700 MHz CW	~1 mm - 2 cm NA

EYEWEAR REQUIREMENTS					
Laser System Hazard	Wavelength (nm)	Calculated Intra-beam Optical Density	Diffuse Optical Density*	NHZ** (meters)	Appropriate Eye Wear***
Aculight MOPA	1064	4.7	1.2	0.8	
Aculight MOPA	532	4.64	1.5	0.74	
Aculight MOPA	975	4.3	1	0.5	

EYEWEAR SPECIFICATIONS FOR ACULIGHT LASER		
Laser System Eyewear Identification***	Wavelengths	Optical Density
Argon-NDGA or equivalent (marked as "All laser" goggles) Laser filter 205 or filter 305 based glasses	1060 nm 975 530 975 nm 1060 nm	14 7 7 5+ 7+

LASER SYSTEM CHARACTERISTICS OPTILAB FIBER LASER						
Laser Type *(Argon, CO_2, etc.)*	Wavelength(s) (nm)	ANSI Class	Maximum Power or Energy/Pulse (J or W)	Pulse Length (s)	Repe-tition Rate (Hz)	Beam Dia-meter (mm)
Optilab 1.5 um fiber laser	1560 nm	4	15 W	1 nsec	704 kHz	1 mm

EYEWEAR REQUIREMENTS					
Laser System Hazard	Wavelength (nm)	Calculated Intra-beam Optical Density	Diffuse Optical Density*	NHZ** (meters)	Appropriate Eye Wear***
Optilab 1.5 um fiber laser	1560	4.3	0	0.3	LG 11 glasses (grey lens)

EYEWEAR SPECIFICATIONS FOR OPTILAB FIBER LASER		
Laser System Eyewear Identification***	Wavelengths	Optical Density
LG 11 glasses (grey lens)	1560 nm	>6.6

* Diffuse ODs are calculated assuming a 600 second exposure, a viewing distance of 20 cm, perfect reflectivity, and viewing normal to the surface. The ODs required can decrease for more typical conditions in the laboratory.

**The Nominal Hazard Zone is that zone or distance inside which exists a hazard to the eye from a diffuse reflection (as well as direct or specularly reflected light) for the time specified, in this case, 600 seconds (10 minutes).

***Specified eyewear may not be the only possible option, but represents an approved choice; depending on other laser hazards present in the lab, other eyewear may be acceptable provided the optical densities are equivalent or greater than those required.

LASER SYSTEM CHARACTERISTICS PICOLO LASER						
Laser Type *(Argon, CO_2, etc.)*	Wavelength(s) (nm)	ANSI Class	Maximum Power or Energy/Pulse (J or W)	Pulse Length (s)	Repe-tition Rate (Hz)	Beam Dia-meter (mm)
Innolas Picolo AOT-1 Q-switched Nd:YAG laser	1064 nm 532 nm 266 nm	4	100 µJ 50 µJ 15 µJ	800 ps 800 ps 800 ps	0 to 5 kHz 0 to 5 kHz 0 to 5 kHz	0.2 mm 0.2 mm 0.2 mm

EYEWEAR REQUIREMENTS					
Laser System Hazard	Wavelength (nm)	Calculated Intra-beam Optical Density	Diffuse Optical Density*	NHZ** (meters)	Appropriate Eye Wear***
Picolo Nd:YAG	1064	4.24	1.2	0.8	
Picolo Nd:YAG	532	4.54	1.9	1.72	
Picolo Nd:YAG	266	3.8	0.4	0.31	

EYEWEAR SPECIFICATIONS FOR PICOLO LASER		
Laser System Eyewear Identification***	Wavelengths	Optical Density
UV goggles (266 nm and 355 nm) (These are transparent goggles and marked “UV”)	190nm-360 nm	OD > 9
All wavelength goggles (1064 nm, 532 nm, 355 nm and 266 nm) (These are dark colored goggles marked “All wavelength”)	190nm-520 nm 520 nm-532 nm 850nm -1080 nm	OD >9 OD > 7 OD >7

TRAINING

LASER SAFETY TRAINING

Laser Operators must complete sufficient training to assure that they can identify and control the risks presented by the laser systems they use. Owners/Operators must receive a baseline medical surveillance eye examination, documented in the Occupational Medicine Clinic before using lasers. Owners/Operators and Qualified Laser Operators must complete the awareness level BNL online training course (TQ-LASER) every two years.

- Qualified Laser Operators must also complete system-specific orientation with the system owner/operator. **System-specific training that includes** Review of SOPs, and Reviews of working and emergency procedures will be given to all users and record that includes Trainee name and signature, Owner/Operator signature, Date shall be maintained in the laser room.

Appendix I

[a] Block diagram of Lumera Laser

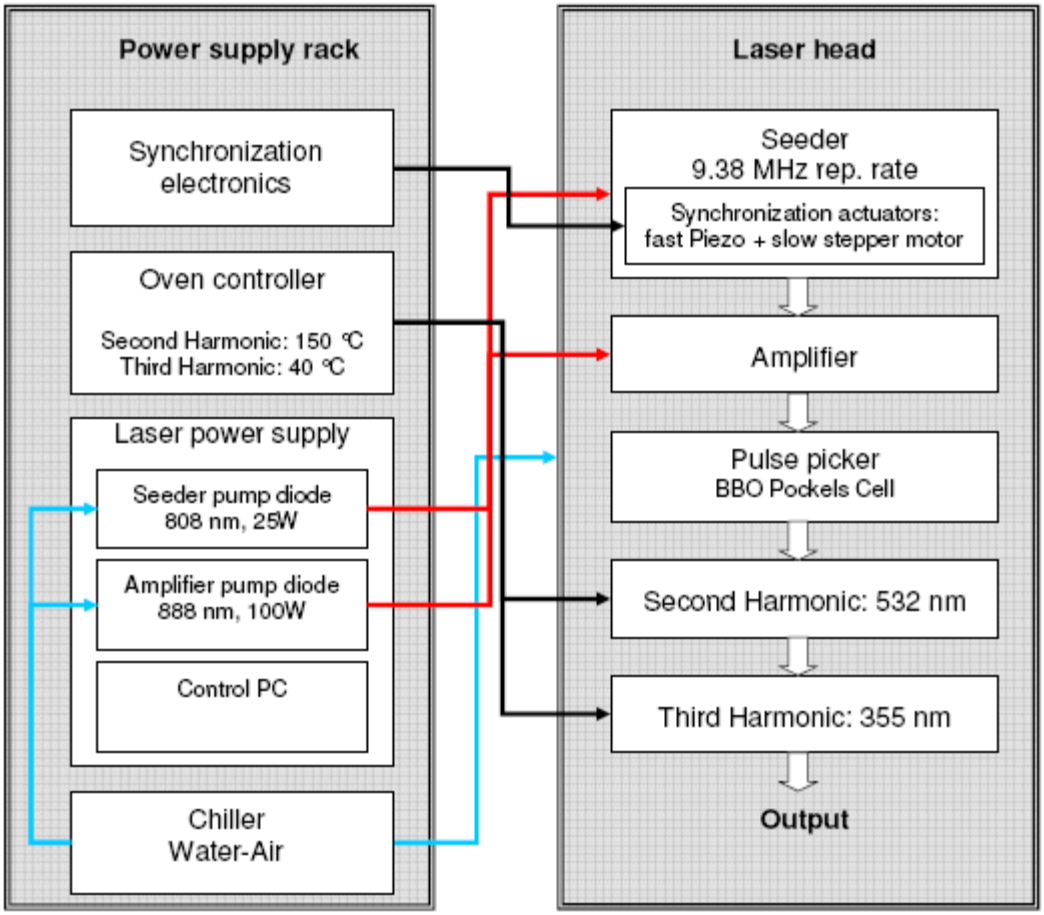

Appendix I

[b] Ray diagram of Lumera Laser

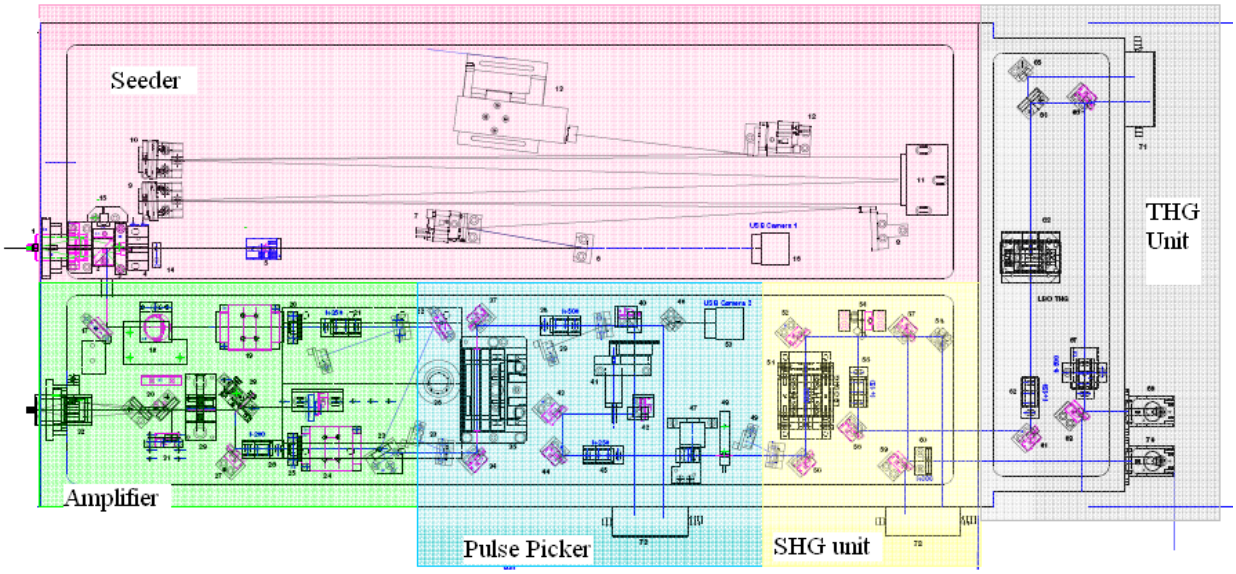

Note: Every component of this system is sealed and will not be opened unless specified by the manufacturer. Only amplified radiation emerges from the dedicated ports.

Appendix II
Layout of Laser Beam Transport Line

(Top view)

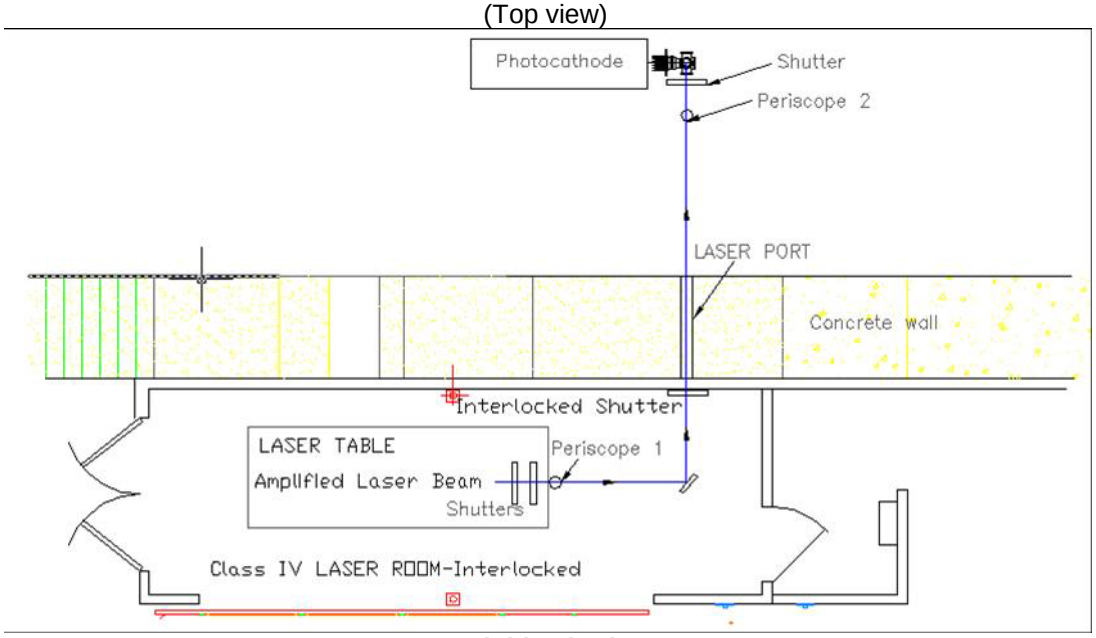

(Side view)

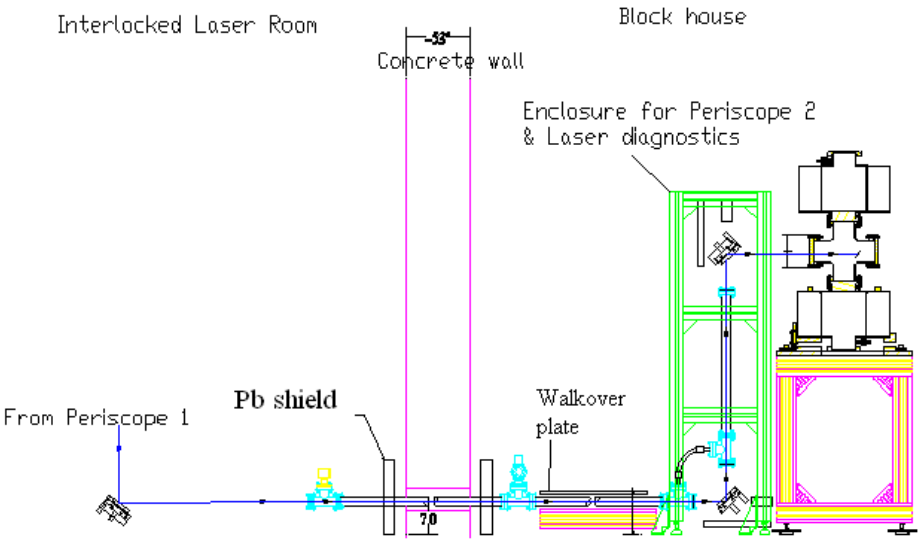

Note: Line shown by blue color is the laser beam path from laser room to block house. The beam path in is covered by metal enclosures.

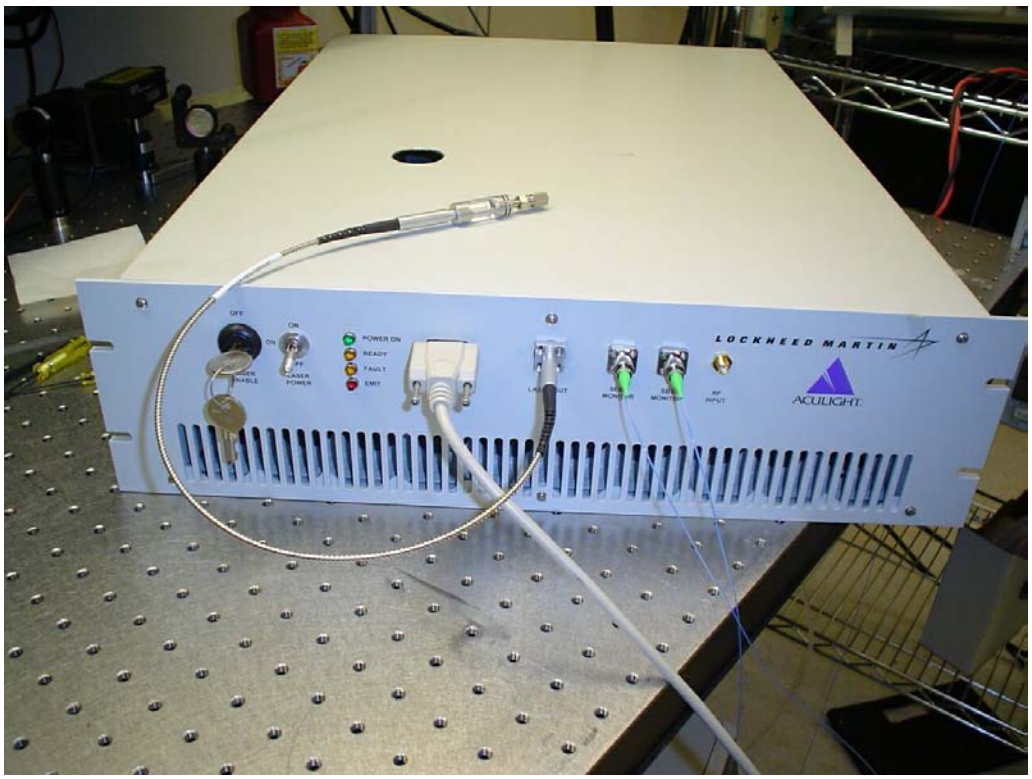

Aculight MOPA fiber laser. The Aculight laser is a rack mounted 1030 nm laser with fiber delivery to a free-space frequency-doubling unit that is mounted on the optical table. The unit is operated using the proprietary software it shipped with, whose use is described in the manual. The 532 nm output of the frequency-doubling unit will ultimately be transported to the electron gun for high-rep-rate operation of the ERL.

Cheetah-X laser. Is a mode-locked frequency doubled Nd:YVO_4 laser, The 532 nm, 81.25 MHz output will ultimately be transported to photocathode development experiments within building 912. No internal adjustments of the laser are required, and the turnkey operating procedure is described in the manual, including procedures for locking its emission with an external RF reference. It is normally housed in a light-safe housing (not shown) containing optics for delivering an extra monitor beam which may be coupled out of the housing with a fiber.

The Optilab HPPA-41 Fiber laser is a fiber laser MOPA using an electro-optically modulated CW DFB laser as a seed source (upper unit) and a multi-stage 1560 nm fiber amplifier. It is rack-mountable with a short delivery fiber that brings the light to an adjacent optical table.

Innolas Picolo AOT-1 0 – 5 kHz Q-switched Nd:YAG laser:

ERL Laser SOP Addendum:

Laser Operation within the ERL blockhouse enclosure

When laser light is to be directed into the ERL blockhouse enclosure, the entire area becomes a Laser Controlled Area. This is captured in the ERL Particle Accelerator Security System (PASS) in the "Laser Controlled Access Mode". A complete description of all PASS modes for the ERL may be found in the C-AD online operations procedure manual website (http://www.c-ad.bnl.gov/ESSHQ/SND/OPM/) In particular laser operators should familiarize themselves with the following manuals to be found there:

18.4.1 Operation of ERL (Electron Recovery Linac) PASS (Particle Accelerator Security System)
18.4.2.a ERL Experimental Area Sweep Checklist

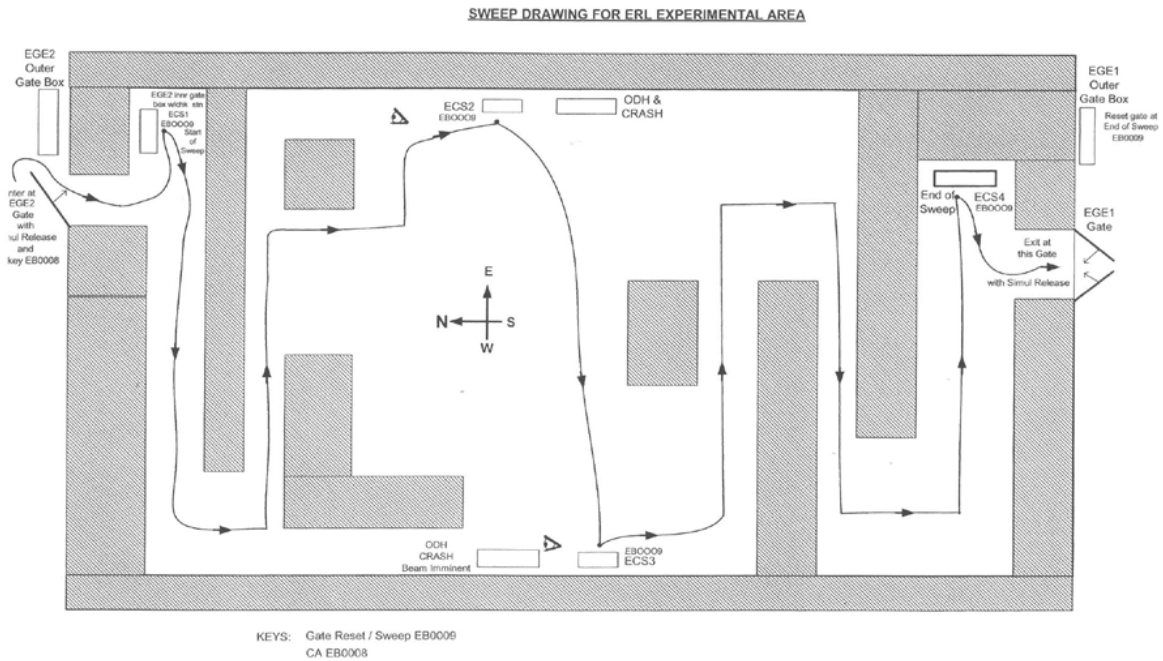

Figure 1. ERL blockhouse enclosure, top view. Shaded areas are radiation shield blocks. Arrows illustrate the search path for a safety sweep.

Figure 1 shows a diagram of the ERL blockhouse interior which illustrates the sweep path for securing the area. The laser enters through a penetration in the shield wall (shaded areas), near the block annotated 'ODH & CRASH' on the diagram. Both the laser room interlock and the ERL enclosure interlock are controlled by the same PASS system. Entry to both areas is controlled by the same RFID token. The only difference between the laser room and the ERL enclosure is in the action precipitated by a fault. While a fault condition in the laser room interrupts the beam with the primary shutter (Shutter #2 in the PASS documentation) in front of the Lumera 9.4 MHz laser and the interlock panel to which all other lasers are connected, a fault in the ERL enclosure interrupts the beam at a shutter located at the entrance of the penetration running from the laser room to the ERL enclosure (Shutter #3). A third shutter (Shutter #1), located just before Shutter #2, is the "reachback" which is activated in the event that Shutters 1 or 3 malfunction. A 'fault' includes the condition that the area has not been swept. In

this way, laser work can continue in the laser room regardless of the state of the ERL enclosure with no danger of laser light entering the ERL enclosure, and test and alignment work involving the laser can be done in the ERL enclosure in compliance with all laser safety procedures.

When in Laser Controlled Access Mode, the entire ERL enclosure is a laser controlled area, and all procedures and protocols in the SOP and Laser Safety Area of the Standards Based Management System (SBMS located at https://sbms.bnl.gov/sbmsearch/subjarea/113/113_SA.cfm?parentID=113) apply. Personal protective equipment is to be used within the ERL enclosure, just as in the laser room.

Figure 2 and 3 illustrate the laser path for the photocathode laser passing from the laser room into the ERL enclosure. In Fig. 2, the blue shaded areas represent optical breadboards. The first is mounted horizontally in the laser room; from it the beam is launched through the penetration, to vertically-mounted breadboards secured on the laser tower. Optics on the latter breadboards raise the laser to the electron beam height, and steer the beam to a cross, where it enters the accelerator vacuum enclosure. A mirror near the center of the cross steers the beam to the photocathode. The laser tower also includes optics for laser beam diagnostics. Note that the view in Fig. 2 is rotated 180 degrees from Fig. 1. Figure 3 shows a side view, with the laser room at the left side of the figure, and the electron beamline to the right, with the view looking along the beamline towards the photocathode. The optics and vacuum components configurations in Fig. 3 are illustrative only, and meant only to show the basic path; the actual configuration differs in details and has more components. The dimensions in figures 2 and 3 are approximate.

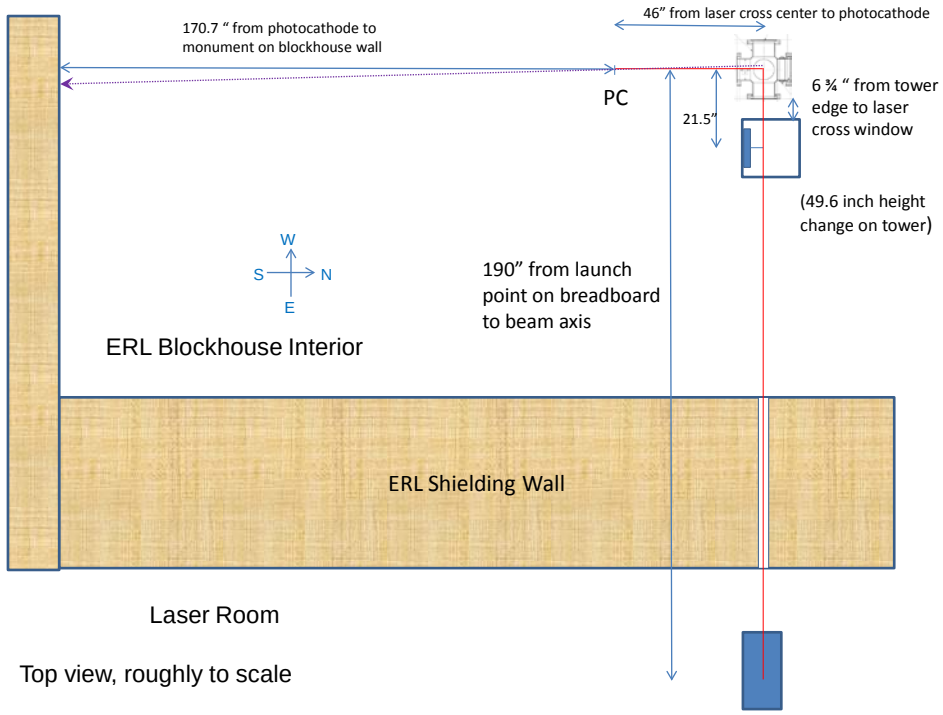

Figure 2. Sketch of laser path from laser room to photocathode. Path shown in red. PC marks the photocathode position

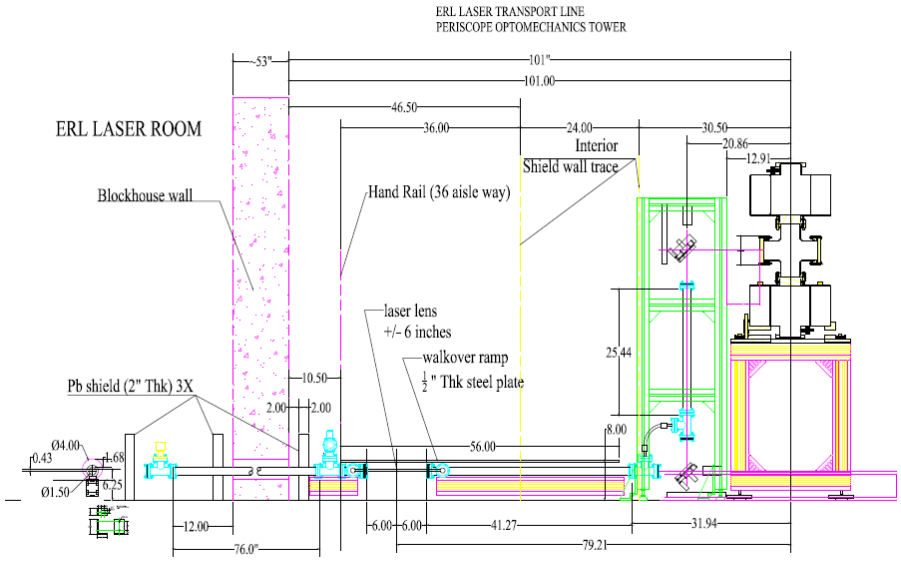

Figure 3. Side view looking in the electron beam direction towards the photocathode. Optics and laser transport vacuum components are illustrative only.

If you are using a printed copy of this procedure, and not the on-screen version, then you MUST make sure the dates at the bottom of the printed copy and the on-screen version match.
The on-screen version of the Collider-Accelerator Department Procedure is the Official Version.
Hard copies of all signed, official, C-A Operating Procedures are available by contacting the ESSHQ Procedures Coordinator, Bldg. 911A

18.2.1 ERL Operations Organization and Administration

Attachment

Hand Processed Changes

HPC No.	Date	Page Nos.	Initials
_____	_____	_____	_____
_____	_____	_____	_____
_____	_____	_____	_____

Approved: _____***Signature with Date on File***_____
Collider-Accelerator Department Chairman Date

L. Hammons

18.2.1 - ERL Operations Organization and Administration

1. Purpose

Responsibility for the safe and reliable beam operation of the ERL facility resides with the ERL Shift Leader. The ERL Shift Leader is the person in charge of the operating personnel and shall be responsible for day-to-day planning of machine operation, studies, development activities during running periods, and safe, efficient, and effective day-to-day operation of the facility. The ERL Shift Leader is the focus for all operations-related questions. The ERL Operations Specialist is responsible for managing day-to-day resources and materials for the ERL, providing guidance, oversight, and advice to the ERL Project Leader to ensure that the conditions for safe operation are maintained, that staff members are trained in the appropriate safety and administrative procedures for the facility, and that appropriate work planning is conducted. The ERL Project Leader shall be responsible for the overall project, ensuring that the scientific objectives are achieved and that the operational activities are performed safely and effectively, in accordance with the policies and procedures of the C-A Department. The ERL Project Leader shall oversee the work of the ERL Shift Leader and advise the Shift Leader on scheduling, administrative, safety, and scientific concerns. The ERL Project Leader and the ERL Operations Specialist, along with the ERL Shift Leader shall be responsible for machine operations scheduling to best support and further programmatic and safety goals for the ERL facility. Personnel responsible for day-to-day operation are members of the Accelerator Division, the Accelerator R & D Division, the Experimental Facilities and Support Division, and the Controls Division. Additional personnel who support the operations belong to the ES&H Services Division and the Facilities & Operations Directorate.

2. Responsibilities

2.1 Operations

2.1.1 The ERL Shift Leader

2.1.1.1 The ERL Shift Leader is responsible for the safe beam operation of the ERL facility and, along with the Head of the Accelerator R & D Division, the ERL Project Leader, the ERL Operations Specialist, and the Accelerator R & D Research Space Manager (RSM), is responsible for the schedule of the ERL facility. The roles and responsibilities of the shift leader include:

2.1.1.1.1 Planning and managing of day-to-day machine operations.

2.1.1.1.2 Planning and executing accelerator physics studies.

2.1.1.1.3 Executing accelerator development during running periods.

2.1.1.1.4 Safe operation of the facility in adherence with procedures, equipment specifications, and Accelerator Safety Envelope operating limits (OPM 2.5.6).

2.1.1.1.5 Serving as Local Emergency Coordinator during running periods.

2.1.1.1.6 Notification of MCR and CAS that ERL is in operation during running periods.

2.1.1.1.7 Reports to the ERL Project Leader.

2.1.2 The ERL Operations Specialist

2.1.2.1 The ERL Operations Specialist, along with the Head of the Accelerator R&D Division, the ERL Project Leader, the ERL Shift Leader, and the Accelerator R&D Research Space Manager, sets the schedule for operation of the ERL. During ERL running periods, the ERL Operations Specialist has the following roles and responsibilities:

2.1.2.1.1 Management of day-to-day resources and materials.

2.1.2.1.2 Longer-term operational planning and provisioning of resources.

2.1.2.1.3 Insuring that personnel are trained in procedures related to ERL operation and conducting training as necessary.

2.1.2.1.4 Work planning as required.

2.1.2.1.5 Assisting in coordination of maintenance and experimental activities with the RSM and the C-AD Maintenance Support Group.

2.1.2.1.6 Oversight and review of shift activities to insure that all appropriate procedures are observed and work planning is conducted in adherence with procedures, equipment specifications, and Accelerator Safety Envelope operating limits (OPM 2.5.6).

2.1.2.1.7 Advise the ERL Project Leader on matters of procedure and safety performance for the project to ensure that the conditions for safe operation are maintained.

2.1.2.1.8 Informing CAS and MCR of any special conditions and special hazards associated with ERL operation.

2.1.2.1.9 In this role, advises the ERL Project Leader.

2.1.3 The ERL Project Leader

2.1.3.1 The ERL Project Leader is the overall head of the ERL Project. The ERL Project Leader is responsible for achieving the scientific objectives of the project and, along with the Head of the Accelerator R&D Division, the ERL Operations Specialist, the ERL Shift Leader, and the Accelerator R&D Research Space Manager, sets the schedule for operation of the ERL. In addition, the ERL Project Leader has the following responsibilities:

2.1.3.1.1 Oversee the activities of the working groups and the ERL Shift Leader to ensure that operational activities are performed safely and effectively, in accordance with C-A policies and procedures.

2.1.3.1.2 Ensure that the conditions for safe operation of the ERL are maintained.

2.1.3.1.3 Advise the ERL Shift Leader on administrative, safety, and scientific concerns to ensure that scientific objectives are achieved.

2.2 The personnel normally available (see OPM 2.5.6 for minimum requirements) to the shift leader during operations include:

2.2.1 A superconducting RF system specialist responsible for operation of the SRF system.

2.2.2 A laser system specialist responsible for operation of the laser system.

2.2.3 An instrumentation specialist responsible for operation of the instrumentation systems.

2.2.4 Cryogenic systems technicians who are responsible for operation of the ERL cryogenic system.

2.2.5 A radiological control technician, who is responsible for pulsed and residual radiation measurements.

2.2.6 A control room technician who shall serve to assist the shift leader in operation of the accelerator and monitoring of subsystems and alarms. The control room technician shall also be trained to assist with application of Lockout/Tagout as necessary.

2.3 Personnel outlined in section 2.1 and 2.2 are shown on Attachment 8.1, "Shift Organization Chart".

2.4 In addition to the operation practices outlined in C-A-OPM Chapter 2, operating personnel have the following safety responsibilities:

2.4.1 Safely operate the facility with adherence to procedures, equipment specifications, and Accelerator Safety Envelope limits (OPM 2.5.6).

2.4.2 Comply with the requirements of the Laboratory Standards Based Management System (SBMS).

2.4.3 Follow good radiological protection practices and procedures to maintain personnel radiation exposures as low as reasonably achievable, and to reduce the generation of activated materials.

2.5 Supervisors of the personnel listed in Section 2.2 shall periodically review radiation exposure trends of operating personnel.

2.6 Additional Personnel

2.6.1 Additional personnel available to the ERL Shift Leader include the Accelerator Physicists and Equipment Systems Specialists. Those persons repair equipment necessary for operations or provide trouble-shooting expertise when machine physics or equipment problems arise.

2.6.2 Access to the controls of the ERL facilities shall only be granted to those system specialists and accelerator physicists that are trained and knowledgeable of such controls and who are familiar with the safety procedures and protocols established at the ERL facility. All individuals operating the controls of the ERL facility must:

2.6.2.1 Recognize the role of the on-duty ERL Shift Leader as the decision-maker regarding the safe and reliable operation of the ERL facility.

2.6.2.2 Follow the orders of the ERL Shift Leader or designee during an emergency situation.

2.6.2.3 Not operate any of the PASS controls for the ERL unless specifically authorized to do so by the Access Controls Group Leader.

2.6.2.4 Only personnel specifically authorized by the Head of Accelerator R & D may perform sweeps of the ERL.

2.6.2.5 Request permission to use the accelerator controls and state the purpose for the use of the controls to the on-duty ERL Shift Leader.

2.7 Additional Operating Responsibilities -- Monitoring of Accelerator Performance

2.7.1 Regular meetings are held between the supervisors and group members of the various operating groups to discuss operational problems and possible corrective actions, safety, and other matters of concern. When appropriate, the business discussed at these meetings should be documented.

2.7.2 When appropriate, operations goals should be established by the Accelerator R & D Head along with operating group leaders in the following areas and should reflect BNL's "critical outcomes":

2.7.2.1 Minimize the unavailability of safety systems.

2.7.2.2 Minimize personnel errors.

2.7.2.3 Minimize particle losses as low as reasonable achievable (ALARA).

2.7.2.4 Minimize lost facility capability.

2.7.2.5 Minimize the number of unscheduled shutdowns.

2.7.2.6 Maintain complete staffing and training.

2.7.2.7 Minimize hazardous and radioactive waste.

2.7.2.8 Minimize the number alarms/annunciations.

2.7.3 Once specific goals are set they should be audited by the Accelerator R & D or a designee throughout the running period.

3. Prerequisites

None

4. Precautions

None

5. Procedure

None

6. Documentation

None

7. References

7.1 C-A-OPM "Chapter 2"

7.2 C-A-OPM 2.5.6, "Accelerator Safety Envelope Credited Controls and Supports for ERL"

8. Attachments

8.1 "Shift Operations Organization Chart"

8.2 "ERL Organization Chart"

Attachment 8.1

Shift Operations Organization Chart

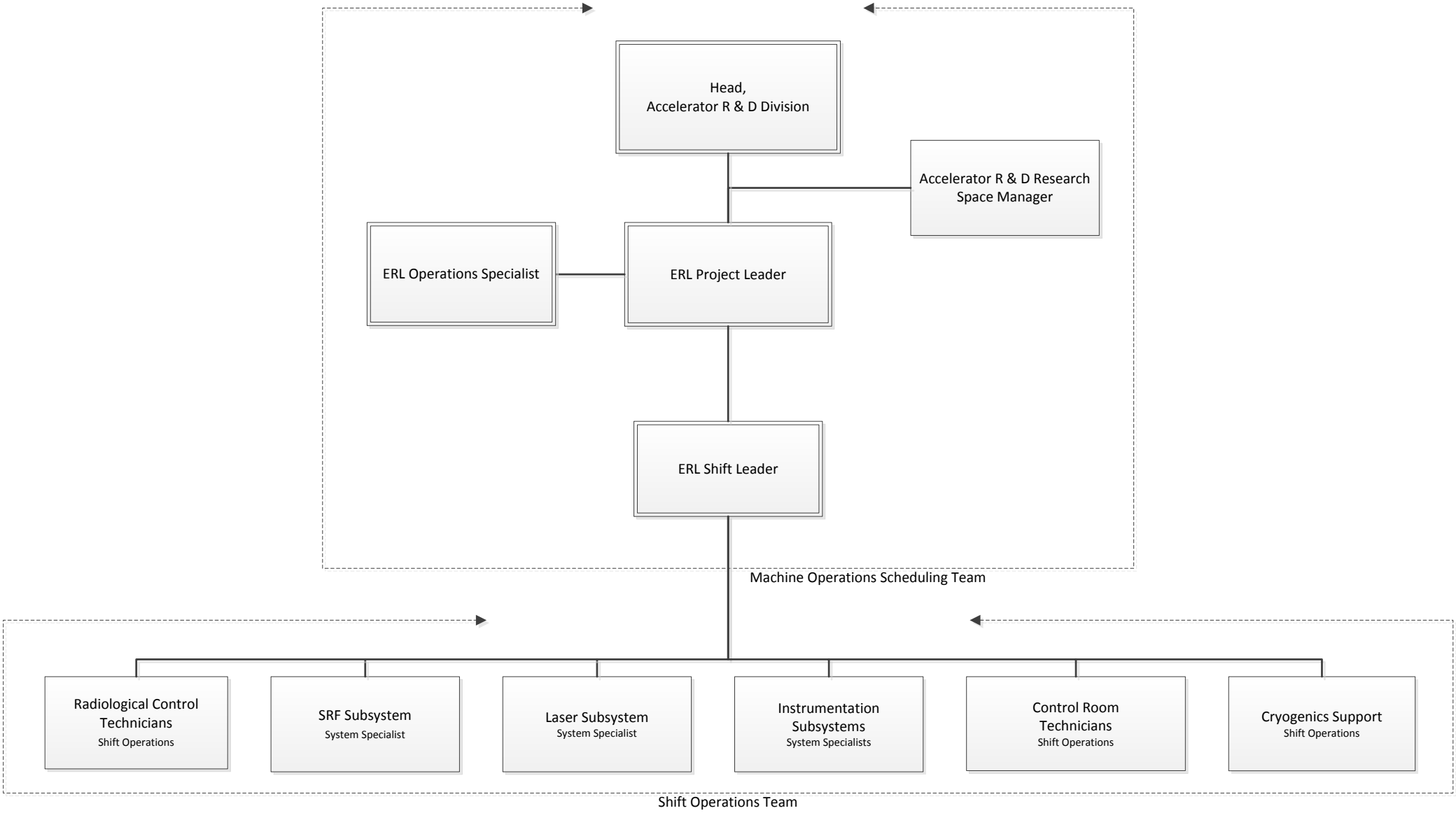

Attachment 8.2

ERL Organization Chart

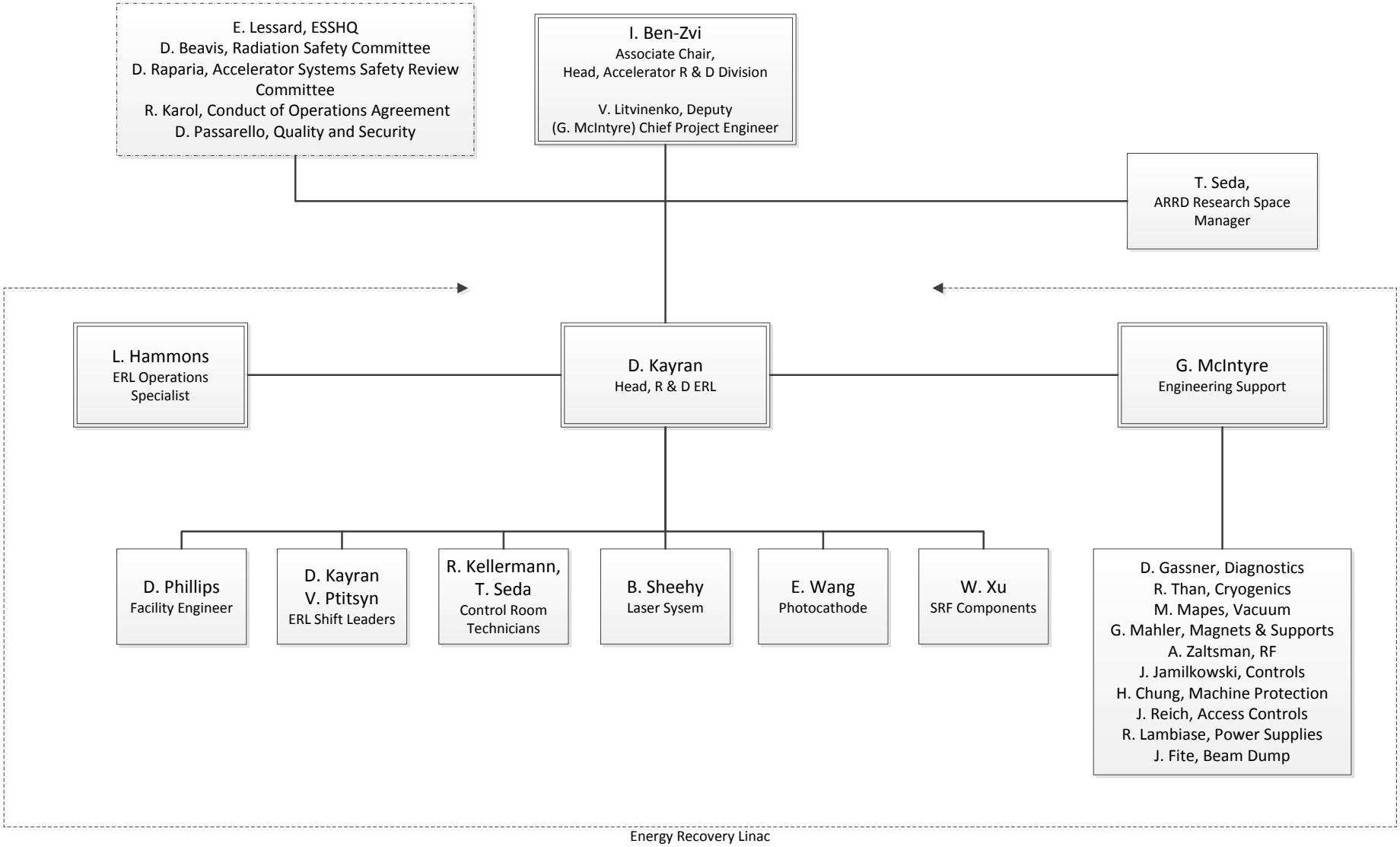

If you are using a printed copy of this procedure, and not the on-screen version, then you MUST make sure the dates at the bottom of the printed copy and the on-screen version match.
The on-screen version of the Collider-Accelerator Department Procedure is the Official Version.
Hard copies of all signed, official, C-A Operating Procedures are available by contacting the ESSHQ Procedures Coordinator, Bldg. 911A

C-A OPERATIONS PROCEDURES MANUAL

18.2.2 ERL Operating Practices

Text Pages 2 through 5

Attachment

Hand Processed Changes

HPC No.	Date	Page Nos.	Initials
_____	_____	_____	_____
_____	_____	_____	_____
_____	_____	_____	_____

Approved: _____***Signature / Date on File***_____
Collider-Accelerator Department Chairman Date

L. Hammons

18.2.2 – ERL Operating Practices

1. Purpose

This procedure describes the operating practices for the ERL and is derived from the guidelines established in OPM 2.2, "Operating Practices". In the ERL, effective monitoring of accelerator equipment is necessary to detect abnormal conditions or adverse trends, allowing appropriate action to be taken before equipment malfunction occurs. Notification of shift supervisors and other operating personnel promptly is necessary to ensure that proper attention is given to changing or unusual conditions. The status of the facility and equipment, along with changes to the status shall be understood by all operations personnel so that activities can be controlled and coordinated, and all operators of the ERL facility shall follow all the established rules for safety and quality assurance. A desire to conduct assigned tasks expediently should not interfere with safety and quality assurance rules.

2. Guidelines

2.1 Authority to Operate Equipment

The ERL shift leader is in charge of all activities related to operation of the ERL. Any work by support groups during ERL operation which might impact the operation or status of the accelerator and its associated subsystems shall be approved by the ERL shift leader.

2.2 Operating Practice

Operations personnel shall operate the components which make up the ERL with adherence to the procedures and equipment specifications for each piece of equipment. Operators shall operate equipment within operating limits and operation safety requirements of each device.

2.3 Safety Practices

2.3.1 ERL operations personnel shall comply with BNL requirements and C-A OPM policies and procedures. The latest versions of OPM procedures are available via the C-A OPM web site. The on-screen version of the C-A OPM is the official version. If a printed copy of the procedure is required, the procedure may be printed from the web site and must be discarded after use to insure that only the latest version of the procedure is in use. A controlled copy of C-A procedures in hard-copy form is also available in the C-A Main Control Room (MCR).

2.3.2 Operations personnel shall be trained in safety procedures on a periodic basis.

2.3.3 The safety envelope of the ERL facility is contained in OPM 2.5.6, "Accelerator Safety Envelope Credited Controls and Supports for ERL". If any Authorized Alternatives are associated with a requirement of OPM 2.5.6, these shall be noted in the ERL experimental logbook and the time of the start/stop of the Authorized Alternative noted. The ERL shift leader is responsible to assure that the Authorized Alternative is used no longer than the interval allowed by OPM 2.5.6. The ESSHQ Associate Chair or Division Head shall be notified as soon as possible when an Authorized Alternative is implemented.

2.4 Radiological Protection

All operating personnel shall abide by the radiation safety provisions of the BNL RAD CON Manual. A copy of this manual is maintained by the C-A Associate Chair for ESSHQ and is available on the web. Day-to-day rules to be followed have been incorporated into the C-A OPM.

2.5 Radiological Exposure

Supervisors are required to examine exposure histories of their personnel and restrict the duties of those having exposures above the C-A Administrative Levels.

The C-A Department goal is to keep individual and collective doses as low as reasonable achievable. In order to meet this goal, the Administrative Levels are indicated in ¶ 2.5.1 of OPM 2.2.

2.6 Operator Inspection Tours

Inspection tours for the ERL facility are primarily conducted by the ERL cryogenic technicians. Operator tours should be of sufficient detail to ensure the status of equipment is known. The activities that should be conducted during the inspection tour are outlined in ¶ 2.6 of OPM 2.2.

2.7 Response to Indications

Operators shall believe instrument readings and treat them as accurate unless proven otherwise. Ignoring an unusual reading because the operator believes an instrument is faulty can cause abnormal conditions to be undetected. In general, ERL operations staff shall check other indications, if possible, when unexpected readings are observed. Prompt action shall be taken to investigate the cause of abnormal or unexpected indications, so that prompt corrective action can occur. When malfunctioning or inaccurate instruments are discovered, they shall be appropriately identified to prevent subsequent confusion, and responsible personnel shall be notified to effect repairs**. All ERL operators are instructed to follow Safety and Health requirements, achieve facility safety, personnel**

safety, pollution prevention requirements, and environmental protection requirements above facility production.

2.8 Resetting Protective Devices

When protective devices trip (e.g., chipmunk interlock), an attempt shall be made to understand the cause of the trip before the device is reset. Normally, before action is taken, an ERL operator shall ensure no abnormal condition exists that would preclude reset. The ERL shift leader shall ensure that all tripped protective devices are properly addressed.

3. Responsibilities

It is the responsibility of the on-shift operating crew to safely operate the accelerator through adherence to written procedures and sound operating practices. The authority for the ERL operation is vested in the on-duty ERL shift leader and transferred through a formal turnover process to a qualified ERL shift leader. If a special test is required or an abnormal condition arises, accelerator personnel shall be aware that the responsibility to determine corresponding operation conditions, system alignments, or equipment manipulations, rests fully with the on-duty ERL shift leader. The shift leader shall not permit any individual to bypass or overrule their operational judgment. If this occurs, the ERL shift leader shall bring the matter to the attention of higher line authority for the operation of the ERL. Furthermore, the ERL shift leader shall ensure that operators and appropriate operations staff are made aware of the status of the facility and equipment, change in status of the facility and equipment, system alignments, and operating conditions during ERL operating periods.

4. References

4.1 C-A-OPM 2.2, "Operating Practices".

If you are using a printed copy of this procedure, and not the on-screen version, then you MUST make sure the dates at the bottom of the printed copy and the on-screen version match.
The on-screen version of the Collider-Accelerator Department Procedure is the Official Version.
Hard copies of all signed, official, C-A Operating Procedures are available by contacting the ESSHQ Procedures Coordinator, Bldg. 911A

C-A OPERATIONS PROCEDURES MANUAL

18.2.3 SRF VTF and SVTF Operations Organization and Administration

Text Pages 2 through 7

Attachment

Hand Processed Changes

HPC No.	Date	Page Nos.	Initials
_____	_____	_____	_____
_____	_____	_____	_____
_____	_____	_____	_____

Approved: _____***Signature/ Date on File***_____
Collider-Accelerator Department Chairman Date

S. Belomestnykh

18.2.3 – SRF VTF and SVTF Operations Organization and Administration

1. Purpose

Responsibility for the safe and reliable operation of the Superconducting Radio Frequency (SRF) Large Vertical Test Facility (VTF) and Small Vertical Test Facility (SVTF) facility resides with the VTF/SVTF Operations Coordinator and the Liaison Physicist. The VTF/SVTF Liaison Physicist is responsible for day-to-day planning of VTF/SVTF test operation, studies, development activities during test periods, and safe, efficient, and effective day-to-day operation of the facility. The VTF/SVTF Liaison Physicist is the focus for all operations-related questions. The VTF/SVTF Operations Coordinator is responsible for managing day-to-day resources and materials for the facility, insuring that the conditions for safe operation are maintained, that staff members are trained in the appropriate safety and administrative procedures for the facility, and that appropriate work planning is conducted. Both the Liaison Physicist and the Operations Coordinator shall be responsible for test scheduling to best support and further programmatic and safety goals for the VTF/SVTF facility. Personnel responsible for day-to-day operation are members of the Accelerator Division, the Accelerator R&D Division, the Experimental Support and Facilities Division, the ESSHQ Division and the Control Systems Group. Additional personnel who support the operations belong to the ES&H Services Directorate and the Facilities & Operations Directorate.

2. Responsibilities

2.1 Operations

2.1.1 The VTF/SVTF Liaison Physicist

2.1.1.1 The VTF/SVTF Liaison Physicist, along with the Head of the Accelerator R&D Division, the VTF/SVTF Operations Coordinator, and the Accelerator R&D Research Space Manager (RSM), is responsible for the schedule of the VTF/SVTF facility. The roles and responsibilities of the Liaison Physicist include:

- 2.1.1.1.1 Planning and managing of day-to-day test operations.
- 2.1.1.1.2 Planning and executing SRF studies.
- 2.1.1.1.3 Executing facility development during test periods.
- 2.1.1.1.4 Safe operation of the facility in adherence with procedures, equipment specifications, and safe operating operating limits per C-A-OPM 18.10.2.
- 2.1.1.1.5 Serving as Local Emergency Coordinator during test periods.
- 2.1.1.1.5 Notification of MCR and CAS that VTF/SVTF is in operation during test periods.
- 2.1.1.1.6 Reports to the Head of Accelerator R & D.

2.1.2 The VTF/SVTF Operations Coordinator

2.1.2.1 The VTF/SVTF Operations Coordinator, along with the Head of the Accelerator R&D Division, the VTF/SVTF Liaison Physicist, and the Accelerator R&D Research Space Manager, sets the schedule for operation of the VTF and SVTF. During the test periods, the VTF/SVTF Operations Coordinator has the following roles and responsibilities:

2.1.2.1.1 Day-to-day coordination of operational activities.

2.1.2.1.2 Longer-term operational planning and provisioning of resources.

2.1.2.1.3 Insuring that personnel are trained in procedures related to VTF/SVTF operation and conducting training as necessary.

2.1.2.1.4 Work planning as required.

2.1.2.1.5 Coordination of maintenance and experimental activities with the RSM and the C-AD Maintenance Support Group.

2.1.2.1.6 Oversight and review of test activities to insure that all appropriate procedures are observed and work planning is conducted in adherence with procedures, equipment specifications, and safe operating limits per C-A-OPM 18.10.3.

2.1.2.1.7 Informing CAS and MCR of any special conditions and special hazards associated with VTF/SVTF operation.

2.1.2.1.8 Notify the rigging supervisor about VTF operations and apply appropriate work planning to ensure that the crane cab does not get too close to the top of VTF as per requirements set by the RSC.

2.1.2.1.9 In this role, reports to the Head of Accelerator R&D.

2.2 The personnel normally available to the Liaison Physicist during operations include:

2.2.1 A superconducting RF system specialist (SRF test leader) responsible for operation of the facility for a particular SRF test.

2.2.2 One or more SRF test team member responsible for helping the SRF test leader to perform the test.

2.2.3 Cryogenic systems technicians who are responsible for operation of the ERL & VTF cryogenic system.

2.2.4 A radiological control technician, who is responsible for radiation measurements.

2.2.5 A VTF/SVTF technician who shall serve to assist the SRF test leader in operation of the facility and monitoring of subsystems and alarms. The VTF/SVTF technician shall also be trained to assist with application of Lockout/Tagout as necessary.

2.3 Personnel outlined in Sections 2.1 and 2.2 are shown in Attachment 8.1, "VTF/SVTF Organization Chart".

2.4 In addition to the operation practices outlined in C-A-OPM Chapter 2, operating personnel have the following safety responsibilities:

2.4.1 Safely operate the facility with adherence to procedures, equipment specifications, and safe operating limits per C-A-OPM 18.10.3.

2.4.2 Comply with the requirements of the Laboratory Standards Based Management System (SBMS).

2.4.3 Follow good radiological protection practices and procedures to maintain personnel radiation exposures as low as reasonably achievable, and to reduce the generation of activated materials.

2.5 Supervisors of the personnel listed in Section 2.2 shall periodically review radiation exposure trends of operating personnel.

2.6 Additional Personnel

2.6.1 Additional personnel available to the Operations Coordinator include the Equipment Systems Specialists. Those persons repair equipment necessary for operations or provide trouble-shooting expertise when SRF test or equipment problems arise.

2.6.2 Access to the controls of the VTF/SVTF facilities shall only be granted to those system specialists that are trained and knowledgeable of such controls and who are familiar with the safety procedures and protocols established at the VTF/SVTF facility. All individuals operating the controls of the VTF/SVTF facility must:

2.6.2.1 Recognize the role of the Liaison Physicist and on-duty SRF test leader as the decision-makers regarding the safe and reliable operation of the VTF/SVTF facility.

2.6.2.2 Follow the orders of the Liaison Physicist or the SRF test leader or designee during an emergency situation.

2.6.2.3 Not operate any of the PASS controls for the VTF/SVTF unless specifically authorized to do so by the Access Controls Group Leader.

2.6.2.4 Only personnel specifically authorized by the Head of Accelerator R&D may perform sweeps of the VTF and SVTF.

2.6.2.5 Request permission to use the VTF/SVTF controls and state the purpose for the use of the controls to the on-duty SRF test leader.

2.7 Additional Operating Responsibilities – Monitoring of VTF/SVTF Performance

2.7.1 Regular meetings are held between the supervisors and group members of the various operating groups to discuss operational problems and possible corrective actions, safety, and other matters of concern. When appropriate, the business discussed at these meetings should be documented.

2.7.2 When appropriate, operations goals should be established by the Accelerator R&D Head along with operating group leaders in the following areas and should reflect BNL's "critical outcomes":
2.7.2.1 Minimize the unavailability of safety systems.
2.7.2.2 Minimize personnel errors.
2.7.2.3 Minimize particle losses as low as reasonable achievable (ALARA).
2.7.2.4 Minimize lost facility capability.
2.7.2.5 Minimize the number of unscheduled shutdowns.
2.7.2.6 Maintain complete staffing and training.
2.7.2.7 Minimize hazardous and radioactive waste.
2.7.2.8 Minimize the number alarms/annunciations.

2.7.3 Once specific goals are set they should be audited by the Accelerator R&D or a designee throughout the test period.

3. Prerequisites

None

4. Precautions

None

5. Procedure

None

6. Documentation

None

7. References

7.1 C-A-OPM "Chapter 2"
7.2 C-A-OPM 18.10.2 "VTF and SVTF Safe Operating Limits"

8. Attachments

9.1 VTF/SVTF Operations Organization Chart
9.2 VTF/SVTF Personnel

Attachment 8.1 **<u>VTF/SVTF Operations Organization Chart</u>**

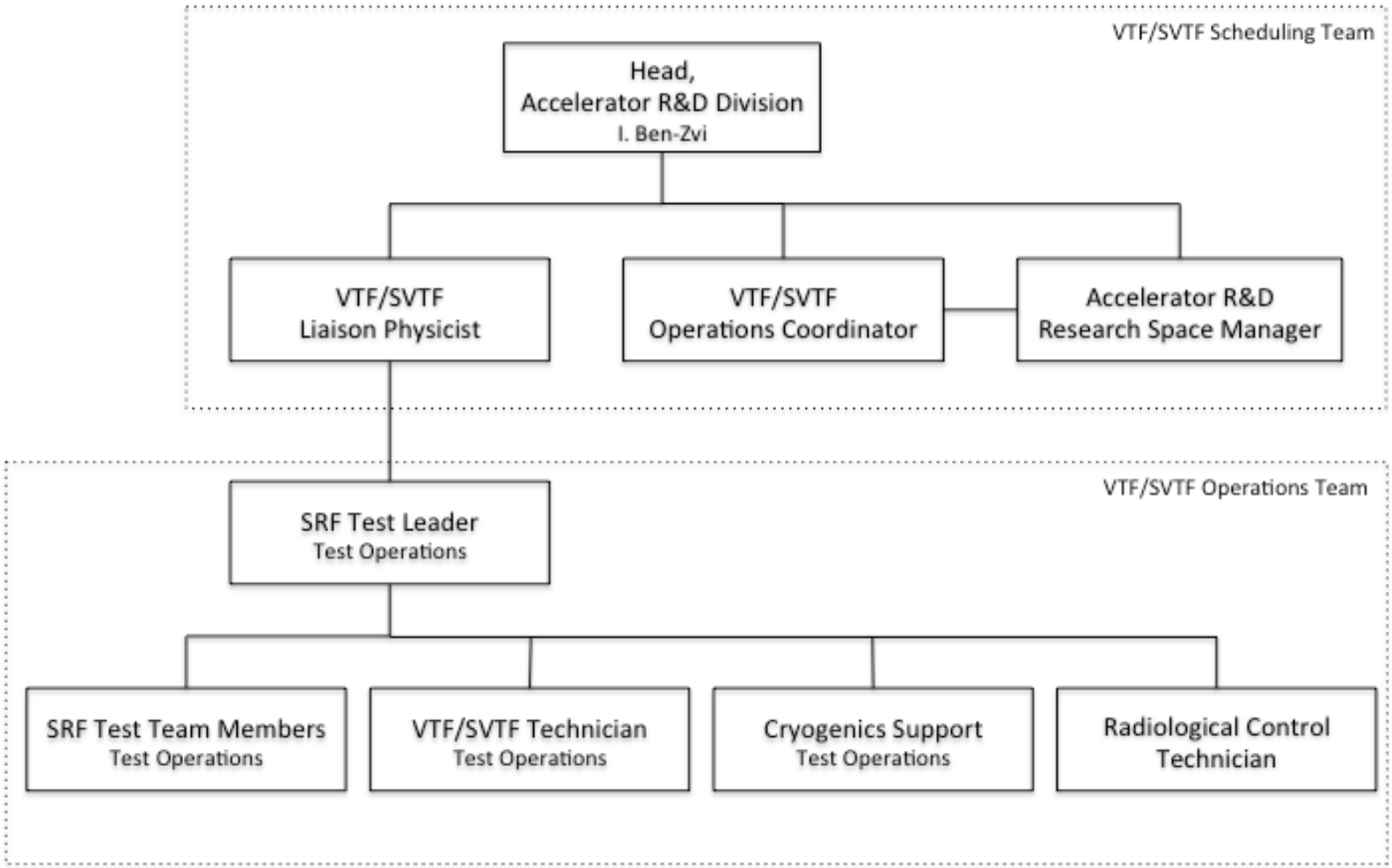

Attachment 8.2 **VTF/SVTF Personnel (as of 4/15/2013)**

8.2.1 Key Personnel

Accelerator R&D Division Head – I. Ben-Zvi
VTF/SVTF Liaison Physicist – S. Belomestnykh
VTF/SVTF Operations Coordinator – L. Hammons
VTF Project Engineer – R. Porqueddu
VTF/SVTF Liaison Engineer – S. Pontieri
Accelerator R&D Research Space Manager – T. Seda
SRF test leaders – L. Hammons, Q. Wu, Wencan Xu
VTF/SVTF Technicians – T. Seda, R. Kellermann

8.2.2 Personnel authorized to sweep SVTF:
D. Pate, T. Seda, L. Hammons, Wencan Xu, S. Belomestnykh, J. Kewisch, J. Reich, C. Schultheiss, Q. Wu

8.2.3 Personnel authorized to close the roof and sweep VTF:
D. Pate, T. Seda, Q. Wu, S. Belomestnykh, Wencan Xu

8.2.4 Designated Experimental Personnel for SRF vertical tests:
D. Pate, T. Seda, Wencan Xu, L. Hammons, Q. Wu, S. Belomestnykh, J. Kewisch, C. Schultheiss

If you are using a printed copy of this procedure, and not the on-screen version, then you MUST make sure the dates at the bottom of the printed copy and the on-screen version match.
The on-screen version of the Collider-Accelerator Department Procedure is the Official Version.
Hard copies of all signed, official, C-A Operating Procedures are available by contacting the ESSHQ Procedures Coordinator, Bldg. 911A

C-A OPERATIONS PROCEDURES MANUAL

18.3.1 Emergency Procedure for the R&D Energy Recovery Linac (ERL)

Text Pages 2 through 4

Hand Processed Changes

HPC No.	Date	Page Nos.	Initials

Approved: _____***Signature on File***_____ _____
Collider-Accelerator Department Chairman Date

I. Ben-Zvi / S. Belomestnykh

18.3.1 Emergency Procedure for the R&D Energy Recovery Linac (ERL)

1. Purpose

The purpose of this document is to define the Local Emergency Plan (LEP) for the operation of the R&D Energy Recovery Linac (ERL). The R&D ERL operation is part of the Collider-Accelerator Department, thus covered by C-A-OPM 3.0 "Local Emergency Plan for the Collider-Accelerator Department".

This local emergency plan is intended to provide procedures specific to the local conditions at the R&D ERL, and assure compliance with the Local Emergency Plan for the Collider-Accelerator Department, and also the following:

- The safety of personnel.
- Prompt notification of appropriate personnel.
- Maintenance of appropriate emergency status.
- Protection of the environment.
- Preservation of BNL facilities and equipment.

2. Responsibilities

2.1 Local Emergency Coordinator (LEC) – During the testing, commissioning, and operation of the R&D ERL, the Local Emergency Coordinator (LEC) will be the Liaison Physicist or a Shift Leader. The alternate LEC is the Collider-Accelerator Support (CAS) Watch. The responsibilities of the LEC are described in C-A-OPM 3.2.

2.2 The LEC, or designee, or the ERL Research Space Manager, shall be responsible for:

2.2.1 Acting as a First Responder to incidents, and responding to the Command Post.

2.2.2 Maintaining the R&D ERL facility in a safe condition.

2.2.3 Ensuring that personnel involved in the R&D ERL operations are familiar with emergency and safety procedures.

2.2.4 Ensuring that all postings of special instructions are complete.

2.2.5 Implementing all emergency responses outlined in the Procedures section of this document, or any additional instructions given by the Department Emergency Coordinator (DEC), C-A LEC, or Incident Commander.

2.2.6 Assist in assuring that the persons performing safety checks are familiar with the appropriate procedure and the C-A Local Emergency Plan.

3. Prerequisites

The R&D ERL LEC shall have knowledge in the following:

3.1 C-A Local Emergency Plan, C-A-OPM 3.0, including familiarity with SBMS Emergency Preparedness.

3.2 All relevant equipment involved in the R&D ERL being used to ensure safe operations.

3.3 Knowledge of the physical layout of the 912 NEBA ERL complex (routes of egress, location of emergency equipment, telephones, controls, etc.).

3.4 Knowledge of the Building Assembly Area and outside assembly area.

4. Precautions

4.1 The safety of personnel and the environment is of primary importance. In an emergency, all personnel shall take great care not to give instructions or information which may place personnel or the environment at risk or harm.

5. Procedures

5.1 In the event that a fire alarm goes off in the 912 complex, all non-emergency personnel shall evacuate to the assembly point and await the arrival of the Fire/Rescue Group.

5.1.1 If it is not immediately clear there is an actual fire:

5.1.1.1 the LEC, or designee, shall investigate the NEBA area for confirmation,

5.1.1.2 the LEC, or designee, shall inspect the 912 complex Fire Panel to assess where the alarm is originating from.

5.2 In the event of activation of any B912 Accelerator R&D Area low oxygen monitor alarm, all personnel shall evacuate the area immediately, including all enclosures per C-A-OPM 18.3.2 "Response to Low Oxygen Alarm in Building 912 Accelerator R&D Complex".

6. Documentation

None

7. References

7.1 C-A-OPM 3.0, Local Emergency Plan

7.2 C-A-OPM 3.2 “Emergency Procedures to be Implemented by the Local Emergency Coordinator”.

7.3 SBMS Emergency Preparedness

7.4 C-A-OPM 18.3.2 "Response to Low Oxygen Alarm in Building 912 Accelerator R&D Complex"

8. Attachments

None

If you are using a printed copy of this procedure, and not the on-screen version, then you MUST make sure the dates at the bottom of the printed copy and the on-screen version match.
The on-screen version of the Collider-Accelerator Department Procedure is the Official Version.
Hard copies of all signed, official, C-A Operating Procedures are available by contacting the ESSHQ Procedures Coordinator, Bldg. 911A

C-A OPERATIONS PROCEDURES MANUAL

18.3.2 Response to Low Oxygen Alarm in Building 912 Accelerator R&D Area

Hand Processed Changes

HPC No.	Date	Page Nos.	Initials

Approved: ***Signature With Date on File***
Collider-Accelerator Department Chairman Date

R. Karol

18.3.2 Response to Low Oxygen Alarm in Building 912 Accelerator R&D Area

1. Purpose

To specify the initial response to a low oxygen alarm at Accelerator R&D Area Facilities, which includes B912, EEBA, NEBA, SVTF, LVTF, ERL accelerator enclosure, and the ERL compressor/vacuum pump/water building. Also discussed are safe entry procedures into ODH Class 0 areas following an ODH alarm in these areas/facilities.

The following ODH areas are covered by this procedure:

ODH Area	ODH Class	Main Hazard
B912 EEBA	0 when LN line charged	Nitrogen
B912 NEBA	0 when LN line charged	Nitrogen
ERL Accelerator Enclosure*	0 when cryogens present	Nitrogen, Helium
ERL Compressor/Vacuum Pump/Water Building*	0 when cryogen gas present	Helium
LVTF Enclosure*	0 when cryogens present	Nitrogen, Helium
SVTF Enclosure	0 when cryogens in enclosure	Nitrogen, Helium

*These areas have 2 ODH detector divisions, the others have only one division.

Note that the Shop Area in B912 EEBAA is not a posted ODH area, since the shop walls are barriers to inert gas intrusion.

2. Responsibilities

2.1. The responsibilities for the installation and maintenance of the Oxygen Monitor and Interface Systems at B912 Accelerator R&D Area are as follows:

a) Access Controls Group – ODH monitors, interlocks and alarms
b) Cryogenic Systems Section – 11,000 gallon LN tank isolation valve outside B912

2.2. The Main Control Room Operations Coordinator, or the CAS Watch, or ERL Research Space Manager, is responsible for supervising the execution of this procedure.

2.3 The Cryogenic Section Shift Supervisor, or the local ERL Cryogenic Watch, is responsible for supervising the execution of this procedure at the Cryogenic Complex at the B912 Accelerator R&D Facilities.

3. Prerequisites

3.1 Following an ODH alarm, building entrants shall carry a personal oxygen monitor (POM), and a Self-Rescue Supplied Atmosphere Respirator (SRSAR), when entering the B912 Accelerator R&D Area after the BNL Fire/Rescue Group has verified that oxygen concentration is >19.5%, and until it is confirmed that there is no cryogen leak. The Cryogenic Section, or C-AD Training Office, provides POMs and SRSARs for the B912 Accelerator R&D Area.

3.2 Personnel shall test the operation of their Personal Oxygen Monitor (POM) and verify the readiness of their Self-Rescue Supplied Atmosphere Respirators (SRSARs) before entry.

3.3 The POM shall be calibrated using fresh air and tested using exhaled air for alarm function. It shall be used to test the air at head level ahead of the personnel entering.

3.4 Anyone required to use a POM and SRSAR shall be ODH Class 1 qualified by completing TQ-ODH1, Oxygen Deficiency Hazard - Class 1, AD-ODH-1-TRG, Oxygen Deficiency Hazard - 1 Practical and have current medical surveillance for ODH-1.

3.5 While work is underway and an abnormal condition arises, stop the work, leave the area, and re-review the job against criteria in applicable SBMS Subject Areas, and/or work planning requirements. If unsure of further actions, discuss situation with supervisor.

4. Precautions

4.1 An oxygen-deficient condition shall be assumed to exist if any area, or enclosure fixed oxygen monitor, or any POM, alarms.

4.2 At the B912 Accelerator R&D Area the hazardous oxygen-displacing gas is nitrogen and/or helium. Helium is lighter than ambient air at > 40K. The helium will rise as it warms.

4.3 Great care and diligence must be exercised in the use of this procedure for reentry to prevent endangering personnel.

5. Procedure

Cautions:

1. If any building entrant POM indicates < 19.5% oxygen, immediately evacuate the area to an outdoor location. You may not remain in an oxygen deficient atmosphere which is defined by OSHA to be <19.5% oxygen.
2. DO NOT enter any enclosure (i.e., ERL, SVTF or LVTF, etc.), in the Accelerator R&D Area of B912, if there is any ODH alarm at any location of this area, until the alarm condition is investigated and cleared.

5.1 Alarm Response

Caution:

If it will take longer than one minute to assist, or if someone is unaccounted for, evacuate the alarming area or enclosure immediately.

Notes:

1. ODH fans will run for at least 90 seconds following an ODH alarm in the area covered by the fans even if the alarm resets during the 90-second interval.
2. If the ODH alarm clears, the fans will automatically stop 90 seconds after they are started.
3. Attachment 8.2 to this procedure describes the Human Machine Interface (HMI) panel and the ODH system for B912 Accelerator R&D Area.

5.1.1 Upon activation of any B912 Accelerator R&D Area low oxygen monitor alarm, all personnel shall evacuate the area immediately, including all enclosures. Check the area to see if anyone is trapped as you leave. If immediate help cannot be rendered, evacuate and call 2222 or 911 or activate a fire alarm for immediate assistance.

5.1.1.1 The B912 EEBAA Shop should be informed by ERL staff, or the ERL Cryogenics Watch, to leave the shop area as a precautionary action.

5.1.2 After evacuating, call the MCR (4662) to explain the status of the emergency. Ensure that the Cryogenic Group Shift Supervisor in the MCR is also informed (alternate location is the Cryogenic Control Room in B1005S, x3837 or x5308), and the Cryo Watch at the B912 Accelerator R&D Area. If there is any injury, personnel rescue required, or re-entry into the area where the fixed oxygen monitor alarmed or POM alarmed, wait for the Fire/Rescue group to arrive.

5.2 Accountability

5.2.1 If the low oxygen alarm is in the ERL enclosure on Controlled Access, the ERL Operator, or the Accelerator R&D Area Space Manager, shall ascertain if all personnel have exited the area and inform the Fire/Rescue Group upon their arrival.

> **Note:**
> There is a B912 R&D Area ODH alarm repeater in the ERL enclosure that warns enclosure occupants to evacuate the enclosure and B912.

5.2.2 If the low oxygen alarm occurs at any other time, the supervisor for workers in the area, or the CAS Watch, is responsible to determine if all workers have exited the area.

5.2.3 If personnel are unaccounted for or injured, the person in charge shall immediately contact Emergency Services using 2222 or 911.

5.3 Entry and Re-entry into ODH area or enclosure following an alarm.

> **Danger**:
> Initial entry into any area or enclosure that has fixed oxygen monitors alarming, or which has been evacuated because of a suspected release of inert gas or a POM alarm, shall be by BNL Fire/Rescue personnel wearing self-contained breathing apparatus. The Fire/Rescue entrants shall take oxygen readings using their own monitoring equipment, and shall report to the C-AD person in charge at the scene the findings of the oxygen measurement and any problems (e.g. leaks) observed during their initial entry.

> **Note:**
> The audible portion of the B912 ODH alarm system may be silenced as described in Attachment 8.2

5.3.1 Verify that the 11,000 gallon LN Dewar Isolation Valve is closed, or close the manual isolation valve, before any entry into the B912 Accelerator R&D Area is considered.

5.3.2 If the source of the cryogen leak can be located, then the flow should be stopped, if possible, by the Cryogenic Section Staff.

5.3.3 If the cryogen leak can not be located, then the Cryogenic Group Supervisor (or designee) shall attempt to locate the leak from outside the building by looking through an open doorway to the area. If the leak can be located in this manner, if possible, attempt to stop the flow from outside the building.

5.3.4 If further action can only be made by entering the area, use the following guidance. The supervisor of the work should determine the required emergency actions based upon this guidance and the particular conditions for the actual emergency.

Danger:
Responding Personnel must request that BNL Fire/Rescue personnel make the initial entry and survey of the area, and any subsequent entries following an evacuation caused by an alarm POM, as per the Danger statement at the beginning of this section.

a) Evaluate the results of the observations and oxygen levels as reported by Fire/Rescue. If there was no sign of a cryogen leak by Fire/Rescue, and if the ERL cryogenic staff does not detect a leak on their instrumentation, then the alarm was spurious and routine operations can continue, after a thorough inspection by cryogenic staff.

b) As long as oxygen levels are >19.5%, as reported by BNL Fire/Rescue before entering the area, entering personnel shall test the operation of their personal oxygen monitors (POM) and verify the readiness of their Self-Rescue Supplied Atmosphere Respirators (SRSARs). The POM shall be calibrated using fresh air, and tested using exhaled air, for alarm function. When entering the area, the POM shall be used to test the air at head level, held ahead of the personnel entering. Each person entering the area shall have a POM and an SRSAR.

Caution:
You may never enter an area with oxygen <19.5% without a Self-Contained Breathing Apparatus (SCBA). The 5-minute escape packs are not SCBAs.

c) An ODH-1 qualified person shall be stationed at the entrance of the area or enclosure, with an oxygen monitor and an SRSAR, and shall maintain contact with all personnel searching for and repairing the leak (visually and/or by radio or telephone).

d) Prior to entry, the supervisor ensures the area exhaust fans (if installed), are running, and that an enhanced work permit is completed for the investigation. The supervisor evaluates the need for extra temporary ventilation to supply fresh air into the area. If oxygen levels on any POM is less than 19.5%, all personnel shall immediately evacuate. The supervisor shall ventilate the area with fresh air for a minimum of 15 minutes before a second attempt at re-

entry. If oxygen levels remain less than 19.5%, reentry will require specific work planning, including appropriate Personal Protective Equipment (PPE).

e) Personnel search the area for the leak while maintaining constant surveillance of oxygen content of the air with their POMs.

f) If personnel do not locate a leak and the detection system is in the alarm state, the supervisor notifies C-AD management. The supervisor initiates a work plan to determine further action.

g) If no leak is found and the oxygen alarms automatically reset, then personnel may resume normal operation, but only if the alarms are not again activated.

h) If personnel locate the leak and the flow can be stopped, run fixed or portable exhaust fans for at least 15 minutes before personnel entry for repairs. If the cryogen or gas flow cannot be stopped, then run fixed or portable exhaust fans and set up a local fan to supply fresh air into the work area until the alarm clears.

i) Repair personnel shall maintain direct contact with personnel outside of the affected area.

j) After personnel isolate and repair the leak and oxygen concentrations are above 20%, access to the area can be returned to normal.

5.3.5 If the ODH condition was real, the Cryogenics Group Supervisor (or designee) shall immediately inform the Department Chair, Associate Chair for ESSHQ, and ESSHQ Division Head. The appropriate log shall also record the actions taken. The Cryogenics Group Supervisor shall record actions taken in the Cryo Control Room Log, and in a report (next business day) to the ES&H Coordinator, C-A ESSHQ Division Head, and the Cryogenics Group Section Head.

6. Documentation

6.1 Cryogenic Control Room Logbook.

6.2 Report to the ES&H Coordinator, and ESSHQ Division Head.

6.3 Report to the Cryogenics Section Head.

6.4 Enhanced Work Permits (if used).

7. References

7.1 SBMS Subject Area Oxygen Deficiency Hazards (ODH).

7.2 C-A USI Determination, ERL ODH Hazard in NEBA and EEBA from 11,000 gallon LN2 Tank (Revised 5-15-12).

8. Attachments

8.1 Accelerator R&D Area ODH Hazard Description.

8.2 Description of B912 Accelerator R&D Area ODH Alarm System and ERL Control Room HMI Panel Use.

Attachment 8.1

Accelerator R&D Area ODH Hazard Description

In order to efficiently supply refrigeration of helium for the prototype Energy Recovery Linac (ERL), in the NEBA portion of B912, and the Large Vertical Test Facility (LVTF), in the EEBA portion of B912, the refrigerator has been combined into one system. Because of this cryogenic plant design, the ODH hazards for the various areas which contain equipment operated by the Accelerator R&D Division has been analyzed to determine the appropriate ODH classifications.

The following specific areas were analyzed to determine the proper ODH Controls necessary to protect personnel and to comply with the BNL SBMS Subject Area, ODH Classification and Controls:

1. Building 912 East Experimental Building Addition (EEBA), houses portions of the helium refrigeration system, the LVTF and the SVTF. Based upon the refrigeration design, EEBA is classified as an ODH-0 area. The reason for this is the fact that an 11,000 gallon LN tank, stored outside of B912 can cause the oxygen concentration to be reduced to ~14% inside B912 Accelerator RD Area if the LN pipe in EEBA fails. There are no active exhaust fans to ventilate this area, and natural building volume exchanges were conservatively ignored in the oxygen transient analysis. To protect personnel, oxygen monitors including audible and visual alarms, are installed in this building to alarm when the oxygen concentration falls to 18% (nominal). This will warn occupants to evacuate the area. In addition, if any oxygen monitor fails, or trips at 18% (nominal), then the 11,000 gallon LN Dewar automatic isolation valve located outside B912 will close to isolate the source of LN from B912. Isolating the LN tank will prevent the actual oxygen concentrations from falling below about 17%.
2. Building 912 Northeast Experimental Building Addition (NEBA), houses the ERL accelerator enclosure. Based upon the refrigeration design, it is required to be classified as an ODH-0 area. The reason for this is the fact that an 11,000 gallon LN2 tank, stored outside of B912, has 1” LN piping throughout the north portion of NEBA. A very conservative analysis of a failure of the LN line shows that the oxygen content in the NEBA portion of B912 can be reduced to ~0%. There are no active exhaust fans to ventilate this area and natural building volume exchanges were conservatively ignored in the oxygen transient analysis. To protect personnel, oxygen monitors, including audible and visual alarms are installed in this building to alarm when the oxygen concentration falls to 18% (nominal). This will warn occupants to evacuate the area. In addition, if any oxygen monitor fails or trips at 18% (nominal), then the 11,000 gallon LN Dewar automatic isolation valve will close to isolate the source of LN from B912. Isolating the LN tank will prevent the actual oxygen concentrations from falling below about 17%.

3. The ERL accelerator enclosure, located in the NEBA portion of B912, has a 12,000 CFM exhaust fan, and the oxygen transient following a failure of the 1” LN2 line in this enclosure results in a minimum oxygen concentration of ~15%, with the fan running. Thus, the classification of this area is ODH-0. The ERL accelerator enclosure, and the ERL laser room, have B912 ODH alarm repeaters to warn occupants of an ODH condition outside these rooms.

4. The ERL Compressor/Vacuum Pump/Water Building, which is outside and just north of B912, was reviewed and is classified as an ODH-0 area. This building has a 2000 CFM exhaust fan that starts when the oxygen sensor detects 18% (nominal) oxygen. The conservatively computed minimum oxygen concentration is found to be ~14.5%, with the fan running.

5. The VTF blockhouse in EEBA has no exhaust fan and will never be occupied when the rolling roof is closed. There is an installed oxygen monitor above the personnel platform grating of the blockhouse to warn personnel of an ODH hazard before the rolling roof is opened to allow access at the top of the blockhouse.

6. The SVTF is located in the EEBA portion of B912 near the LVTF and the ERL/LVTF cryogenics plant. This blockhouse has a 1000 CFM exhaust fan that is always on when the facility is occupied and charged with cryogens. The minimum oxygen concentration in this facility, with the fan running, is ~14%. When cryogens are charged in the test Dewar in this blockhouse, it is an ODH-0 area. In addition, the entrance is posted requiring each entrant to wear a portable oxygen monitor (POM), which alarms at 19.5% oxygen concentration. Because the occupants in the blockhouse have POMs when they enter and the exhaust fan is on, the POM will alarm at 19.5% if an ODH condition exists outside the blockhouse, as the makeup air in the blockhouse is B912 EEBA air. This will warn the occupant to exit the blockhouse.

7. The EEBAA shop has barriers that are normally closed, preventing introduction of inert gasses from the EEBA or NEBA areas. This area is emptied of all personnel by the Local ERL Watch as a precautionary step if any ODH alarms trip.

Attachment 8.2

Description of B912 Accelerator R&D Area ODH Alarm System and ERL Control Room HMI Panel use

1. HMI Panel Use (Panel Rack 6680, ERL Personnel Protection System). The flat screen on this panel allows silencing of the B912 audible ODH alarm in order to facilitate communications during the re-entry process.

   - At the panel, from the main menu select "BLDG 912 ODH" button, which then puts the Bldg. 912 ODH warning system status page on the flatscreen.
   - Push the "Silence Audible Alarm" button at the bottom of this page to silence the audible alarm. The visual strobe lights will continue to function.

   <u>Note:</u>
   After an ODH sensor trip or hardware fault is detected, the audible-visual alarms will remain non-resetable for 60 seconds.

   - Push the "Bldg. 912 ODH Reset" button to reset the entire system, both audible alarm and visual strobe lights. The system will not reset itself when oxygen levels return to normal, but must be manually reset as described above. Reset will not be successful if the ODH condition persists.

2. Locations of B912 Accelerator R&D Area ODH Sensors and Alarms and Strobe Lights.

   2.1 Sensors
   a. B912 NEBA between the East building wall and the ERL building near the LN line, as it penetrates the building wall from the 11,000 gallon outside LN Storage Dewar.
   b. On the B912 EEBA side of the EEBA/NEBA wall on either side of the wide opening near the Cryogenics Plant Equipment.
   c. At the top of the LVTF.
   d. Inside the ERL enclosure.

   2.2 Strobe Lights and Audible Alarms.
   a. At the roof in the center of EEBA (strobe and horn).
   b. At the NEBA/EEBA wall on the EEBA side (strobe and horn).
   c. Above the ERL enclosure at the ceiling of NEBA (strobe and horn).
   d. At the far North wall of NEBA (strobe only).
   e. In the ERL Laser Room (strobe and horn).
   f. In the ERL enclosure (strobe and horn). The ERL enclosure ODH system is activated by the B912 Accelerator R&D Area ODH Alarm System. This is in addition to the activation of the ERL enclosure ODH Alarm System if an oxygen deficiency occurred within the enclosure.

If you are using a printed copy of this procedure, and not the on-screen version, then you MUST make sure the dates at the bottom of the printed copy and the on-screen version match.
The on-screen version of the Collider-Accelerator Department Procedure is the Official Version.
Hard copies of all signed, official, C-A Operating Procedures are available by contacting the ESSHQ Procedures Coordinator, Bldg. 911A

C-A OPERATIONS PROCEDURES MANUAL

18.4.1 Operation of ERL (Electron Recovery Linac) PASS (Particle Accelerator Security System)

Text Pages 2 through 16

Hand Processed Changes

HPC No.	Date	Page Nos.	Initials
_____	_____	_____	_____
_____	_____	_____	_____
_____	_____	_____	_____

Approved: _____***Signature on File***_____ _____
Collider-Accelerator Department Chairman Date

I. Ben-Zvi / J. Reich

18.4.1 Operation of ERL (Electron Recovery Linac) PASS (Particle Accelerator Security System)

CONTENTS

Section		Page
1.0	Purpose	3
2.0	Introduction	3
3.0	System Description	4
3.1	ERL Facility Areas	4
3.2	The ERL PASS	4
3.3	ERL Access Levels	5
3.4	ERL Laser Enabled Mode (LEM)	6
3.5	ERL Accelerator Safety Subsystems (ASSub)	6
3.6	ERL Staff Operations /Activities with PASS in the Field	8
3.7	ERL Staff Operations / Activities with PASS at the Human-Machine Interface (H-MI)	11
3.8	ECR Staff Operations	16
3.9	ERL State Table	16

18.4.1 Operation of PASS

1. Purpose

1.1 This procedure specifies the actions to be used by the ERL Control Room (ECR) Staff when operating the Particle Accelerator Safety System (PASS).

2. Introduction

2.1 ERL Facility Areas - The ERL Facility consists of three areas for operations: Experimental Area (EA); Laser Room (LR) and Klystron Room (KR). There is, in addition, one service area, the Compressor Room (CR).

2.2 ERL PASS – The ERL PASS is a redundant safety system using two independent Allen-Bradley Programmable Logic Controllers (PLCs). The Components, Devices, and Subsystems of ERL PASS are monitored and activated by distributed Input/Output (I/O) modules that communicate with the PLCs.

2.3 ERL Access Levels – There are five Access Levels for ERL as follows: Restricted Access (RA); Controlled Access (CA); Laser Controlled Access (LCA); No Access (NA) and Safe (Emergency) Access (SA). The Access Levels are selectable from the ECR with a Mode Permit Push-button and the respective icon for the Access Level on the H-MI. The Access Levels selectively enables Critical Devices (CDs) by areas: RA, CA and SA enables CDs in the EA and KR; LCA enables CDs in the LR and NA enables CDs in all areas: EA, LR and KR

2.4 Laser Enabled Mode (LEM) – The LEM specifically applies to the LR and enables the Laser Room Shutters 1 (LS1) and 2(LS2). It is not selectable from the ECR like the Access Levels in 2.3. The LEM goes into effect when the LR is swept and the LR must have a sweep to keep the LEM in effect.

2.5 Accelerator Safety Subsystems – There are six ERL Safety Subsystems as follows: Critical Devices (CDs); Entry/Exit (Gates); Emergency (Crash Operators); Sweep (Check Stations); Radiation Monitors (Chipmunks) and Oxygen Defiency Hazard (ODH).

2.6 ERL Staff Operations / Activities with PASS – The PASS Operations / Activities of ERL Staff involve Entry / Exit of the gates under various Access Levels; response to an Emergency with a CO; participation in a Sweep exercise; response to an ODH Alarm and response to a Radiation Alarm.

2.7 ERL Staff Operations / Activities with PASS at the Human-Machine Interface (H-MI)– The PASS Operations / Activities of ERL Staff involve Entry / Exit of the gates under various Access Levels; response to an Emergency with a CO; participation in a Sweep exercise; response to an ODH Alarm and response to a Radiation Alarm.

2.8 ECR Staff Operations – There are three types of operations conducted by the ECR Staff, as follows: Sweep, Accelerator Controlled Access and Accelerator-Function operations.

2.9 The ERL State Table, Peer 29 Document Number 4210021 Rev AX defines the permissible interactions of the Components, Devices and Subsystems of the ERL facility, which are implemented by the PLC programs. It also defines the ERL PASS response(s) to impermissible interactions.

3. System Description

3.1 ERL Facility Areas

3.1.1 The Experimental Area (EA), also called the Blockhouse, is where the Beamline is located and where experiments will be conducted. It has 2 entry/exit gates: EGE1 at the north end and EGE2 at the south end. The EA has 4 check stations, ECS1 thru ECS 4, for the Sweep procedure; 2 ODH sensors along with their Electronic packages, which are located on the East and West walls of the EA and an exhaust Fan and Vent. There are 2 dual-Crash Operators (COs), which incorporate crash cords, on the East and West walls of the EA.

3.1.2 The Laser Room (LR) houses the ERL laser. The LR has 2 entry/exit gates: LGE1 at the North end and a double-door, LGE2, on the South side. The LR has 1 dual-Crash Operator with crash cords. The LR has 1 check station, CS1, for the Sweep procedure.

3.1.3 The Klystron Room (KR) houses the Klystron. The KR has 1 double-door entry/exit gate. The KR is a very heavily shielded room so the doors are extremely heavy. The KR has 1 Crash push-button and 1 Check station push-button for the Sweep procedure.

3.1.4 The Compressor Room (CR) houses the compressor and the refrigerator for the ERL refrigeration system. The CR has 1 ODH sensor with its Electronic package and an exhaust Fan and Vent

3.2 The ERL PASS

3.2.1 The ERL PASS consists of 2 independent safety systems, called Division A and Division B, controlled by Allen-Bradley PLCs. Division A uses a SLC-type controller and Division B uses a PLC-type controller. They are located in the ECR in locked “PLC” enclosures. These controllers communicate by cat 5 cable with distributed I/O modules that, through hard-wiring, monitor and activate the various ERL Components, Devices and Subsystems. The controllers are run by programs which, through

Human-Machine Interface (H-MI), issue commands to the output modules that control the Accelerator Safety Subsystems.

3.3 ERL Access Levels

3.3.1 The Restricted Access (RA) level, also called Mode 8, allows for entry into gates: EGE1, EGE2 and LGE1 by the Card Reader and valid RA Card. The RA level has no programmatic effects on gates LGE2 and KGE1. Gate LGE2 can be entered with a turn of the door handle and KGE1 can be entered with the Kirk key. In RA, all gates can be exited without an Exit Protocol (ExP), defined in § 3.3.2 below. Primary Critical Devices (PCDs), see § 3.5.1.1 below, are disabled in RA; Reachback Critical Devices (RCDs), see § 3.5.1.2 below, are enabled in RA. The laser room must be reset in order to enable LS2. An area will preserve its Sweep in RA until a boundary gate is opened in RA, when the Sweep will be dropped.

3.3.2 The Controlled Access (CA) level, also called Mode 16, allows for entry into gates: EGE1 and EGE2 with an E0008 CA key and a Simultaneous Release (SR) from the H-MI in ECR. If the EA is swept and the sweep is to be maintained EGE1 and EGE2 must be exited using ExP, which consists of holding a SR before the gate is opened for the exit process till the gate is closed after the exit process, as seen on the H-MI. Further the EA can only be swept with ERL in CA. The CA level has no programmatic effects on gates LGE1, LGE2 and KGE1; they may be entered or exited without the need for a SR with the ERL in CA. The PCDs, see § 3.5.1.1, are disabled in CA; the RCDs, see § 3.5.1.2, are enabled in CA.

3.3.3 The Laser Controlled Access (LCA) level, also called Mode 18, allows for entry into gates: EGE1, EGE2 and LGE1 with an RFID; there is an RFID reader on the Outer gate-box at these gates. If the EA or LR is swept there is a 10 sec window for the entry process, opening the gate and re-closing after entry as seen on the H-MI in the ECR, for the Sweep to be maintained. Likewise, on the inside of these gates there is a Pass-thru button which allows a 20 sec window for the exit process, opening the gate and re-closing after exit as seen on the H-MI in the ECR, for the Sweep to be maintained. The LCA level has no programmatic effects on gate KGE1. The PCD, Laser Room Shutter 3 (LRS3), is enabled in LCA along with the RCDs: Laser Room Shutter 2(LS2). The PCDs for the Klystron Power Supply (KPS) and the 50KW PS (50KwPS) are disabled in LCA.

3.3.4 The No Access (NA) level, also called Mode 24 or Operations Mode does not allow entry into gates: EGE1, EGE2. There is no SR in NA and the RFID does not work at EGE1 and EGE2 in NA. The NA level has no programmatic effects on gates LGE1 and KGE1. The PCDs and RCDs in all areas are all Enabled in NA level.

3.3.5 The Safe Access (SA) level, also called Mode 2, allows for entry into gates: EGE1 and EGE2 with an E0008 CA key and a Simultaneous Release (SR) from the H-MI in ECR. If the EA is swept and the sweep is to be maintained EGE1 and EGE2 must be exited using ExP, which consists of holding a SR before the gate is opened for the exit process till the gate is closed after the exit process, as seen on the H-MI. The SA level has no programmatic effects on gates LGE1, LGE2 and KGE1; they may be entered or exited without the need for a SR with the ERL in SA. The PCDs, see § 3.5.1.1 are disabled in SA; the RCDs, see § 3.5.1.2, are enabled in SA.

3.4 ERL Laser Enabled Mode (LEM)

3.4.1 The Laser Enabled Mode (LEM) affects only the LR. It has no programmatic effects on the EA or the KR. Unlike all other Access Levels it is not selectable from the H-MI. The LEM comes into effect with a sweep of the LR and needs the LR to be swept to stay in effect. The LEM allows entry into LGE1 with an RFID and a 10 sec window to preserve the LR sweep. The LEM allows exit from LGE1 with the Pass-thru button and a 20 sec window to preserve the LR sweep. In LEM the PCD, Laser Room Shutter 2 (LS2), and the RCD, Laser Room Shutter 1 (LS1), are enabled and the Laser Warning Sign (LWS) is illuminated.

3.5 ERL Accelerator Safety Subsystems (ASSub)

3.5.1 Critical Devices (CDs) are pieces of equipment used in the normal operations of ERL, and which if disabled, will shutdown the ERL operation in a safe way. There are 2 categories of CDs: Primary CDs (PCDs) and Reachback CDs (RCDs). They earn their nomenclature by their level of dependency. PCDs are the first to respond to an operational problem. Should the PCD fail to shutdown the ERL operation, then a RCD responds. CDs work in pairs: Div A and Div B. The Div A CD is controlled by the Div A PLC and the Div B CD is controlled by the Div B PLC. A CD can be relied upon as a PCD in one Operational configuration and simultaneously as the RCD for another Operational configuration. CDs are associated with areas and may be designated PCD or RCD depending on their function in the area. CDs are totally mode-dependent. They are Enabled, meaning they can be turned-on, in certain modes and Disabled, meaning they cannot be turned-on, in certain modes; they also become a PCD or a RCD depending on the mode.

3.5.1.1 PCDs are: LR Shutter 3 (LS3); Klystron PS Contactors KCD1 and KCD2; 50KW PS Contactors 50KwCD1 and 50KwCD2 for Modes: 2, 8, 16, 18 and 24. LR Shutter 2 (LS2) is a PCD in LEM only.

3.5.1.2 RCDs are: LS2; for Modes: 2, 8, 16, 18 and 24. KCD1, KCD2, 50KwCD1 and 50KwCD2 are RCDs for Mode 24. LR Shutter 1 (LS1) is a RCD for LEM.

3.5.2 The Entry/Exit ASSub consists of 5 gates: EGE1, EGE2, LGE1, LGE2 and KGE1

3.5.2.1 There is a total of 5 ERL gates controlled by the ERL PASS. They are as follows: 2 in the EA (EGE1 and EGE2); 2 in the LR (LGE1 and LGE2) and 1 in the KR (KGE1). The status of gates is recorded by microswitches and gates can be opened from keyswitches, cardreaders and RFIDs. The Electrical wiring and components for gates are housed in enclosures called Gate-boxes (GBs), called Outer if they are outside the enclosed area or Inner if they are inside the enclosed area.

3.5.2.1.1 Gate microswitches can be conventional rocker-arm switches or magnetic switches. The switch status reflects the gate status: Open when the gate is open and closed when the gate is closed. Microswitches are wired to Input modules that relay the status to the PLC controllers.

3.5.2.1.2 The GBs have EB0008 key switches in the Outer gate box for opening the gates and EB0009 key switches in both Inner and Outer gates for resetting the gates.

3.5.2.1.3 The Outer GBs are equipped with a cardreader to allow entry with a swipe card when the area is in RA.

3.5.2.1.4 The Outer GBs are equipped with a RFID to allow entry with a token in CA

3.5.3 The Emergency ASSub consists of 4 Crash Operators: CO1, CO2, LCO1 and KCO1

3.5.3.1 There is a total of 4 COs in the ERL PASS. They are as follows: 2 in the EA (CO1 and CO2) and 1 each in the LR (LCO1) and the KR (KCO1). The purpose of COs is to drop the PASS to SA when activated. With the exception of KCO1 the COs are dual-actuators, with each actuator triggered by a crash-cord about 20 ft in length. This gives an effective crash-coverage distance of 40 ft per dual-actuator. KCO1 is a push-button type actuator.

3.5.4 The Sweep ASSub consists of 6 Check Stations:

3.5.4.1 There is a total of 6 CSs in ERL PASS. They are as follows: 4 in the EA (CS1 thru CS4) and one each in the LR and KR. The 4 CSs in the EA are activated with the E0009 Sweep/Reset key. The CS in the LR is RFID activated and the CS in the KR is push-button activated.

3.5.5 The Radiation ASSub consists of 7 Radiation Monitors (Chipmunks)

3.5.5.1 There is a total of 7 Chipmunks monitoring radiation in different areas of the EA, and are designated NMO 170 thru 176. The Chipmunks are able to interlock the CDs above a radiation level (Rad Trip) or if the Chipmunk fails (Failsafe Trip). This action is pertinent only in NA when the PCDs are enabled. A Rad Trip will disable a CD and hold it disabled until the Trip is cleared, after which the system can be reset and the CD re-enabled. A Failsafe Trip will drop the Access Level to SA in addition to disabling the CD.

3.5.6 The ODH ASSub consists of 3 ODH sensors:

3.5.6.1 There are 3 ODH sensors in the ERL PASS. Two are located in the EA (1AS1 and 1AS2) and the third (1AS3) is in the CR. Sensor 1AS1 is monitored by electronic package Erl-ECB (East Crash Box); sensor 1AS2 is monitored by Erl-WCB (West Crash Box) and sensor 1AS3 is monitored by Erl-CCB (Compressor room Crash Box). Associated with the ODH sensors are Fans and Vents.

3.5.6.1.1 The ERL PASS has 2 fans and 2 vents. Fan EF1 and Vent AV1 are located in the EA. Fan CEF1 and Vent CAV1 are located in the CR. Fans and vents are automatically activated by ODH alarms. They can also be manually activated by local ON/OFF switches.

3.6 ERL Staff Operations / Activities with PASS in the Field

3.6.1 ERL Staff Operations / Activities involving Entry / Exit of gates with various Access Levels

3.6.1.1 Gates LGE2 in the LR and KGE1 in the KR are not affected by ERL Access Levels. LGE2 is entered with the door handle and exited with the exit-bar. KGE1 is entered with the Kirk key if it is locked and exited by manually pushing open. Entry / Exit of LGE2 or KGE1 will drop the Sweep in the LR or the KR respectively.

3.6.1.2 Gate LGE1 in the LR is also not affected by ERL Access Levels, but by LEM. If the LR is not in LEM LGE1 is entered with a Swipe card and exited with the Touch Sense Bar (TSB). If the LR is in LEM, i.e. the LR is Swept, LGE1 is entered with an RFID with a 10-second transit time to preserve the Sweep and exited with the Pass-thru P/B with a 20-second transit time.

3.6.1.3 EGE1 and EGE2 in the EA are affected by the ERL Access Levels.

3.6.1.3.1 In RA EGE1 and EGE2 are are entered with a valid Swipe card and exited with the Touch Sense Bar (TSB). If the area was swept the Sweep will be lost when the gate is opened.

3.6.1.3.2 In CA EGE1 and EGE2 are entered with a CA key # E0008 and a SR from the ECR. If the EA is swept and the Sweep must be preserved EnP must be observed. EGE1 and EGE2 are exited using the TSB along with a SR and ExP if a sweep has to be preserved.

3.6.1.3.3 In LCA EGE1 and EGE2 are entered with an RFID and there is a 10-sec transit time if a sweep must be preserved. EGE1 and EGE2 are exited using a Pass-thru button and there is a 20-sec transit time if a sweep has to be preserved.

3.6.1.3.4 In SA EGE1 and EGE2 are entered with a CA key # E0008 and a SR from the ECR. If the EA is swept and the Sweep must be preserved EnP must be observed. EGE1 and EGE2 are exited using the TSB along with a SR and ExP if a sweep has to be preserved.

3.6.1.3.5 In NA there is no entry into EGE1 and EGE2. The Card Reader, SR and RFID are disabled. EGE1 and EGE2 are exited using the TSB. There is no mechanism for preserving the sweep during an exit in NA, so on exiting EGE1 or EGE2 in NA the EA sweep will be dropped.

3.6.2 ERL Staff Operations / Activities involving Crash Operators with various Access Levels

3.6.2.1 Crash Operators are effective with all Access Levels. They are operated by pulling a crash cord in the EA and LR or pressing a button in the KR. A Crash puts an area into a Safe state by dropping the Access level to SA, disabling the CD(s) that were active (Enabled) for that area and further dropping the Sweep for

the area. A Crash is latched both mechanically and programmatically. To recover, mechanically, from a Crash the Crash Operator has to be restored to an “armed state” which involves moving the crash lever to the “set” position for the cord-type CO or retracting the push-button for the P/B-type CO. To recover, programmatically, from a crash the Crash is reset from the H-MI with a Crash Reset icon or General Reset icon and can take place only after the mechanical reset of the CO.

3.6.3 ERL Staff Operations / Activities involving Sweep Operations

3.6.3.1 The EA can only be swept in CA. The operation is conducted only by Authorized personnel and consists of activating the 4 CSs in a designated sequence according to Sweep Procedure C-A-OPM-ATT n.nn.x1.REVmm. The CSs are activated with an E0009 Sweep/Reset key.

3.6.3.2 The LR can be swept in any of the ERL Access levels. The operation is conducted only by Authorized personnel and consists of activating 1 CS with an RFID Token according to Sweep Procedure C-A-OPM-ATT n.nn.x2.REVmm. Sweeping the LR puts it in LEM.

3.6.3.3 The HR can only be swept in CA. The operation is conducted only by designate personnel and consists of activating a P/B CS according to Sweep Procedure C-A-OPM-ATT n.nn.x2.REVmm.

3.6.4 ERL Staff Operations / Activities involving Radiation Monitors

3.6.4.1 The Chipmunks are installed, replaced and decommissioned by Authorized staff and according to a Chipmunk procedure governing that operation.The List of Chipmunk procedures is as follows:

3.6.4.1.1 Instructions for Chipmunk Installation C-A-OPM-ATT 8.15.3.d

3.6.4.1.2 Chipmunk Computer Interface Test C-A-OPM-ATT 8.15.4.a

3.6.4.1.3 Instructions for Chipmunk Decommissioning C-A-OPM-ATT 8.15.3.b

3.6.5 ERL Staff Operations / Activities involving ODH Sensors

3.6.5.1 The ODH sensors are installed and calibrated by designated staff and according to an ODH procedure governing that operation.The List of ODH procedures is as follows:

3.6.5.1.1 ODH Field Calibration Procedure C-A-OPM-ATT 17.5.1

3.7 ERL Staff Operations / Activities at the H-MI in ECR

3.7.1 Overview of the H-MI Panel – The H-MI panel is touch-screen driven, which means touching a "Command Icon" sends out a command to the system. The H-MI panel has a total of 17 pages of Command and Status icons that Control and Observe ERL. Statuses are provided in Summary form or broken into Div A status and Div B status, the latter being useful for diagnostics. The Pages are organized into Menus and provide Command Icons to directly access the Main menus and execute Operational and Reset functions. The first page is the "ERL Main Menu" and provides Command icons to the Main menus: Operations; ERL Access; Interruptions; Access Control Testing; Maintenance and Gate Crash System.

3.7.1.1 The Operations menu provides the Commands for switching the Access Levels (AL) or Modes: **SA**, **RA, LCA, CA** and **NA** of the EA; selecting the RF Permit; Reset function and accessing the other main menus. It also provides the summary AL, Sweep and Crash statuses of the Zones: EA, LR and KR; summary statuses on the gates: EGE1, EGE2, LGE1 and KGE1; Laser Shutters: LS1, LS2, LS3 and LS4 along with the Laser Warning; Keytree; Chipmunks H/ware and Rad; ODH alarm condition; CDs: 13.8 KV Supply and RF Drive.

3.7.1.2 The ERL Access menu provides Command icons to get to the submenus for the two EA gates: EGE1 and EGE2.

3.7.1.2.1 The EGE1 submenu provides the status: Open, Closed or Reset of EGE1. It also provides Command icons for: SR of EGE1and the Main menus. It provides the statuses for the Sweep and Crash of the EA. This page also has real-time videos from cameras that monitor the inside and outside of gate EGE1.

3.7.1.2.2 The EGE2 submenu provides the status: Open, Closed or Reset of EGE2. It also provides Command icons for: SR of EGE2 and the Main menus. It provides the statuses for the Sweep and Crash of the EA. This page also has real-

time videos from cameras that monitor the inside and outside of gate EGE2.

3.7.1.3 The ERL Interruptions menu provides Command icons to get to the submenus that provide the statuses of the ASSubs: Chipmunks, Crash, H/Ware, Sweep, ODH, PCDs and RCDs.

3.7.1.3.1 The Chipmunks' submenu shows the statuses of the chipmunks NMO 170 thru 176 with individual icons for each chipmunk. These icons show real-time Rad or Failsafe Trips which are not latched. There is one summary icon for Rad Trips which latches and another for Failsafe trips which also latches. There is a Reset icon for Rad Trips and one for Failsafe Trips.

3.7.1.3.2 The Crash submenu shows the statuses of the COs in the EA, LR and KR.These icons show real-time Crash events which are latched. There is a Reset icon to clear the Crash Trip after the CO has been reset.

3.7.1.3.3 The Hardware submenu shows the statuses of the I/O blocks for: CDs, RCDs, Gates, Comm RIO, Rack, UPS, Firewall, P71 Processor, DCMs 0 thru 5. There is a Reset icon to clear faults once the H/ware problem has been corrected.

3.7.1.3.4 The Sweep submenu shows the statuses of the Sweep in the EA, LR and KR.

3.7.1.3.5 The ODH submenu has individual icons to show the statuses of the ODH monitors in the EA and the CR.These icons show real-time ODH alarms which are not latched. There is one summary icon for the EA and another for the CR which latches.There is a Reset icon to clear the ODH alarm once the Oxygen level is back to normal. There are icons for the statuses of the: Fans, Vents, Fire alarm, and Ambient Temp in the EA and the CR.

3.7.1.3.6 The PCD and RCD submenu has icons that show the statuses of the: PCDs, RCDs, RF Drive and 13.8 KV PS. There is a Reset icon for Reachbacks.

3.7.1.4 The ERL Access Controls Testing menu provides commands to get to the submenus that provide the statuses of the ASSubs: Chipmunks, Crash, H/Ware, Sweep, ODH, PCDs and RCDs, similar to the Interruptions menu, § 3.7.1.3, but with the Div A and Div B details.

3.7.1.5 The ERL Maintenance (by peer for both divisions) menu provides Access Level Command icons; Status icon for the mode of each zone; Status icon for the LR; Direct Menu or Submenu selection by cursor and Peer 29 Modes' Help.

3.7.1.6 The Gate Crash System menu provides status icons on: the Emergency Entry and Exit buttons; Gate-crash condition; Fans and Vents Local Control buttons.

3.7.2 ERL Staff Operations / Activities at the H-MI in MCR, involving Entry / Exit of gates

3.7.2.1 Access Levels are selected by pressing the Mode-select button at the console and simultaneously selecting the desired Access Level from the **Operations** menu. The conditions must be appropriate for that Access Level to be selected.

3.7.2.1.1 SA has no System requirements for selection. However, all System faults must be cleared to Get Out of SA.

3.7.2.1.2 RA requires that there be no System faults for selection.

3.7.2.1.3 CA requires that there be no System faults and all gates are Closed for selection.

3.7.2.1.4 LCA requires that there be no System faults and all gates are Closed for selection. LCA can be selected only from the CA level.

3.7.2.1.5 NA requires that there be no System faults; the EA and KR are Swept; EGE1, EGE2 and KGE1 are Reset and ECR Keytree is Complete for selection. NA can be selected only from the CA level.

3.7.2.2 A SR for a gate is given by pressing the gate icon in the ERL Access menu. A SR can be given only in Access Levels: SA and CA, and are necessary for entry in those Access Levels along with a CA key, E0008, to open the gate. A buzzer sounds and a light is turned on at the gate while the SR is in process. If the area is swept EnP and ExP must be observed during gate transit.

3.7.3 ERL Staff Operations / Activities at the H-MI in MCR, involving response to COs

3.7.3.1 When a CO is activated its Crash status can be observed on the Operations menu page and also on the Crash submenu page of the Interruptions menu. A Crash in any area: EA, LR or KR will drop the system into SA from any other Access Level. To get out of a crashed state, the CO must first be mechanically reset or armed. Then the crash must be reset at the software level with the Crash Reset Icon or other General reset icon. This reset process is necessary to get the system out of SA.

3.7.4 ERL Staff Operations / Activities at the H-MI in MCR, involving participation in a Sweep exercise.

3.7.4.1 The EA and the KR can be swept only with ERL in CA. The LR can be swept with ERL in any access Level.

3.7.4.1.1 To sweep the EA, verify on the Sweep submenu page of the Interruptions menu that the status of the EA sweep is No Sweep. Place ERL in CA. Sweep EA according to C-A-OPM-ATT n.mm.ea.REVz. Verify at end of sweep that the status of the EA sweep is Sweep Good.

3.7.4.1.2 To sweep the KR, verify on the Sweep submenu page of the Interruptions menu that the status of the KR sweep is No Sweep. Place ERL in CA. Sweep KR according to C-A-OPM-ATT n.mm.kr.REVz. Verify at end of sweep that the status of the KR sweep is Sweep Good.

3.7.4.1.3 To sweep the LR, verify on the Sweep submenu page of the Interruptions menu that the status of the LR sweep is No Sweep. ERL could be in any Access Level. Sweep EA according to C-A-OPM-ATT n.mm.lr.REVz. Verify at end of sweep that the status of the LR sweep is Sweep Good.

3.7.5 ERL Staff Operations / Activities at the H-MI in MCR, involving response to an ODH Alarm.

3.7.5.1 When a CO is activated its Crash status can be observed on the Operations menu page and also on the Crash submenu page of the Interruptions menu. A Crash in any area: EA, LR or KR will drop the system into SA from any other Access Level. To get out of a crashed state, the CO must first be mechanically reset or armed. Then the crash must be reset at the software level with the Crash

Reset Icon or other General reset icon. This reset process is necessary to get the system out of SA.

3.7.6 ERL Staff Operations / Activities at the H-MI in MCR, involving response to an ODH Alarm.

3.7.6.1 When an ODH is activated its Alarm status can be observed on the Operations menu page and also on the ODH submenu page of the Interruptions menu. An ODH alarm in the EA will drop the system into SA from any other ALs: 2, 8, 16 and 18; Al 24 will remain in AL 24 for an ODH Alarm. An ODH alarm in the CR has no effect on the ALs. To clear the ODH alarm the Oxygen level in the ODH area must first get up to the required ~21.0 % ambient level. The real-time ODH status icon will be normal but the Alarm status icon will show an alarmed state. The ODH alarm must be reset at the software level with the ODH Reset Icon or other General reset icon. This reset process is necessary to get the system out of SA.

3.7.7 ERL Staff Operations / Activities at the H-MI in MCR, involving response to a Chipmunk alarm, which come in two types: Rad Trip, a response to radiation above a prescribed level and Failsafe Trip, a response to the Chipmunk's circuitry self-detection that it is no longer functional

3.7.7.1 When a Chipmunk is activated its Alarm (Rad) status can be observed on the Operations menu page and also on the Chipmunk submenu page of the Interruptions menu. Chipmunk Rad Trips do not affect the ALs. They will stay where they are including Mode 24. To clear the Chipmunk alarm the Radiation level in the area must first get down to the required ambient level. The real-time Chipmunk status icon will be normal but the Alarm status icon will show a Rad Trip. The Rad Trip must be reset at the software level with the Rad Reset Icon or other General reset icon. This reset process is necessary re-enable CDs that were disabled because of the Rad Trip.

3.7.7.2 When a Chipmunk Fails its Alarm (Failsafe) status can be observed on the Operations menu page and also on the Chipmunk submenu page of the Interruptions menu. Chipmunk Failsafe Trips do not affect the ALs: 2, 8, 16 and 18. A Chipmunk Failsafe Trip will drop AL 24 to AL 2 with the subsequent disabling of CDs that need Mode 24 to be Enabled. CDs that are enabled in Mode 2 will remain Enabled in Mode 2. To clear the Chipmunk Failsafe alarm the Chipmunk must be restored to normal working condition – in practice it is replaced with a working unit. The real-time Chipmunk status icon will be normal but the Alarm status icon will show a Failsafe Trip. The Failsafe Trip must be reset at the software level with the Chipmunk Hardware Reset Icon or other General

Hardware reset icon. This reset process is necessary to get out of Mode 2 and back to Mode 24.

3.8 ECR Staff Operations – There are three types of operations conducted by the ECR Staff, as follows: Sweep, Accelerator Controlled Access and Accelerator-Function operations.

3.9 The ERL State Table, Peer 29 Document Number 4210021 Rev AX defines the permissible interactions of the Components, Devices and Subsystems of the ERL facility, which are implemented by the PLC programs. It also defines the ERL PASS response(s) to impermissible interactions.

If you are using a printed copy of this procedure, and not the on-screen version, then you MUST make sure the dates at the bottom of the printed copy and the on-screen version match.
The on-screen version of the Collider-Accelerator Department Procedure is the Official Version.
Hard copies of all signed, official, C-A Operating Procedures are available by contacting the ESSHQ Procedures Coordinator, Bldg. 911A

ATTACHMENT

18.4.1.a ERL Experimental Area Sweep Checklist

C-A OPM Procedures in which this Attachment is used.		
4.56		
18.4.1		

Hand Processed Changes

HPC No.	Date	Page Nos.	Initials

Approved: ***Signature with Date on File***
Collider-Accelerator Department Chairman Date

C. Naylor

18.4.1.a ERL Experimental Area Sweep Checklist

ERL EXPERIMENTAL AREA SWEEP CHECKLIST

Team Leader (**TL**): _____ Operator 2 (**Op2**): _____

Operator 3 (**Op3**): _____

Time: ____ : _____ Date: _____ / _____ / _____

Defn of Sweep: An alert thorough walk through a controlled area for the purpose of locating personnel in the area to instruct them to proceed immediately to a designated Exit gate for general exit under **Simultaneous Release** at the end of Sweep.

- ☐ **Verify** with ERL Control Room (ECR) that ERL Experimental area is ready to be Swept.

Before beam operations commence:

- ☐ **Verify** that the west area surrounding the ERL Experimental area has been swept free of personnel and secured (C-A-OPM 18.4.2) before commencing the sweep of the ERL Experimental area.
- ☐ **Verify** that the ERL Experimental area roof has been swept free of personnel and secured (C-A-OPM 18.4.3).
- ☐ Sweepers should enter the ERL Experimental Area, stand at a location where they can be heard within the facility, and announce that the sweep is about to commence in order to allow all occupants to leave the area.

Conduct ERL Expt area sweep following prerequisites and steps 1 thru 16 listed below.

During Sweep all personnel encountered in the ERL Experimental area (EA) must proceed immediately to the designated Exit gate, EGE1, **and wait there** for general exit under **Simultaneous Release** of **all** personnel in the ERL area at the end of Sweep.

Defn of Static Watch: 1. Maintaining vigilance over a region or area while holding a fixed position during the course of a sweep; 2. To be on the lookout for personnel that must vacate a region or area as required by a sweep.

PRECAUTION:

Once the first check station has been activated **opening** EGE1 or EGE2 **with or without a Simultaneous Release** will **abort** the Sweep process and **TL** will have to **restart** at the first check station.

Prerequisites:

- Two trained persons to perform the sweep, One person to stand static watch during the sweep, One person to control the access state in the ERL control room
- ERL Experimental Area Sweep Checklist for C-A-OPM-ATT 18.4.1.a
- TLD, Portable Radios for communications between TL, Op2, and Op3
- Keys: Two Sweep / Reset (S/R) EB0009 Keys (one each for TL and Op2), one Controlled Access (CA) EB0008 for Op3
- ERL Experimental Area set to CA
- Ladders to both platforms at 5-cell tank and at e-Gun CryoModule must be in-place

Step				
1		**Station**	Sweep Team (ST) proceeds to Entry gate EGE2.	
	☐	**Verify**	ST is in	**Position**
2		**TL**	Request from ERL Control Room (ECR) ERL Expt area be placed in	**Controlled Access (CA)**
3		**ST**	Enter ERL Expt area thru EGE2 with CA release and EB0008 key.	
4		**TL**	Starts the Sweep by activating Check Station 1 (ECS1) at EGE2 Inner Gate Box with Sweep key EB0009 and holds key until the Area Secured light goes	**ON then OFF**
	☐	**Verify**	With key capture ECS1 Area Secured light came	**ON**
	☐	**Verify**	With key still captured ECS1 Area Secured light went	**OFF**
5		**ST**	Sweeps through labyrinth to opening between shield blocks at North end of ERL ring.	
6		**Op3**	Stands static watch between shield blocks at North end of ERL ring (position "✠" on sweep drawing).	
	☐	**Verify**	Op3 is in	**Position**
7		**TL**	Sweeps area to Check Station 2 (ECS2) located on East wall of ERL Expt area taking care to look into center of ERL ring, underneath beamline, underneath beam dump, toward both sides of ring, above at cable trays/piping/shield-blocks, and up onto 5-cell ballast tank platform.	
8		**TL**	Activates ECS2 with Sweep key EB0009 and holds key until the Area Secured light goes	**ON then OFF**
	☐	**Verify**	With key capture ECS2 Area Secured light came	**ON**
	☐	**Verify**	With key still captured ECS2 Area Secured light went	**OFF**
9		**Op2**	Sweeps area up to Check Station 3 (ECS3) located on West wall of ERL Expt area taking care to look into center of ERL ring, above at cable trays/piping/shield-blocks, and holds position at ECS3 looking up to check platform next to 5-cell ballast tank and top of gun cryostat.	
10		**TL**	Indicates to Op2 that area up to ECS2 is secure and that Op2 may proceed to activate Check Station 3.	
11		**Op2**	Activates ECS3 with Sweep key EB0009 and holds key until the Area Secured light goes	**ON then OFF**
	☐	**Verify**	With key capture ECS3 Area Secured light came	**ON**
	☐	**Verify**	With key still captured ECS3 Area Secured light went	**OFF**

12		**TL**	Holds position at ECS2 and inspects region around 5-cell tanks and platform.	
13		**Op2**	Sweeps to 5-cell tanks and platform, and then climbs ladder and inspects platform, and then climbs back down and sweeps back to ECS3 and holds position there.	
14		**TL**	Sweeps South to e-Gun CryoModule, and then climbs ladder and inspects platform, and then climbs back down and sweeps South to mouth of labyrinth to EGE1 and holds position there.	
15		**Op2**	Scans entire region to include platforms/cable trays/shield-blocks, and then sweeps South to mouth of labyrinth to EGE1 and joins TL.	
16		**Op3**	Proceeds to mouth of labyrinth to EGE1 and joins TL and Op2.	
17		**ST**	Sweeps through labyrinth to Check Station 4 (ECS4) located on EGE1 Inner Gate Box at Southeast corner of ERL Expt area.	
18		**TL**	Activates ECS4 with Sweep key EB0009 and holds key until the Area Secured light goes	**ON**
	☐	**Verify**	With key capture ECS4 Area Secured light came	**ON**
	☐	**Verify**	With key release ECS4 Area Secured light remains	**ON**
19		**ST**	ST and all personnel waiting at EGE1, exit EGE1 with Simultaneous Release from ECR	
	☐	**Verify**	No personnel left inside	**ERL AREA**
20		**TL**	Resets EGE1 on Outer gate box with Reset key EB0009.	
	☐	**Verify**	EGE1 Gate Reset light is	**ON**
	☐	**Verify**	EGE1 Area Secured light is	**ON**
	☐	**Verify**	ECR sees gate EGE1 is	**RESET**
	☐	**Verify**	ECR sees ERL sweep is	**SWEEP OK**
21		**TL**	Proceeds, externally, to gate EGE2 Outer gate box.	
	☐	**Verify**	EGE2 Area Secured light is	**ON**
	☐	**Verify**	EGE2 Gate Reset light is	**OFF**
22		**TL**	Resets EGE2 on Outer gate box with Reset key EB0009.	
	☐	**Verify**	EGE2 Gate Reset light is	**ON**
	☐	**Verify**	ECR sees gate EGE2 is	**RESET**
	☐	**Verify**	ECR sees ERL sweep is **still**	**SWEEP OK**
23		**TL**	Confirms with ECR Sweep of ERL area is	**COMPLETED**

24 **End of Sweep Procedure Summary**

- ☐ **Verify** No personnel in ERL Expt area at end of sweep.
- ☐ **Verify** ERL Expt area sweep is completed.
- ☐ **Verify** ERL Expt area sweep Completed Checklist is filed in Completed Sweep Log Binder.

Signatures: TL _____ Op2 _____

Op3 _____

SWEEP DRAWING FOR ERL EXPERIMENTAL AREA

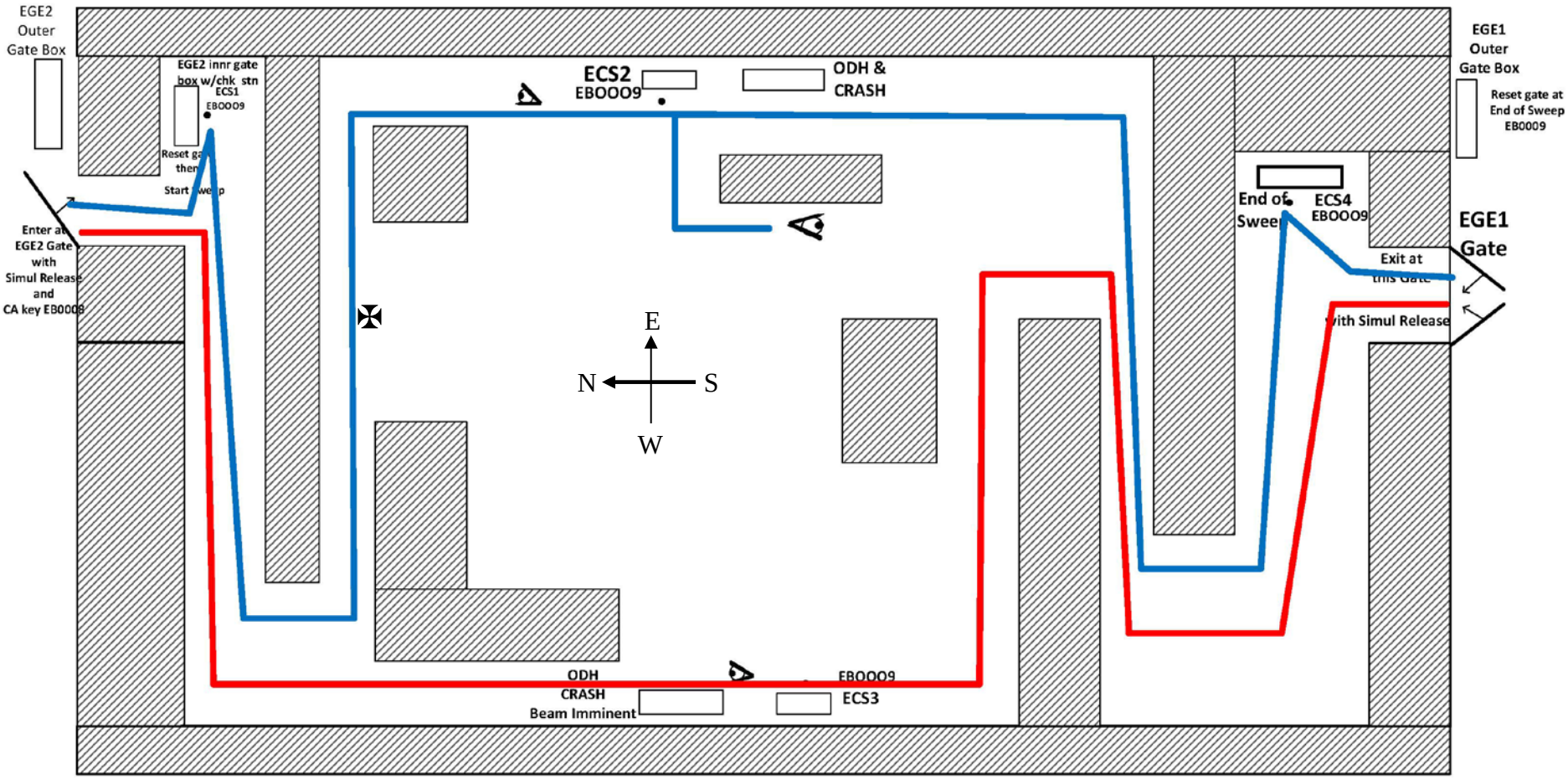

KEYS: Gate Reset / Sweep EB0009
CA EB0008

Operator 1 + Operator 2 = Stop & Look Up

✠: Static Watch position of Op3

If you are using a printed copy of this procedure, and not the on-screen version, then you MUST make sure the dates at the bottom of the printed copy and the on-screen version match.
The on-screen version of the Collider-Accelerator Department Procedure is the Official Version.
Hard copies of all signed, official, C-A Operating Procedures are available by contacting the ESSHQ Procedures Coordinator, Bldg. 911A

C-A OPERATIONS PROCEDURES MANUAL

18.4.2 Accessing/Securing ERL West Alley During Beam Operations

Hand Processed Changes

HPC No.	Date	Page Nos.	Initials

Approved: _____***Signature with Date on File***_____
Collider-Accelerator Department Chairman Date

C. Zarcone

18.4.2 Accessing/securing ERL West Alley during Beam Operations

1. Purpose

1.1 To instruct personnel on procedure for accessing/securing the ERL West Alley during Beam Operations.

2. Responsibilities

2.1 The Radiological Control Technician (RCT)is responsible for providing access and monitoring radiological conditions once personnel have entered.

Note: "Pull-Tite" security seals are available in ERL Control Room and/or from the C-A ESSHQ Safety Engineering Group.

2.2 When access is complete, the RCT must make sure that the area is secured, swept free of personnel, and that the breakaway ties ("Pull-Tite" security seals) have been installed on both gates.

3. Prerequisites

3.1 Personnel wishing to access the area shall notify the ERL Control Room and the on-duty RCT.

4. Precautions

4.1 Any time an access is made to the area during beam operations, the RCT must accompany the entrant, both to open the area and to monitor radiation levels.

5. Procedures

5.1 The RCT shall open the gate using the MA-1 key. (Gate will lock from the outside upon closing, but can be opened from inside using door knob)

5.2 The RCT shall monitor radiation levels within the area and warn personnel of any hazardous conditions.

5.3 When work in the area has been completed, the RCT shall secure the area by performing sweep procedure:

5.3.1 Enter area and close gate behind you.

5.3.2 Proceed to far end and ensure that other gate is also closed.

5.3.3 Travel back to the entrance, clearing the area of personnel.

5.3.4 Exit area, ensuring gate automatically locks when closed.

5.3.5 Install/replace any missing breakaway ties (one on each gate) on both gates to indicate area is swept and secure.

5.4 Once secured, each successive access into the area during beam operations will require a personnel sweep and replacement of any missing breakaway ties.

6. Documentation

6.1 Include verification of the sweep performed on **ERL Experimental Area Sweep Checklist**, OPM 18.4.1.a

7. References

7.1 None

8. Attachments

8.1 None

If you are using a printed copy of this procedure, and not the on-screen version, then you MUST make sure the dates at the bottom of the printed copy and the on-screen version match.
The on-screen version of the Collider-Accelerator Department Procedure is the Official Version.
Hard copies of all signed, official, C-A Operating Procedures are available by contacting the ESSHQ Procedures Coordinator, Bldg. 911A

C-A OPERATIONS PROCEDURES MANUAL

ATTACHMENT

18.4.2.b Small Vertical Test Facility (SVTF) Sweep Checklist

C-A OPM Procedures in which this Attachment is used.		
4.56		

Hand Processed Changes

HPC No.	Date	Page Nos.	Initials
_____	_____	_____	_____
_____	_____	_____	_____
_____	_____	_____	_____

Approved: _____***Signature on File***_____ _____
Collider-Accelerator Department Chairman Date

C. Naylor

18.4.2.b Small Vertical Test Facility (SVTF) Sweep Checklist

(Designated experimenter/CAS):

Time: Date:

Warning:
Little Block House (LBH) should be void of personnel once sweep is complete.

Prerequisites

- One person to perform sweep (Designated experimenter/CAS).
- C-A TPL 11-20 ATT 8.1 "Little Block House Sweep Checklist".
- TLD, SRD, Flashlight, POM [if Liquid Helium (LHe) is present in cryostat].
- Enable that allows RF amplifier to apply power to experimental apparatus inside LBH removed.
- LBH set to RESTRICTED ACCESS (R/A) mode before entering enclosure.
- Operation of ODH exhaust fan (if LHe is present in cryostat).

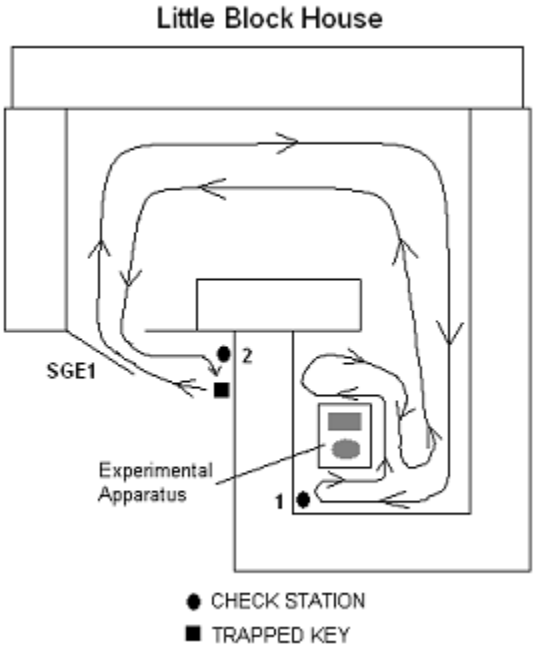

Check

____1. Confirm whether or not LHe is present in cryostat.

> **Warning:**
> If the HAZARD WARNING indicator (ACS box 6474) and the SRF CRITICAL DEVICE indicators (SCDA1 POWER, SCDA2 POWER, SCDB1 POWER) are lit (ACS box 6480), then the enable is present that allows power from the RF amplifier to be applied to the experimental apparatus inside the LBH.

____2. Scan RF-ID to retrieve Od key from TRAPPED KEY key switch (ACS box 6475),

___swipe RF-ID over HID reader (light on reader should turn from red to green),

___un-capture key by turning key counterclockwise (CCW) from horizontal (KEY TRAPPED) position to vertical (KEY FREE) position,

___remove key from key switch.

> **Note:**
> If the HAZARD WARNING indicator (ACS box 6474) and the SRF CRITICAL DEVICE indicators (SCDA1 POWER, SCDA2 POWER, SCDB1 POWER) are lit (ACS box 6480), then the indicators will go out when the Od key is un-captured thereby removing the enable for the RF amplifier to apply power to the experimental apparatus inside the LBH.

____3. Ensure enable is removed that allows RF amplifier to apply power to experimental apparatus inside LBH,

___verify HAZARD WARNING indicator is out (ACS box 6474),

___verify SRF CRITICAL DEVICE indicators (SCDA1 POWER, SCDA2 POWER, SCDB1 POWER) are out (ACS box 6480).

> **Note:**
> If LBH is in NO ACCESS (N/A) mode, then enclosure switches to SAFE STATE (S/S) mode when Od key is un-captured (ACS box 6474).

____4. Ensure LBH is set to R/A (ACS box 6474).

___IF LBH is in S/S after retrieving Od key, THEN set enclosure to R/A by pressing H/W RESET – MODE CHANGE button (ACS box 6475).

___Observe R/A light is lit (ACS box 6474).

____5. Turn on lights/fan with CONTROLS CONTACTOR switch at right side of door SGE1.

____6. Ensure ODH exhaust fan is running by listening for operation before entering LBH if LHe is present in cryostat.

____7. Enter LBH through SGE1 using RHIC (Blue/Pink) access card with card reader to right of door (ACS box 6474).
____8. Make announcement that all personnel must leave the enclosure.

Warning:
Personnel found in the LBH during the sweep must leave with the individual performing the sweep.

____ 9. Sweep to the right along labyrinth to area containing apparatus.
____10. Search area for personnel checking in and around any apparatus.

Note:
If sweep is not completed within 45 seconds of setting first check station, then sweep must be restarted.

____11. Set first check station (CS1) at far corner of area (ACS box 6841),
___insert Od key in key switch,
___turn key clockwise (CW) and then counterclockwise (CCW), from **0** (OFF) position to **1** (ON) position back to **0** (OFF) position,
___observe SWEEP STATUS light turn on then turn off,
___remove Od key from key switch.
____12. Sweep back through labyrinth to SGE1.
____13. Exit LBH through SGE1 and turn off lights/fan.
____14. Set second check station (SWEEP CHECK STATION #2) to right of SGE1 (ACS box 6474),
___insert Od key in key switch,
___turn key CW and then CCW, from **0** (OFF) position to **1** (ON) position back to **0** (OFF) position,
___observe AREA SECURED light turns on and stays lit (ACS box 6474),
___remove Od key from key switch.
____15. Capture Od key in TRAPPED KEY key switch (ACS box 6475),
___insert key in key switch,
___turn key CW from vertical (KEY FREE) position to horizontal (KEY TRAPPED) position,
___observe R/A light goes out and N/A light turns on and stays lit (ACS box 6474),
___hear BEAM IMMINENT alarm sound for 45 second.
____16. Observe and listen for the following after 45 seconds,
___HAZARD WARNING light turns on and stays lit (ACS box 6474),
___SRF CRITICAL DEVICE indicators (SCDA1 POWER, SCDA2 POWER, SCDB1 POWER) turn on and stay lit (ACS box 6480),
___BEAM IMMINENT alarm stops.
____17. Notify experimental personnel that sweep is complete.
____18. File completed checklist in “Completed Little Block House Sweep Checklist Binder”.

If you are using a printed copy of this procedure, and not the on-screen version, then you MUST make sure the dates at the bottom of the printed copy and the on-screen version match.
The on-screen version of the Collider-Accelerator Department Procedure is the Official Version.
Hard copies of all signed, official, C-A Operating Procedures are available by contacting the ESSHQ Procedures Coordinator, Bldg. 911A

C-A OPERATIONS PROCEDURES MANUAL

ATTACHMENT

18.4.2.c Large Vertical Test Facility (LVTF) Sweep Checklist

C-A OPM Procedures in which this Attachment is used.		
4.56		

Hand Processed Changes

HPC No.	Date	Page Nos.	Initials
_____	_____	_____	_____
_____	_____	_____	_____
_____	_____	_____	_____

Approved: _____***Signature on File***_____ _____
Collider-Accelerator Department Chairman Date

C. Naylor

18.4.2.c Large Vertical Test Facility (LVTF) Sweep Checklist

(Authorized person):

Time: Date:

Warning:
Vertical Test Facility (VTF) should be void of personnel once sweep is complete.
No personnel should be working at any elevation along or about the outsides walls of VTF once sweep is complete.

Prerequisites

- One authorized person to perform sweep
- C-A TPL 12-11 ATT 8.1 "Vertical Test Facility Sweep Checklist"
- Guide to Operate VTF Roof (copy posted at Roof Controller)
- TLD, Flashlight
- VTF set to RESTRICTED ACCESS (RA) mode
- Deck grating at ladder into pit in VTF enclosure must be locked in-place
- VTF East and West Roof Cameras must be operational
- VTF Roof must be operational

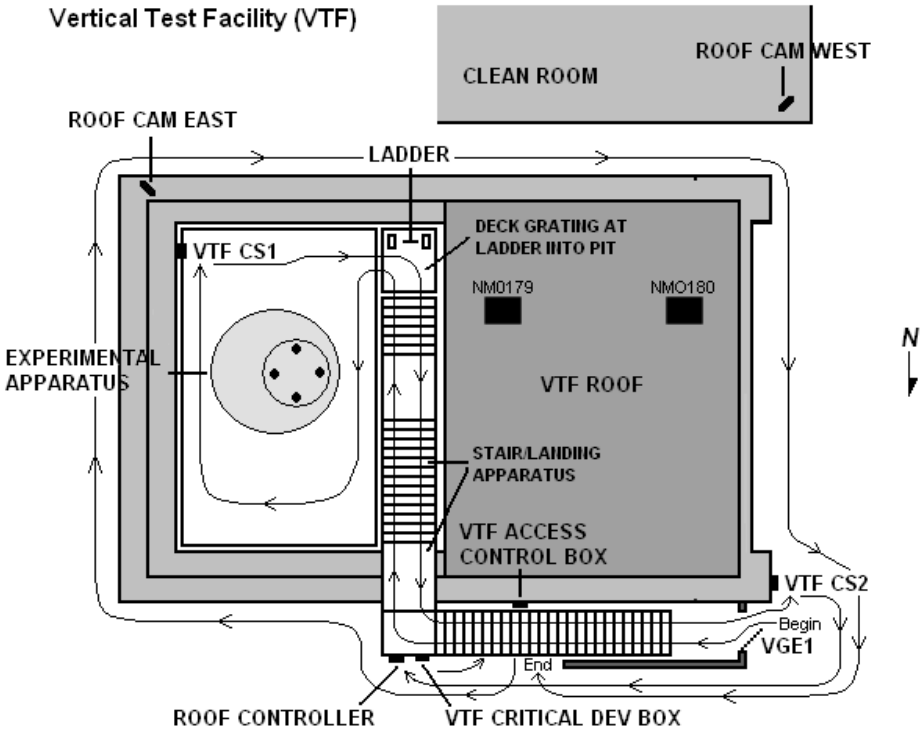

Check

Note:
VTF Roof must be operational before the sweep begins. A copy of the Guide to Operate the VTF Roof should be posted at the Roof Controller (ENCLOSURE #6412).

____1. Confirm VTF Roof is operational.

Warning:
IF the VTF enclosure/roof area is not clearly visible when using the VTF ROOF CAM EAST and VTF ROOF CAM WEST monitors, located above the ROOF CONTROLLER (ENCLOSURE #6412) and the VTF CRITICAL DEV BOX (ACS Box 6504), THEN abort the sweep until proper video is restored so that the area can be clearly seen when using the monitors.

____2. Verify VTF enclosure/roof area is clearly visible when using VTF ROOF CAM EAST and VTF ROOF CAM WEST monitors.

Warning:
IF the deck grating at the ladder down to the pit inside the VTF is not locked in-place, THEN abort the sweep until qualified individuals have cleared the pit of personnel and locked the deck grating in-place.

____3. Ensure deck grating at ladder down to pit inside VTF is locked in-place.

Warning:
IF the red HAZARD indication and the magenta on indications for [VCD1A1 & A2, VCD1B, VCD2A1 & A2, VCD2B] appear on the Allen-Bradley PanelView screen (HMI-Human Machine Interface) (ACS Box 6500), and the VTF CRITICAL DEV indicators [VCD1A1, VCD1A2, VCD1B, VCD2A1, VCD2A2, VCD2B] are lit (ACS Box 6504), THEN the enable is present that allows power from the RF amplifier(s) to be applied to the experimental apparatus inside the VTF.

____4. Scan RF-ID to retrieve Ab key from TRAPPED ACCESS KEY switch on VTF ACCESS CONTROL BOX (ACS Box 6500),
- ___swipe RF-ID over HID reader (light on reader should turn from red to green),
- ___un-capture Ab key by turning key counterclockwise (CCW) from horizontal (KEY TRAPPED) position to vertical (KEY FREE) position,
- ___remove Ab key from key switch.

Note:
IF the red HAZARD indication and the magenta on indications for [VCD1A1 & A2, VCD1B, VCD2A1 & A2, VCD2B] appear on the Allen-Bradley PanelView screen (HMI-Human Machine Interface) (ACS Box 6500), and the VTF CRITICAL DEV indicators [VCD1A1, VCD1A2, VCD1B, VCD2A1, VCD2A2, VCD2B] are lit (ACS Box 6504), THEN the red HAZARD indication should change to a green NO HAZARD indication, the magenta on indications should change to green off indications, and the VTF CRITICAL DEV indicators should go out when the Ab key is un-captured thereby removing the enable for the RF amplifier(s) to apply power to the experimental apparatus inside the VTF.

____5. Ensure enable is removed that allows RF amplifier(s) to apply power to experimental apparatus inside VTF,
- ___verify red HAZARD indication changed to green NO HAZARD indication on HMI (ACS Box 6500),
- ___verify magenta on indications changed to green off indications for [VCD1A1 & A2, VCD1B, VCD2A1 & A2, VCD2B] on HMI (ACS Box 6500),
- ___verify VTF CRITICAL DEV indicators [VCD1A1, VCD1A2, VCD1B, VCD2A1, VCD2A2, VCD2B] are out (ACS Box 6504).

Note:
IF the VTF is in NO ACCESS (NA) mode, THEN the enclosure changes to SAFE ACCESS (SA) mode when the Ab key is un-captured (ACS Box 6500).

Note:
VTF must be set to RESTRICTED ACCESS (RA) mode prior to performing sweep of enclosure.

____6. Ensure VTF is set to RA by viewing HMI (ACS Box 6500).
- ___IF VTF is in SA after retrieving Ab key, THEN set enclosure to RA by pressing H/W RESET BUTTON (ACS Box 6500).
- ___Observe red SA indication change to green RA indication on HMI (ACS Box 6500).
- ___Observe SAFE ACCESS light is out and RESRICTED ACCESS light is lit (ACS Box 6498).

____7. Enter VTF through VGE1 using RHIC (Blue/Pink) access card with card reader to right of door (ACS box 6498).

____8. Proceed up stairs into VTF enclosure.

Warning:
Personnel found in the VTF enclosure during the sweep must leave with the individual performing the sweep.

____ 9. Make announcement that all personnel must leave the enclosure.
____10. Sweep to the right, clockwise (CW) around the EXPERIMENTAL APPARATUS.
____11. Search area for personnel, checking in and around any apparatus.
____12. Verify with flashlight and verbal announcements that no personnel exist below deck grating in VTF pit.
____13. Verify deck grating at ladder down to VTF pit is locked in-place.

> **Note:**
> IF VTF roof is not closed within 1200 seconds (20mins) of setting VTF CS1, THEN sweep of enclosure must be restarted. Countdown timer on HMI (ACS Box 6500) indicates time remaining to close roof.

____14. Set first check station (VTF CS1) at Southeast (SE) corner of area (ACS box 6497),
___insert Ab key in key switch,
___turn key clockwise (CW) and then counterclockwise (CCW), from **0** (OFF) position to **1** (ON) position back to **0** (OFF) position,
___observe VTF CS1 light turns on then turns off,
___remove Ab key from key switch.
____15. Sweep to stairs and check space between VTF roof and shield blocks.
____16. Sweep back up stairs to the upper landing at outside of enclosure wall.

> **Warning:**
> Use designated pull-point and be aware of pinch-points when raising stair/landing apparatus that leads into VTF enclosure.

____17. Carefully pull-up stair/landing apparatus that leads into enclosure and lock apparatus in up position using locking pin to lower left of hinges.
____18. Visually scan overall VTF enclosure/roof area for personnel.
____19. Sweep down remaining stairs to a good position for visual inspection of space underneath VTF roof.
____20. Visually inspect space underneath VTF roof for personnel.
____21. Continue sweep down remaining stairs and exit through VGE1.
____22. Set second check station (VTF CS2) to right of VGE1 (ACS box 6498),
___insert Ab key in key switch,
___turn key CW and then CCW, from **0** (OFF) position to **1** (ON) position back to **0** (OFF) position,
___observe VTF CS2 light turns on then turns off (ACS Box 6498),
___remove Ab key from key switch.
____23. Proceed to ROOF CONTROLLER (ENCLOSURE #6412),
___verify no personnel are in or on enclosure/roof area using VTF ROOF CAM monitors above,
___make verbal announcement indicating closing VTF roof,
___close roof as per Guide to Operate VTF Roof,
___observe roof is closed using VTF ROOF CAM monitors above.
____24. Observe yellow NO SWEEP indication changed to O.D. green SWEEP OK indication on HMI (ACS Box 6500).
____25. Capture Ab key in TRAPPED ACCESS KEY switch (ACS box 6500),

___insert Ab key in key switch,
___turn Ab key CW from vertical (KEY FREE) position to horizontal (KEY TRAPPED) position,
___observe green RA indication change to magenta NA indication on HMI (ACS Box 6500),
___hear BEAM IMMINENT alarm sound for 30 second.

____26. Observe and listen for the following after 30 seconds,
___green NO HAZARD indication changes to red HAZARD indication on HMI (ACS box 6500),
___VCD1A1 & A2 and VCD1B indications on HMI (ACS Box 6500) change from green off to magenta on,
___VCD2A1 & A2 and VCD2B indications on HMI (ACS Box 6500) change from green off to magenta on,
___VTF CRITICAL DEV indicators [VCD1A1, VCD1A2, VCD1B, VCD2A1, VCD2A2, VCD2B] turn on and stay lit (ACS box 6504),
___BEAM IMMINENT alarm stops.

Warning:
Any ladders/scaffolding not permanently affixed in place on or about the outside walls of VTF should be removed before the sweep is fully complete.

____27. Sweep CW around the outside of VTF to ensure no personnel are working at any elevation along or about the outside walls.

____28. Verify, the red HAZARD WARNING and NO ACCESS lights are lit, the yellow AREA SECURED and VTF CS2 lights are lit, and the green RESTRICTED ACCESS and yellow SAFE ACCESS lights are out, on ACS Box 6498 adjacent to VGE1.

____29. Notify experimental personnel that sweep is complete.

____30. File completed checklist in “Completed Vertical Test Facility (VTF) Sweep Checklist Binder”.

If you are using a printed copy of this procedure, and not the on-screen version, then you MUST make sure the dates at the bottom of the printed copy and the on-screen version match.
The on-screen version of the Collider-Accelerator Department Procedure is the Official Version.
Hard copies of all signed, official, C-A Operating Procedures are available by contacting the ESSHQ Procedures Coordinator, Bldg. 911A

C-A OPERATIONS PROCEDURES MANUAL

18.4.3 Sweep of ERL Experimental Facility Roof

Hand Processed Changes

HPC No.	Date	Page Nos.	Initials

Approved: ***Signature with Date on File***
Collider-Accelerator Department Chairman Date

D. Phillips

18.4.3 Sweep of ERL Experimental Facility Roof

1. **Purpose**

To provide CAS, RCT, and Experimenter personnel with instructions to sweep the roof area over the ERL experimental facility.

2. **Responsibilities**

2.1 One person is needed to perform the sweep and only trained CAS, RCT or Experimenter personnel are responsible to sweep the area.

2.2 Trained CAS, RCT & Experimenter personnel are responsible for training other members of their groups in sweeping the area.

3. **Prerequisites**

3.1 The training method requires that personnel read this procedure and walk through the procedure while a sweep is being performed.

3.2 Trained CAS, RCT & Experimenter personnel must also have the ladder training in order to perform the sweep.

4. **Precautions**

4.1 Once up on the roof shielding, personnel must maintain a minimum of six feet from any edge.

5. **Procedures**

5.1 Walk around the perimeter of the experimental structure and remove any portable ladders that may provide access to the roof.

5.2 Enter the upper level of the ERL equipment building (portable building #981) and proceed to the N.W. corner.

5.2.1 Ensure that the metal wiring/chipmunk access panel is installed and secured with the MA-1 padlock

5.3 Access the ERL roof using the roof ladder at the N.E. corner of the Klystron P.S. enclosure:

5.3.1 Proceed to the S.W. corner of the roof shielding via the stairs and ladder.

5.3.2 Begin sweep by traveling back toward the roof ladder, being sure to clear any obscured areas around the ODH exhaust/vent fan.

5.3.3 Exit the roof using the roof ladder and secure ladder with the MA-1 padlock.

6. Documentation

6.1 Include verification of sweep performed on OPM 18.4.1.a, ERL Experimental Area Sweep Checklist.

7. References

None

8. Attachments

None

If you are using a printed copy of this procedure, and not the on-screen version, then you MUST make sure the dates at the bottom of the printed copy and the on-screen version match.
The on-screen version of the Collider-Accelerator Department Procedure is the Official Version.
Hard copies of all signed, official, C-A Operating Procedures are available by contacting the ESSHQ Procedures Coordinator, Bldg. 911A

C-A OPERATIONS PROCEDURES MANUAL

18.4.4 Operation of SVTF (Small Vertical Test Facility) ACS (Access Control System)

Text Pages 2 through 10

Attachment

Hand Processed Changes

HPC No.	Date	Page Nos.	Initials

Approved: _____***Signature on File***_____ _____
Collider-Accelerator Department Chairman Date

S. Xin

18.4.4 Operation of SVTF (Small Vertical Test Facility) ACS (Access Control System)

1. Purpose

1.1 This procedure specifies the actions to be used by SVTF Staff when operating the SVTF Access Control System (ACS).

1.1.1 SVTF Facility Area – This procedure applies to the area within building 912 that houses the Superconducting Radio Frequency experiment.

1.1.2 SVTF Staff Operations/Activities with ACS – The ACS Operations/Activities of SVTF involve changing SVTF ACS operation mode, Entry/Exit of SVTF area; response to an Emergency with Emergency Entry/Exit button; participation in a Sweep exercise.

1.2 Definitions

CD = Critical Devices
CR = RHIC Card Barrier release
DIV A = A Division
DIV B = B Division
Ferrogard = Brand name of the switches installed on SGE1 and SGE2
Magnalock = Barrier Magnetic Lock
NA = No Access
SmartGuard 600 = Brand name of the PLC Used in DIV A
Od KEY = Key in the Trapped Key Station for Sweeping SVTF area
ACS = Access Control System
PanelView Plus 700 = Brand name of the HMI in SVTF ACS
RA = Restricted Access
SensaGuard =Brand name of the switches installed on SGE1 and SGE2
SVTF = Small Vertical Test Facility
SA = Safe State
SGE1 = BLDG. 912 SVTF Facility Blockhouse Lower entry Barrier(s)
SGE2 = BLDG. 912 SVTF Facility Blockhouse Upper Access Barrier(s)
SCDA1 = SVTF ACS A Division Critical Device 1
SCDA2 = SVTF ACS A Division Critical Device 2
SCDB1 = SVTF ACS B Division Critical Device 1

2. Responsibilities

2.1 Operators are designated experimental personnel, physicists or engineers.

3. Prerequisites

3.1 Proper trainings must be completed which include as a minimum Collider-Accelerator Access training, ODH-0 training, use of POM training, RS LOTO training.

3.2 The operators must be familiar with the SVTF Access Control system before operating.

4. Precautions

4.1 The SVTF area is posted Oxygen Deficiency Hazard 0 (ODH 0), with POM required for entry, when Liquid Helium (LHe) is present in cryostat.

4.1.1 ODH 0 training and a Personnel Oxygen Monitor (POM) are required to enter SVTF if LHe is present in cryostat.

4.1.2 Escape Breathing Apparatus (EBA) is not required to enter the SVTF if LHe is present in cryostat since it takes more time to don the SRSAR than to vacate the area.

4.1.3 The switch that controls the lights inside SVTF also controls the ODH exhaust fan. The fan must be on at all time when LHe is in the cryostat when entering SVTF.

4.2 SVTF is posted as High Radiation Area when RF is on due to the presence of X-ray radiation

4.2.1 when power from the RF amplifier located outside of SVTF is applied to experimental apparatus AND

4.2.2 while cryostat is filled with LHe.

4.3 As in other areas of BNL, other hazards may exist in and around the SVTF area which fall outside the scope of the ACS system. It may be necessary to ensure that power supplies/RF transmitters located outside of SVTF, which are not automatically disabled upon entry, are secured before entering enclosure.

4.3.1 Obtain confirmation of whether or not hazardous conditions exist from designated liaison physicist or engineer before entering SVTF.

5 Procedure

5.1 Introduction

5.1.1 The SVTF ACS is a redundant safety system. Division A is an Allen-Bradley Programmable Logic Controller (PLC) system while Division B is an Allen-Bradley Safety Relay system. SVTF ACS also has a PanelView Plus 700 HMI to monitor its status and operation in both Division A and Division B systems.

5.1.2 SVTF Access Modes – There are three Access Modes for SVTF as follows: Safe State (SA), Restricted Access (RA), and No Access (NA).

5.1.2.1 Operation Modes can be changed by using the "H/W RESET (MODE CHANGE)" pushbutton, or Od KEY of SVTF ACS, both on ACS ACCESS CONTROL BOX #6475. Operation mode path changes are from SA to RA, from RA to NA, and all modes may go back to SA. Critical Devices are enabled in No Access mode only.

5.1.3 SVTF ACS subsystems – There are four SVTF safety subsystems as follows; Critical Devices (CDs), Entry/Exit (Gates), Emergency Entry/Exit, and Sweep (Sweep Stations).

5.1.4 SVTF Staff Operations/Activities with ACS – The ACS Operations/Activities of SVTF staff involve Operational mode changes, Entry/Exit of the gates, response to an Emergency situation with Emergency Entry/Exit buttons, and participation in a Sweep exercise.

5.1.5 The SVTF State Table, document number CA6020002 REV A, defines the permissible interactions of the ACS Components, Devices and Subsystems of the SVTF facility, which are implemented by the PLC programs.

5.2 Operations/Activities with SVTF ACS

NORMAL condition of the SVTF ACS is defined as system in RESTRICTED (RA), NO SWEEP, and Od Key trapped

5.2.1 SVTF Staff Operations/Activities involving SVTF ACS operating modes
As previously mentioned, SVTF ACS has three modes, Safe State (SA), Restricted Access (RA) and No Access (NA). There are indicator lights at SGE1 Gate box 6474 for each mode. These indicator lights are mutually exclusive.

If mode changing does not function according to this procedure, contact the Access Controls Group at Ext: 7733. (Note: any PLC hardware/communication faults will change SVTF ACS operation mode from RA or NA into SA, as well as prevent mode changes from SA).

5.2.1.1 SAFE STATE - When the SVTF ACS is initially powered on, the system defaults to Safe State.

- SA is denoted by the amber "SAFE STATE" light ON at SGE1 Gate box 6474, as well as a red "SA" on the HMI main page.
- When in SA, normal gate access to SVTF is prohibited, therefore access utilizing a RHIC card at SGE1 gate is not

allowed. (When placing RHIC card on card reader in SA, card reader indicator will turn green, but will not unlock gate)

- Exit from SVTF while in SA is accomplished by pressing the Touch Sense Bar (TSB) inside gate SGE1.
- All Critical Devices are disabled in SA.

5.2.1.2 RESTRICTED ACCESS

- RA is denoted by the green "RESTRICTED ACCESS" light ON at SGE1 Gate box 6474, as well as a green "RA" on the HMI main page.
- When in RA, normal gate access to SVTF is allowed by placing a RHIC card on SGE1 gate card reader.
- Exit from SVTF while in RA is accomplished by pressing the Touch Sense Bar (TSB) inside gate SGE1.
- All Critical Devices are disabled in RA.
- RA is the only mode in which a SWEEP can be performed.

5.2.1.3 NO ACCESS

- NA is denoted by the red "NO ACCESS" light ON at SGE1 Gate box 6474, as well as a violet "NA" on the HMI main page.
- When in NA, normal gate access to SVTF is prohibited. Therefore, access utilizing a RHIC card at SGE1 gate is not allowed. (When placing RHIC card on card reader in NA, card reader indicator will turn green, but will not unlock gate)
- Exit from SVTF while in NA is accomplished by pressing the Touch Sense Bar (TSB) inside gate SGE1. In this case, the mode will drop from NA to SA and sweep will be lost.
- SVTF Critical Devices, and therefore Radiation Hazards, are ENABLED when the SVTF ACS is in NO ACCESS mode.

5.2.2 SVTF Staff Operations / Activities involving Sweep Operations

SVTF can be swept in RA mode only; the only valid sweep operation is conducted by Authorized personnel and consists of activating the two Check Stations in a designated sequence in accordance with Sweep Procedure C-A TPL 11-20. The Check Stations are activated with the Od Key.

5.2.2.1 Overview of SVTF area sweep (NOT an official sweep procedure)

1. Turn power switch to Critical Devices OFF at box 6482 and apply LOTO to the switch.
2. SVTF must be in RA mode
3. Gate SGE1 must be closed and locked
4. Remove Od Sweep Key from Trapped Key switch on front panel of SVTF ACCESS CONTROL BOX 6475

5. Turn on light switch right of SGE1 (also turns on ODH fan)
6. Set CS1 inside SVTF area
7. Exit SVTF area and close SGE1 gate (SGE1 gate must be closed in order to set CS2)
8. At SGE1 Gate box 6474, set CS2 (CS2 must be set no longer than 45 seconds after setting CS1)
9. Ensure amber "AREA SECURED" and green "RESTRICTED ACCESS" indicator lights are ON
10. Sweep is complete.
11. Return Od Sweep Key to Trapped Key switch on front panel of SVTF ACCESS CONTROL box 6475.

CAUTION: Trapping the Od key at this time will change mode to NA and enable Critical Devices.

5.2.2.2 The SVTF ACS contains no mechanism for preserving sweep during an entry/exit in any mode. Upon opening SGE1 the SVTF sweep WILL be dropped.

5.2.3 <u>SVTF Staff Operations/Activities involving Emergency Entry/Exit</u>

5.2.3.1 Emergency Entry / Exit push buttons

- The Emergency Entry / Exit push buttons located outside and inside gate SGE1 are to be used for emergency situations ONLY (Refer to Attachment 8.1). Emergency entry to or exit from SVTF while in any mode is accomplished by pressing the Emergency Entry or Exit button, either of which will unlock gate SGE1. The Emergency Entry / Exit pushbutton must be reset after use.
- In SA, pressing either of the Emergency Entry / Exit push buttons will unlock SGE1. The "SAFE STATE" light at SGE1 Gate box 6474 will remain ON and a red "E. Crash Activated" will show up on the HMI MAIN page.
- In RA without sweep, pressing either of the Emergency Entry / Exit push buttons will unlock SGE1. The "RESTRICTED ACCESS" light at SGE1 Gate box 6474 will remain ON and a red "E. Crash Activated" will show up on the HMI MAIN page.
- In RA with sweep, pressing either of the Emergency Entry / Exit push buttons will unlock SGE1 and cause SVTF mode to change to SA. The "SAFE STATE" and "AREA SECURED" lights at SGE1 Gate box 6474 will be ON and a red "E. Crash Activated" will show up on the HMI MAIN page. Sweep will be retained unless SGE1 is opened. If sweep is not lost, pressing H/W RESET (MODE CHANGE) pushbutton will return mode to RA after the Emergency Entry / Exit push button has been reset.

- In NA, as well as during the process of going into NA (Hazard Imminent alarm sounding), pressing either of the Emergency Entry / Exit push buttons will
  a) Cause SVTF mode to change to SA, which shall disable all Critical Devices
  b) Unlock SGE1
  c) Drop the sweep

  The "SAFE STATE" light at SGE1 Gate box 6474 will be ON and a red "E. Crash Activated" will show up on the HMI MAIN page.

5.2.3.2 After use, the Emergency Entry / Exit push buttons must be physically reset. To do so, turn the button clockwise and pull out. This will clear the red "E. Crash Activated" from the HMI MAIN page.

5.2.4 <u>SVTF Staff Operations / Activities involving Operation Mode changes</u>

5.2.4.1 <u>To change mode from **SA** (NO SWEEP) **to RA**</u>, press the "H/W RESET (MODE CHANGE)" pushbutton on the front panel of SVTF Access Control box 6475. This mode change is valid regardless of the Od Key position (trapped or released).

"RESTRICTED ACCESS" light at SGE1 Gate box 6474 is ON

5.2.4.2 Changing from **SA** (SWEEP OK) **to RA** with Od Key already in the trapped position is invalid. First release the Od key, then proceed per step 5.2.5.1 above.

5.2.4.3 It is not possible to change mode directly from SA to NA, regardless of sweep status or Od Key position.

5.2.4.4 <u>To change mode from **RA to NA**</u>, the SVTF area must have a valid sweep and the Od Key TRAPPED KEY switch MUST BE IN THE RELEASED position.

With a valid sweep present, the "AREA SECURED" light at SGE1 Gate box 6474 will be ON.

Turning the Od Key CW in TRAPPED KEY switch on front panel of SVTF ACCESS CONTROL BOX 6475 will change SVTF mode from RA to NA.

- The red "NO ACCESS" light at SGE1 Gate box 6474 will be ON
- The Hazard Imminent alarm will be heard outside SVTF area for 45 seconds

After 45 seconds

- Critical Device indicators “SCDA1 POWER, SCDA2 POWER, SCDB1 POWER” at enclosure 6480 are ON (Critical Devices are enabled)
- The red “HAZARD WARNING” light at SGE1 Gate box 6474 is ON
- Hazard Imminent alarm is OFF

Overview to change mode from RA to NA

1. SVTF in RA
2. SWEEP OK
3. Turn Od Key ¼ turn CW to trap key
4. At SGE1 Gate box 6474, verify red “NO ACCESS” and amber “AREA SECURED” lights are ON.
5. Verify HAZARD IMMINENT alarm sounds for 45 seconds
6. After 45 seconds,
   a) SVTF Critical Device indicators at SVTF CRITICAL DEVICE box 6480 are ON
   b) “HAZARD WARNING” light at SGE1 Gate box 6474 is ON
   c) Hazard Imminent alarm is OFF

5.2.4.5 It is not possible to change mode directly from NA to RA

5.2.4.6 <u>To change mode from **NA to SA**</u>, release (un-trap) Od Key from the TRAPPED KEY switch by placing a valid HID iCLASS 2K TAG on the TRAPPED KEY REMOVAL RFID reader at SVTF ACCESS CONTROL BOX 6475. When the Od Key is released, the mode changes to SA.

- Critical devices are OFF
- Critical devices indicators SCDA1 POWER, SCDA2 POWER, SCDB1 POWER at SVTF CRITICAL DEVICE box 6480 are OFF
- “HAZARD WARNING” light at SGE1 Gate box 6474 is OFF
- “SAFE STATE” light at SGE1 Gate box 6474 is ON
- Sweep is retained unless gate SGE1 is opened
- “AREA SECURED” light at SGE1 Gate box 6474 is ON

5.2.4.7 <u>Possible mode changes based upon Od Key position</u>

1. With Od Key Trapped
   a) SA (no sweep) to RA – valid; press “H/W RESET (MODE CHANGE)”
   b) SA (sweep OK) to RA – invalid; release trapped key, press “H/W RESET (MODE CHANGE)”
   c) NA to SA – valid; release (un-trap) trapped key

2. With Od Key released (not trapped)
   a) SA (with or without sweep) to RA – valid; press "H/W RESET (MODE CHANGE)"
   b) RA to NA – turn Od key CW to trap key (must have SWEEP OK)

5.2.4.8 End of Experimental Operations - When the SVTF experimental area is not in use, there are three possible operational configurations in which to leave the SVTF ACS, with the Od Key trapped, to prevent loss or theft.

1. NA (Critical Devices are enabled), the SVTF facility shall not be left unsupervised in NA.

2. RA with NO SWEEP (Critical Devices are disabled, SGE1 is locked, entry requires RHIC card; recommended)
   a) From NA, release Trapped Key
   b) Mode changes to SA, SWEEP OK
   c) Press "H/W RESET (MODE CHANGE)" button to go to RA
   d) Swipe RHIC card on card reader to unlock SGE1
   e) Open SGE1 to drop sweep
   f) Trap Od Key in TRAPPED KEY switch

3. SA with SWEEP OK (Critical Devices are disabled, SGE1 locked, accessible only by Emergency Entry or mode change, sweep retained; not recommended - consult with physicist. See 5.2.4.6 above)
   a) From NA, release Trapped Key
   b) Mode changes to SA, SWEEP OK
   c) Trap Key in keyswitch

5.2.5 <u>SVTF Staff Operations/Activities with Critical Devices</u>

Critical Devices are enabled only in No Access mode

- To enable Critical Devices, place SVTF ACS in NA mode per step 5.2.4.4. (change mode from RA to NA)

Critical Devices are disabled in Safe State and Restricted Access modes

- To disable Critical Devices, place SVTF ACS in SA mode per step 5.2.4.6. (change mode from NA to SA)
- To disable Critical Devices in an emergency situation, press Emergency Entry or Exit button.

5.2.6 SVTF Staff Operations/Activities at the HMI

SVTF HMI is only for monitoring purposes. Most of the HMI pages are for testing and troubleshooting by C-AD ACG personnel. Status of Operation mode, Sweep, Hazard, Od Key, Critical Devices, and Faults can be seen at a glance.

6 Documentation

None

7 References

7.1 C-A TPL 11-20, Securing Little Block House for Experimental Tests.

7.2 CA6020002, Access Control System State Tables for SVTF Facility Blockhouse located at Building 912.

7.3 C-A-OPM 2.36, Lock and Tag Program for Control of Hazardous Energy.

7.4 C-A-OPM 9.1.16, Lockout/Tagout for Radiation Safety (RS LOTO).

8 Attachments

8.1 SVTF ACS System Description

Attachment 8.1

SVTF ACS System Description

1. SVTF Facility Area

   The SVTF Facility Area, also called SVTF Blockhouse, is where the Superconducting Radio Frequency experiment will be conducted. It is a single point entry/exit blockhouse. The single point entry/exit consists of two barriers: the lower entry barrier is called SGE1, the upper entry barrier SGE2. SGE2 and SGE1 right side (when facing SGE1 from outside of the blockhouse) are locked by mechanical latch in normal operation. SGE1 left side (when facing SGE1 from outside of the blockhouse) is locked by Magnalock which is installed on SGE1 left side.

2. The SVTF ACS

   The SVTF ACS consists of 2 independent safety systems, “A” Division and “B” Division. “A” Division is controlled by Allen-Bradley PLC SmartGuard 600; “B” Division is controlled by Allen-Bradley Safety Relays. “A” Division is located in SVTF “A” Division Enclosure 6476 on the wall outside the SVTF blockhouse. “B” Division is located in SVTF “B” Division Enclosure 6477 mounted immediately below “A” Division Enclosure 6476. In “A” Division, a SmartGuard 600 PLC communicates with the other three I/O modules that monitor and activate the various SVTF Components, Devices and Subsystems. The SmartGuad 600 runs the program which is written in accordance with the SVTF state table. The SVTF ACS also consists of its Human-Machine Interface (HMI) to monitor its operation status and PLC, I/O modules, and safety relays status. This HMI is only for monitoring.

3. SVTF Access Modes

   3.1 Safe State (SA) Mode is indicated by an amber Safe State light on SVTF Enclosure 6474 and SA mode indicator on HMI Main Screen for Operation page. Safe State (SA) Mode does not allow entry into barrier SGE1 by the RHIC Card Barrier release (CR). Safe State is the first operation mode after SVTF ACS is started and is also the state entered into when a fault is detected in the SVTF ACS’s hardware, such as SGE1 and SGE2 switches, PLC, I/O modules, and so on. In SA mode, the 3 critical devices of SVTF are disabled. Safe State mode can be changed to Restricted Access Mode by pushing the H/W RESET (MODE CHANGE) pushbutton, which is on ACS box 6475.

   3.2 Restricted Access (RA) Mode is indicated by a green Restricted Access light on SVTF Enclosure 6474 and RA mode indicator on HMI Main Screen for Operation page. RA Mode is the only mode which allows SVTF staff to enter the SVTF blockhouse using CR. The sweep function may be activated only in Restricted Access mode. Authorized SVTF staff sweep SVTF blockhouse using the Od key which shall be trapped in the Trapped Key switch when not in use. Attempting to

sweep SVTF with a duplicate Od Key while the authorized key is trapped will drop SVTF from RA to SA.

When the SVTF facility area is successfully swept, the SVTF ACS is ready to go to No Access Mode by trapping the Od key in the Trapped Key switch, which is on ACS box 6475.

3.3 No Access (NA) Mode is indicated by a red No Access light on SVTF Enclosure 6474 and NA mode indicator on HMI Main Screen for Operation page. In No Access Mode, the radiation hazard is enabled in SVTF blockhouse and is indicated by a red Hazard Warning light on SVTF Enclosure 6474; no personnel are allowed to enter into SVTF blockhouse because the critical devices of SVTF ACS are enabled. Opening SGE1 or SGE2, or pushing the Emergency Entry button will change SVTF ACS operation mode from No Access to Safe State.

4. SVTF ACS Subsystems

4.1 Critical Devices (CDs) Subsystem

The critical devices (CDs) are safety rated contactors used in the normal operations of SVTF, and if disabled, will shutdown the power to the radiation producing power supplies and associated devices. The CDs are SCDA1, SCDA2 and SCDB1, each with their own indicator light indicating when the contactors are enabled. They are located in SVTF Enclosure 6480.

The DIV A CDs consists of two contactors, SCDA1 and SCDA2, which are exclusively controlled by DIV A PLC. The DIV B CD consists of one contactor, SCDB1, which is exclusively controlled by DIV B safety relays. They are all enabled ONLY in No Access Mode. In Safe State and Restricted Access modes, they are disabled.

4.2 The Entry/Exit Subsystem

The Entry/Exit Subsystem consists of 2 gates, SGE1 and SGE2. SGE1 is the lower entry barrier while SGE2 is the upper entry barrier at the single entry/exit point of the SVTF facilities area. Status of the gates is recorded by one SensaGuard switch and two Ferrogard switches installed on each gate. Electrical wiring and components for the gates are housed in SVTF Enclosure 6473. SGE1 left side can be opened by CR and locked by the magnetic lock installed on SGE1 left side. In normal operation, SGE1 and SGE2 are locked. CR Access is allowed in Restricted Access mode.

4.3 The Emergency Subsystem

The Emergency Subsystem consists of 2 operators, Emergency Entry Pushbutton and Emergency Exit Pushbutton, whose purpose is to unlock SGE1 in case emergency entry is required by Fire/rescue personnel or egress is required in the unlikely event of normal exit mechanism failure. In NA mode, pushing either emergency entry or exit

operator unlocks the door and also changes SVTF mode from NA to SA. In Restricted Access mode and without sweep, the only resulting action will be that SGE1 will unlock. But In RA and SVTF facility area swept, pushing the Emergency Entry pushbutton will drop SVTF ACS to SA and disable the sweep.

4.4 The Sweep Subsystem

The SVTF ACS Sweep Subsystem consists of 2 sweep stations. Sweep Station CS1 in SVTF Enclosure 6481 is located in the SVTF blockhouse. Sweep Station CS2 in SVTF Enclosure 6474 is located outside the SVTF blockhouse. The sweep function is activated ONLY in Restricted Access mode. A valid sweep is performed by using the Od key which is normally trapped in the Trapped Key switch. This Od key is released by activating the associated HID card reader with a valid HID iCLASS 2K TAG. Using any other Od key rather than the authorized Od key which is trapped in Trapped Key switch for sweep is invalid, and will drop SVTF ACS into Safe State mode.

If you are using a printed copy of this procedure, and not the on-screen version, then you MUST make sure the dates at the bottom of the printed copy and the on-screen version match.
The on-screen version of the Collider-Accelerator Department Procedure is the Official Version.
Hard copies of all signed, official, C-A Operating Procedures are available by contacting the ESSHQ Procedures Coordinator, Bldg. 911A

C-A OPERATIONS PROCEDURES MANUAL

ATTACHMENT

18.4.4.a Small Vertical Test Facility (SVTF) Sweep Checklist

C-A OPM Procedures in which this Attachment is used.		
4.56		
18.4.4		

Hand Processed Changes

HPC No.	Date	Page Nos.	Initials

Approved: ***Signature with Date on File***
Collider-Accelerator Department Chairman Date

C. Naylor

18.4.4.a Small Vertical Test Facility (SVTF) Sweep Checklist

(Designated experimenter/CAS):

Time: Date:

Warning:
Little Block House (LBH) should be void of personnel once sweep is complete.

Prerequisites

- One person to perform sweep (Designated experimenter/CAS).
- C-A TPL 11-20 ATT 8.1 "Little Block House Sweep Checklist".
- TLD, SRD, Flashlight, POM [if Liquid Helium (LHe) is present in cryostat].
- Enable that allows RF amplifier to apply power to experimental apparatus inside LBH removed.
- LBH set to RESTRICTED ACCESS (R/A) mode before entering enclosure.
- Operation of ODH exhaust fan (if LHe is present in cryostat).

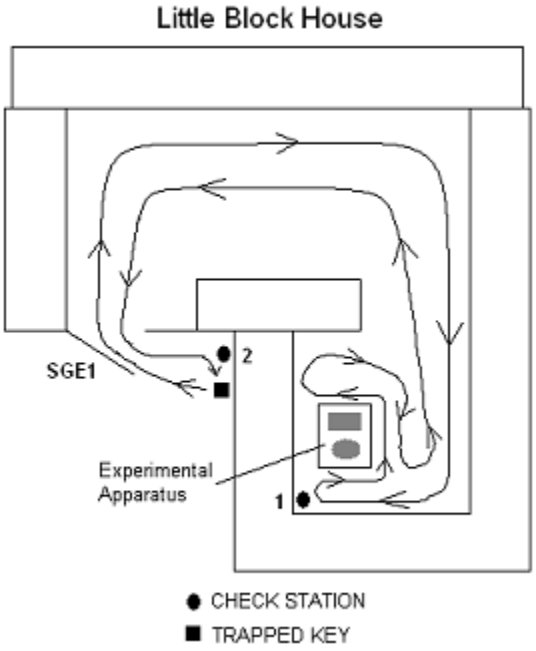

Check

____1. Confirm whether or not LHe is present in cryostat.

> **Warning:**
> If the HAZARD WARNING indicator (ACS box 6474) and the SRF CRITICAL DEVICE indicators (SCDA1 POWER, SCDA2 POWER, SCDB1 POWER) are lit (ACS box 6480), then the enable is present that allows power from the RF amplifier to be applied to the experimental apparatus inside the LBH.

____2. Scan RF-ID to retrieve Od key from TRAPPED KEY key switch (ACS box 6475),
___swipe RF-ID over HID reader (light on reader should turn from red to green),
___un-capture key by turning key counterclockwise (CCW) from horizontal (KEY TRAPPED) position to vertical (KEY FREE) position,
___remove key from key switch.

> **Note:**
> If the HAZARD WARNING indicator (ACS box 6474) and the SRF CRITICAL DEVICE indicators (SCDA1 POWER, SCDA2 POWER, SCDB1 POWER) are lit (ACS box 6480), then the indicators will go out when the Od key is un-captured thereby removing the enable for the RF amplifier to apply power to the experimental apparatus inside the LBH.

____3. Ensure enable is removed that allows RF amplifier to apply power to experimental apparatus inside LBH,
___verify HAZARD WARNING indicator is out (ACS box 6474),
___verify SRF CRITICAL DEVICE indicators (SCDA1 POWER, SCDA2 POWER, SCDB1 POWER) are out (ACS box 6480).

> **Note:**
> If LBH is in NO ACCESS (N/A) mode, then enclosure switches to SAFE STATE (S/S) mode when Od key is un-captured (ACS box 6474).

____4. Ensure LBH is set to R/A (ACS box 6474).
___IF LBH is in S/S after retrieving Od key, THEN set enclosure to R/A by pressing H/W RESET – MODE CHANGE button (ACS box 6475).
___Observe R/A light is lit (ACS box 6474).

____5. Turn on lights/fan with CONTROLS CONTACTOR switch at right side of door SGE1.

____6. Ensure ODH exhaust fan is running by listening for operation before entering LBH if LHe is present in cryostat.

____7. Enter LBH through SGE1 using RHIC (Blue/Pink) access card with card reader to right of door (ACS box 6474).

____8. Make announcement that all personnel must leave the enclosure.

> **Warning:**
> Personnel found in the LBH during the sweep must leave with the individual performing the sweep.

____ 9. Sweep to the right along labyrinth to area containing apparatus.
____10. Search area for personnel checking in and around any apparatus.

> **Note:**
> If sweep is not completed within 45 seconds of setting first check station, then sweep must be restarted.

____11. Set first check station (CS1) at far corner of area (ACS box 6841),
___insert Od key in key switch,
___turn key clockwise (CW) and then counterclockwise (CCW), from **0** (OFF) position to **1** (ON) position back to **0** (OFF) position,
___observe SWEEP STATUS light turn on then turn off,
___remove Od key from key switch.
____12. Sweep back through labyrinth to SGE1.
____13. Exit LBH through SGE1 and turn off lights/fan.
____14. Set second check station (SWEEP CHECK STATION #2) to right of SGE1 (ACS box 6474),
___insert Od key in key switch,
___turn key CW and then CCW, from **0** (OFF) position to **1** (ON) position back to **0** (OFF) position,
___observe AREA SECURED light turns on and stays lit (ACS box 6474),
___remove Od key from key switch.
____15. Capture Od key in TRAPPED KEY key switch (ACS box 6475),
___insert key in key switch,
___turn key CW from vertical (KEY FREE) position to horizontal (KEY TRAPPED) position,
___observe R/A light goes out and N/A light turns on and stays lit (ACS box 6474),
___hear BEAM IMMINENT alarm sound for 45 second.
____16. Observe and listen for the following after 45 seconds,
___HAZARD WARNING light turns on and stays lit (ACS box 6474),
___SRF CRITICAL DEVICE indicators (SCDA1 POWER, SCDA2 POWER, SCDB1 POWER) turn on and stay lit (ACS box 6480),
___BEAM IMMINENT alarm stops.
____17. Notify experimental personnel that sweep is complete.
____18. File completed checklist in “Completed Little Block House Sweep Checklist Binder”.

If you are using a printed copy of this procedure, and not the on-screen version, then you MUST make sure the dates at the bottom of the printed copy and the on-screen version match.
The on-screen version of the Collider-Accelerator Department Procedure is the Official Version.
Hard copies of all signed, official, C-A Operating Procedures are available by contacting the ESSHQ Procedures Coordinator, Bldg. 911A

C-A OPERATIONS PROCEDURES MANUAL

18.4.5 Operation of VTF (Vertical Test Facility) ACS (Access Control System)

Text Pages 2 through 12

Attachment

Hand Processed Changes

HPC No.	Date	Page Nos.	Initials

Approved: _____***Signature on File***_____ _____
Collider-Accelerator Department Chairman Date

S. Xin

18.4.5 Operation of VTF (Vertical Test Facility) ACS (Access Control System)

1. Purpose

1.1 This procedure specifies the actions to be used by VTF Staff when operating the VTF Access Control System (ACS).

1.1.1 VTF Facility Area – This procedure applies to the VTF within building 912.

1.1.2 VTF Staff Operations/Activities with ACS – The ACS Operations/Activities of VTF involve changing VTF ACS operational mode, Entry/Exit of VTF area; response to an Emergency with Emergency Entry/Exit buttons; participation in a Sweep exercise.

1.2 Definitions

CD =	Critical Devices
CR =	RHIC Card Barrier release
DIV A =	A Division
DIV B =	B Division
HMI =	Human Machine Interface
Ferrogard =	Brand name of the switches installed on VGE1 and VRRE
Magnalock =	VGE1 Barrier Magnetic Lock
NA =	No Access
SmartGuard 600 =	Brand name of the PLC Used in DIV A
Ab KEY =	Key in the Trapped Key Station for Sweeping VTF area
ACS =	Access Control System
PanelView Plus 700 =	Brand name of the HMI in VTF ACS
RA =	Restricted Access
SensaGuard =	Brand name of the switches installed on VGE1 and VRRE
VTF =	Vertical Test Facility
SA =	Safe Access
VGE1 =	BLDG. 912 VTF Facility Main Entry Gate
VRRE =	BLDG. 912 VTF Facility Retractable Roof Entry
VLE1 =	VTF Experiment Access Ladder Entry
VCD1A1, VCD1A2 =	VTF ACS A Division Critical Devices for RF#1
VCD2A1, VCD2A2 =	VTF ACS A Division Critical Devices for RF#2
VCD1B =	VTF ACS B Division Critical Devices for RF#1
VCD2B =	VTF ACS B Division Critical Devices for RF#2

2. Responsibilities

2.1 Operators are designated experimental personnel, physicists or engineers.

3. Prerequisites

3.1 Proper training must be completed which include as a minimum Collider-Accelerator Access training, ODH-1 training, RS LOTO training.

3.2 The operators must be familiar with the VTF Access Control system before operating.

3.3 The operators must be qualified to operate the VTF Roof Motion control box.

4. Precautions

4.1 The VTF area is posted Oxygen Deficiency Hazard 1 (ODH 1) when Cryogens are present in cryostat.

4.1.1 ODH 1 training and a Personnel Oxygen Monitor (POM) are required to enter VTF if Cryogens are present in cryostat.

4.1.2 Escape Breathing Apparatus (EBA) is not required to enter the VTF if Cryogens are present in cryostat since it takes more time to don the EBA than to vacate the area.

4.2 VTF is posted as High Radiation Area when RF is on due to the presence of X-ray radiation when

1) power from the RF amplifier located outside of VTF is applied to experimental apparatus AND
2) cryostat is filled with Cryogens .

4.3 As in other areas of BNL, other hazards may exist in and around the VTF area which fall outside the scope of the ACS system. It may be necessary to ensure that power supplies/RF transmitters located outside of VTF, which are not automatically disabled upon entry, are secured before entering enclosure.

4.3.1 Obtain confirmation of whether or not hazardous conditions exist from designated liaison physicist or engineer before entering VTF.

5. Procedure

5.1 Introduction

5.1.1 The VTF ACS is a redundant safety system. Division A is an Allen-Bradley Programmable Logic Controller (PLC) system while Division B is an Allen-Bradley Safety Relay system. VTF ACS also has a PanelView Plus 700 HMI to monitor its status and operation in both Division A and Division B systems.

5.1.2 VTF Access Modes – There are three Access Modes for VTF ACS as follows: Safe Access (SA), Restricted Access (RA), and No Access (NA).

5.1.2.1 Operation Modes can be changed by using the "H/W RESET" pushbutton, or Ab KEY of VTF ACS, both on ACS ACCESS CONTROL BOX #6500. Operation mode path changes are from SA to RA, from RA to NA, and all modes back to SA. Critical Devices are enabled in No Access mode only.

5.1.3 VTF ACS subsystems – There are six VTF safety subsystems as follows;
1. Critical Devices (CDs)
2. Entry/Exit (Gate and Roof)
3. Emergency Entry/Exit
4. Sweep (Sweep Stations)
5. Radiation Monitors (Chipmunks)
6. Oxygen Deficiency Hazard (ODH).

5.1.4 VTF Staff Operations/Activities with ACS – The ACS Operations/Activities of VTF staff involve
1. Operational mode changes
2. Entry/Exit of the gate and roof
3. Response to an Emergency situation with Emergency Entry/Exit buttons
4. Participation in a Sweep
5. Response to an ODH Alarm
6. Response to a Radiation Alarm

5.1.5 The VTF State Table, document number CA6030001 is the specification of interactions for the ACS Components, Devices and Subsystems of the VTF facility, which are implemented by the PLC programs and relay systems.

5.2 Operations/Activities with VTF ACS

NORMAL condition of the VTF ACS is defined as system in RESTRICTED (RA), NO SWEEP, and Ab Key trapped

5.2.1 VTF Staff Operations/Activities involving VTF ACS operating modes

VTF ACS has three modes, Safe Access (SA), Restricted Access (RA) and No Access (NA). There are indicator lights at VGE1 Gate box 6498 for each mode. These indicator lights are mutually exclusive.

Note:
If mode changing does not function according to this procedure, contact the Access Controls Group at Ext: 7733. (Note: any PLC hardware/communication faults will change VTF ACS operation mode from RA or NA into SA, as well as prevent mode changes from

5.2.1.1 SAFE ACCESS - When the VTF ACS is initially powered on,

- the system defaults to Safe Access.
- SA is denoted by the amber "SAFE ACCESS" light ON at VGE1 Gate box 6498, as well as a red "SA" on the HMI VTF ACS SYS MAIN PAGE.
- HMI VTF ACS SYS MAIN PAGE indicates NMO 179 and NMO 180 are RAD and FAIL
- When in SA, normal gate access to VTF is prohibited, therefore access utilizing a RHIC card at VGE1 gate is not allowed. (When placing RHIC card on card reader in SA, card reader indicator will turn green, but will not unlock gate)
- Exit from VTF while in SA is accomplished by pressing the Touch Sense Bar (TSB) inside gate VGE1.
- All Critical Devices are disabled in SA.

5.2.1.2 RESTRICTED ACCESS

- RA is denoted by the green "RESTRICTED ACCESS" light ON at VGE1 Gate box 6498, as well as a green "RA" on the HMI VTF ACS SYS MAIN PAGE.
- When in RA, normal gate access to VTF is allowed by placing a RHIC card on VGE1 gate card reader.
- Exit from VTF while in RA is accomplished by pressing the Touch Sense Bar (TSB) inside gate VGE1.
- All Critical Devices are disabled in RA.
- RA is the only mode in which a SWEEP can be performed.

5.2.1.3 NO ACCESS

- NA is denoted by the red "NO ACCESS" light ON at VGE1 Gate box 6498, as well as a violet "NA" on the HMI VTF ACS SYS MAIN PAGE.
- When in NA, normal gate access to VTF is prohibited. Access utilizing a RHIC card at VGE1 gate is not allowed. (When placing RHIC card on card reader in NA, card reader indicator will turn green, but will not unlock gate)
- Exit from VTF while in NA is accomplished by pressing the Touch Sense Bar (TSB) inside gate VGE1. The mode will drop from NA to SA and sweep will be lost.
- VTF Critical Devices are ENABLED when the VTF ACS is in NO ACCESS mode, therefore Radiation Hazards may exist in NA mode.

5.2.2 VTF Staff Operations / Activities involving Sweep Operations

VTF can be swept in RA mode only; the only valid sweep operation is conducted by Authorized personnel and consists of activating the two Check Stations in a designated sequence in accordance with Sweep Procedure C-A

TPL 12-11 Securing Vertical Test Facility (VTF) for Experimental Tests. The Check Stations are activated with the Ab Key.

5.2.2.1 Overview of VTF area sweep (NOT an official sweep procedure)

1. Turn power switch to Critical Devices OFF at switch 6508 and apply LOTO to the switch (Optional).
2. VTF must be in RA mode
3. Gate VGE1 must be closed and locked
4. Roof VRRE must be open.
5. Remove Ab Sweep Key from Trapped Key switch on front panel of VTF ACCESS CONTROL BOX 6500
6. Set CS1 inside VTF experimental area, which will start the 20 minutes sweep timeout timer and a 1200 seconds count-down timer will show on HMI VTF ACS SYS MAIN PAGE.
7. Exit VTF experimental area and stop at top of the VTF stairs
8. Lift the folding staircase which leads to the experiment area and latch it
9. Exit and close VGE1 gate (VGE1 gate must be closed in order to set CS2)
10. At VGE1 Gate box 6498, set CS2
11. At Roof Motion Control box 6412, close the roof within the overall 20 minutes sweep timeout
12. Walk around VTF building in clockwise direction to inspect whether people are climbing VTF
13. Ensure amber "AREA SECURED" and green "RESTRICTED ACCESS" indicator lights are ON at VGE1 Gate box 6498
14. Sweep is complete.
15. Once the sweep is complete, the 20 minutes timer will be reset and the 1200 seconds count-down timer will disappear on HMI VTF ACS SYS MAIN PAGE.
16. Return Ab Sweep Key to Trapped Key switch on front panel of VTF ACCESS CONTROL box 6500.

<u>CAUTION:</u>
Trapping the Ab key at this time will change mode to NA and enable the Critical Devices.

5.2.2.2 The VTF ACS contains no mechanism for preserving sweep during an entry/exit in any mode. Upon opening VGE1 or VRRE the VTF sweep WILL be dropped.

5.2.2.3 Once an Authorized (full) VTF Sweep has been completed, it is possible to retain a partial sweep of VTF if VGE1 gate is opened, under the condition that <u>VRRE Roof has NOT been opened</u>. In such a case, if VGE1 is opened (causing loss of sweep) while VRRE has remained closed, a partial sweep will have been maintained; in other words, Check Station CS1 in the experimental area is still SET. In

order to return to a fully swept state (SWEEP OK), only Check Station CS2 at enclosure 6498 needs to be reset. In all cases, opening VRRE roof will result in a complete loss of sweep.

5.2.3 VTF Staff Operations/Activities involving Emergency Entry/Exit

5.2.3.1 Emergency Entry / Exit push buttons

- The Emergency Entry / Exit push buttons located outside and inside gate VGE1 are to be used for emergency situations ONLY (Refer to Attachment 8.1). Emergency entry to or exit from VTF while in any mode is accomplished by pressing the Emergency Entry or Exit button, either of which will unlock gate VGE1. The Emergency Entry / Exit pushbutton must be reset after use.
- In SA, pressing either of the Emergency Entry / Exit push buttons will unlock VGE1. The "SAFE ACCESS" light at VGE1 Gate box 6498 will remain ON and a red "E. Crash Activated" will be displayed on the HMI VTF ACS SYS MAIN PAGE.
- In RA without sweep, pressing either of the Emergency Entry / Exit push buttons will unlock VGE1. The "RESTRICTED ACCESS" light at VGE1 Gate box 6498 will remain ON and a red "E. Crash Activated" will show up on the HMI VTF ACS SYS MAIN PAGE.
- In RA with sweep, pressing either of the Emergency Entry/ Exit push buttons will unlock VGE1 and cause VTF mode to change to SA. The "SAFE ACCESS" and "AREA SECURED" lights at VGE1 Gate box 6498 will be ON and a red "E. Crash Activated" will be displayed on the HMI VTF ACS SYS MAIN PAGE. Sweep will be retained unless VGE1 is opened. If sweep is not lost, pressing H/W RESET pushbutton will return mode to RA after the Emergency Entry / Exit push button has been reset.
- In NA, as well as during the process of going into NA (Hazard Imminent alarm sounding), pressing either of the Emergency Entry / Exit push buttons will
  a) Cause VTF mode to change to SA, which shall disable all Critical Devices
  b) Unlock VGE1
  c) Cause a partial loss of sweep

  The "SAFE ACCESS" light at VGE1 Gate box 6498 will be ON and a red "E. Crash Activated" will be displayed on the HMI VTF ACS SYS MAIN PAGE.

5.2.3.2 After use, the Emergency Entry / Exit push buttons must be physically reset. To do so, turn the button clockwise and pull out. This will clear the red "E. Crash Activated" from the HMI VTF ACS SYS

MAIN PAGE. Press the “H/W RESET” button at enclosure 6500 to continue.

5.2.4 VTF Staff Operations / Activities involving Operation Mode changes

5.2.4.1 To change mode from SA (Initial Power-up / sweep status NO SWEEP) to RA, press the RAD TRIP RESET pushbutton first, then press the H/W RESET pushbutton on the front panel of VTF Access Control box 6500. This mode change is valid regardless of the Ab Key position (trapped or released). “RESTRICTED ACCESS” light at VGE1 Gate box 6498 is ON

5.2.4.2 Changing from **SA** (SWEEP OK) **to RA** with Ab Key already in the trapped position is invalid. First release the Ab key, then proceed per step 5.2.4.1 above.

5.2.4.3 It is not possible to change mode directly from SA to NA, regardless of sweep status or Ab Key position.

5.2.4.4 To change mode from **RA to NA**, the VTF area must have a valid sweep and the Ab Key TRAPPED KEY switch MUST BE IN THE RELEASED position.

With a valid sweep present, the “AREA SECURED” light at VGE1 Gate box 6498 will be ON. Trapping the Ab Key CW in TRAPPED KEY switch on front panel of VTF ACCESS CONTROL BOX 6500 will change VTF mode from RA to NA.

- The red “NO ACCESS” light at VGE1 Gate box 6498 will be ON
- The Hazard Imminent alarm will be heard outside VTF area for 30 seconds
  After 30 seconds;
- Critical Device VCD1A1, VCD1A2, VCD1B, VCD2A1, VCD2A2, and VCD2B indicator lights at enclosure 6504 are ON (Critical Devices are enabled)
- The red “HAZARD WARNING” light at VGE1 Gate box 6498 is ON
- Hazard Imminent alarm is OFF

Overview to change mode from RA to NA

1. VTF in RA
2. SWEEP OK
3. Turn Ab Key ¼ turn CW to trap key
4. At VGE1 Gate box 6498, verify red “NO ACCESS” and amber “AREA SECURED” lights are ON.
5. Verify HAZARD IMMINENT alarm sounds for 30 seconds
6. After 30 seconds,

a) VTF Critical Device VCD1A1, VCD1A2, VCD1B, VCD2A1, VCD2A2, and VCD2B indicator lights at VTF CRITICAL DEVICE box 6504 are ON
b) "HAZARD WARNING" light at VGE1 Gate box 6498 is ON
c) Hazard Imminent alarm is OFF

5.2.4.5 It is not possible to change mode directly from NA to RA

5.2.4.6 To change mode from **NA to SA**, release (un-trap) Ab Key from the TRAPPED ACCESS KEY switch by placing a valid HID iCLASS 2K TAG on the RFID reader at VTF ACCESS CONTROL BOX 6500. When the Ab Key is released, the mode changes to SA.

- Critical devices are Disabled
- Critical device VCD1A1, VCD1A2, VCD1B, VCD2A1, VCD2A2, and VCD2B indicator lights at VTF CRITICAL DEVICE box 6504 are OFF
- "HAZARD WARNING" light at VGE1 Gate box 6498 is OFF
- "SAFE ACCESS" light at VGE1 Gate box 6498 is ON
- "AREA SECURED" light at VGE1 Gate box 6498 is ON
- Sweep is retained unless gate VGE1 and/or roof VRRE is opened

5.2.4.7 Possible mode changes based upon Ab Key position

1. With Ab Key Trapped
   a) SA (NO SWEEP) to RA – valid; press "H/W RESET" pushbutton
   b) SA (SWEEP OK) to RA – invalid; first release trapped key, then press "H/W RESET" pushbutton
   c) NA to SA – valid; release (un-trap) trapped key

2. With Ab Key released (not trapped)
   a) SA (NO SWEEP or SWEEP OK) to RA – valid; press "H/W RESET
   b) RA to NA – turn Ab key CW to trap key (must have SWEEP OK)

5.2.4.8 End of Experimental Operations - When the VTF experimental area is not in use, there are three possible operational configurations in which to leave the VTF ACS, with the Ab Key trapped, to prevent loss or theft of key.

1. NA (Critical Devices are enabled), the VTF facility shall not be left unsupervised in NA.

2. RA with NO SWEEP, VRRE OPEN (Critical Devices are disabled, VGE1 is locked, entry requires RHIC card; recommended)
   a) From NA, release Trapped Key

b) Mode changes to SA, SWEEP OK
c) Operate Roof Motion Control Box to Open VRRE
d) VTF Sweep is disabled and Area Secured light is off
e) Press “H/W RESET” pushbutton to go to RA
f) Trap Ab Key in TRAPPED KEY switch
g) A full sweep will be required to resume operations

3. RA with NO SWEEP, VRRE CLOSED (Critical Devices are disabled, VGE1 is locked, , entry requires RHIC card; recommended)
   a) From NA, release Trapped Key
   b) Mode changes to SA, SWEEP OK
   c) Open and close VGE1 gate
   d) VTF Sweep is dropped and Area Secured light is off
   e) Press “H/W RESET” pushbutton to go to RA
   f) Trap Ab Key in TRAPPED KEY switch
   g) A partial (CS2) sweep will be required to resume operations

4. SA with SWEEP OK (Critical Devices are disabled, VGE1 locked, accessible only by Emergency Entry or mode change, sweep retained; not recommended - consult with physicist in charge of the VTF operation. See 5.2.4.6 above)
   a) From NA, release Trapped Key
   b) Mode changes to SA, SWEEP OK
   c) Trap Ab Key in keyswitch

5.2.5 VTF Staff Operations/Activities with Critical Devices

Critical Devices are enabled only in No Access mode

- To enable Critical Devices, place VTF ACS in NA mode per step 5.2.4.4 (change mode from RA to NA)

Critical Devices are disabled in Safe Access and Restricted Access modes

- To disable Critical Devices, place VTF ACS in SA mode per step 5.2.4.6 (change mode from NA to SA)
- To disable Critical Devices in an emergency situation, press Emergency Entry or Exit button.

5.2.6 VTF Staff Operations/Activities with an ODH alarm

The ODH sensors are installed and calibrated by designated staff and accordance with an appropriate OPM procedure.

5.2.6.1 VTF Staff Operations/Activities with an ODH alarm

When a oxygen level is detected by the ODH sensors lower than the approved level, the VTF ODH subsystem will automatically activate

its visual and audible alarms as well as send a signal to VTF ACS A Division PLC system. The VTF HMI will indicate an ODH on its VTF ACS SYS MAIN PAGE. When the ambient oxygen level is above the approved level, the ODH subsystem will automatically shut off its audible and visual alarms and reset the signal. An ODH alarm will drop RA mode into SA mode, but does not affect SA and/or NA operation modes.

- Once the VTF Staff observe or hear the ODH alarm, vacate the VTF area/Bldg. 912 as quickly as possible.
- Report the ODH hazard to the relevant Supervisor
  After the ODH hazard is eliminated:
- To reset the ODH alarm in RA mode of VTF ACS, press the H/W RESET button (The ODH sensors' ambient oxygen level must be higher than the required level)
- Once the ODH alarm is reset, VTF HMI will indicate the tripped ODH status is OK and VTF ACS is in RA mode.

5.2.7 <u>VTF Staff Operations/Activities response to Chipmunk Alarms</u>

5.2.7.1 Chipmunk alarms come in two types: Rad Trip, a response to radiation above a prescribed level, and Failsafe, a response to the Chipmunk's circuitry self-detection that it is no longer functional

5.2.7.2 Chipmunks are installed, replaced and decommissioned by Authorized staff.

5.2.7.3 VTF Staff Operations/Activities response to a Chipmunk Rad Trip

The Chipmunks will alarm in response to radiation above an approved level. When the radiation level is higher than the prescribed level, the RAD TRIP alarm will be triggered and VTF HMI will indicate the triggered Chipmunk RAD TRIP status is "RAD". Chipmunk Rad Trips do not affect all operation modes in the same manner. In case of a RAD Trip, all modes remain in their current state with a RAD indication on VTF HMI. In NA mode, Critical Devices will be disabled and interlocked when a RAD Trip is detected; once the RAD Trip alarm has been successfully reset, CDs will be re-enabled.

- To reset the RAD TRIP of VTF Chipmunks, push the RAD TRIP RESET pushbutton at enclosure 6500. (To successfully reset the Chipmunk's Rad Trip, the Radiation level in the area must first go down to the required ambient level)
- Once the RAD Trip alarm is reset, VTF HMI will indicate the tripped Chipmunk RAD status is OK.
- ***If the VTF ACS still stays in SA, contact the Access Controls Group at Ext: 7733.***

5.2.7.4 VTF Staff Operations/Activities response to a Chipmunk FAIL SAFE alarm

Chipmunks' Failsafe status can be observed on the HMI VTF ACS SYS MAIN PAGE. When a Chipmunk fail safe status is detected, VTF HMI indicates that Chipmunk FAIL SAFE status is FAIL. Chipmunk Failsafe Trips do not affect SA mode, but will drop VTF ACS from RA or NA mode to SA mode. If operational mode was NA at the time of failsafe detection, Critical Devices will be disabled. In all modes, sweep will be retained if sweep mode was SWEEP OK prior to fail safe detection. In order to clear the Chipmunk Failsafe alarm, the Chipmunk must first be restored to normal working condition – in practice it is replaced with a working unit.

- To reset the Chipmunk Failsafe alarm, press HW RESET pushbutton at VTF enclosure 6500
- ***If the VTF ACS still stays in SA, contact the Access Controls Group at Ext: 7733.***

5.2.8 VTF Staff Operations/Activities at the HMI

VTF HMI is only for monitoring purposes. Most of the HMI pages are for testing and troubleshooting by C-AD ACG personnel. Status of Operation mode, Sweep, Hazard, Ab Key, Critical Devices, and Faults can be seen at a glance.

6. Documentation

None

7. References

7.1 C-A TPL 12-11 Securing Vertical Test Facility (VTF) for Experimental Tests

7.2 CA6030001, Access Control System (ACS) State Table for VERTICAL TEST FACILITY (VTF) at Building 912.

7.3 C-A-OPM 2.36, Lock and Tag Program for Control of Hazardous Energy.

7.4 C-A-OPM 9.1.16, Lockout/Tagout for Radiation Safety (RS LOTO).

8. Attachments

8.1 VTF ACS System Description

Attachment 8.1

VTF ACS System Description

1. VTF Facility Area

   The VTF Facility Area is where the Large Grain SRF gun test experiment will be conducted. It is a single point entry/exit blockhouse. The single point entry/exit consists of two barriers: the main entry gate of VTF is called VGE1; the VTF Retractable Roof Entry barrier is called VRRE. VGE1 is locked by an electromagnetic lock in normal operation. VRRE is the retractable roof which is controlled by the VTF Roof Motion Control box. When VTF experiments are not being conducted, the VRRE is open. Personnel can enter into/exit from the VTF experiment area by using the ladder entry which is called VLE1.

2. The VTF ACS

   The VTF ACS consists of 2 independent safety systems, “A” Division and “B” Division. “A” Division is controlled by Allen-Bradley PLC SmartGuard 600; “B” Division is controlled by Allen-Bradley Safety Relays. “A” Division is located in VTF “A” Division Enclosure 6501 on the wall under the VTF aluminum stair, while “B” Division is located in VTF “B” Division Enclosure 6502 mounted immediately below “A” Division Enclosure 6501. In “A” Division, a SmartGuard 600 PLC communicates with the other four I/O modules that monitor and activate the various VTF Components, Devices and Subsystems. The SmartGuad 600 runs the program which is written in accordance with the VTF state table. The VTF ACS also consists of its HMI to monitor its operation status and PLC, I/O modules, and safety relays status. This HMI is only for monitoring.

3. VTF Access Modes

   3.1 Safe Access (SA) Mode is indicated by an amber Safe Access light on VTF Enclosure 6498 and SA mode indicator on HMI VTF ACS SYS MAIN PAGE. Safe Access (SA) Mode does not allow entry into barrier VGE1 by the RHIC Card Barrier release (CR). Safe Access is the first operation mode after VTF ACS is powered on and is also the state entered into when a fault is detected in the VTF ACS’s hardware, such as VGE1 and VRRE switches, PLC, I/O modules, and so on. In SA mode, the critical devices of VTF are disabled. Safe Access mode can be changed to Restricted Access Mode by pushing the H/W RESET pushbutton, which is on ACS box 6500.

   3.2 Restricted Access (RA) Mode is indicated by a green Restricted Access light on VTF Enclosure 6498 and RA mode indicator on HMI VTF ACS SYS MAIN PAGE. RA Mode is the only mode which allows VTF staff to enter the VTF area by using CR. The sweep function may be activated only in Restricted Access mode. Authorized VTF staff sweep VTF blockhouse using the Ab key which shall be trapped in the Trapped Key switch when not in use. Attempting to sweep VTF with a duplicate Ab Key while the authorized key is trapped will drop VTF from RA to SA.

When the VTF facility area is successfully swept, the VTF ACS is ready to go to No Access Mode by trapping the Ab key in the Trapped Key switch, which is on ACS box 6500.

3.3 No Access (NA) Mode is indicated by a red No Access light on VTF Enclosure 6498 and NA mode indicator on HMI VTF ACS SYS MAIN PAGE. In No Access Mode, the radiation hazard is enabled in VTF blockhouse and is indicated by a red Hazard Warning light on VTF Enclosure 6498; no personnel are allowed to enter into VTF blockhouse because the critical devices of VTF ACS are enabled. Opening VGE1 or VRRE, or pushing the Emergency Entry button will change VTF ACS operation mode from No Access to Safe Access.

4. VTF ACS Subsystems

4.1 Critical Devices (CDs) Subsystem

The critical devices (CDs) are safety rated contactors used in the normal operations of VTF, and if disabled, will shut down the power to the radiation producing power supplies and associated devices. The CDs are VCD1A1, VCD1A2, VCD1B, VCD2A1, VCD2A2 and VCD2B. Each CD has their own indicator light indicating when the contactors are enabled. They are located in VTF Enclosure 6504.

The DIV A CDs consists of four contactors, VCD1A1, VCD1A2, VCD2A1 and VCD2A2, which are exclusively controlled by DIV A PLC. VCD1A1 and VCD1A2 are the safety contactors for RF amplifier No. 1; VCD2A1 and VCD2A2 are the safety contractors for RF amplifier NO. 2. The DIV B CD consists of two contactors, VCD1B and VCD2B, which are exclusively controlled by DIV B safety relays. VCD1B is for RF amplifier No. 1 and VCD2B is for RF amplifier No. 2. All CDS are enabled ONLY in No Access Mode. In Safe Access and Restricted Access modes, they are disabled.

4.2 The Entry/Exit Subsystem

The Entry/Exit Subsystem consists of a gate, VGE1 and a retractable roof entry, VRRE. VGE1 is the ground entry barrier while VRRE is the upper entry barrier at the single entry/exit point of the VTF experiment area. Status of the gate VGE1 and VRRE are respectively recorded by one SensaGuard switch and two Ferrogard switches installed on each barrier. Switches' electrical wiring for the gates are housed in VTF Enclosure 6499. Switches' electrical wiring for the VRRE are housed in VTF Enclosure 6505. VGE1 can be opened by CR only in RA mode and locked by the magnetic lock installed at the top of VGE1. In normal operation, VGE1 is locked. VRRE is usually open unless VTF is swept. CR Access is only allowed in Restricted Access mode.

4.3 The Emergency Subsystem

The Emergency Subsystem consists of 2 operators, Emergency Entry pushbutton and Emergency Exit pushbutton, whose purpose is to unlock VGE1 in case emergency entry is required by Fire/rescue personnel or egress is required in the unlikely event of normal exit mechanism failure. In NA mode, pushing either emergency entry or exit operator unlocks the door and also changes VTF mode from NA to SA. In Restricted

Access mode and without sweep, the only resulting action will be that VGE1 will unlock. But In RA and VTF facility area swept, pushing the Emergency Entry pushbutton will drop VTF ACS to SA.

4.4 The Sweep Subsystem

The VTF ACS Sweep Subsystem consists of 2 sweep stations. Sweep Station CS1 in VTF Enclosure 6497 is located in the VTF experimental area, and Sweep Station CS2 in VTF Enclosure 6498 is located outside the VTF VGE1 gate. The sweep function is activated ONLY in Restricted Access mode. A valid sweep is performed by using the Ab key which is normally trapped in the Trapped Key switch. This Ab key is released by activating the associated HID card reader with a valid HID iCLASS 2K TAG. Using any other Ab key rather than the authorized Ab key which is trapped in Trapped Key switch for sweep is invalid, and will drop VTF ACS into Safe Access mode.

4.5 The Radiation Subsystem

There are 2 Chipmunks monitoring radiation on top of VTF retractable roof, designated NMO 179 and NMO 180. The Chipmunks are able to interlock the VTF Critical Devices above a predetermined radiation level (Rad Trip) or if the Chipmunk fails (Failsafe Trip). This action is pertinent only in NA when the CDs are enabled. A Rad Trip will disable the Critical Devices and hold them off until the Rad Trip is cleared, after which the system can be reset and the Critical Devices are re-enabled. A Failsafe Trip will drop the VTF ACS operation mode to SA in addition to disabling the Critical Devices.

4.6 The ODH Subsystem

The ODH subsystem in VTF ACS provides ODH warning function in all VTF ACS operation modes; it is an automatic warning sub system. When VTF experimental area oxygen level drops below 18.0 ±0.5%, the ODH alarms will turn on automatically. When oxygen levels return to levels above 18.0±0.5%, the ODH alarms will automatically be turned off. There are 2 ODH sensors in the VTF ACS, located in the VTF experimental area and housed in VTF enclosure 6507. These two sensors are monitored by the ODH subsystem in enclosure 6506 and send ODH Trip signals to VTF ACS A Division PLC system. VTF ODH system is not associated with Fans and Vents. When ODH sensors are tripped, the ODH subsystem will enable the ODH alarms. Personnel around ODH enclosure 6506 will hear the ODH alarm sound and see the blue strobe lights flashing. In Restricted Access mode, the VTF operation mode will change from RA into SA when an ODH alarm is tripped.

If you are using a printed copy of this procedure, and not the on-screen version, then you MUST make sure the dates at the bottom of the printed copy and the on-screen version match.
The on-screen version of the Collider-Accelerator Department Procedure is the Official Version.
Hard copies of all signed, official, C-A Operating Procedures are available by contacting the ESSHQ Procedures Coordinator, Bldg. 911A

C-A OPERATIONS PROCEDURES MANUAL

ATTACHMENT

18.4.5.a Large Vertical Test Facility (LVTF) Sweep Checklist

C-A OPM Procedures in which this Attachment is used.		
4.56		
18.4.5		

Hand Processed Changes

HPC No.	Date	Page Nos.	Initials

Approved: ***Signature with Date on File***
Collider-Accelerator Department Chairman Date

C. Naylor

18.4.5.a Large Vertical Test Facility (LVTF) Sweep Checklist

(Authorized person):

Time: Date:

Warning:
Vertical Test Facility (VTF) should be void of personnel once sweep is complete.
No personnel should be working at any elevation along or about the outsides walls of VTF once sweep is complete.

Prerequisites

- One authorized person to perform sweep
- C-A TPL 12-11 ATT 8.1 "Vertical Test Facility Sweep Checklist"
- Guide to Operate VTF Roof (copy posted at Roof Controller)
- TLD, Flashlight
- VTF set to RESTRICTED ACCESS (RA) mode
- Deck grating at ladder into pit in VTF enclosure must be locked in-place
- VTF East and West Roof Cameras must be operational
- VTF Roof must be operational

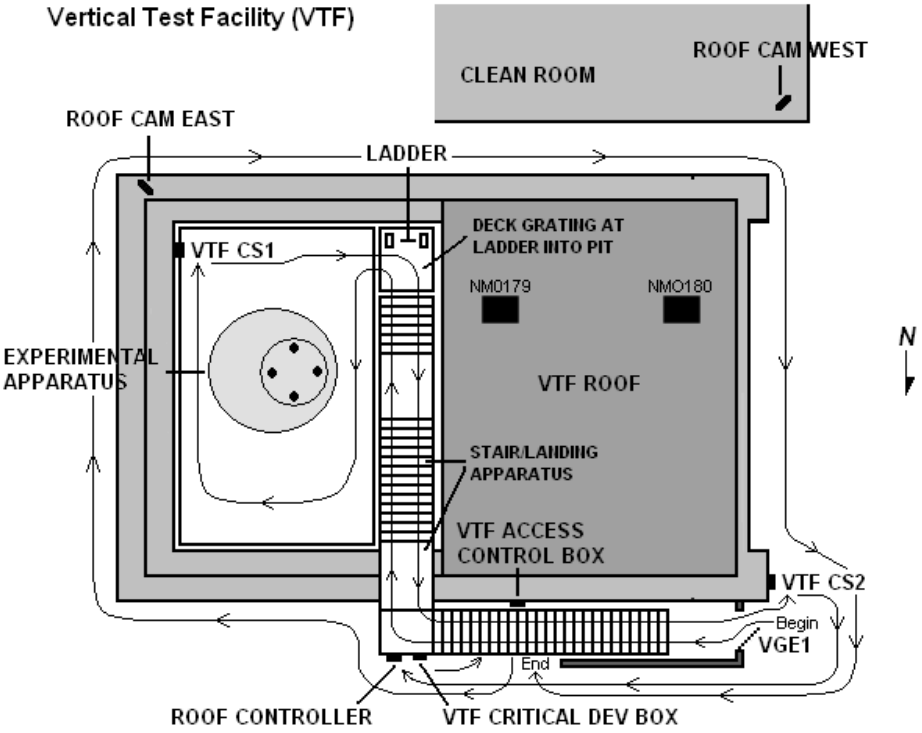

Check

Note:
VTF Roof must be operational before the sweep begins. A copy of the Guide to Operate the VTF Roof should be posted at the Roof Controller (ENCLOSURE #6412).

____1. Confirm VTF Roof is operational.

Warning:
IF the VTF enclosure/roof area is not clearly visible when using the VTF ROOF CAM EAST and VTF ROOF CAM WEST monitors, located above the ROOF CONTROLLER (ENCLOSURE #6412) and the VTF CRITICAL DEV BOX (ACS Box 6504), THEN abort the sweep until proper video is restored so that the area can be clearly seen when using the monitors.

____2. Verify VTF enclosure/roof area is clearly visible when using VTF ROOF CAM EAST and VTF ROOF CAM WEST monitors.

Warning:
IF the deck grating at the ladder down to the pit inside the VTF is not locked in-place, THEN abort the sweep until qualified individuals have cleared the pit of personnel and locked the deck grating in-place.

____3. Ensure deck grating at ladder down to pit inside VTF is locked in-place.

Warning:
IF the red HAZARD indication and the magenta on indications for [VCD1A1 & A2, VCD1B, VCD2A1 & A2, VCD2B] appear on the Allen-Bradley PanelView screen (HMI-Human Machine Interface) (ACS Box 6500), and the VTF CRITICAL DEV indicators [VCD1A1, VCD1A2, VCD1B, VCD2A1, VCD2A2, VCD2B] are lit (ACS Box 6504), THEN the enable is present that allows power from the RF amplifier(s) to be applied to the experimental apparatus inside the VTF.

____4. Scan RF-ID to retrieve Ab key from TRAPPED ACCESS KEY switch on VTF ACCESS CONTROL BOX (ACS Box 6500),
- ___swipe RF-ID over HID reader (light on reader should turn from red to green),
- ___un-capture Ab key by turning key counterclockwise (CCW) from horizontal (KEY TRAPPED) position to vertical (KEY FREE) position,
- ___remove Ab key from key switch.

Note:
IF the red HAZARD indication and the magenta on indications for [VCD1A1 & A2, VCD1B, VCD2A1 & A2, VCD2B] appear on the Allen-Bradley PanelView screen (HMI-Human Machine Interface) (ACS Box 6500), and the VTF CRITICAL DEV indicators [VCD1A1, VCD1A2, VCD1B, VCD2A1, VCD2A2, VCD2B] are lit (ACS Box 6504), THEN the red HAZARD indication should change to a green NO HAZARD indication, the magenta on indications should change to green off indications, and the VTF CRITICAL DEV indicators should go out when the Ab key is un-captured thereby removing the enable for the RF amplifier(s) to apply power to the experimental apparatus inside the VTF.

____5. Ensure enable is removed that allows RF amplifier(s) to apply power to experimental apparatus inside VTF,
- ___verify red HAZARD indication changed to green NO HAZARD indication on HMI (ACS Box 6500),
- ___verify magenta on indications changed to green off indications for [VCD1A1 & A2, VCD1B, VCD2A1 & A2, VCD2B] on HMI (ACS Box 6500),
- ___verify VTF CRITICAL DEV indicators [VCD1A1, VCD1A2, VCD1B, VCD2A1, VCD2A2, VCD2B] are out (ACS Box 6504).

Note:
IF the VTF is in NO ACCESS (NA) mode, THEN the enclosure changes to SAFE ACCESS (SA) mode when the Ab key is un-captured (ACS Box 6500).

Note:
VTF must be set to RESTRICTED ACCESS (RA) mode prior to performing sweep of enclosure.

____6. Ensure VTF is set to RA by viewing HMI (ACS Box 6500).
- ___IF VTF is in SA after retrieving Ab key, THEN set enclosure to RA by pressing H/W RESET BUTTON (ACS Box 6500).
- ___Observe red SA indication change to green RA indication on HMI (ACS Box 6500).
- ___Observe SAFE ACCESS light is out and RESRICTED ACCESS light is lit (ACS Box 6498).

____7. Enter VTF through VGE1 using RHIC (Blue/Pink) access card with card reader to right of door (ACS box 6498).

____8. Proceed up stairs into VTF enclosure.

Warning:
Personnel found in the VTF enclosure during the sweep must leave with the individual performing the sweep.

____ 9. Make announcement that all personnel must leave the enclosure.

____10. Sweep to the right, clockwise (CW) around the EXPERIMENTAL APPARATUS.
____11. Search area for personnel, checking in and around any apparatus.
____12. Verify with flashlight and verbal announcements that no personnel exist below deck grating in VTF pit.
____13. Verify deck grating at ladder down to VTF pit is locked in-place.

Note:
IF VTF roof is not closed within 1200 seconds (20mins) of setting VTF CS1, THEN sweep of enclosure must be restarted. Countdown timer on HMI (ACS Box 6500) indicates time remaining to close roof.

____14. Set first check station (VTF CS1) at Southeast (SE) corner of area (ACS box 6497),
___insert Ab key in key switch,
___turn key clockwise (CW) and then counterclockwise (CCW), from **0** (OFF) position to **1** (ON) position back to **0** (OFF) position,
___observe VTF CS1 light turns on then turns off,
___remove Ab key from key switch.
____15. Sweep to stairs and check space between VTF roof and shield blocks.
____16. Sweep back up stairs to the upper landing at outside of enclosure wall.

Warning:
Use designated pull-point and be aware of pinch-points when raising stair/landing apparatus that leads into VTF enclosure.

____17. Carefully pull-up stair/landing apparatus that leads into enclosure and lock apparatus in up position using locking pin to lower left of hinges.
____18. Visually scan overall VTF enclosure/roof area for personnel.
____19. Sweep down remaining stairs to a good position for visual inspection of space underneath VTF roof.
____20. Visually inspect space underneath VTF roof for personnel.
____21. Continue sweep down remaining stairs and exit through VGE1.
____22. Set second check station (VTF CS2) to right of VGE1 (ACS box 6498),
___insert Ab key in key switch,
___turn key CW and then CCW, from **0** (OFF) position to **1** (ON) position back to **0** (OFF) position,
___observe VTF CS2 light turns on then turns off (ACS Box 6498),
___remove Ab key from key switch.
____23. Proceed to ROOF CONTROLLER (ENCLOSURE #6412),
___verify no personnel are in or on enclosure/roof area using VTF ROOF CAM monitors above,
___make verbal announcement indicating closing VTF roof,
___close roof as per Guide to Operate VTF Roof,
___observe roof is closed using VTF ROOF CAM monitors above.
____24. Observe yellow NO SWEEP indication changed to O.D. green SWEEP OK indication on HMI (ACS Box 6500).

____25. Capture Ab key in TRAPPED ACCESS KEY switch (ACS box 6500),
___insert Ab key in key switch,
___turn Ab key CW from vertical (KEY FREE) position to horizontal (KEY TRAPPED) position,
___observe green RA indication change to magenta NA indication on HMI (ACS Box 6500),
___hear BEAM IMMINENT alarm sound for 30 second.

____26. Observe and listen for the following after 30 seconds,
___green NO HAZARD indication changes to red HAZARD indication on HMI (ACS box 6500),
___VCD1A1 & A2 and VCD1B indications on HMI (ACS Box 6500) change from green off to magenta on,
___VCD2A1 & A2 and VCD2B indications on HMI (ACS Box 6500) change from green off to magenta on,
___VTF CRITICAL DEV indicators [VCD1A1, VCD1A2, VCD1B, VCD2A1, VCD2A2, VCD2B] turn on and stay lit (ACS box 6504),
___BEAM IMMINENT alarm stops.

Warning:
Any ladders/scaffolding not permanently affixed in place on or about the outside walls of VTF should be removed before the sweep is fully complete.

____27. Sweep CW around the outside of VTF to ensure no personnel are working at any elevation along or about the outside walls.

____28. Verify, the red HAZARD WARNING and NO ACCESS lights are lit, the yellow AREA SECURED and VTF CS2 lights are lit, and the green RESTRICTED ACCESS and yellow SAFE ACCESS lights are out, on ACS Box 6498 adjacent to VGE1.

____29. Notify experimental personnel that sweep is complete.

____30. File completed checklist in “Completed Vertical Test Facility (VTF) Sweep Checklist Binder”.

If you are using a printed copy of this procedure, and not the on-screen version, then you MUST make sure the dates at the bottom of the printed copy and the on-screen version match.
The on-screen version of the Collider-Accelerator Department Procedure is the Official Version.
Hard copies of all signed, official, C-A Operating Procedures are available by contacting the ESSHQ Procedures Coordinator, Bldg. 911A

C-A OPERATIONS PROCEDURES MANUAL

18.5.1 Procedure for testing the ECX 5-cell SRF cavity

Text Pages 2 through 4

Attachments

Hand Processed Changes

HPC No.	Date	Page Nos.	Initials

Approved: _____***Signature on File***_____ _____
Collider-Accelerator Department Chairman Date

I. Ben-Zvi / J. Reich

18.5.1 Procedure for Testing the ECX 5-Cell SRF Cavity

1. Purpose

1.1 Scope

This OPM addresses the activities associated with the testing of the superconducting 5-cell 703.75 MHz cavity of the Electron Cooling Experiment, otherwise known as the ECX cavity, in the Energy Recovery Linac (ERL) cave in building 912.

2. Responsibilities

2.1 Facility Manager – overall responsibility for safe configuration and operation of the facility.

2.2 Test Coordinator – responsible for planning and executing the series of test plans; ensuring that operations are carried out in a safe manner, directing the activities of system operators while they are on shift, and insuring that the facility is properly staffed.

Must have a thorough understanding of the configuration and operation the of relevant systems required for the execution of the planned experiments and of the Access Control System (ACS) and Machine Protection System (MPS).

2.3 System Operators - They operate sub-systems and assist the test coordinator(s) in the execution of tests. Systems operated by System Operators are the ACS, vacuum system, cryogenic system, RF system.

2.3.1 The System Operators must have a thorough understanding of the systems they operate as well as the configuration and operation of the ACS and MPS systems.

3. Prerequisites

Personnel training/qualification**:**

- C-AD Access Training.
- ACS system training is required for system operators, principal investigators and the test coordinator.

A list of qualified personnel is given in Attachment 8.1. Only The Facility Manager may drop/add personnel from the list.

States of the Cave

Cave State	PPS	Staffing Requirements
Cryomodule warm	Off	May be left unattended
Cryomodule cold High Power RF Off	Run	Cryogenic operator must check status in control room at least once per hour
Cryomodule cold High Power RF on	Run	Cryogenic, RF operators as needed One operator in control room

Table 1

4. Precautions

The hazards in the operations of the ECX cavity include cryogenics hazards, Oxygen Deficiency Hazard, ionizing radiation hazard, high RF power hazard and high-voltage hazard (in the RF amplifier).

5. Procedure

1) The cryomodule vacuum is established in accordance with C-A-OPM 18.7.2, "ERL Cryogenic System Vacuum Skid Operation".
2) The cryomodule is cooled down in accordance with C-A-OPM 18.7.1, "ERL Cold Emission Test Cryogenic System Operation".
3) Low level RF measurements, including a network analyzer, are permitted during steps 1 and 2, with a power level not to exceed 10 mW. At the end of low-level RF measurements, remove the network analyzer from the cave.
4) Tuners are operated according to C-A-OPM 18.8.1, "Procedure for XC Fast and Slow Tuner".
5) The cave is searched and interlocked, according to C-A-OPM-ATT 18.4.2.a, "ERL Experimental Area Sweep Checklist".
6) High RF power is applied according to C-A-OPM 18.8.3 "Procedure for Turning on the 50kW RF Amplifier in ERL".
7) RF measurements, RF conditioning and phase lock and amplitude lock are implemented as determined by the Test Coordinator, described by C-A-OPM 18.5.2 "Fundamental Power Coupler Conditioning Procedure".

6. Documentation

None

7. References

7.1 C-A-OPM 18.7.2, "ERL Cryogenic System Vacuum Skid Operation".

7.2 C-A-OPM 18.7.1, "ERL Cold Emission Test Cryogenic System Operation".

7.3 C-A-OPM 18.8.1, "Procedure for XC Fast and Slow Tuner".

7.4 C-A-OPM-ATT 18.4.2.a "ERL Experimental Area Sweep Checklist".

7.5 C-A-OPM 18.8.3 "Procedure for Turning on the 50kW RF Amplifier in ERL".

7.6 C-A-OPM 18.5.2 "Fundamental Power Coupler Conditioning Procedure".

7.7 C-A-OPM 18.4.1 "Operation of ERL (Electron Recovery Linac) PASS (Particle Accelerator Security System".

8. Attachments

8.1 List of Qualified ERL Personnel

8.2 Background & System Description

8.3 Hazard, Radiation & Personnel Safety System Information

Attachment 8.1

List of Qualified ERL Personnel*

S. Belomestnykh
D. Kayran
W. Xu

***ERL Facility Manager Must Approve Changes to this List**

Attachment 8.2 - Background & System Description

1.2 Background

The Energy Recovery Linac (North East Building Addition, Building 912) is used to test cryomodules, cryogenic assemblies and other RF structures to verify that they meet design criteria. The facility includes a shielded area ("test cave") and associated control room. The test cave and its adjacent service rooms have various hazards which must be recognized and mitigated: Ionizing radiation from RGDs and in the future from accelerated electron beams, ODH, sources of high power RF (non-ionizing radiation) and cryogens.

Operations of the ECX cavity follows safe operating practices of the Collider-Accelerator Department.

The purpose of the ECX cavity is to accelerate electrons with an energy gain of up to about 20 MeV. This takes place when the cavity is operated with an injector. However, under certain conditions, the cavity is a RGD (Radiation Generating Device).

The ECX cavity is a Radiation Generating Device when it is under vacuum, and it is cooled to liquid helium temperature and it is powered by a high-power RF system.

To assure safety, clearly defined operating procedures must be followed during use of the cave. They are detailed in this SOP. These administrative procedures are required to ensure safe operations of the cave both during radiation-producing experiments, high power RF operation; operation of cryogenic assemblies and during periods of non-operation. General safety considerations such as electrical safety and cryogenic safety will be based on the appropriate codes and practices as described in the BNL SBMS.

1.3 Test Cave Description

The ERL Test Cave is located in Building 912 at the NEBA. The facility includes the test area (the cave), equipment building and the control room. The shielded area is 28 ft. wide by at least 13.5 ft. high by 64 ft. long. The wall shielding is concrete and at least 4 ft. thick on all sides. A vent fan assembly and several small penetrations are located at various positions on this shield.

Access to the test area is through two doors, one at the north end, and another at the south end, both equipped with a labyrinth and interlocks. Both doors must be closed following a search and interlock activation. A ceiling vent exhausts gaseous cryogens in the event of a leak causing a potential oxygen deficiency condition.

1.4 Subsystems

The ECX cavity is enclosed in a cryostat. The cavity and its cryostat together make a “cryomodule”. The cryomodule is served by the following subsystems:

1) Cryogenics, including liquid nitrogen, 5K liquid helium supply, 2K liquid helium supply, vacuum pump to pump the helium to low pressure as required to produce 2K, instrumentation to measure temperatures, liquid cryogen levels, pressure and flow.
2) Vacuum systems to pump down on the insulating vacuum of the cryostat and on the cavity’s beam-line vacuum, including instrumentation to measure the vacuum levels.

3) RF system, to provide high power RF (the amplifier is capable of up to 50 kW) at approximately 703 MHz, including instrumentation to measure RF power levels in various points, including forward and reflected power from the cavity, field pick-up from the cavity, frequency / phase lock and amplitude lock.

4) Fundamental Power Coupler, which couples the RF power to the cavity, with water and 5K helium cooling, provided with instrumentation to detect arcs and measure temperature.

5) Slow and fast mechanical tuners, provided with instrumentation to command the cavity frequency and monitor the tuners’ action.

6) Machine protection system, providing RF power permit only if permitted by the vacuum system, the cryogenic system and the fundamental power coupler system.

7) Personnel protection system, providing high RF power permit only if the cave is interlocked and if the ionizing radiation monitors are within a permitted level.

Attachment 8.3 – Hazard, Radiation & Personnel Safety System Information

Hazard Analysis

The potential hazards associated with the cave operations include electrical/electrocution, non-ionizing radiation (RF), ionizing radiation, vacuum, ODH, and material handling concerns. These hazards and their mitigation are covered in the following table. Radiation mitigation and the personal safety system are discussed in detail following the table which begins on the next page.

Hazard	**Cause**	**Mitigation Administrative**	**Mitigation Engineering**
Electric shock Control room or cave	Ion pump power supply Cold cathode gauge high voltage +/- 3kV at 5 mA	All voltage sources are "plug in ". Must unplug before servicing. Power-down procedures are in place.	Only SHV connectors are used. This type of connector makes the ground connection first when plugging in and breaks it last when unplugging the connector
Electric Shock: control room or cave	Piezo element Power supply Up to 1 kV at 2 A	- Danger High Voltage tags on each cable	
Ionizing Radiation	Inherent hazard from operating high gradient cavities in vacuum	- Personnel excluded from the cave during high power ops (anything above 1W RF power)	- shielding in place - ACS system ensures that high voltage is not permitted on the high power RF sources when the switching network permits the RF to enter the cave and the cave may be occupied. - Radiation surveys by trained staff or fixed monitoring equipment at turn on and at regular power increase intervals. - An area radiation monitor is interlocked to RF power.
ODH	Pressure relief due to cryogenic failure	- ODH Assessment and rating of cave	ODH Monitoring system Static Vent Exhaust Fan Non –vent penetrations sealed

Hazard	Cause	Mitigation Administrative	Mitigation Engineering
Non-Ionizing Radiation due to RF leakage from waveguide: RF burns, eye damage, tissue heating	Improperly assembled waveguide joints or waveguide component failure	- Torque Procedure to be followed (attached) - RF survey after assembly of joints upstream of the LOTO shutter located within the cave.	
Vacuum failure	Implosion: puncture ear drum Vacuum failure when cryomodule is full of cryogen will lead to cryogen release (refer to mitigation for oxygen deficiency)		All vacuum windows are covered or contained in waveguide during normal operations. All reliefs are located away from face level.
Equipment damage >$10K	Unqualified system operators	➢ Startup and shutdown procedures ➢ All operators trained.	

- ➢ Ionizing radiation is produced when high gradients are applied to evacuated RF structures such as cryomodule testing.

- ➢ Cryogenic fluids must be used inside the cave; therefore, on-line oxygen deficiency monitoring is required.

- ➢ High RF power must be used for the tests.

<u>Hazard Mitigation</u>

Safe operation of the facility is accomplished through the use of a combination of engineering and administrative controls:

1. Radiation shielding and monitoring.
2. TLD monitoring of staff who must enter radiologically-controlled areas.
3. A Access Control System (ACS).
4. Provision of suitable hand held radiation monitors for periodic verification of shielding effectiveness.
5. Oxygen deficiency monitoring system.
6. Training for staff that must enter ODH areas.
7. Detailed operational procedures under which all experiments are conducted by qualified staff scientists and engineers.
8. Several ACS emergency kill switches located in the test cave and in the control room. Activation of any of these kill switches removes the permit from the high power RF sources' high voltage power supplies.
9. LOTO procedures for specific tasks.

Radiation Production Estimate

Ionizing radiation production due to cryomodule testing can be very intense, producing high intensity radiation but is, by the nature of the operation, erratic. The maximum dose rate is based on the following conservative assumptions: The ECX 5-cell cavity, a maximum cavity effective voltage of 20 MeV, 50 W of power (effective current of 2.5 μA) can result in an intermittent X-ray source term of approximately 30,000 rads m^2h^{-1} "end on " to the X-ray source and 620 rads m^2h^{-1} laterally (90 deg.). Neutron production is theoretically possible. Estimates of giant resonance neutron production on thin niobium result in a yield of 1.56E+07 n s^{-1} for 50 W. A conservative assumption for average neutron energy, 2 MeV, results in a neutron source term estimate of approximately 0.02 rem m^2 hr^{-1}.

These source terms do not take into account RF duty cycle and occupancy factors for personnel in the vicinity of the cave.

Radiation Shielding Calculations

The facility is surrounded by at least 4 feet of concrete. The shortest distance of the ECX cavity to the closest wall is 100 inches or 254 cm. (At the shortest distance, the concrete thickness is actually 8 feet but we ignore this for conservative estimation.)

From A. H. Sullivan's book of "A Guide to Radiation and Radioactivity Levels near High Energy Particle Accelerators", Nuclear Technology Publishing, 1992, fig. 3.7, the concrete thickness to achieve a factor of 10 reduction on X-ray radiation is about 17 cm. Therefore, for the highest possible X-ray source term of 30,000 rads m^2h^{-1} as stated above, the radiation behind a 4 foot concrete wall is $30000 / 4\pi / (3.7592)^2 / 10^{121.92/17} = 1.14\times10^{-5}$ rad/h (or 1.14×10^{-5} rem/h because for X-ray, the radiation weighting factor is 1).

From the same book, in Table 3.3, the mean-free-path or attenuation length for concrete for neutrons < 25 MeV is about 18 cm. Therefore, the neutron radiation behind the 4 foot concrete wall is $0.02/ 4\pi /(3.7592)^2 / 10^{121.92/17} = 1.29\times10^{-7}$ rem/h .

Both X-ray and neutron radiations estimated as above are well below the upper limits for the Radiation Area (0.1 rem/h) and even a Controlled Area (0.005 rem/h).

Radiation Mitigation

It is necessary to provide radiation shielding, a personnel safety interlock system to prevent inadvertent access to the test area, and both on-line and passive radiation monitoring in spaces adjacent to the ERL cave as integral to the design.

Personnel Safety System

BNL C-AD ACS for the ERL 912 Energy Recovery LINAC Personnel Protection Safety System.

C-A-OPM 18.4.1 "Operation of ERL (Electron Recovery Linac) PASS (Particle Accelerator Security System.

C-A-OPM-ATT 18.4.2.a "ERL Experimental Area Sweep Checklist".

If you are using a printed copy of this procedure, and not the on-screen version, then you MUST make sure the dates at the bottom of the printed copy and the on-screen version match. The on-screen version of the Collider-Accelerator Department Procedure is the Official Version.

C-A OPERATIONS PROCEDURES MANUAL

18.5.2 Fundamental Power Coupler Conditioning Procedure

Hand Processed Changes

HPC No.	Date	Page Nos.	Initials

Approved: _____***Signature with Date on File***_____
Collider-Accelerator Department Chairman Date

W. Xu

18.5.2 Fundamental Power Coupler Conditioning Procedure

1. Purpose

To define the operating conditions and requirements for operation of the Fundamental Power Coupler (FPC). This procedure is to be used during the room temperature conditioning of the FPC as well as during the cold operation of the FPC.

2. Responsibilities

None

3. Prerequisites

- Suitable low level RF drive system
- 50 kW transmitter operating procedure
- PASS system operational
- DI cooling water operational
- Machine Protection System operational
- Data logging operational for both the PET system as well as the cryogenic system
- Confirm cryo status/operation

4. Precautions

None

5. Procedure

1. Ensure all sub-systems described above are operational

2. Ensure vacuum read-out for the beamline is at least $5e^{-9}$ torr and the insulating vacuum is at least $5e^{-5}$ torr.

3. Ensure the 5K LHe circuit is operating either with LN2 or LHe

4. Turn on the cooling water supply to the 50 kW transmitter and FPC cooling circuit.

5. Open the valves for the cooling water supply and return to the FPC by first opening the return valve and then the supply valve. Check for leaks at the FPC.

6. Ensure all cables to and from the directional coupler in the waveguide are connected and that recent cable calibrations have been carried out, and the calibration data is available.

7. Ensure both arc detectors are connected to the waveguide and the FPC inner conductor.

8. Have the ERL block house enclosure swept as per ERL sweep procedure C-A-OPM-ATT 18.4.2.a.

9. Place ERL in mode 24 access from the PASS control system.

10. Ensure the machine protection status is OK for the following items for room temperature conditioning of the FPC.
    a. FPC cooling water flow switch
    b. Vacuum interlock from beamline and insulating vacuum
    c. Three arc detectors
    d. 50 kW RF transmitter

11. Rezero and calibrate the power meter heads if needed, and ensure all power meters read 0 dBm

12. Ensure PET system is operational and data logging is active

13. Ensure the Chipmunks adjacent to the cavity are actively logging

14. Ensure the power meter readings are live on the PET page

15. Activate the RF on the PASS system

16. Turn on the low level RF and ensure the power meters are all operating correctly by applying a few watts of power from the LLRF system and ensuring the Pi and Pr are equal.

17. Slowly begin increasing the power input to the FPC in small steps, and monitor the vacuum pressure in the beamline for signs of vacuum activity. Also monitor the FPC window temperature from the RTD on the cryogenic control screen, as well as the temperature of the 5K cooling circuit on the FPC.

18. When the vacuum level rises above $5e^{-8}$ Torr from an increase in incident power, remain at that power level until the vacuum drops below $2e^{-8}$ Torr.

19. If the vacuum level has been slowly increasing due to heating of the FPC look for instantaneous jumps in vacuum level associated with increases in the incident power. Remember, the RF amplifier will trip if the beamline vacuum level rises above $3e^{-7}$ Torr.

20. If the RF power trips due to arc detection, investigate where the arc was located and make a note of the power level at which this happened.

21. If a point is reached while trying to achieve 50 kW operation when excessive vacuum events or arcing are limiting the forward progress switch to a pulse mode of operation, the duty cycle shall be determined by the operator.

22. If pulsed operation is difficult or unproductive adjust the RF launch phase in an attempt to help process the FPC. An attempt can also be made to make use of the bandwidth of the 50 kW transmitter by adjusting the center frequency.

23. Once full power operation is achieved remain at this level for at least 2 hours.

24. Upon completion of the RF processing, reduce the RF drive power to 0 dBm and turn off the low level RF system.

25. Turn off the 50 kW transmitter per the 50 kW RF transmitter procedure.

26. Turn off the DI water system.

27. Return the ERL block house to Restricted Access on the PASS system.

28. Close the valves for the FPC cooling water system.

29. Ensure the data logging is successfully backed-up.

30. Record date, time and name of operator in lab notebook and record any pertinent notes.

6. Documentation

Required information maintained in responsible individuals engineering notebook.

7. References

7.1 C-A-OPM-ATT 18.4.2.a, "ERL Experimental Area Sweep Checklist".

8. Attachments

None

18.5.3 Procedure for Growing of Bi-Alkali (K2CsSb) Cathodes for ERL SRF Gun

Attachments

Hand Processed Changes

HPC No.	Date	Page Nos.	Initials

Approved: _____***Signature with Date on File***_____
Collider-Accelerator Department Chairman Date

E. Wang

18.5.3 Procedure for Growing of Bi-Alkali (K2CsSb) Cathodes for ERL SRF Gun

1. Purpose

1.1 This procedure covers the necessary steps needed for bi-alkali cathode growth on a cathode insert for the ERL SRF gun.

> **Note:**
> This procedure covers only the tasks related with the preparation of the two transport carts, the deposition chamber and growing of the bi-alkali cathodes on top of the Mo coated Cu cathode assembly of the ERL SRF gun.

2. Responsibilities

2.1 The ERL Liaison Physicist, the Photocathode Project Leader, or designee, is responsible for implementing the procedure.

2.2 Representatives from each involved group (vacuum, photocathode, SRF mechanical) are responsible to make sure that their systems are ready and properly interfaced with other systems.

2.3 The ERL Operations Specialist, or designee, is responsible for confirmation that all paperwork is in order and the system is ready before the cathode deposition can start.

3. Prerequisites

3.1 Perfect coordination among personnel preparing the transport cart and the deposition chamber is necessary to establish and maintain ultra-high vacuum (UHV) and particle-free environment.

3.2 Before assembly of the transport cart and the deposition system is performed the Liaison Physicist or the Photocathode Project Leader must make sure that:

3.2.1 Electrical supply is available in the room where both the transport cart and the deposition chamber are going to be assembled.

3.2.2 Portability of controllers and needed equipment is assured.

3.2.3 Access to particle-free environment for assembly of transport cart and deposition chamber is assured.

4. Precautions

4.1 If an abnormal condition arises while the movement of equipment is in progress, stop the movement and discuss the situation with the Work Control Coordinator or your supervisor.

5. Procedure

5.1 Transport Cart Setup - The starting point of this procedure is that a cathode stalk is already attached to the transport cart.

1. Ensure that all data loggers (pressure, temperature, etc) are operational for both, the transport cart and the deposition chamber.

2. Verify that heating system of the transport cart is functional and calibrated.

3. Verify that vacuum in the transport cart and deposition chamber is in the UHV regime with low partial pressures of H_2O, CO and CO_2. Low 10^{-10} mbar pressure in both systems is required.

4. Verify that K, Cs and Sb sources are in place, calibrated and ready for deposition. K and Cs sources are of the type Alvatec S-type defined in figure 2 of Appendix B and Sb sources are pellets 99.999% pure ordered to Kurt. J. Lesker with Part Number: EVMSB501141A. All sources should be isolated in the arms before assembly of the transport cart. This preparation should be performed no more than two days in advance to the assembly of the transport cart to the deposition chamber.

5. Increase the current quickly to 4.5 A. Once a spike in base pressure is observed, turn the current off. Now the alkali source is exposed to the system. In order to avoid contaminating the source, the arm vacuum should be maintained at low nano-torr and the bursting should be done just prior to cathode formation if possible.

Note 1:
The alkali sources are delivered in a capsule back filled with argon and sealed with indium. Prior to using the source, the seal has to be broken and the argon pumped out. Typically this is done when the new source is installed and the system has been baked for a few days and the base pressure is as low as the turbo pump allows (ideally should be low -10). Water reacts aggressively with alkali metal. The baking reduces the low pressure of water and unlike ion pump, the turbo pump used for baking can handle large burst of argon.

Note 2:
The manufacturer may specify a lower current for bursting. However, in our experience, the lower current leads to a smaller opening in the seal for the Argon to leak out, resulting in incontrollable evaporation direction.

6. Move transport cart with the Mo coated Cu cathode insert ready for growing of bi-alkali cathode to the same room as the deposition chamber. As stated in point 3, it is assumed that transport cart and deposition system have been already baked and stand in -10 range or better.

7. Make sure lower sliding assembly on cathode insertion cart is fully retracted and pinned to the drive screw.

5.2 Clean Room Set Up

1. Install the 4x4 portable clean room over the transport cart cathode assembly and up against the valve in the deposition chamber.

2. Install the 2x4 portable clean room as an anteroom.

3. Set up portable turbo outside clean room with clean flex hose penetrating into the clean room.

4. Clean all critical surfaces with ethyl alcohol and blow down with ionized filtered nitrogen until acceptable particle counts are observed.

5. Verify particulate-free condition in the room using a portable particle counter.

6. Cover all surfaces within the portable tent that do not process to particulate free requirement with clean room sheet wrap and seal/secure with clean room tape.

7. Remove protective covers from gate valve flanges.

5.3 Deposition Process

1. Pre clean the CeFix seal and chain clamp and stage all necessary clean tools and torque wrench for mating the cathode to the deposition system. Once load lock zone is particulate free, move valves together using lower lead screw on transport cathode insertion cart. Install CeFix seal and chain clamp. Torque clamp to TBD ft/lbs.

2. Install portable turbo pump on the RAV installed on the transport cart gate valve.

3. Connect gas tubes and prepare the heating set up for the Cathode substrate

4. Connect the vacuum gauging and control interlocks.

5. Pump and leak check with a sensitivity of $2x10^{-10}$ mbar l/sec He, the intermediate section of the load-lock. Install thermocouple and low particulate silicone heating jackets (if available) and bake the intermediate volume/chain clamp for 24 hrs at 200ºC. The ramp shall not exceed 50ºC/hr.

6. The cold finger volume should be baked here and valved into cathode before growing cathode. This avoids need to add turbo to a baked volume, or the addition of another ion pump.

7. Once both the load lock and the cold finger are baked and stabilized and close the intermediate volume turbopump isolation valve and open the transport cart isolation valve. Once the pressure has equilibrated and is at least in -10 range, the deposition system valve can be opened and the cathode moved into the deposition chamber to growing position.

8. Bi-alkali cathode growing. Note that in this section various temperatures and times are specified. See Appendix A for the details of raising and lowering the temperature.
   a) Heat up the Mo/Cu substrate to ~100°C using the hot gas.
   b) Ensure the pressure in the antimony arm is equal to or less than the main chamber
   c) Open the gate valve for the antimony arm and insert the antimony source in the main chamber, in front of the cathode. The antimony pellets are inside the crucible
   d) Turn on the Sb source heater in steps of 5 A to 65 A, waiting for 2 minutes between each step. This slow heating allows thermalization of the crucible and nearly constant evaporation rate. After that, increase the current in steps of 1 A, while watching the evaporation rate at the crystal monitor and Sb signature in RGA trace. When the evaporation rate is 0.1 Å/s stop increasing the current. Typically this occurs at ~ 70 A. The evaporation rate will continue to rise as the crucible thermalizes. The cathode substrate is exposed to Sb during this process and Sb film is being formed on the substrate. When the cumulative thickness on the crystal monitor is ~ 30 Å. turn off the current and quickly retract the source so that the Sb boat is inside the source arm. Then the valve of the arm can be closed to isolate the source from the main chamber. Since the crystal monitor location is different from that of the substrate, the deposition rate/film thickness on the substrate has

been calibrated against the crystal monitor. A thickness of 30 Å measured in crystal monitor is equal to ~ 160 Å on the substrate

e) Increase the temperature of the substrate to ~140°C.
f) Turn on the laser and make sure the beam is irradiating the cathode
g) Turn on the ammeter to measure the photocurrent and the power supply biasing the anode. Make sure the anode is biased +ve
h) Establish that the ammeter is working and the dark current is in the pA range
i) Check the pressure in the K arm to ensure that it is ≤ that in the main chamber.
j) Set the parameters of the RGA to monitor K
k) Turn on the current to the K source to 4.5 A for 5 minutes to degas the source (It is assumed that the K source has been unsealed prior to the evaporation. If not see below for the procedure). There may an initial spike that drops down to the base level within a few minutes
l) Open the valve on the K arm and insert K source into the main chamber to be in front of the substrate.
m) Increase the current to ~ 6 A. At this time, the RGA will start recording K and the photo emission current in the ammeter will start to increase
n) Continually monitor the QE as K is being deposited, and stop evaporation once the QE reaches maximum.
o) Once maximum is reached, turn off the source current, retract the source to the source arm and close the valve
p) Change the gas flow so that the substrate temperature is decreased to ~130°C.
q) Increase the current to the Cs source to 4.5 A for 5 minutes to degas it. The pressure may spike a little, but will drop to base level within a few minutes.
r) Open the gate valve and insert the Cs source in front of the substrate.
s) Increase the current ~ 6 A, while monitoring the photocurrent.
t) When the photocurrent reaches maximum (typically to a QE value of >1%), turn off the current and flow cool gas to quickly lower the temperature of the substrate. This will reduce the desorption of Cs from the surface
u) Retract the Cs source to its arm and close the gate valve.

9. Monitor the QE as the substrate cools to room temperature. Move the cathode from the deposition chamber into the transport cart and close gate valve.

10. Bleed up the load loack with particulate free processes including micron filter UHP Nitrogen and cover gate valve.

The cart with the cathode is ready to be moved to the ERL gun location.

6. Documentation

None

7. References

None

8. Attachments

8.1 Appendix A – Procedure for Heating the Substrate While Growing the K_2CsSb Cathode in the Deposition Chamber

8.2 Appendix B – List of Figures

8.3 System Description

8.4 C-A-OPM-ATT 18.5.3.a, "Key Personnel".

Attachment 8.1

Appendix A.

Procedure for heating the substrate while growing the K_2CsSb cathode in the deposition chamber.

1. <u>Purpose</u>

This procedure cover steps necessary for heating the substrate in a controlled way so the growth of the cathode can be performed according with recipe. This recipe basically states that the substrate has to be heated up to 100 C for Sb deposition and then heated up to 140 C for Potassium deposition. Next step is then cooled down to 135 C for Cs deposition. Finally, in order to assure the quality of the grown cathode the system has to be cooled down to 100 C in not more than 15 minutes. This way the balance between desorption and diffusion can be optimized so the cathode doesn't degrade. This 15 minute process has been tested successfully after the flux of gas was reversed for increasing the cooling rate. Figure 1 summarizes the heating test performed that is explained in point 13 from Procedure.

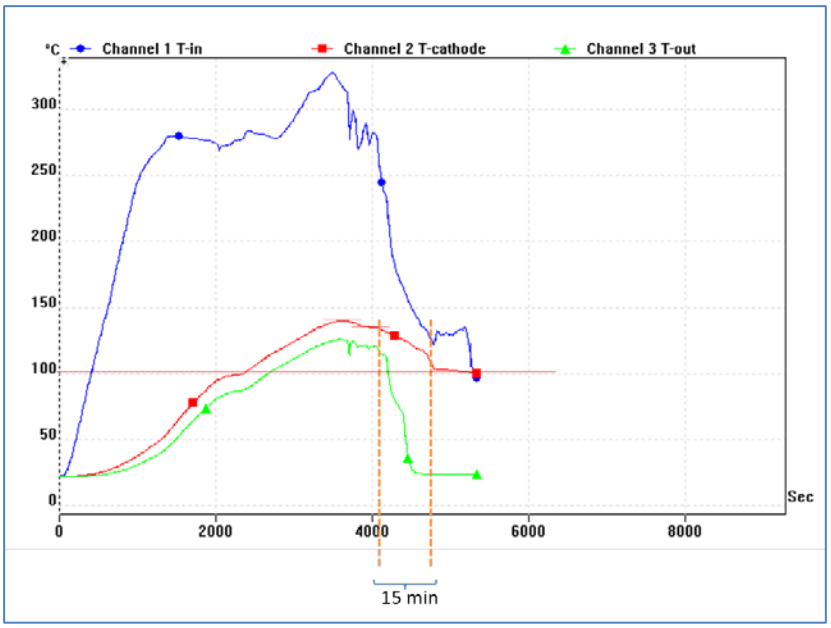

Figure 1: Three temperature values have been recorded during the heating process. The blue line is the temperature of inlet gas, the green line if the temperature of the outlet gas, and the red line is the temperature in the cathode. The values of 100C, 140 C and 135C are obtained and controlled by means of gas flux and voltage/current in the heater. Finally a cooling process from 135C to 100C in 15 minutes has been proved satisfactory. This cooling process is highlighted between orange dashed lines in the figure.

<u>Note</u>:
This procedure covers only the tasks related with the heating cycle in the substrate while the cathode is been growing.

2. Responsibilities

2.1 The ERL Photocathode Liaison Physicist and the Technician are responsible for implementing the procedure.

2.2 The ERL Operations Specialist, or designee, is responsible for confirmation that all paperwork is in order and the system is ready before the test can start.

3. Prerequisites

3.1 The vacuum during this test has not been higher than 5 x 10-7 mbar in the transport cart.

4. Precautions

4.1 The heater temperature has reached 300 degrees Celsius during the process. A tape barrier and a post heater as “Hot” are placed for security.

4.2 Do not run heater without nitrogen.

4.3 Be sure before process start that a full tank of Nitrogen is available.

5. Procedure

1. Set up data logger to monitor supply temperature, cathode temperature, and return temperature
2. Attach current monitor to heaters AC cord
3. Attached nitrogen hose to supply connection of the heater
4. Open nitrogen valve so that 10 CFH is indicated on the flow gauge
5. Turn on variac
6. Adjust variac to supply 4.5 amperes and 60 volts to the heater
7. Adjust nitrogen valve to 40 CFH
8. Reduce nitrogen flow rate when cathode temperature is nearing 100 degrees Celsius to about 20 CFH
9. Adjust variac to 3 amperes and 40 volts to the heater
10. Maintain 100 degrees Celsius for 30 minutes by adjusting nitrogen flow rate
11. Adjust variac to 4.5 amperes and 60 volts to the heater
12. Increase flow rate to 50 CFH
13. Reduce nitrogen flow rate when cathode temperature is nearing 140 degrees Celsius to about 35 CFH
14. Maintain 140 degrees Celsius for 30 minutes by adjusting nitrogen flow rate

15. Turn down variac to 3.5 amperes and 40 volts
16. Reduce nitrogen flow to 30 CFH
17. Adjust nitrogen flow as the cathode temperature approaches 135 degrees Celsius
18. Maintain 135 degrees Clesius for 30 minutes by adjusting nitrogen flow rate
19. Turn down variac to 0 amperes and 0 volts
20. Remove nitrogen hose from heater supply and attach to heater return
21. Increase nitrogen flow to 70 CFH to cool cathode
22. Monitor cathode temperature so that the cathode will reach 100 degrees in 15 minutes
23. When cathode temperature is nearing 100 degrees decrease nitrogen flow to 10 CFH
24. Remove nitrogen hose from return and reconnect to the supply of the heater
25. Turn on variac and adjust to 3.5 ampers and 40 volts
26. Adjust nitrogen flow to 25 CFM
27. Maintain 100 degrees for one hour by adjusting nitrogen flow rate
28. Turn off variac
29. Valve off nitrogen
30. Save data

Attachment 8.2

Appendix B.

List of figures:

1. Figure 1: Deposition system.
2. Figure 2: Alvatec sources used for Alkali evaporation.
3. Figure 3: Modification in opening of baffle in main chamber of deposition system.
4. Figure 4: Transport cart 1
5. Figure 5: Transport cart 2 with heating system
6. Figure 6: Transport cart attached to Deposition system.

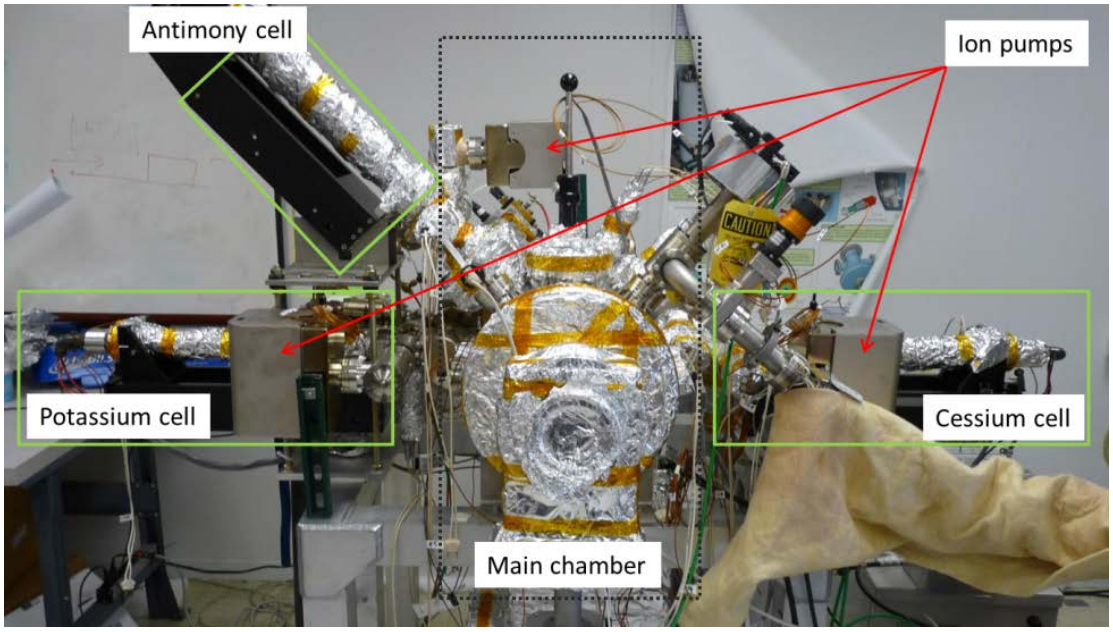

Figure 1: Deposition system where the cathode growth take place. The manipulators holding the sources are highlighted in green boxes. These arms are individually pumped by 25l/s ion pumps which keep the sources at appropriate UHV. The main chamber where the evaporation process takes place is in the center of the whole set up.

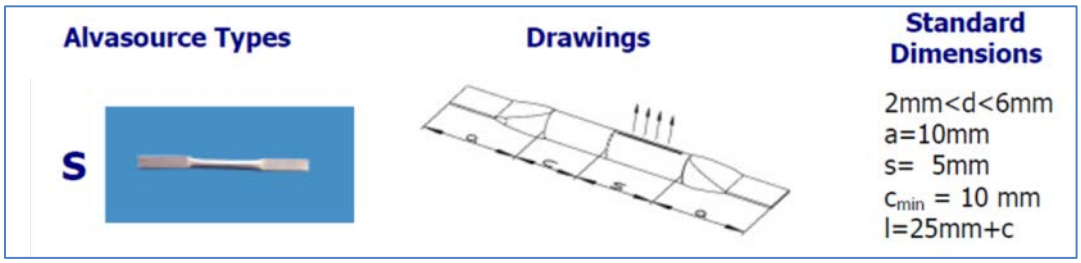

Figure 2: In the figure it is shown the type of sources used for the preparation of the cathode. They are of the type *AS-3-K-20-S, this is 3 mm Alvasource with 20mg K (or Cs), S-shape.*

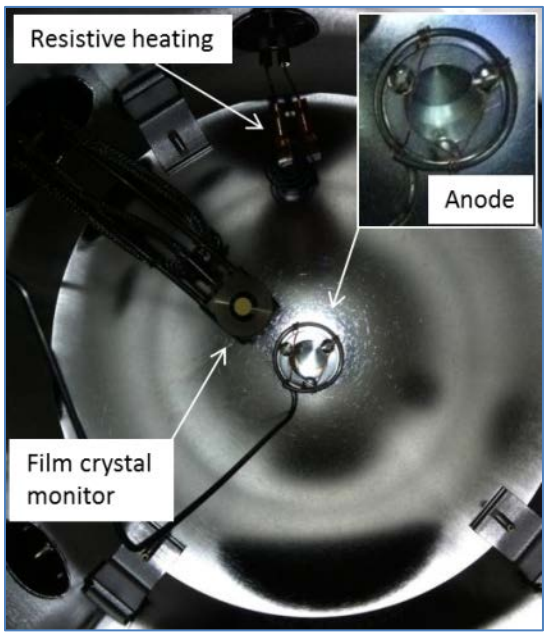

Figure 3: The opening in the baffle has been reduced by inserting a small pieza of Stainless Steel. It has been attached by means of three screws. The inset in the picture shows a closer view of it and the anode in front.

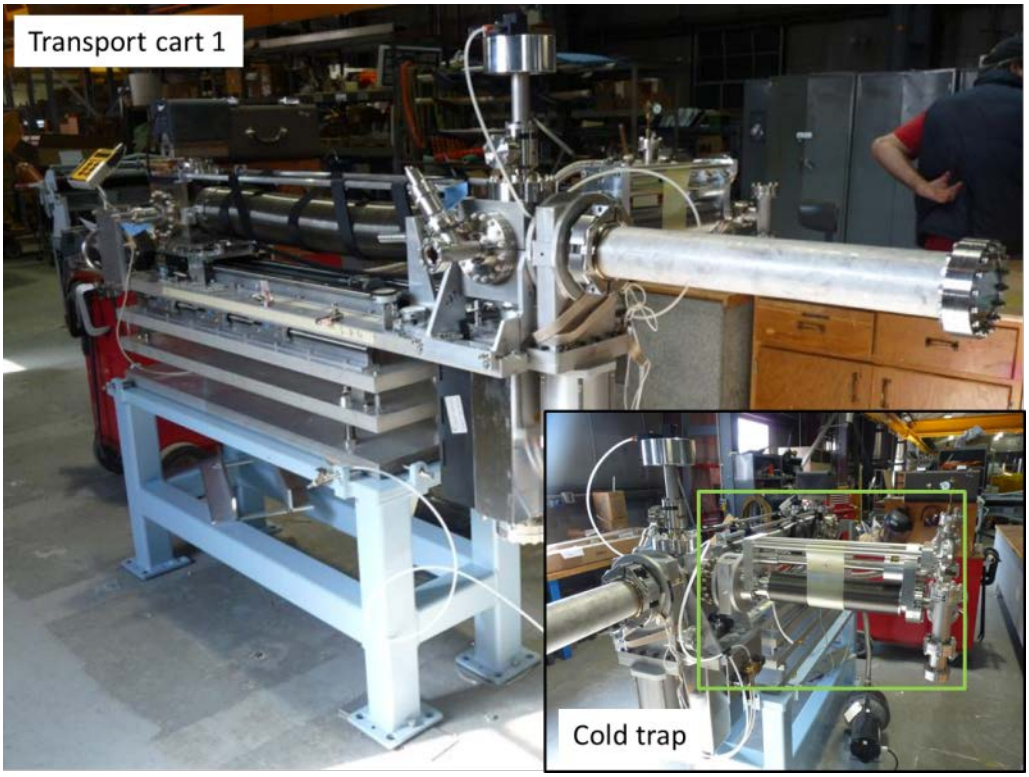

Figure 4:Transport cart 1 used to transfer cathode to the gun. As shown in the inset picture, this transport cart has been equipped with a cold trap finger to protect the cathode during the process of transferring.

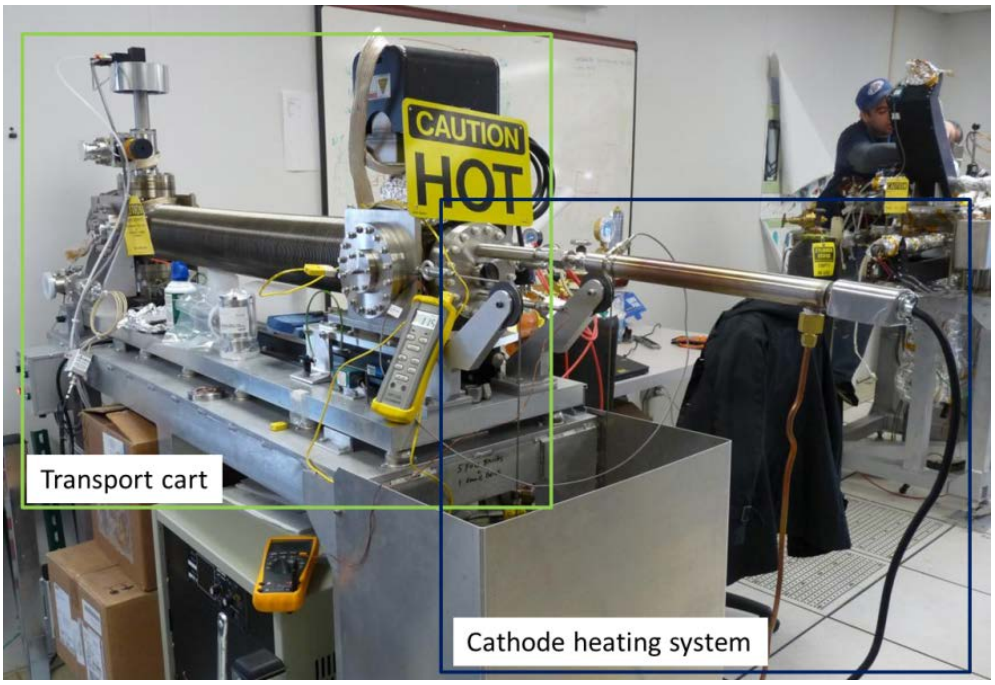

Figure 5:Transport cart used to transfer the cathode from the deposition chamber to the gun. The heating system used to heat the substrate while heating is highlighted with a blue box.

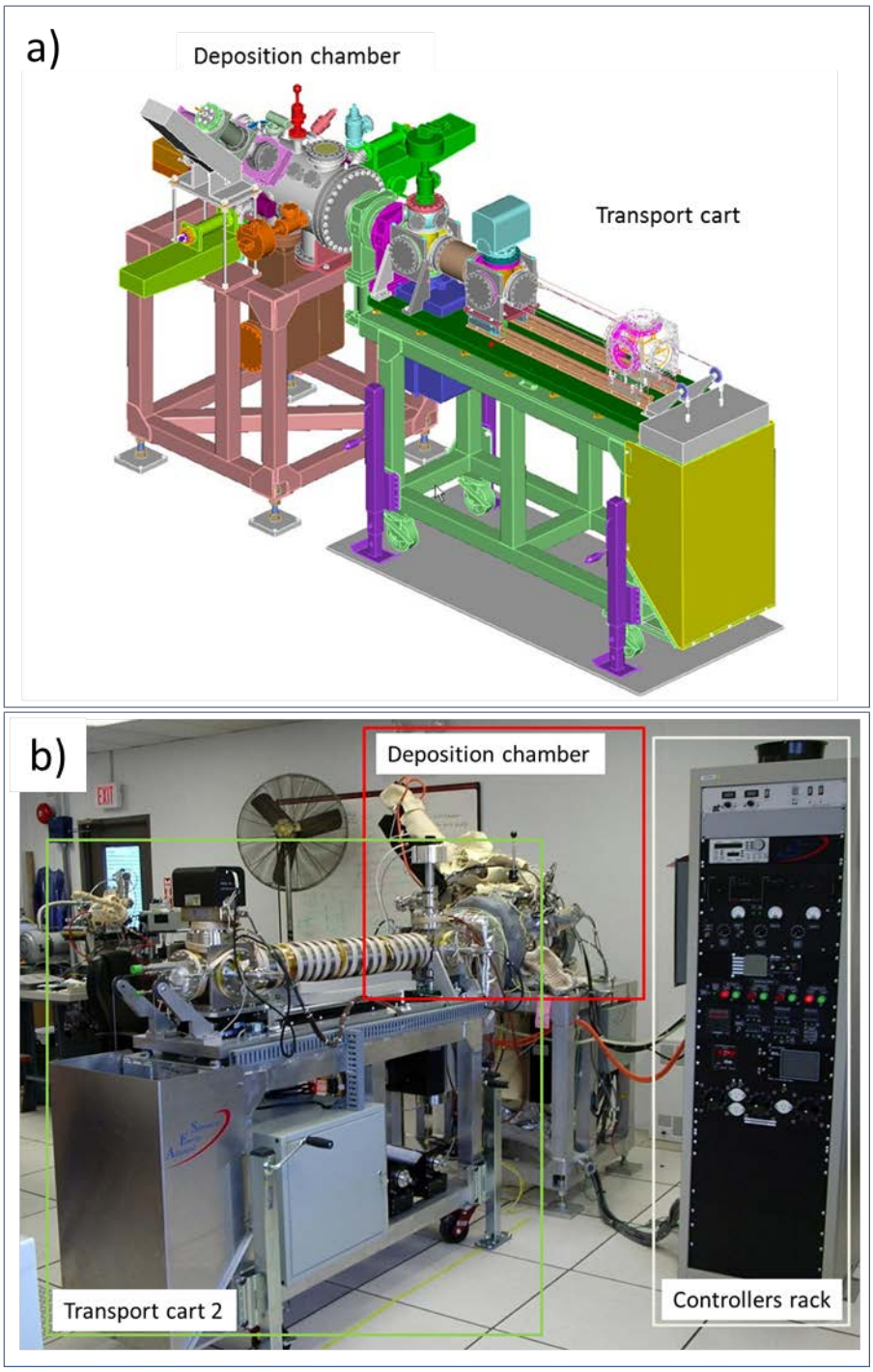

Figure 6: a) Drawing of the attachment between transport cart and deposition chamber. b) Picture of the attachment of transport cart and deposition chamber. The controller rack is also shown in the picture.

Attachment 8.3 – System Description

C-A-OPM 18.5.3, "Procedure for Growing of Bi-Alkali (K2CsSb) Cathodes for ERL SRF Gun," covers the necessary steps needed for bi-alkali cathode growth on a cathode insert for the transport cart and the deposition chamber is necessary to establish and maintain ultra-high vacuum (UHV) and particle-free environment. Both systems will be baked in advance to get low 10^{-10} mbar (low partial pressure of H_2O, CO and CO_2 is desired) and placed in the same clean room in building 912, where they will be assembled for cathode deposition. Then the growing of the cathode will be undertaken. Once the cathode is ready, it will be stored in the transport cart so it can be disconnected from the deposition chamber and taken to the SRF gun location. Two transport carts will be available to assure that while one cathode is used for beam experiments, the second one can be re-grown.

Brief Description of the System

The deposition system, see Figure 1, consists of a main chamber with a number of ports to accommodate view ports, RGA, crystal monitor, anode, heating system and the load-lock. In addition, three arms, one for each of the sources (Sb, K and Cs) are attached to it through gate valves. The main chamber is pumped by ion and NEG pumps and is equipped with pressure gauges. The sources can be inserted into the main chamber in front of the cathode using the manipulators holding the sources. The metals are deposited onto the substrate through thermal evaporation of these sources. The type of sources used are Alvatec of type S which are shown in Figure 2. An aperture in the metal barrier between the substrate and the sources limit the area of deposition on the substrate. This aperture has been reduced to avoid pernicious effects of lateral deposition in the stalk (possible multipacting). Figure 3 shows the set up of this aperture. A low power light beam (green laser pointer) irradiates the cathode and the electrons emitted are collected by the anode in front of the cathode (also shown in Figure 3). The current measured at the anode is used for determining the QE of the cathode

The transport cart contains the cathode substrate and can be moved between the deposition chamber and the gun while maintaining UHV conditions in the vicinity of the substrate/cathode. The transport cart is used then to transfer the cathode between the deposition chamber and the gun. It consists of a UHV section where the cathode is transferred and an intermediate section that is disconnected from one (deposition Chamber/gun) and connected to the other (gun/deposition chamber). There are two transport carts that allow parallel processing of cathode growth and cathode insertion into the gun. Figure 4 shows the first transport cart and Figure 5 shows the second transport cart. As shown in this late figure, the substrate can be heated or cooled by flowing gas through a pipe in contact with the substrate. Finally Figure 6 shows the attachment between transport cart and deposition system.

If you are using a printed copy of this procedure, and not the on-screen version, then you MUST make sure the dates at the bottom of the printed copy and the on-screen version match.
The on-screen version of the Collider-Accelerator Department Procedure is the Official Version.
Hard copies of all signed, official, C-A Operating Procedures are available by contacting the ESSHQ Procedures Coordinator, Bldg. 911A

ATTACHMENT

18.5.3.a ERL Key Personnel for Photocathode Development

C-A OPM Procedures in which this Attachment is used.		
18.5.3		

Hand Processed Changes

HPC No.	Date	Page Nos.	Initials

Approved: _____***Signature With Date on File***_____
Collider-Accelerator Department Chairman Date

L. Hammons

18.5.3.a ERL Key Personnel for Photocathode Development

	Role	Extension	Pager	Cell
Erdong Wang	Photocathode Liason Physicist	8023		
Triveni Rao	Photocathode Project Leader	5072		
Huamu Xie	Graduate Student	2588		
Tom Seda	Photocathode Technician, Research Space Manager	8488		631-708-9076 (personal)
Robert Kellermann	Photocathode Technician	8362		
Dan Weiss	Vacuum Engineer	4463	4157	
Andrew Steszyn	Vacuum Engineer	8051	7623	
Gary McIntyre	ERL Project Engineer	7037		631-834-4428
Scott Seberg	SRF Technical Supervisor	7313		631-402-4230
Dimitry Kayran	ERL Liason Physicist	5136		
Lee Hammons	ERL Operations Supervisor	2891		631-339-0344

18.5.4 Procedure for Transporting a Grown Bi-Alkali (K2CsSb) Cathode and its' Assembly into the ERL SRF Gun

Hand Processed Changes

HPC No.	Date	Page Nos.	Initials

Approved: ***Signature with Date on File***
Collider-Accelerator Department Chairman Date

E. Wang

18.5.4 Procedure for Transporting a Grown Bi-Alkali (K2CsSb) Cathode and its' Assembly into the ERL SRF Gun

1. Purpose:

This procedure covers steps necessary for transporting a grown bi-alkali cathode and its insertion into the gun for beam experiments.

1.1 Both systems will be baked in advance to get low 10^{-10} mbar (low partial pressure of H_2O, CO and CO_2 is desired). Once the cathode has been grown (the growth of the cathode is covered in a separate procedure), it is stored in the transport cart so it can be disconnected from the deposition chamber and taken to the SRF gun location. There the cart is connected to the gun, see Figure 2, and the inter-connect is baked. During this bake, care should be taken to maintain the temperature of the cathode close to 30°C. Upon successful vacuum bake, gates valve can be opened and the cathode can be inserted into the gun for beam experiments, see Figure 3. Two transport carts will be available so while one cathode is used for beam experiments in ERL gun, the second one can be deposited.

2. Responsibilities

2.1 The ERL Liaison Physicist, or the SRF Group Leader, or designee, is responsible for implementing the procedure.

2.2 Representatives from each involved group (photocathode, SRF mechanical, vacuum), are responsible to make sure that their systems are ready and properly interfaced with other systems.

2.3 The Operations Specialist, or designee, is responsible for confirmation that all paperwork is in order and the system is ready before the test can start.

2.4 Coordination with riggers will be needed if the transport cart is to be moved from Bldg. 966 to 912. The Operations Specialist, or designee, is responsible for such coordination.

3. Prerequisites

3.1 Perfect coordination of personnel responsible for the transport cart and the group responsible for the preparation and running the ERL gun is needed to ensure maintaining of ultra-high vacuum (UHV) particle-free environment.

3.2 Before the transport cart is disconnected from the deposition system, the ERL Liaison Physicist or the SRF Group Leader must make sure that:

1) ERL gun is ready to accept the transport cart.
2) Portability of controllers and needed equipment is assured.

3) A portable clean room is installed to facilitate free particulate-free environment during connection of the transport cart and the gun.

4. Precautions

4.1 If an abnormal condition arises while the movement of equipment is in progress, stop the movement and discuss the situation with the on-duty CAS Watch or Head of the ESSHQ Division.

5. Procedure

5.1 Preliminary remarks:

Connect all vacuum gauge cables and interlock cables. Ensure that all data loggers (pressure, temperature, etc) are operational for both, the transport cart and the gun.

Note:
The electrical connectors to the cathode and e-gun isolation valves shall not be installed until the intermediate bake is complete.

Verify that vacuum in the transport cart and in the gun is in the UHV regime with low partial pressures of H_2O, CO and CO_2 are achieved. Low 10^{-10} mbar pressures in both systems are desirable. Prior to removing the transport cart from the clean room for move to the e-gun, the gate valve should be covered and protected from particulate.

5.2 Detailed steps:
In the following, identification of components of the system refer to the attached ERL e-gun Vacuum System Schematic, BNL C-AD Drawing 010605174.

5.2.1 Roll transport cathode cart and ups/control cabinet into cave adjacent to base stand. *(Be prepared with a portable ion pump power supply in case Pressure rise too much)*. Ion pump must remain powered during move. Both Ion pumps, the larger pump near the cathode (IPT1) and the smaller one at the back of the stalk (IPT2), should remain on.

5.2.2 Make sure lower sliding assembly on cathode insertion cart is fully retracted and pinned to the drive screw. (This allows for clearance between gun valve (GVB1) and cathode cart valve (GVT1) when loading onto base stand)

5.2.3 Attach 4 slings rated for a min of 1000 lbs each to the 4 swivel hoist rings identified “LP” on the top of the cathode cart.

5.2.4 Using portable lift device ready over 1000 lbs, lift cathode insertion cart from the rolling platform and carefully lower it onto the tooling balls atop the base stand. Secure in place at the four corners using ¼-20 bolts and coupling nuts.

5.2.5 Install vacuum gauge and pump cables and interlock cables to the cathode assembly. Turn on ion pumps and gauges so data can be logged.

5.2.6 Install the 4x4 portable clean room over the cathode assembly and up against the back of the gun vacuum vessel. Install the 2x4 portable clean room as an anteroom. Set up portable turbo outside clean room with clean flex hose penetrating into the clean room.

Clean and blow down all the critical components and surfaces until acceptable particle counts are observed. Cover all surfaces within the portable tent that do not process to particulate free requirement with clean room sheet wrap and seal/secure with clean room tape. Remove protective covers from gate valve flanges.

Remove protective covers from gate valve flanges.

5.2.7 Pre clean the CeFix seal and chain clamp and stage all necessary clean tools and torque wrench for mating the cathode to the gun valve. Once load lock zone is particulate free, move valves together using lower lead screw on cathode insertion cart (T). Install CeFix seal and chain clamp. Torque clamp for a Cefix NW 100 chain clamp is 319 in-lbs (36Nm).

5.2.8 Install portable turbo pump on the RAV installed on the cathode gate valve. Evacuate the volume between the two gate valves (GVT1-GVB1) and leak check.

5.2.9 Install low particulate heaters on the gate valves and the intermediate volume/chain clamp. Low Pressure heaters are desirable but not required as there is no exposure to the beamline.

5.2.10 Pull pin from lower lead screw assembly on cathode insertion cart to allow the entire cart assembly to axially float on its lower rails with respect to the gun cryostat. This is very important so that no loads from cryostat wall fluctuations are transmitted to the cart.

5.2.11 Attach LN2 supply and return lines to the cold shield piping. Connect the cathode cart burst disk (BDT2) to the vent header. Start flow, and cool down shield.

5.2.12 Insert shield into the beam line axis position. Take up cable slack in the main cathode slide assembly using large wheel and remove safety pin. Then drive cathode into shielded position and insert safety pin to freeze position.

5.2.13 Bake the load lock (L) at 200 C for 24 hours. At the end of the temperature ramp down turn on the Ion Pump (IPL1). Close the valve isolating the turbo just prior to opening gun isolation valve (GVB1). Leave the turbo running and also leave the portable flow both in place, as this process will soon need to be reversed.

5.2.14 Once bakeout is complete, take up cable slack on main cathode slide assembly and remove safety pin. Fully retract cathode and safety pin in place.

5.2.15 Extract cold shield and close manual gate valve (MVT1).

5.2.16 Open main valves to gun and cathode cart (GVT1 and GVB1). Regardless of whether the gun is cold or warm, the gun isolation valve (GVB1)

should be opened first to allow the gun to reduce the pressure in the load lock (L) to a low value. Then the cathode gate valve (GVT1) may be opened.

5.2.17 Stop LN2 flow to cold shield and allow shield to warm.

5.2.18 At the stop stanchions (located on either side of the beam line at the downstream end of the cathode cart assembly) make sure spring control nuts are fully retracted (towards the gun cavity). Also make sure the lateral dial indicator is fully retracted.

5.2.19 Turn on the "futek" load cell monitor or connect load cell to scope. (Either method will work).

5.2.20 Take up cable slack on main cathode slide assembly and pull safety pin. Slowly drive the cathode towards the cavity interface until contact is detected on the load cell readout.

5.2.21 Release the lateral dial indicator and zero out.

5.2.22 Zero out the axial dial indicator.

5.2.23 Using 9/16" adjusting nuts on the stop stanchions, bring both springs into contact with the cathode cart sliding assy. (hand tight only)

5.2.24 Now you can use a wrench to slowly and evenly add compression to both springs until the axial dial indicator reads "A Delta of .030" (which means you have forced the cathode cart sliding assembly back away from the cavity by .030"). During this operation the lateral dial indicator should remain within plus or minus .005". If not, the springs are not being loaded evenly.

5.2.25 Now using slide assembly control wheel ease the cathode slide assembly toward the gun very slowly until the axial dial indicator reads zero once again. Then repeat previous step. If you cannot reach zero, proceed to next step.

5.2.26 Now all vacuum loads in the cathode sliding assembly have been assumed by the two stop springs, and you should be able to slack the cables approx. ½". During the previous steps the cathode has never moved more than .030" from the interface and will end up somewhere in between contact with the cavity and .030" clearance when cables are slacked.

5.2.27 Close cathode clamp to 100 lbs of force as shown on the strain gauge readout.

5.2.28 Install LN2 supply and return lines onto cathode piping and start flow to cool cathode.

5.2.29 Cathode should only be cooled if the gun is also cold, otherwise it will pump condensable gases.

The SRF gun is now ready for operations with the cathode.

6. Documentation

None

7. References

None

8. Attachments

8.1 ERL e-gun Vacuum System Schematic, BNL C-AD Drawing 010605174.

8.2 a) Overview of the system attachment for cathode transfer.
b) Details of the parts of the equipment.

8.3 Pictures of the cathode stalk. The graphic shows how the insertion of the stalk will take place in the gun.

Attachment 8.1

ERL e-gun Vacuum System Schematic, BNL C-AD Drawing 010605174

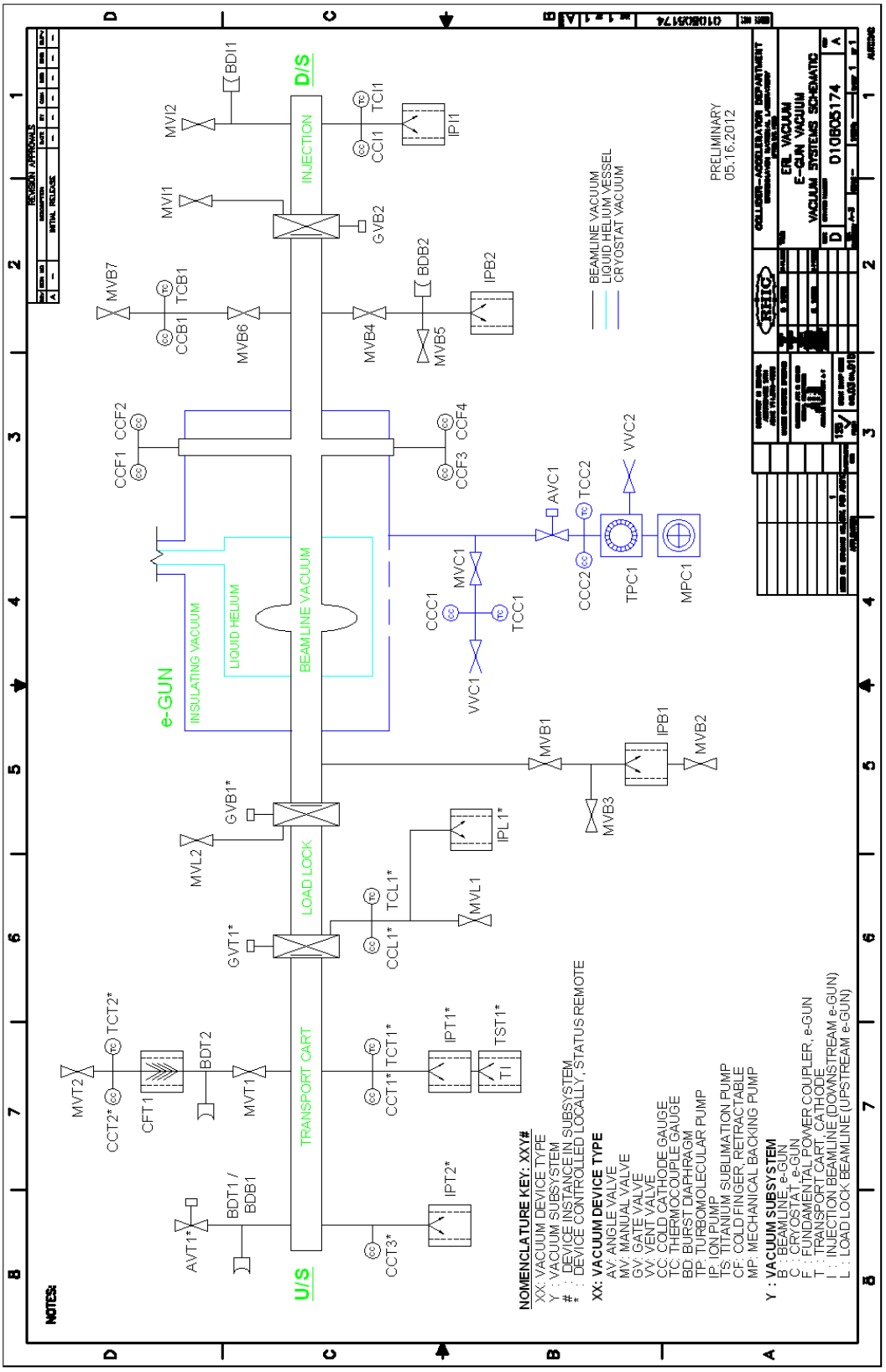

Attachment 8.2

a) Overview of the system attachment for cathode transfer
b) Details of the parts of the equipment.

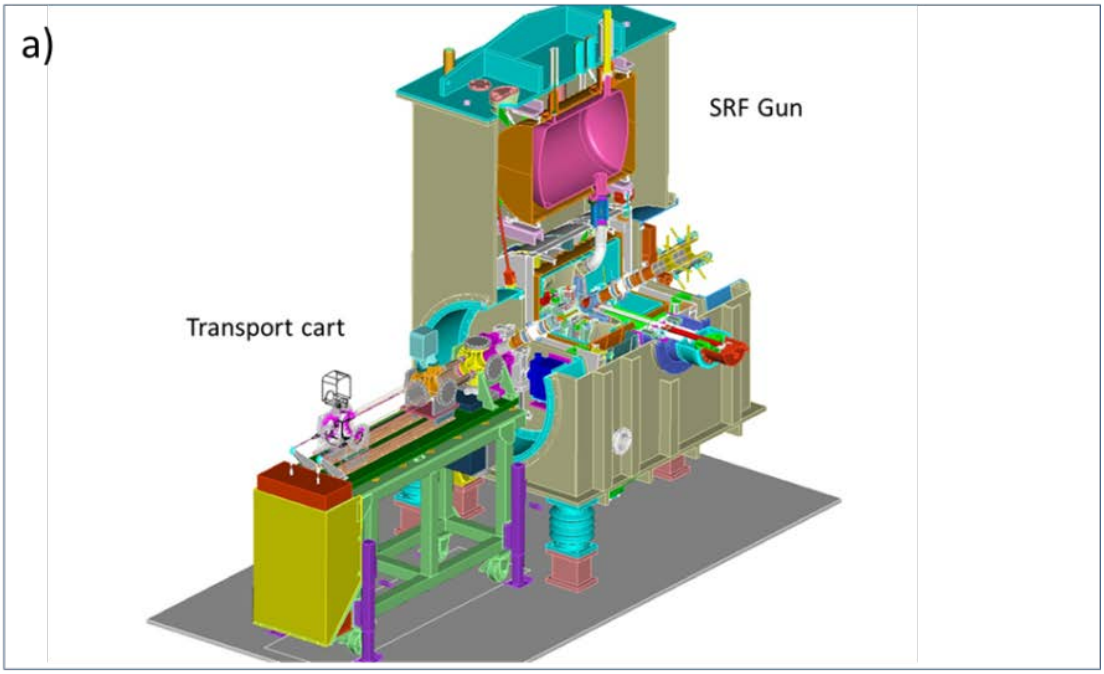

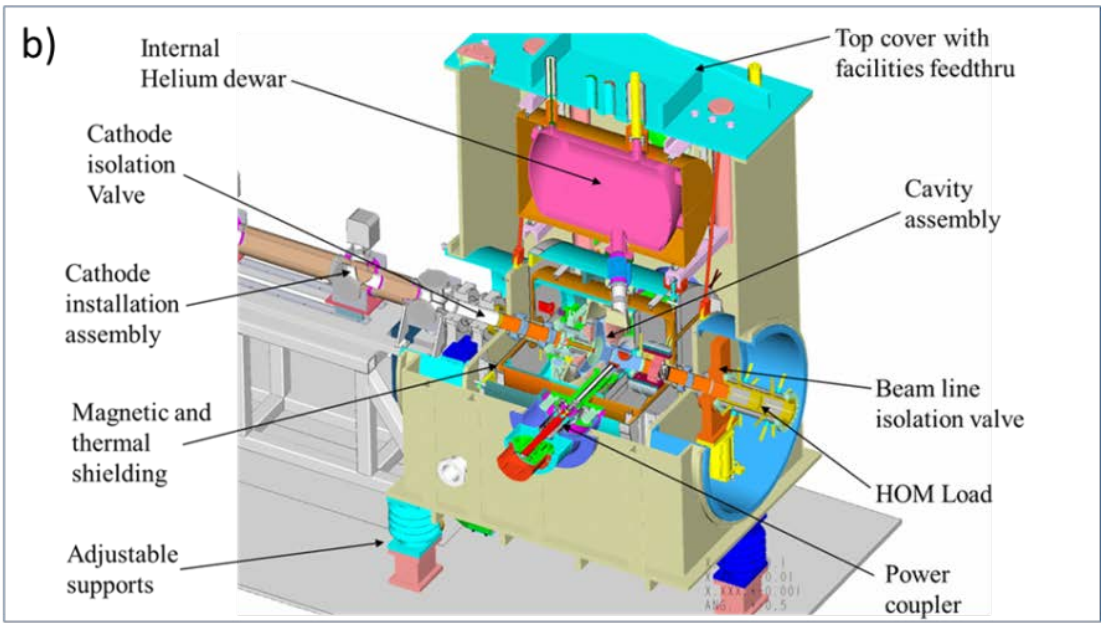

Attachment 8.3

Pictures of the cathode stalk. The graphic shows how the insertion of the stalk will take place in the gun.

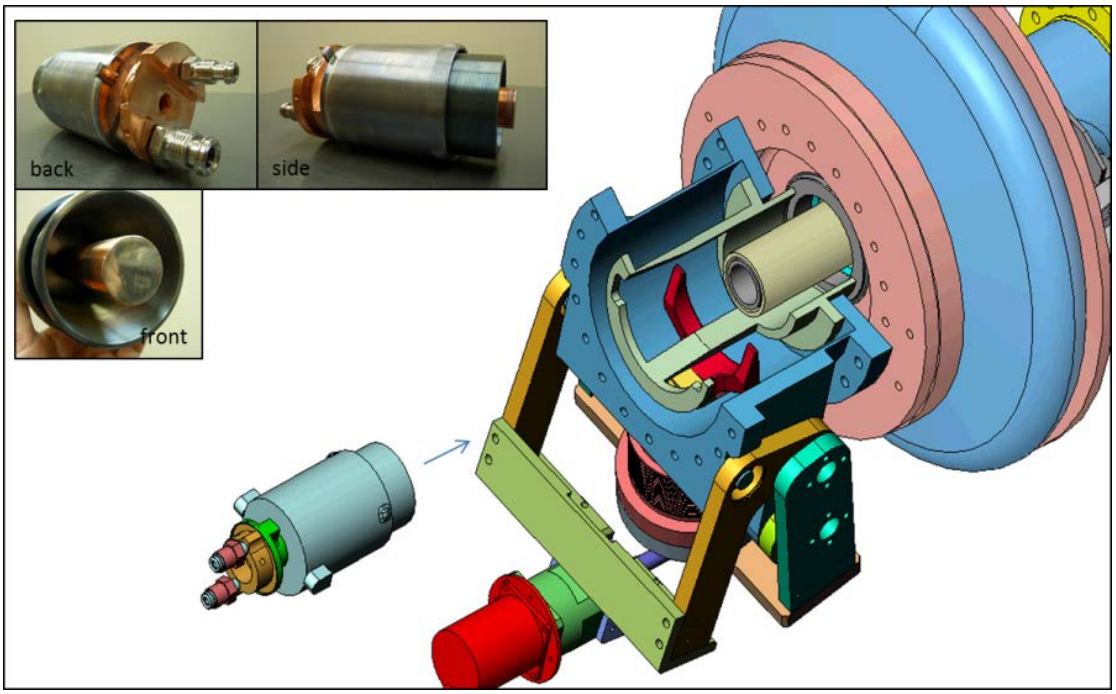

If you are using a printed copy of this procedure, and not the on-screen version, then you MUST make sure the dates at the bottom of the printed copy and the on-screen version match.
The on-screen version of the Collider-Accelerator Department Procedure is the Official Version. Hard copies of all signed, official, C-A Operating Procedures are available by contacting the ESSHQ Procedures Coordinator, Bldg. 911A

C-A OPERATIONS PROCEDURES MANUAL

18.5.5 ERL Plan for Maintenance Management

Hand Processed Changes

HPC No.	Date	Page Nos.	Initials

Approved: _____***Signature with Date on File***_____
Collider-Accelerator Department Chairman Date

L. Hammons

18.5.5 ERL Plan for Maintenance Management

1. Purpose

Maintenance of the Energy Recovery LINAC and associated equipment shall occur throughout the course of the operating cycle of the accelerator. Because beam operations are expected to occur for approximately two days each week, guidelines for tracking repair issues as well as accommodating preventative and routine maintenance issues are herein outlined based on OPM 2.10 – Maintenance Management Policy. All equipment shall be maintained according to standard practices developed by the responsible support group. Support group supervisors are responsible for the maintenance of their assigned systems and equipment. The responsibility includes, as appropriate based on operational and ES&H risk, the following:

1.1 Development of a master list of support groups who carry out maintenance responsibilities (see Attachment 1).

1.2 Development of preventative and predictive maintenance procedures that includes periodic inspection, testing and maintenance, post-maintenance testing, and implementation of seasonal requirements.

1.3 Development of associated record-keeping that includes periodic maintenance requirements, list of past maintenance actions, and warrantee information.

1.4 Performance of corrective maintenance including analysis and determination of required spares inventory.

1.5 Determination of required personnel training including BNL offered, C-A specific, and group OJT training.

2. Responsibilities

2.1 Individual Responsibilities

2.1.1 The ERL Project Head and ERL Operations Coordinator, along with the consultation of the Accelerator R & D Research Space Manager shall be responsible for coordinating the prioritization, start date and time, and allotted duration of maintenance activity as agreed upon with the responsible support groups.

2.1.2 The ERL Operations Coordinator shall assure that maintenance activities end at a prescribed and agreed upon time that supports ERL beam operations. The ERL Operations Coordinator in consultation with the Support Group Supervisors shall compile a list of completed maintenance items including any work that was attempted or completed. This list shall be made accessible to the ERL team. The ERL Operations Coordinator shall report to the ERL shift leader when maintenance activities have ended.

2.1.3 Supervisors of the various support groups are responsible for developing lists of equipment requiring maintenance, and to determine accurate estimates of the time required to perform each task including equipment testing. The individual supervisor maintenance lists are expected to be shared with the other supervisors during the weekly maintenance coordination meeting.

2.1.4 Supervisors of the various support groups are responsible to assure that the day-to-day maintenance activities are performed in a timely fashion in concert with the ERL operations schedule. A list of support groups and their associated systems is contained in Attachment 1. Supervisors (or designees) are responsible for informing the ERL Project Head or the ERL Operations Coordinator of all intended work, any problems encountered, and provide the Project Head or ERL Operations Coordinator with a final summary of the actual work completed. IF delays arise during maintenance or if any unexpected problems are encountered such that planned work is impacted or a new job must be undertaken, THEN the Supervisor must inform either the ERL Project Head or ERL Operations Coordinator immediately.

2.1.5 C-A Support Groups are responsible for performance of preventive and corrective maintenance for equipment or systems under their purview. They are responsible for reporting problems encountered to the Support Group Supervisor.

2.1.6 ERL Shift Leaders and ERL Control Room Technicians are responsible for documenting equipment requiring repair or maintenance in the course of operations in the ERL eLog or other appropriate system logs.

2.1.7 ERL Shift Leaders along with ERL control room technicians are responsible for restarting ERL beam operations using OPM procedures after maintenance periods

.

2.2 Work Planning Safety Procedure to Be Followed During Maintenance Activities

2.2.1 C-A OPM 2.28, "C-A Procedure for Enhanced Work Planning" shall be followed.

2.2.2 For work at C-A involving non-C-A Departments or Divisions, C-A OPM 1.11, "Department Requirements for Interactions with C-A", shall be followed.

3. Prerequisites

None

4. Precautions

None

5. Procedure

None

6. Documentation

None

7. References

3.1 C-A OPM 2.10, "Maintenance Management Policy"
3.2 C-A OPM 2.28, "C-A Procedure for Enhanced Work Planning"
3.3 C-A OPM 1.11, "Department Requirements for Interactions with C-A"

8. Attachments

4.1 ERL Maintenance Responsibilities List

Attachment 1

ERL Maintenance Responsibilities List

SYSTEM	RESPONSIBLE GROUP
Electrical Distribution	Power Distribution Group
Water and Air Systems	Water Systems Group
Cryogenics	Cryogenics Systems Group
Vacuum	Vacuum Systems Group
Beam Instrumentation & Beam Components	Instrumentation Systems
Magnet Power Supplies	Electrical Systems
Control Systems (MPS, RF, Laser, PS, Software)	Controls Systems
RF Systems	RF Group
Superconducting RF Systems	SRF Group / RF Group
SRF Mechanical Systems (Photocathode Insertion)	SRF Mechanical Group
Control Room Workstations	Controls Group
Security Systems	Access Controls Group

If you are using a printed copy of this procedure, and not the on-screen version, then you MUST make sure the dates at the bottom of the printed copy and the on-screen version match.
The on-screen version of the Collider-Accelerator Department Procedure is the Official Version. Hard copies of all signed, official, C-A Operating Procedures are available by contacting the ESSHQ Procedures Coordinator, Bldg. 911A

18.5.6 Dry Run Testing Guidelines for Commissioning

Hand Processed Changes

HPC No.	Date	Page Nos.	Initials

Approved: _____***Signature with Date on File***_____
Collider-Accelerator Department Chairman Date

L. Hammons

18.5.6 Dry Run Testing Guidelines for Commissioning

1. Purpose

1.1 The purpose of this procedure is to provide guidance for testing and validation of controls systems in preparation for commissioning in the Gun-to-Dump phase of the Energy Recovery LINAC. This procedure identifies the controls systems that will require testing (see Attachment 1) as well as the responsible individuals who shall validate each system for operational readiness. The procedure also outlines the basic process for organizing the testing effort as well as for reporting on testing progress, results, and final validation.

1.2 This procedure is not intended to provide specific validation criteria or testing procedures. Each responsible individual or group shall develop appropriate testing and validation regimens that shall be followed to provide assurance of operational readiness. This procedure requires that the responsible individuals or groups shall report the progress of testing at agreed upon intervals throughout the dry run period and indicate the state of system readiness at the end of dry run.

2. Responsibilities

2.1 The ERL Project Leader, in consultation with the ERL Operations Coordinator and the Responsible Subsystem Specialists and Groups, as identified below, shall decide on a schedule for performing the dry run. The schedule shall allow adequate time for testing of subsystems before beam operations are planned. Whenever possible, the schedule shall also allow time for follow up activities that may be necessary to complete testing or remediate systems that require additional repair or configuration before operational readiness is assured.

2.2 The ERL Project Leader, in consultation with the ERL Operations Coordinator and the Responsible Subsystem Specialists and Groups, as identified below, shall identify the specific systems that require testing. Since not all systems may be required for operation, the team consisting of the Project Leader, Operations Coordinator, and Subsystem Specialists shall identify and prioritize those systems required for operation in advance of the dry run and beam operations and allow sufficient time for testing of these systems. This set of systems may change over the course of testing and systems may be added or removed from the set as needs and priorities for the beam run change, but a minimum set of systems shall be identified that meets the requirements for effective beam operations based on the judgment of the ERL Project Leader, with consultation from the project team.

2.3 At the discretion of the ERL Project Leader, validation of certain subsystems may occur outside of the dry run testing period such as equipment validated prior to the dry run, or equipment tested separately from the dry run. The conditions under which such testing has occurred and the configuration of the subsystem under test should be based on the expected beam conditions and operational requirements of the project, and shall be clearly specified when the operational readiness of the subsystem is reported.

2.4 The Responsible Subsystem Specialists and Groups shall be responsible for developing the appropriate testing and validation regimens in consultation with the ERL Project Leader and ERL Operations Coordinator. These regimens shall take into account the operational requirements of the project, and the goal of the regimen shall be to provide assurance of operational readiness based on the expected beam conditions and operational requirements of the project.

2.5 The Responsible Subsystem Specialists and Groups shall be responsible for reporting on the progress of their respective testing and validation efforts at intervals agreed upon by the project team and in the manner agreed on by the team. The Subsystem Specialists shall develop the testing regimen required to assure operational readiness of the system based on operational requirements and expected beam conditions. The test conditions and equipment configuration shall, to the extent possible, be equivalent to the operating conditions under which the equipment shall be expected to function during beam operations. The Subsystem Specialists shall be responsible for determining and reporting the final status and readiness of the system to the ERL Project Leader or the ERL Operations Coordinator.

3. Prerequisites

None

4. Precautions

None

5. Procedure

5.1 Before the beginning of Gun-to-Dump beam commissioning, the project team consisting of the ERL Project Leader, the ERL Operations Coordinator, and the Subsystem Specialists shall decide which subsystems will be needed for beam operations and therefore included in dry-run testing.

5.2 The team shall decide on a time before beam operations during which to conduct the dry run. The time should be sufficiently far in advance of beam operations to allow completion and reporting of testing activities as well as follow up, repair, and mitigation work as necessary whenever possible. The team should agree and document expected due dates for the completion of dry run tests. If a particular test requires other tests to be completed as a prerequisite, then set the due dates of the downstream activities for some time after the prerequisite tests.

5.3 A schedule and manner for reporting on the progress of testing shall be agreed upon and documented by the project team so that dry run progress can be tracked and follow up, repair, and mitigation activity can be pursued as necessary. For example, the team may decide that progress on each subsystem will be reported at the end of each day or on a more frequent basis. The team may elect to report the results in the ERL elog, on a wiki page, on a website, or in some other manner agreed upon by the team. It is helpful if all members of the team can easily access the reporting tool and provide the necessary updates.

5.4 At the end of the dry run, all Subsystem Specialists shall report the final status of their systems and their operational readiness to the ERL Project Leader or the ERL Operations Coordinator. This final status shall be documented and systems that require further repair or configuration shall be tracked to completion by the Project Leader or the Operations Coordinator as well as the Subsystem Specialist.

6. Documentation

6.1 The time and schedule of the dry run shall be documented in a manner decided by the ERL Project Leader and accessible to the project team.

6.2 A list of subsystems to be tested and individuals responsible for testing or reporting the results shall be documented in a manner decided by the ERL Project Leader and accessible to the project team.

6.3 The progress of testing shall be documented in a manner decided by the ERL Project Leader and accessible to the project team at intervals agreed upon by the team.

6.4 The completion and final status of the dry-run testing for each subsystem shall also be documented.

7. References

None

8. Attachments

8.1 Attachment 1 - Listing of ERL Subsystems and Subsystem Specialists or Groups

Attachment 1

Listing of ERL Subsystems and Subsystem Specialists or Groups

The following is a listing of subsystems that should be considered for ERL dry-run testing along with the subsystem specialists and groups. The project team, consisting of the ERL Project Leader, the ERL Operations Coordinator, and the Subsystem Specialists and Groups, shall decide which of these subsystems will be needed for beam operations and therefore included in dry-run testing along their priority and the schedule for testing.

Infrastructure

Alarm Display (L. Hammons, J. Jamilkowski)

Data Logging/LogView (D. Kayran, W. Xu, J. Jamilkowski)

eLog (L. Hammons)

ERL Consoles (A. Fernando)

ERL Operations Website (L. Hammons)

Front-End Computers (J. Jamilkowski, P. Kankaya)

GPMs for Data Monitoring (D. Kayran, L. Hammons, W. Xu, K. Smith)

Systems

Conventional Magnet System Power Supply Controls (R. Lambiase)

Cryogenic Systems (R. Than)

HTS Magnet System Power Supply Controls (R. Lambiase)

Laser Timing and Controls (B. Sheehy, P. Kankaya, K. Smith)

HLRF Systems (N. Lalodaukis, W. Xu)

LLRF Systems (K. Smith, W. Xu)

Machine Protection System

- ICT (M. Wilinski, C. Ho, J. Jamilkowski)
- DCCT (T. Miller, C. Ho, J. Jamilkowski)
- Cathode Position (L. DeSanto, C. Ho, J. Jamilkowski)
- Pepper Pot (T. Miller, C. Ho, J. Jamilkowski)
- Profile Monitors (T. Miller, C. Ho, J. Jamilkowski)
- Halo Scrapers (T. Miller, C. Ho, J. Jamilkowski)
- PMTs (T. Miller, C. Ho, J. Jamilkowski)
- IC Beam Loss Monitor (T. Miller, C. Ho, J. Jamilkowski)
- BPMs (T. Miller, C. Ho, J. Jamilkowski)
- Laser (B. Sheehy, C. Ho, J. Jamilkowski)
- Cryogenic Input (R. Than, C. Ho, J. Jamilkowski)
- Water Systems (Water Group, C. Ho, J. Jamilkowski)
- Vacuum Systems (D. Weiss, A. Steszyn, C. Ho, J. Jamilkowski)
- HLRF Systems - Arc Detectors: Klystron, FPC (N. Lalodaukis, W. Xu, C. Ho, J. Jamilkowski)
- LLRF Systems (K. Smith, W. Xu, C. Ho, J. Jamilkowski)
- HTS Magnet System (R. Lambiase, C. Ho, J. Jamilkowski)
- Machine Mode Permit Configurations (D. Kayran, C. Ho)
- Temperature Interlock System (Instrumentation Group)

Vacuum Systems (D. Weiss, A. Stesyzn)

Water Systems (Water Group)

Instrumentation

Beam Loss Monitor System (T. Miller)

BPMs (T. Miller)

Camera Systems (T. Miller)

DCCT (T. Miller)

Faraday Cups (T. Miller)

Halo Scrapers (T. Miller)

Integrating Current Transformer (M. Wilinski)

Motion Systems (L. DeSanto)

Profile Monitors (T. Miller)

If you are using a printed copy of this procedure, and not the on-screen version, then you MUST make sure the dates at the bottom of the printed copy and the on-screen version match.
The on-screen version of the Collider-Accelerator Department Procedure is the Official Version. Hard copies of all signed, official, C-A Operating Procedures are available by contacting the ESSHQ Procedures Coordinator, Bldg. 911A

18.5.7 Integrating Current Transformer (ICT) Interlock Response Procedure

Hand Processed Changes

HPC No.	Date	Page Nos.	Initials
_____	_____	_____	_____
_____	_____	_____	_____
_____	_____	_____	_____

Approved: _____***Signature with Date on File***_____
Collider-Accelerator Department Chairman Date

L. Hammons

18.5.7 Integrating Current Transformer (ICT) Interlock Response Procedure

1. Purpose

1.1 The purpose of this procedure is to provide ERL operators with guidance for responding to interlocks caused by the ICT input to the Machine Protection System (MPS).

1.2 Background

The ICT system provides a measurement of the beam current in the accelerator as well as an output voltage that is used as an input to the Machine Protection System (MPS). The output voltage corresponds to the beam current. Should the voltage produced by the ICT system exceed a preset threshold in the MPS, the MPS system will interlock the laser, causing beam generation in the gun to cease. Nominally, this occurs when the beam current exceeds the limitation imposed by the Accelerator Safety Envelope (ASE) for Low-Power ERL operation (OPM 2.5.6). This limit is 3.5 μA

2. Responsibilities

2.1 The ERL Shift Leader and ERL Control Room technicians are responsible for implementing this procedure.

2.2 The ERL Shift Leader or ERL Operations Coordinator as well as the ICT System Expert and MPS System Expert are responsible for inspecting the configuration of the system and making adjustments or changes as necessary.

3. Prerequisites

3.1 The ICT system must have been properly configured for beam operation.

3.2 The MPS voltage threshold must have been appropriately set before beam operations commence.

4. Precautions

None

5. Procedure

5.1 IF an interlock of the MPS occurs due to the ICT voltage input, THEN the operator shall attempt to determine the current just before the interlock occurred.

5.1.1. Record this current in the log.

5.1.2 Confirm that the configuration of the ICT as well as the MPS voltage threshold is correct by checking each of the configuration parameters in the ERL experimental setup checklist. Confirm that each parameter is correctly set in PET.

5.1.1.1 Correct any parameters that are incorrect.

5.1.1.2 Reset the MPS interlock.

5.1.1.3 Resume beam operations.

5.1.3 IF the ICT is correctly configured, confirm the QE of the cathode and the maximum laser power.

5.1.3.1 Confirm that the correct value of QE of the photocathode has been considered in the calculation of the maximum laser power.

5.1.3.2 Confirm that the actual maximum laser power based on the QE estimate is correct.

5.1.3.3 Adjust the maximum laser power if necessary.

5.1.3.4 Adjust the macrobunch frequency and macrobunch width appropriately for the maximum laser power and desired beam conditions.

5.1.3.5 Reset the MPS interlock.

5.1.3.6 Resume beam operations.

5.1.4 IF the ICT configuration, the QE, the laser power, and the macrobunch parameters have been checked, are correctly set, and continued interlocks occur, reduce the number of microbunch pulses and continue beam operation.

5.1.4.1 Confer with the ICT and MPS system experts to investigate issues with the ICT system.

6. Documentation

ERL Experimental Logbook

7. References

7.1 Experimental Setup Procedure for ERL Low-Power Test

8. Attachments

None

If you are using a printed copy of this procedure, and not the on-screen version, then you MUST make sure the dates at the bottom of the printed copy and the on-screen version match.
The on-screen version of the Collider-Accelerator Department Procedure is the Official Version.
Hard copies of all signed, official, C-A Operating Procedures are available by contacting the ESSHQ Procedures Coordinator, Bldg. 911A

C-A OPERATIONS PROCEDURES MANUAL

18.5.8 ERL: Gun-to-Dump Commissioning Sequence

Hand Processed Changes

HPC No.	Date	Page Nos.	Initials

Approved: _____***Signature with Date on File***_____
Collider-Accelerator Department Chairman Date

D. Kayran

18.5.8 ERL: Gun-to-Dump Commissioning Sequence

1. Purpose

1.1 The purpose of this procedure is to provide the sequence of activities during ERL: Gun-to-Dump (G2D) commissioning. This document outlines the operating conditions of the G2D at each step of commissioning, but may not outline the specific commissioning tasks that should be performed at each step. This document also provides radiological safety guidance and establishes hold points for safety reviews prior to progression to the next commissioning step.
This procedure applies to all personnel involved in commissioning of the ERL.

1.2 Definitions

- Integrating Current Transformer (ICT): Device BTS-ICT2, which measures the total charge in the electron beam pulse.
- DC Current Transformer (DCCT): Device, which measures direct current (DC).
- Beam position monitor (BPM): Nonintrusive device, which measures position of the beam inside the vacuum chamber.
- QE: Quantum efficiency of cathode

2. Responsibilities

2.1 ERL Project Leader

- Determines if beam parameters are of sufficient quality.

2.2 ERL Shift Leader

- Commissions ERL gun-to-dump transport lines within the operating envelope established by the ERL operating procedures.
- Delivers beam from the gun to the beam dump.

2.3 RCD Representative

- Reviews surveys and dose number obtained via his RCTs.

2.4 Chair of C-AD RSC

- Reviews and approves each step of commissioning sequences.
- Recommends next step of commissioning in terms of intensity and transport line configuration.

2.5 Head of C-AD Accelerator Research and Development (ARD) Division

- Approves progression from each phase in the commissioning sequence.

2.6 C-AD Physicists, Engineers and Technical Staff

- Operate and maintain the systems for which they are responsible.
- Provide guidance to, and assist the ERL Project Leader and ERL Shift Leader in operating the accelerator subsystems.

2.7 ERL Operations Supervisor

- Provide administrative oversight for commissioning activities.
- Serves as a liaison between the ERL project and C-A.

3. Prerequisites

3.1 DOE onsite office authorizes initial commissioning.

3.2 The RSC check-off list must be complete before any beam operations are started. Supplements or new check-off lists must be complete before tests progress.

3.3 The ASSRC check-off list must be complete.

3.4 Minimum number of personnel necessary to staff the experiment have been trained.

3.5 Each system leader has indicated that their system is ready for operations:

- Instrumentation
- Controls
- Water
- RF
- Cryogenics
- MPS
- Laser

4. Precautions

4.1 Only Shift Leader is permitted to operate ERL with beam.

4.2 Beam average current above 5 uA could damage the vacuum chamber. Beam average current shall be limited by the laser power and ICT interlock during the first stages of commissioning before stable operation is established.

4.3 Subsystem experts can operate the equipment for which they are responsible. They shall perform machine studies only with the knowledge and approval of the on-duty Shift Leader.

4.4 The actual sequence of the commissioning activities and steps described in this procedure are contingent on the actual state of the ERL observed during commissioning and may be modified and/or determined unnecessary by the Chair of the Radiation Safety Committee in consultation with the Project Leader.

4.5 Performing fault studies and Hold Points shall not be skipped.

5. Procedure

5.1 ***SRF Gun with Beam Commissioning - The objective of this phase is establishing stable operation of SRF gun with beam.***

> **Warning**
> Average beam power should be limited as low as practically possible. Beam energy is limited by Gun voltage with the current measured by ICT. First injection line dipole is off.

5.1.1 The ARD Division Head with concurrences from the ESSHQ Division Head gives ERL Project Leader permission to proceed with ERL beam-to-dump commissioning.

5.1.2 Based on cathode QE measurements, set laser power to provide gun current 5 uA.

5.1.3 Apply stable RF fields, measure stability of amplitude, phase and frequency. Objective: 2.5 MeV beam energy. Minimum required: 1 MeV beam energy.

5.1.4 Measure dark current from cathode vs RF gun voltage with opened downstream gate valve.

5.1.5 Test available beam instrumentation with beam.

5.1.6 Measure charge out of gun as a function of gun-to-laser phase. Based on measurements result, select phase of gun operation.

5.1.7 Conduct cathode QE measurements at low average current.

5.1.8 Establish stable electron beam from the gun.

5.1.9 Conduct fault studies fault studies for the beam faults in the gun to Faraday cup beam line transport.

> **Caution**
> Hold point: RSC Chair will review fault study results and routine surveys determine what requirements, if any, are necessary to allow operation up to the next hold point. Requirements will be placed on a Change Control Form (CCF) attached to the already complete RSC check-off list.

5.2 ***ERL Injection Line Commissioning - The objective of this phase is to transport beam through the ERL injection line***

Warning

Average beam power should be limited as low as practically possible. Beam energy is limited by Gun voltage with the current measured by ICT.

Note

Complete all items on the CCF of the RSC check-off list before operating the second dipole.

5.2.1 Establish 5uA stable beam from the gun.

5.2.2 Turn on 1st injection line dipole.

5.2.3 Test beam loss monitors (BLMs) with beam.

5.2.4 Measure beam position using BPM and/or the minimum-beam-losses technique using BLMs.

5.2.5 Measure beam energy and current.

5.2.6 Conduct fault studies in second segment of the beam transport.

Caution

Hold point: RSC Chair will review fault study results and routine surveys determine what requirements, if any, are necessary to allow operation up to the next hold point. Requirements will be placed on a Change Control Form (CCF) attached to the already complete RSC check-off list.

Note

Complete all items on the CCF of the RSC check-off list before operating the second dipole.

5.2.7 Set 2nd injection line dipole based on energy measurements. (3rd dipole is off)

5.2.8 Test beam loss monitors (BLMs) with beam.

5.2.9 Measure beam position using BPM and/or the minimum-beam-losses technique using BLMs.

5.2.10 Measure beam energy and current.

5.2.11 Transport beam through the magnetic center of quadrupole components in Zigzag magnets (varying the quadrupole coil current and monitoring beam position at BPM)

5.2.12 Comparing each BPM sum signal will give an idea of beam losses in transport line (10% accuracy will be acceptable).

5.2.13 Compare ICT and DCCT signals.

5.2.14 Conduct fault studies for the third segment of the beam transport.

Caution

Hold point: RSC Chair will review fault study results and routine surveys determine what requirements, if any, are necessary to allow operation up to the next hold point. Requirements will be placed on a Change Control Form (CCF) attached to the already complete RSC check-off list.

5.3 ***Extraction Line and Beam Dump Commissioning - The objective of this phase is transport beam from the gun to the dump.***

Warning

Average beam power should be limited as low as practical possible. Beam energy is limited by Gun voltage with the current measured by ICT.

Note

Complete all items on the CCF of the RSC check-off list before operating the second dipole.

5.3.1 Establish 5uA stable beam from the gun.

5.3.2 Set rest of the beam line magnets to their operating current based on energy measurement from the first dipole.

5.3.4 Transport beam through extraction line to the beam dump.

5.3.5 Test extraction line BLMs and DCCT.

5.3.6 Measure beam dump current.

5.3.7 Optimize beam distribution in the beam dump by adjusting optics of extraction line.

5.3.8 Minimize beam losses by adjusting correctors and beam optics.

5.3.9 Conduct fault studies for the transport line that has not been examined previously.

Caution

Hold point: RSC Chair will review fault study results and routine surveys determine what requirements, if any, are necessary to allow operation up to the next hold point. Requirements will be placed on a Change Control Form (CCF) attached to the already complete RSC check-off list.

5.4 ***High Intensity Studies - The objective of this phase is to demonstrate stable gun operation at minimum 30 mA average current.***

Note

Complete all items on the CCF of the RSC check-off list before operating the second dipole.

5.4.1 Establish Gun to dump operation at 5 uA beam current (10 Watts power).

5.4.2 Adjust beam optics and correctors to minimize beam losses.

5.4.3 Establish 50 uA beam current (100 Watts power).

a. Check beam losses. If necessary correct orbit to reduce beam losses in injection then extraction line. Compare ICT and DCCTs signals.
b. Check beam dump performance. If necessary, adjust optics in extraction line to provide more equal beam distribution in beam dump.
c. Conduct radiation studies around beam line.
d. Examine dose from dump and on roof if possible.
e. Conduct fault studies, as appropriate, and routine surveys for documentation of radiation levels.

Caution

Hold point: RSC Chair will review fault study results and routine surveys determine what requirements, if any, are necessary to allow operation up to the next hold point. Requirements will be placed on a Change Control Form (CCF) attached to the already complete RSC check-off list.

Note

Complete all items on the CCF of the RSC check-off list before operating the second dipole.

5.4.4 Establish 500 uA (1kW) gun to dump.

a. Check beam losses. If necessary correct orbit to reduce beam losses in injection then extraction line. Compare ICT and DCCTs signals.
b. Check beam dump performance. If necessary adjust optics in extraction line to provide more equal beam distribution in beam dump.
c. Conduct radiation studies around beam line.
d. Examine dose from dump and on roof if possible.
e. Conduct fault studies.

Caution

Hold point: RSC Chair will review fault study results and routine surveys determine what requirements, if any, are necessary to allow operation up to the next hold point. Requirements will be placed on a Change Control Form (CCF) attached to the already complete RSC check-off list.

Note

Complete all items on the CCF of the RSC check-off list before operating the second dipole.

5.4.5 Establish 5 mA (10kW) gun-to-dump.

a. Check beam losses. If necessary correct orbit to reduce beam losses in injection then extraction line. Compare ICT and DCCTs signals.
b. Check beam dump performance. If necessary adjust optics in extraction line to provide more equal beam distribution in beam dump.
c. Conduct radiation studies around beam line.
d. Examine dose from dump and on roof if possible.
e. Conduct fault studies.

Caution

Hold point: RSC Chair will review fault study results and routine surveys determine what requirements, if any, are necessary to allow operation up to the next hold point. Requirements will be placed on a Change Control Form (CCF) attached to the already complete RSC check-off list.

Note

Complete all items on the CCF of the RSC check-off list before operating the second dipole.

5.4.6 Establish 30 mA (60kW) gun to dump.

a. Check beam losses. If necessary correct orbit to reduce beam losses in injection then extraction line. Compare ICT and DCCTs signals.
b. Check beam dump performance. If necessary adjust optics in extraction line to provide more equal beam distribution in beam dump.
c. Conduct radiation studies around beam line.
d. Examine dose from dump and on roof if possible.
e. Conduct fault studies and routine surveys.

6. Documentation

ERL Experimental Logbook

7. References

None

8. Attachments

None

If you are using a printed copy of this procedure, and not the on-screen version, then you MUST make sure the dates at the bottom of the printed copy and the on-screen version match.
The on-screen version of the Collider-Accelerator Department Procedure is the Official Version.
Hard copies of all signed, official, C-A Operating Procedures are available by contacting the ESSHQ Procedures Coordinator, Bldg. 911A

C-A OPERATIONS PROCEDURES MANUAL

18.6.1 Responding to Chipmunk Alarms and Interlocks

Hand Processed Changes

HPC No.	Date	Page Nos.	Initials
_____	_____	_____	_____
_____	_____	_____	_____
_____	_____	_____	_____

Approved: _____***Signature with Date on File***_____
Collider-Accelerator Department Chairman Date

L. Hammons

18.6.1 Responding to Chipmunk Alarms and Interlocks

1. Purpose

1.1. The purpose of this procedure is to provide operations personnel with instructions on responding to chipmunks that generate alarms and that can disable or interlock beam in the ERL.

1.2. Acronyms and Definitions:

1.2.1 ACS: Access Controls System.
1.2.2 Chipmunk: Device used to monitor radiation levels, in millirem/hour.
1.2.3 Chipmunk Alarm Level: Dose Rate at which an alarm will be generated.
1.2.4 Chipmunk Interlock Level – Dose Rate that will disable a critical device.
1.2.5 DEVICE READ ERROR - Applications code is unable to get a controller report for a device.
1.2.6 Disable Beam: Make area secure from beam using appropriate critical device.
1.2.7 Dose Rate: Magnitude of radiation field, normally reported in millirem/hour.
1.2.8 DOSE RATE HIGH: When the calculated Dose Rate exceeds the assigned Alarm Level.
1.2.9 DNA: Does Not Answer - no communication with a device.
1.2.10 HP/RCT: Health Physics Technician
1.2.11 ICT: Integrating Current Transformer
1.2.12 Interlock: Action by the ACS, which disables the beam. (i.e. critical devices).
1.2.13 LOW COUNT: Device is not reporting minimum counts generated by an internal “keep alive” source.
1.2.14 Parity Error: Bad transmission of data. For this procedure, Chipmunk data.
1.2.15 RSC: Radiation Safety Committee
1.2.16 RS LOTO: Radiation Safety Lockout/Tagout, performed by an authorized person that prevents beam from being transported to a given area by disabling a critical device.
1.2.17 PASS: Particle Accelerator Safety System

2. Responsibilities

2.1 Operations personnel are responsible for investigating alarms and interlocks not caused by known faults or approved tuning.

2.2 ERL operators are responsible for monitoring the chipmunk dose rates and ensuring that the average level does not exceed the alarm limit in any hour under normal conditions.

2.3 The on-duty shift leader is responsible for approving and documenting tune and other configuration changes in response to chipmunk alarms and interlocks.

2.4 The on-duty HP technician is responsible for performing surveys called for in this procedure.

2.5 The C-AD ESSHQ Associate Chair, or Division Head, shall declare a reportable occurrence under the conditions described in 5.1.1.1.4.

2.6 The RSC chair may authorize temporary written exceptions to this procedure, which the chair shall review within two working days with the ESSHQ Division Head.

3. Prerequisites

3.1 The chipmunks and associated monitoring and communication systems shall be capable of generating and displaying alarms.

3.1.1 ERL operation may be permitted if the chipmunk monitoring or alarming hardware or software is unable to function ONLY under the following conditions:

3.1.1.1 An Access Controls group member is called in to fix the problem.

3.1.1.2 No ERL chipmunks have interlocked.

3.2 The on-duty shift leader shall be trained in C-A OPM 10.1 "Occurrence Reporting and Processing of Operations Information".

3.3 Qualified and trained operations personnel.

4. Precautions

None

5. Procedures

Note:
ERL chipmunks include the following:

Name	Device	Location
NM170	NMON170.erl	North Gate Buss Block
NM171	NMON171.erl	Inside North Gate
NM172	NMON172.erl	1 MW Waveguide
NM173	NMON173.erl	50 kW Waveguide
NM174	NMON174.erl	West Wall Cryo Port
NM175	NMON175.erl	Inside South Gate
NM176	NMON176.erl	South Gate West Wall
NM177	NMON177.erl	ERL X-Ray Detector 1 - *For ERL fault studies and experimental use*
NM178	NMON178.erl	ERL X-Ray Detector 2 - *For ERL fault studies and experimental use*
NM181	NMON181.erl	ERL Gun Beam Monitor
NM182	NMON182.erl	ERL Dump Beam Monitor

A reference map is available at the following URL:
http://www.cadops.bnl.gov/AGS/Operations/Maps/images/maps/ERL_layout_chip.gif

Note that this map is a reference only and should not be considered 100% accurate!

5.1 Response to Chipmunk Alarms

Note 1:
The chipmunk interlock level for each chipmunk is recorded in the *ChipmunkViewer* application.

Note 2:
During the low-power testing phase of the ERL program, several adjustments of the alarm and interlock levels may be required in order to properly calibrate chipmunk response.

Note 3:
Chipmunks NM177 and NM178 are provided strictly for experimenter use to detect X-rays.

5.1.1 Response to alarms from chipmunks NM171, NM172, NM173, NM174, and NM175:

5.1.1.1 IF a DOSE RATE HIGH alarm is received, determine the dose seen by the chipmunk within the last hour, along with the beam current measured by the integrating current transformer (ICT).

5.1.1.1.1 The chipmunk's dose is recorded by the *ChipmunkViewer* application code in 5-minute intervals (i.e., 12 times an hour), [wait for the last interval to be completed]. Take the average of the previous 12 complete measurements to determine the average hourly dose rate and record in the ERL experimental logbook (do not include the measurement interval in which the interlock occurred).

5.1.1.1.3 Determine where the beam loss is occurring, noting the settings of magnets and insertion devices, and record this information along with dose and beam current in the ERL experimental logbook.

Have the RCT survey near the unit(s) in order to confirm the readings and determine if there was partial or full-time occupancy in the area(s) of interest during the last hour.

Note:
All accessible or occupied areas within about 10 to 100 feet should be checked. The chipmunk should have been located to "see" the highest dose rate possible, or be responsive to the highest dose rate possible. If RCT feels the chipmunk is shadowed by nearby shielding, then he/she shall walk around and survey the levels in the area.
DO NOT climb fences or barriers.

a) If the readings are determined to be false, THEN the chipmunk is considered to be malfunctioning. DISABLE the beam and restore only after the malfunction has been cleared.

5.1.1.1.4 The shift leader shall alert the C-A Facility Manager if it is believed that:

a) A RADIATION WORKER was given an unexpected exposure GREATER THAN 100 mrem as a result of these brief high-dose rates.

b) A NON-RADIATION WORKER was given an unexpected exposure GREATER THAN 20 mrem as a result of these brief high-dose rates.

c) IF the C-A Facility Manager declares a DOE reportable occurrence, THEN follow the manager's instructions in addition to completing the rest of this procedure.

5.1.1.1.5 ATTEMPT to determine the cause of the alarms if they are not caused by tuning or a known fault.

5.1.1.1.6 IF the DOSE RATE HIGH alarm is determined to be real and not associated with tuning or a known fault, THEN reduce the beam intensity so the chipmunk(s) are below the alarm limit.

Note 1:
Since chipmunks NMO170, NMO176, NMO181, and NMO182 are not in occupied areas during beam operations, hourly dose rates for these chipmunks need not be calculated if they generate alarms.

Note 2:
If the chipmunk alarms become a "nuisance", contact the RSC Chair to examine whether the chipmunk alarm level can be increased.

5.1.2 Response to alarms from chipmunks NM170, NM176, NMO181, and NMO 182:

5.1.2.1 IF a DOSE RATE HIGH alarm is received, record which chipmunk generated the alarm and the dose registered by the device.

5.1.2.1.1 The chipmunk's dose is recorded by the *ChipmunkViewer* application code in 5-minute intervals (i.e., 12 times an hour), [wait for the last interval to be completed]. Take the average of the previous 12 complete measurements to determine the average hourly dose rate and record in the ERL experimental logbook (do not include the measurement interval in which the interlock occurred).

5.1.2.1.2 Determine the beam current registered by the ICT before the alarm. Record the current along with the dose in the ERL experimental logbook.

5.1.2.1.3 Determine where the beam loss is occurring, noting the settings of magnets and insertion devices, and record this information along with dose and beam current in the ERL experimental logbook.

5.2 Response to Chipmunk Interlocks

5.2.1 Problems associated with chipmunk devices or the chipmunk monitoring or communications system:

5.2.1.1 IF chipmunk monitoring or alarming hardware or software is not operating, then the ERL may continue to circulate beam until an interlock occurs.

5.2.1.1.1 This operational requirement includes the following front-end computer cfe-912erl-vme2.

5.2.1.1.2 This operation requirement also includes the chipmunk monitoring system in PASS.

5.2.1.1.3 ERL operators shall call a member of the Access Control group to fix the problem and restore monitoring capability.

5.2.1.2 IF three interlocks occur in any one-hour period due to a chipmunk device failure (i.e. interlocks determined NOT to have been generated by elevated radiation levels), the chipmunk is considered to be malfunctioning. IF an interlocking chipmunk is found to be malfunctioning, THEN disable the beam to the ERL.

5.2.1.2.1 Restore beam only after the malfunction has been cleared or the chipmunk has been replaced.

Note 1:
The chipmunk interlock level for each chipmunk is recorded in the *ChipmunkViewer* application.

Note 2:
During the low-power testing phase of the ERL program, several adjustments of the alarm and interlock levels may be required in order to properly calibrate chipmunk response.

5.2.2 Response to interlocks from chipmunks NMO171, NMO172, NMO173, NMO174, and NMO175:

5.2.2.1 IF an interlock occurs in any one-hour period, THEN operators shall record which chipmunk generated the alarm along with the dose registered by the device.

5.2.2.1.1 The chipmunk's dose is recorded by the *ChipmunkViewer* application code in 5-minute intervals (i.e., 12 times an hour), [wait for the last interval to be completed]. Take the average of the previous 12

complete measurements to determine the average hourly dose rate and record in the ERL experimental logbook (do not include the measurement interval in which the interlock occurred).

5.2.2.1.2 Determine the beam current registered by the ICT before the interlock. Record the current along with the dose in the ERL experimental logbook.

5.2.2.1.3 Determine the location where beam losses have occurred, noting the settings of magnets and insertion devices, and record this information along with the dose and beam current in the ERL experimental logbook.

5.2.2.1.4 Resume beam operations and continue unless two previous interlocks have already occurred within the same one-hour period.

5.2.2.2 IF more than two interlocks occur in any one-hour period, then,

5.2.2.2.1 Leave the beam off.

5.2.2.2.2 Calculate the dose seen by methods of 5.2.2.1.1.

5.2.2.2.3 Follow 5.2.2.1.2 and 5.2.2.1.3 of this procedure.

5.2.2.2.4 Contact the RSC Chair and the Head of ESSHQ Division for guidance on adjust alarm and interlock levels.

5.2.2.2.5 Resume beam operations only after instructed to do so by the RSC Chair along with the Head of ESSHQ Division.

Note 1:
Since chipmunks NMO170, NMO176, NMO181, and NMO182 are not in occupied areas during beam operations, hourly dose rates for these chipmunks need not be calculated if they generate interlocks.

Note 2:
If the chipmunk alarms become a “nuisance”, contact the RSC Chair to examine whether the chipmunk interlock level can be increased.

5.2.3 Response to interlocks from chipmunks NMO170, NMO176, NMO181, and NMO182:

5.2.3.1 IF an interlock occurs, then,

5.2.3.1.1 Record the dose registered by the device.

a) The chipmunk’s dose is recorded by the *ChipmunkViewer* application code in 5-minute

intervals (i.e., 12 times an hour), [wait for the last interval to be completed]. Take the average of the previous 12 complete measurements to determine the average hourly dose rate and record in the ERL experimental logbook (do not include the measurement interval in which the interlock occurred).

5.2.3.1.2 Record the beam current registered by the integrating current transformer (ICT) before the interlock.

5.2.3.2 IF more than three interlocks occur in any one-hour period caused by elevated radiation levels (see 5.2.1.2), then beam operations may continue, but contact the RSC Chair to request review.

6. Documentation

6.1 ERL Experimental Logbook

7. References

7.1 C-A-OPM 10.1, "Occurrence Reporting and Processing of Operations Information".

7.2 C-A-OPM 6.1.2, "Responding to Chipmunk Interlocks".

7.3 C-A-OPM 6.1.3, "Responding to Chipmunk Alarms".

7.4 C-A-OPM-ATT 9.1.16.b, "RS LOTO Log Sheet".

7.5 C-A-ATT 9.5.1.a, "ALARA Program Organization for C-A".

8. Attachments

None

If you are using a printed copy of this procedure, and not the on-screen version, then you MUST make sure the dates at the bottom of the printed copy and the on-screen version match.
The on-screen version of the Collider-Accelerator Department Procedure is the Official Version.
Hard copies of all signed, official, C-A Operating Procedures are available by contacting the ESSHQ Procedures Coordinator, Bldg. 911A

C-A OPERATIONS PROCEDURES MANUAL

18.6.2 ALARA Strategies for Tuning during ERL Operations

Text pages 2 through 5

Hand Processed Changes

HPC No.	Date	Page Nos.	Initials

Approved: _____***Signature / Date on File***_____
Collider-Accelerator Department Chairman Date

L. Hammons

18.6.2 ALARA Strategies for Tuning During ERL Operations

1. Purpose

1.1 The purpose of this procedure is to outline the ALARA strategy for ERL operation. This procedure is intended to serve as the template for the development of procedures that will detail the appropriate responses to ALARA thresholds (i.e., "triggers"). When a threshold is exceeded, an alarm will appear and a response is required by the on-duty ERL shift leader to reduce beam losses. Exceeding certain trigger thresholds may cause an interlock of the ERL beam, preventing beam from circulating around the machine until the interlock condition is cleared. The ERL is a new accelerator that will employ several different subsystems for monitoring beam loss and providing machine protection from these losses. These systems shall require initial calibration in the context of ERL operation to determine appropriate alarm thresholds.

1.2 The scope of this procedure is that it is intended to be an ALARA procedure and not a Radiation Safety Procedure.

1.3 The ERL shall employ three different subsystems for monitoring radiation losses:

1.3.1 Beam Position Monitors (BPMs):

These instruments are distributed throughout the machine and are used to monitor beam position throughout a machine evolution. The BPM system shall generate an alarm or interlock the beam in the machine based on deviations beyond a preset thresholds from nominal beam positions throughout the machine. The BPM system is intended to provide a rapid response to deviation in nominal beam positions throughout the machine that could signal eminent beam losses.

1.3.2 DC Current Transformers (DCCTs):

These instruments are located at the injector stage and the dump stage of the machine and are intended to monitor the difference between the injected current and the extracted current. Large differences between injected and dumped beam may indicate beam losses in the ERL, and the system shall provide an alarm or cause a beam interlock should the difference go beyond a preset threshold.

1.3.3 Beam Loss Monitors (BLMs):

The beam loss monitor detectors will be installed at locations where beam loss is considered most likely. The beam loss monitoring system consists

of a variety of different detectors including photomultiplier tubes (PMTs), PIN diodes, Heliax ion chambers, RHIC ion chambers, and IR cameras that monitor losses and provide inputs to the BLM system that, in turn, can generate alarms or interlock the beam in the ERL as appropriate based on preset thresholds and operating conditions.

1.4 Since the ERL is a new machine, and various subsystems will be used to monitor beam losses, calibration of these systems will be required to determine beam loss limits and alarm and interlock thresholds. This calibration effort shall be conducted during the initial stages of ERL operation, and a study plan shall be devised that specifies the steps required. The appropriate limits and thresholds, along with the study plan shall be documented in the ERL logbook.

1.5 The system incorporates two levels of protection:

1.5.1 an alarm generated by the system which serves to warn the operator that losses are high and that investigation is required to correct the loss condition.

1.5.2 an interlock loss limit that will turn off the beam to protect equipment from potential damage. An interlock will require that the loss condition be corrected before normal running can resume.

2. Responsibilities

2.1 The on-duty ERL shift leader is responsible for the execution of this procedure.

2.2 The liaison physicist for ERL is responsible for:

2.2.1 determining loss limits for setting alarm and interlock threshold values to activate alarms in the ERL control room.

2.2.2 changing loss limits as operations evolve,

2.2.3 determining appropriate instrumentation and instrumentation configurations for determination of loss throughout a machine evolution,

2.2.4 determining appropriate software scaling factors as may be appropriate or required.

2.3 The Instrumentation group is responsible for maintaining the instrumentation used for monitoring beam losses as described above.

2.4 The ERL Operations Supervisor is responsible for

2.4.1 verifying that the appropriate alarm thresholds are incorporated in the loss monitoring software, and

2.4.2 maintaining the documentation to this procedure that tracks the evolution of loss limits and scaling constants determined by the ERL liaison physicist.

3. Prerequisites

3.1 Periodic review of alarm and interlock thresholds (triggers).

3.2 Software that is appropriately configured to generate alarms when threshold values are exceeded.

3.3 Calibration of instrumentation used for beam loss monitoring by Instrumentation Group personnel and during ERL operations at the discretion of the ERL liaison physicist.

3.4 Verification of instrumentation by ERL operations personnel as appropriate.

4. Precautions

4.1 Failure to execute this procedure correctly may result in excessive downtime, equipment activation, or equipment damage.

5. Procedure

5.1 Initial Calibration of the Radiation Loss Monitoring Systems

5.1.1 Initial stages of ERL commissioning shall address calibration of the various radiation loss monitoring systems. This calibration work shall take place using low beam power and shall be outlined in a study plan developed by the ERL liaison physicist that details specific procedures for calibrating each subsystem.

5.1.2 After calibration, loss thresholds shall be documented and included, along with the study plan, in the ERL logbook to serve as the basis for subsequent ERL operation.

5.2 Review of the ERL loss thresholds

5.1.1 Before the start of ERL operations, the liaison physicist shall review the threshold triggers for beam loss based on the thresholds determined by initial calibration of the system.

5.1.2 The ERL Operations Supervisor shall ensure that the thresholds for ERL radiation monitoring are correctly documented and are based on the latest determinations of the ERL liaison physicist.

5.3 Operations response to ERL loss alarms and interlocks:

5.3.1 IF a High Loss alarm occurs, THEN the ERL Shift Leader shall initiate the following:

5.3.1.1 Determine where in the machine the loss is occurring.

5.3.1.2 Correct the problem.

5.3.2 IF an interlock occurs, THEN the ERL Shift Leader shall initiate the following:

5.3.2.1 Determine where in the machine the loss occurred.

5.3.2.2 Correct the problem.

5.3.2.3 Restore beam operation at reduced beam intensity if necessary to verify that the problem has been corrected.

6. Documentation

6.1 The ERL shift leader shall record responses to all alarms and interlocks of section 5.3 in the ERL logbook.

6.2 The study plan for calibration, loss limits, and thresholds shall be documented in the ERL logbook.

7. References

None

8. Attachments

None

If you are using a printed copy of this procedure, and not the on-screen version, then you MUST make sure the dates at the bottom of the printed copy and the on-screen version match.
The on-screen version of the Collider-Accelerator Department Procedure is the Official Version.
Hard copies of all signed, official, C-A Operating Procedures are available by contacting the ESSHQ Procedures Coordinator, Bldg. 911A

C-A OPERATIONS PROCEDURES MANUAL

18.7.2 ERL Cryogenic System Vacuum Skid Operation

Text Pages 2 through 5

Hand Processed Changes

HPC No.	Date	Page Nos.	Initials

Approved: _____***Signature on File***_____ _____
Collider-Accelerator Department Chairman Date

D. Lederle

18.7.2 ERL Cryogenic System Vacuum Skid Operation

1. Purpose

This procedure covers the basic operation of the Vacuum Pump Skid for the ERL Cryogenic System.

2. Responsibilities

2.1 A shift supervisor, or an operator designated by the shift supervisor, is responsible for implementing the procedure.

3. Prerequisites

3.1 Operator shall become familiar with the system P&ID drawings 010604015 and 010604017, the control system screen(s) on the operator station, and the physical location of components.

3.2 Prestart checks:
- If an extended period of time has elapsed since last operation, check for freedom of rotation of both Kinney pumps and the Booster pump. Verify main breaker is locked first.
- Check oil levels of Kinney pumps. Should be approximately even with the centerline of the pump shafts.
- Check oil level of Booster. Should be approximately at mid position of sight glass.
- Check valve line-up for oil system. The following valves should be opened, or in a throttled position: V-5A&B, V-6A&B, V-7A&B, V-13, V-14, V9A&B, V10A&B.
- Verify cooling water supply to the skid and return from the skid are lined up.
- Verify instrument air is available to the skid.

3.3 ESH

3.3.1 All personnel working on any electrical system or equipment in the C-AD shall be familiar with BNL SBMS Electrical Safety, BNL SBMS Lockout/Tagout (LO/TO), C-A-OPM 1.5, "Electrical Safety Implementation Plan", C-A-OPM 1.5.3 "Procedure to Open or Close Breakers and Switches and Connecting/Disconnecting Plugs", C-A-OPM 2.36, "Lockout/Tagout for Control of Hazardous Energy". C-AD will provide on-site/work specific training to individuals in the electrical safety aspects of their job functions and assignments.

3.3.2 While work is underway and an abnormal condition arises, re-review the job against criteria in applicable SBMS Subject Areas, and/or work planning requirements. If unsure of further actions, discuss situation with supervisor.

4. Precautions

Hearing protection and safety glasses are required in EEBA bldg. when the vacuum pump skid is operating.

5. Procedure

5.1 Manual Start Procedure

5.1.1 Obtain handheld infrared temp detector and frequently check bearing temperatures of the Kinney pumps and booster pump until they have stabilized.

5.1.2 Verify 10" suction valve H10944A is shut. Verify discharge flow path to atmosphere or compressor suction.

5.1.3 Verify "Hand-Off-Auto" switches for the Kinney pumps are in off, and the "Off-Auto" switch for the booster pump is off.

5.1.4 Start the "A" Kinney pump by placing the switch to the hand position. Verify the following occurs:

5.1.4.1 The "A" pump starts.

5.1.4.2 Solenoid Valve V-11A opens, supplying cooling water to HX1A. Verify flow by feeling inlet and outlet pipes.

5.1.4.3 The "A" oil pump starts after a 3 second time delay. Immediately verify pump operation and flow.

5.1.4.4 Process inlet valve V-1A should open after 60 sec. If there is excess vibration during this time period, the valve can be opened sooner using the red switch on the valve. With the valve open, the vibration lessens.

5.1.5 Start the "B" Kinney pump by placing the switch to the hand position. Verify the following occurs:

5.1.5.1 The "B" pump starts.

5.1.5.2 Solenoid Valve V-11B opens, supplying cooling water to HX1B. Verify flow by feeling inlet and outlet pipes.

5.1.5.3 The "B" oil pump starts after a 3 second time delay. Immediately verify pump operation and flow.

5.1.5.4 Process inlet valve V-1B should open after 60 sec. If there is excess vibration during this time period, the valve can be opened sooner using the red switch on the valve. With the valve open, the vibration lessens.

5.1.6 When system has stabilized, crack open suction valve H10944A. The booster pump will begin to windmill. Closely monitor bearing temperatures while in this mode. When the system pressure is below 35 torr, the booster pump can be started. To start, place the "Off-Auto" switch to auto, and verify the following:

5.1.6.1 The booster pump starts.

5.1.6.2 Solenoid valve V-15 opens supplying oil injection to the blower. Immediately verify oil flow by checking the sight glass just upstream of the solenoid.

5.1.6.3 Solenoid valve V-16 opens supplying cooling water to HX2. Verify water flow by feeling inlet and outlet pipes.

5.1.6.4 Solenoid valve V-17 opens supplying cooling water to the gear oil cooler. Verify water flow by feeling inlet and outlet pipes.

5.1.6.5 Solenoid valve V-17 opens supplying cooling water to the pulley end bearing. Verify water flow by feeling inlet and outlet pipes.

5.1.6 Bypass Valve V-3 operation: Once system pressure is below 35 torr with the booster pump running, the bypass valve can be used to control booster pump suction pressure. First verify valves V-2 and V-4 are open, then place V-3 in auto from the PLC or indusoft work station.

5.2 Auto Start Procedure

5.2.1 The system can be started in auto from the PLC by pressing the F1 key with the Kinney pumps and blower switches in the "Auto" position. Verify the sequence of events described under the manual start procedure occur, and perform all the same system checks. Once the booster pump is running, it may be difficult to crack open the 10" suction valve H10944A without overloading the booster motor.

5.3 Initial Dry Out and Purging Process (Initial commissioning)

The dry-out of the vacuum pump skid system can be performed by supplying nitrogen from a buggy to the 10" suction line via vent valve H10970M while the skid is operating and discharging to atmosphere. Control suction pressure by throttling H10970M.

5.4 Shutdown

In auto mode, shutdown can be initiated by pressing the F2 key. Pressing F2 initiates a shutdown sequence which takes approximately 90 seconds to complete. In addition, the auto shutdown sequence its initiated if any of the following alarm conditions occur: Low sealant tank level (A or B), high sealant tank temperature (A orB), high booster discharge temperature, low booster inlet temperature.

5.5 Securing the skid and LOTO

After a shutdown, if the skid will be down for a long period, or if maintenance needs to be done, the skid should be secured by applying LOTO to the main 440 volt breaker.

6. Documentation

The shift supervisor shall document the completion of the procedure in the cryogenics control room log book.

7. References

7.1 Drawing **010604015**

7.2 Drawing: **010604017**

7.3 C-A-OPM 1.5, "Electrical Safety Implementation Plan".

7.4 C-A-OPM 1.5.3 "Procedure to Open or Close Breakers and Switches and Connecting/Disconnecting Plugs".

7.5 C-A-OPM 2.36, "Lockout/Tagout for Control of Hazardous Energy".

7.6 SBMS Electrical Safety.

7.7 SBMS Lockout/Tagout (LOTO).

8. Attachments

None

If you are using a printed copy of this procedure, and not the on-screen version, then you MUST make sure the dates at the bottom of the printed copy and the on-screen version match.
The on-screen version of the Collider-Accelerator Department Procedure is the Official Version.
Hard copies of all signed, official, C-A Operating Procedures are available by contacting the ESSHQ Procedures Coordinator, Bldg. 911A

18.7.3 ERL – Small Test Dewars (14" and 28") Operation

Hand Processed Changes

HPC No.	Date	Page Nos.	Initials

Approved: _____***Signature with Date on File***_____
Collider-Accelerator Department Chairman Date

P.Orfin

18.7.3 ERL – Small Test Dewars (14” and 28”) Operation

1. Purpose

This procedure covers the basic operation of the ERL test Dewars in building 912.

The cryogenic system for the operation of these test Dewars consist of supplying liquid helium to the test Dewars, a vacuum system, a helium recovery line, and proper venting for emergencies. The Dewars will submerge the test article in liquid helium at 4 K or 2 K through use of a vacuum pump. Liquid helium is supplied from portable Dewars to the test Dewars.

There are 2 test Dewars available, a 14” (105 liter capacity) and a 28” (600 liter capacity) diameter Dewar, with 0.8 PSIG and 5 PSIG respective relieving pressures. Both Dewars share the same piping connections and as a result both Dewars cannot be used at the same time. Since the test articles can produce radiation, the test Dewars will be operated in the Little Block House in building 912.

2. Responsibilities

2.1 A shift supervisor, or an operator designated by the shift supervisor, is responsible for implementing the procedure.

3 Prerequisites

3.1 Vacuum pump skid available (C-A-OPM 18.7.2).

3.2 Operator shall become familiar with the system P&ID drawing 010604071, test Dewar P&IDs (CA6000001 for 14” Dewar and CA6000002 for 28” Dewar), the control system screen(s) on the operator station, and the physical location of components.

3.3 Verify the overhead crane is locked out.

3.4 Make sure test Dewars are fixed in place.

3.5 Verify that Insulating vacuum is okay.

- 3.5.1 The 14 inch Dewar does not have a permanent gage installed.
- 3.5.2 If unsure, connect a vacuum gage and vacuum pump to the pumpout valve and rough down the dead volume before opening the isolation valve.
- 3.5.3 If the vacuum level is above 100 micron, the volume can be evacuated with a roughing pump. High vacuum will be established when the Dewar cools down and starts cryo-pumping.

3.6 ESH

3.6.1 The following PPE is required to handle the connection of portable liquid helium Dewar to the cryomodule:

3.6.1.1 Face Shield
3.6.1.2 Cryo-Gloves
3.6.1.3 Long sleeve shirt

3.6.2 While work is underway and an abnormal condition arises, re-review the job against criteria in applicable SBMS Subject Areas, and/or work planning requirements. If unsure of further actions, discuss situation with supervisor.

3.6.3 Ensure that alley between the Little Block House (LBH) and the Vertical Test Dewar Block House is roped off for restricted access by cryogenic personnel only.

3.6.4 Ensure that all cryogenic personnel wear hearing protection when near the corner of the Little Block House (LBH) or the liquid helium supply Dewar. The pressure relief vent pipe is located there and there is a chance of high noise levels if emergency venting occurs.

3.6.5 Ensure that the ERL plant in 912 has the proper "sudden noise hazard" signs posted to alert others that emergency venting can result in a loud noise.

4. Precautions

4.1 The test Dewars are not to be moved until all liquid is removed.

4.2 Ensure all safety systems are functional before conducting operation.

4.3 Ensure that the vent fan stays on when someone is in the Little Block House (LBH). The fan is to use to vent the LBH in the event of a leak in the Dewar fill line as indicated in memo "B912 Small VTA House ODH Fan Calculation 6-20- 08 SRF Gun Experiment - Revised 12-3-08" from R. Karol on June 20, 2008.

5. Procedures

5.1 Preparation and System Component Checkout

5.1.1 Instrument Air

Verify that instrument air is available to the air supply line to the air actuated control valves.

5.1.2 Valve check-out

Verify operability of all automatic valves from the ERL control screens:

5.1.3 Instruments

Verify all ERL pressure, temperature, and differential pressure instruments have indication on the ERL control screens.

5.1.4 *Test Dewar piping connections*

Ensure that all connections are made for each test Dewar. Each Dewar has 4 piping connections; vacuum, helium vessel pressure relief, vacuum vessel pressure relief, and fill line. Each Dewar has a unique vacuum spool piece as well as a unique pressure relief piping specific to the requirements for that vessel (010604138 for the 14" and 010604171 for the 28" Dewar). The vacuum vessel relief line is a common connection among both vessels. Use the purchased JANIS insulated transfer line (dwg # D04- 09-09) or the larger diameter CA6000005 line for filling the Dewars. The shorter stab is to be connected to the test Dewars.

5.1.5 Liquid Helium Inventory and Delivery

Ensure that the adequate amount of low pressure Dewars are available for the test that will be conducted. The necessary amount will vary depending on the test duration and heat leak of the system.

5.1.6 Evacuate and Purge

Dry out of moisture is not required, unless there is a reason that it got wet. Evacuate and purge is required to get rid of the air before cold helium is introduced. Connect portable roughing pump to flange at the end of line 1018 (after H3317M) and pump test Dewar down to less than 50 Microns. Backfill the Dewar with warm helium gas to slightly over 1 atm. Valve H1388M is provided to allow for warm helium flow from the ERL system. Wait 15 minutes before pumping again to allow moisture to desorb from metal surface. Perform this 2 or 3 times.

5.1.7 Insulating Vacuum

This is a prerequisite. See start of OPM.

5.1.8 Test check valves on 14" test Dewar

Verify that the two check valves on the 14" Dewar relief line are functioning. Pressurized Dewar vessel to 0.5 PSI with helium or nitrogen (do not over pressurize since the burst disc relieves at 0.8 PSI) and monitor outlet flow at the end of the 6" line 1019 visually. When flow is detected, this means both valves are functioning. Next, open valve H1385M (CA6000001) and monitor flow coming out of the valve. T h i s will indicate that the lower check valve is functioning. Allow vessel to depressurize after the test.

5.1.9 Verify Valve position for cool down
For 14” Dewar operation, ensure valve H1385M is closed.

For 28” Dewar operation, ensure that valve H1384M is open. Ensure valves H3316A and H3487M are closed.

Only for the 28 inch Dewar: If helium recovery system is not operational, ensure valve H3488M is closed and that valve H3317M is open. If it is operational, ensure valve H3488M is open and that valve H3317M is closed as per ERL plant OPM.

	14” Dewar	28” Dewar	Check-off
H1385M	Closed		
H1384M		Open	
H3316A	Closed	Closed	
H3487M	Closed	Closed	
H3317M	Open	Open	
H3488M	Closed	Closed	

28 inch Dewar helium recovery to plant low pressure side

	28” Dewar	Check-off
H3317M	Closed	
H3488M	Open	

5.2 Cool Down to 4.2K operation

5.2.1 Don required PPE: cryo-gloves, face shield, POM, long sleeve shirt, hearing protection

5.2.2 Portable Dewar stab

5.2.2.1 Close the manual valve on the fill transfer line

5.2.2.2 Depressurize the Portable supply Dewar to 0.2 psig.

5.2.2.3 Insert transfer line into the liquid helium supply Dewar.

5.2.2.4 Keep the vent valve on the portable supply Dewar open during stabbing of the transfer line.

5.2.3 Open the liquid helium supply valve on the fill transfer line to start cooldown and fill the test Dewar. Start with ½ turn

5.2.4 Monitor pressure (PT8467H or PI8467H) to keep the test Dewar

pressure below 1.025 atm (0.367 psig or 15.06 psia) and liquid level (LI200H or LI90H) during fill. Use test article temperature sensors to ensure that cooldown rate (K/min) does not exceed the level indicated by the experiment's requirements.

Note: The 14 inch Dewar relief is set at 0.8psig Start cooldown slowly and proceed with attention to pressure

5.2.5 Once the desire liquid level is achieved, close or throttle back the helium transfer line valve to stop or reduce flow into test Dewar.

5.2.5.1 Adjust valve to maintain liquid level in order to match boil off from experiment.

5.2.5.2 Cool down complete and 4.2K operation is achieved.

5.3 2K operation

5.3.1 Once 4.2K operation is reached, the vacuum skid can be started.

5.3.1.1 Refer to CA-OPM 18.7.2 section 5.1 for manual mode (ERL Cryogenic System Vacuum Skid Operation) for it operation

5.3.2 10 inch vacuum header pumpdown
This header will be pumpdown first using just the liquid ring pump with the booster off. This will bring the vacuum down to 2 psia. Then pumpdown of the test Dewar can commence.

5.3.3 Top off the liquid level in the test Dewar to the desired level. Close liquid helium transfer line valve to stop filling test Dewar

5.3.4 Quickly perform the following: Close H3317M

5.3.5 Monitor test Dewar pressure and vent if necessary through H3317M.

5.3.6 Crack open H3316A (or H3487M) and continue pump down with Kinney pumps only until vacuum pump suction pressure drops below 35 Torr, then place booster in auto as per C-A-OPM 18.7.2.

5.3.7 Use H3316A (or H3487M) to control 23 Torr at the vacuum pump suction, PT-1 controller to prevent overload on the booster or lower pressure if a lower mass flow rate is desired.

5.3.8 When test article is at 2K, slowly open H3316A (or H3487M) fully.

5.3.9 To control 23 Torr at test Dewar requires a slightly lower set point at the vacuum pump suction, PT-1 set point controller.

5.4 Warm up

5.4.1 Shut down vacuum pump skid and establish a vent path to atmosphere or helium recovery compressor suction
5.4.1.1 For atmospheric venting, open H3317M
5.4.1.2 For helium recovery, open valve H3488M

5.4.2 Valve H1388M is provided to allow for warm helium flow from the ERL system to aid in the warm up of the Dewars. Flow needs to be controlled and monitored to ensure that thermal temperature gradients are not exceeded for each experiment.

5.4.3 Once all liquid from the test Dewar is emptied and temperatures have reached room temperature, it is safe to disconnect the test Dewar.

5.4.4 Ensure valve H3309A is closed and that either valve H3316A or H3487M is left open.

6. Documentation

6.1 Record

The check off lines in the procedure is for place keeping only. The procedure is not to be initialed or signed, it is not a record.

6.2 Log

The shift supervisor shall document the completion of the procedure in the cryogenics control room log book.

7. References

7.1 C-A-OPM 18.7.2, "ERL OPM Process Vacuum Pump".
7.2 Drawing: CA6000001for 14" Dewar and CA6000002 for 28" Dewar
7.3 Drawings: 010604071 ERL plant P&ID; 010604015 Vacuum Skid

8. Attachments

8.1 Valve Description/Location Table

Attachment 8.1

Valve Description/Location Table

Tag	Description	Location
H1385M	14” Dewar relief piping, off the top of Dewar	14” Dewar
H1384M	28” Dewar relief isolation, off the top of Dewar	28” Dewar
H1388M	Warm Helium Supply Valve, for purge or warm-up	Inside LBH Instrumentation
H3316A	6” vacuum valve	Outside LBH by shielding blocks
H3487M	1” manual vacuum valve bypass	Outside LBH by shielding blocks
H3488M	2” helium recovery valve	Outside LBH by shielding blocks
H3317M	2” atmospheric vent valve	Outside LBH by alley
H3309A	10” vacuum Valve	Alley by ERL Block House

If you are using a printed copy of this procedure, and not the on-screen version, then you MUST make sure the dates at the bottom of the printed copy and the on-screen version match.
The on-screen version of the Collider-Accelerator Department Procedure is the Official Version.
Hard copies of all signed, official, C-A Operating Procedures are available by contacting the ESSHQ Procedures Coordinator, Bldg. 911A

C-A OPERATIONS PROCEDURES MANUAL

18.7.4 ERL & VTF Cryogenic System Operation

Hand Processed Changes

HPC No.	Date	Page Nos.	Initials

Approved: ***Signature on File***
Collider-Accelerator Department Chairman Date

R. Than

Contents

1 Purpose 4

2 Responsibilities 5

3 Prerequisites 5

3.1 Drawings: P&ID

3.2 OPM'S

3.3 Operator objectives

3.4 ESH

3.4.1 PPE

4 Precautions and Facility Requirements 6

4.1 ODH

4.2 10" Relief Header

4.3 Cordon off area around cryoplant

4.4 Startle/Noise Hazard

4.5 Cooling Water tower

4.6 Instrument Air

4.7 Helium Inventory

4.8 11,000 Gal LN2 Dewar

4.8.1 Valve line up user equipment

4.8.2 Cooldown of main LN2 supply line:

5 Preparation 8

5.1 Instruments

6 Procedures 8

6.1 Initial Line up and System Clean out

6.1.1 Main Helium Compressor and Oil Removal System

6.1.2 Helium Refrigerator 1660S Cold box Preparation

6.1.3 Liquid Helium 1000 Gallon Storage Dewar Preparation

6.1.4 Subcooler Preparation

6.1.5 Distribution Valvebox / Cryoduct Preparation

6.1.6 Wet Expander Preparation

6.1.7 The ERL cryomodules 5-CELL and SRFGUN Cryostat System Preparation

6.1.8 ERL704MHz SRF Gun Cryostat and valvebox System Preparation

6.1.9 Cold Cathode Loop Preparation

6.1.10 Large 40 inch Vertical Test Dewar Preparation

6.2 Operation
6.2.1 Compressor Operation
6.2.2 Oil Coalescers Drainage checkout
6.2.3 1660S Coldbox Operation
6.2.4 300K - 100 K Cooldown of the Subcooler
6.2.5 100K to 4K Cooldown of 1660, LHe storage dewar, and subcooler.
6.2.6 Startup and cooldown of 1660 Coldbox with liquid in LHe dewar
6.2.7 Cooldown of cryoduct transfer lines and distribution valvebox system
6.2.8 Cool down of SRF Gun Cryostat / Gun valvebox and 5-cell Cavity Cryostat / valvebox
6.2.9 Cold cathode cool down
6.2.10 40 inch Vertical Test Dewar Operation: Cooldown and Operation
6.3 Shutdown / Warmup of Equipment
6.3.1 Subcooler warm-up and shutdown
6.3.2 VTD Warmup and shutdown
6.3.3 Cold cathode cooling loop warm-up and shutdown
6.3.4 SRF Gun Cryostat/valvebox warm-up and shutdown
6.3.5 5-CELL Cryostat/valvebox warm-up and shutdown
6.3.6 Kinney vacuum skid shutdown
6.3.7 1660 Plant shutdown
6.3.8 1000 Gallon Liquid helium dewar warmup and shutdown
6.3.9 Sullair Compressor shutdown
6.3.10 LN2 System shutdown
6.4 Emergency Procedures
6.4.1 ODH Alarms
6.4.2 Equipment Emergencies
6.4.3 Overpressure of equipment
7 Documentation 64
7.1 Record
7.2 Log
7.3 References
7.3.1 C-A-OPM 18.7.2, “ERL OPM Process Vacuum Pump”.
8 Attachments 64
A Valve Lineup Tests 65
B Valve & Instrument List, Description/Location Table 101
C Equipment Description, Valves and Instrumentation & Control Logic 145

1 Purpose

This procedure covers the basic operation of the Cryogenic System for the Energy Recovery Linac ERL / Vertical Test Facility VTF.

The cryogenic systems for ERL and the VTF consist of the following equipment in the following locations:

Equipment	Location
46,000 Gal gas storage tank	Outside 912 (large beige horizontal tank)
1660S refrigerator coldbox	EBA 912 High bay
1000 Gallon Cryofab dewar	EBA 912 High bay
Subcooler, Ability Engineering	EBA 912 High bay
Valvebox, PHPK Technology	EBA 912 High bay
Wet expander, KochProcessSystem	EBA 912 High bay
Ambient vaporizer, Cryoquip	912 NEBA side bay
40” Vertical test Dewar, PHPK	EBA Inside the vertical test facility blockhouse
Sullair compressor	912 Compressor/vacuum pump building annex
Kinney vacuum pumps	912 Compressor/vacuum pump building annex
Fine Oil Removal System, Balston	912 EEBA side bay

Equipment	Location
Valvebox for 5 cell, EDEN Cryogenics	ERL BLOCK HOUSE
5-cell cryomodule,	ERL BLOCK HOUSE
SRF Gun cryomodule	ERL BLOCK HOUSE
Valvebox for SRF Gun, EDEN Cryogenics	ERL BLOCK HOUSE
Cold cathode supply lines, EDEN Cryogenics	ERL BLOCK HOUSE

Liquid Nitrogen is distributed into the building via a main VJ main line that runs from outside the building into the ERL blockhouse and supplied the ERL 5-cell valvebox/cryomodule, the SRF gun valvebox-cryomodule and cold cathode shield, the LN2 main continues through the VJ bundle back out on the other side of the ERL blockhouse and supplies the plant and vertical test facility with LN2 for the shield.

11,000 Gal LN2 Dewar	Outside 912 (Vertical dewar)

2 Responsibilities

2.1 A shift supervisor, or an operator designated by the shift supervisor, is responsible for implementing the procedure.

3 Prerequisites

3.1 Drawings: P&ID

	Dwg. no	
1	010604071	System PFD
2	010604041	Scrf Gun System
3	010604046	Ecx 5 cell cavity
4	010604039	Warm gas storage Tank
5	010604035	Mist Removal & Adsorber
6	010604034	Cryofab 1000 Gal LHe DEwar
7	010604032	Helium Compressor 1
8	010604031	LN2 Storage 11,000 Gal
9	010604089	2x2 Wet expander
10	010604048	1660S cryoplant
11	010604015	Kinney Vacuum Skid
12	010604087	Subcooler
13	010604088	Cold Cathode cooling loop
14	CA6000002	28 inch vertical test dewar
15	CA6010001	40 inch vertical test dewar
16	CA6000001	14 inch vertical test dewar
		Instrument Air: Pressure

3.2 OPM'S

OPM's for the following:
Vacuum pump skid (C-A-OPM 18.7.2).

3.3 Operator objectives

Operator shall become familiar with the system P&ID drawings listed in this OPM, and referenced OPM's, the control system screen(s) on the operator station, and the physical location of components.

3.4 ESH

3.4.1 PPE

The following PPE is required to handle the connection of portable liquid helium dewar to the cryomodule:

- Face Shield
- CryoGloves
- Long sleeve shirt

The following PPE is required for working around the cryoplant components:

- Safety glasses
- Long sleeve shirt
- Double Hearing protection, compressor room and around relief valves

While work is underway and an abnormal condition arises, re-review the job against criteria in applicable SBMS Subject Areas, and/or work planning requirements. If unsure of further actions, discuss situation with supervisor.

4 <u>Precautions and Facility Requirements</u>

4.1 ODH

Verify ODH systems for the ERL blockhouse, Vertical test facility and compressor/vacuum pump room building are active/online.

Posting of ODH 0 signs should be done if that has not been completed yet before startup or valve line up of any subsystems. Check with shift supervisor, cryo group mechanical technician supervisor, or cryo group operations group leader, or cryo group head.

4.2 10” Relief Header

Rope off the area outside the ERL cave where the vent line discharges, just at the manifold where the intercept return flow controllers are located on the wall.

4.3 Cordon off area around cryoplant

Ensure area around the cryoplant is chained off with signs indicating authorized personnel only.

4.4 Startle/Noise Hazard

Check area for posting of startle hazard / loud noise signs at the compressor room relief, around the cryoplant area, and discharge headers.

The compressor and Kinney vacuum room is very loud when running. The room is rated for ***double hearing*** protection, under 8 hours.

4.5 Cooling Water tower

Ensure cooling tower is operational and water flow is present to the Sullair compressor and Kinney vacuum skid.

4.6 Instrument Air

Verify that instrument air is available to the air supply line to the air actuated control valves. There are air distribution manifolds blocks inside the ERL blockhouse and near the 1660 plant area that supplies the valves.

4.7 Helium Inventory

The 46,000 Gallon tank will hold 220 liquid liters per atmospheric pressure.
To have 3000 liquid liters equivalent the pressure needs to be 13.6 atmg or 200 psig

50,000 SCF tube trailer: each trailer will provide around 1800 equivalent liquid liters of helium inventory.

4.8 11,000 Gal LN2 Dewar

Verify there is liquid nitrogen in the dewar, at least 30% level at the manual level gage outside at the dewar. If the system has ready been run and the main LN2 line is open and is supplying LN2 to the system, then proceed to next section.

4.8.1 Valve line up user equipment

Before opening the LN2 supply from the dewar to the main LN2 supply line into the building: Verify that:

a. ODH system is functioning and active
b. The LN2 fill valve N6100A on the 1660S plant coldbox is closed
c. The shield supply control valve N3315A on the 40 inch vertical test dewar is closed or LOTO's closed
d. The shield supply control valve N3302A to the ERL 5-cell cryostat (010604071)
e. The shield supply control valve N3303A to the ERL SRF Gun cryostat (010604071)
f. The LN2 supply control valve N3307A to the Cold Cathode Cooling loop (010604088)

Tag	P&ID Number	Description	Location	POSITION	Check
N6100A	010604048	LN2 fill valve 1660 LN2 precooling	1660 Top plate Rear	CLOSE	
N3301M	010604071	The shield supply control valve N3303A to the ERL SRF Gun cryostat	SRF GUN Valve box EDEN	CLOSE	
N3302A	010604071	The shield supply control valve N3302A to the ERL 5-cell cryostat	On LN2 line next to 5-cell Valve box EDEN	CLOSE	
N3303A	010604071	The shield supply control valve N3303A to the ERL SRF Gun cryostat	SRF GUN Valve box EDEN	CLOSE	
N3315A	010604071	The shield supply control valve N3315A on the 40 inch vertical test dewar is closed	On Cryoduct trunk above valve box	CLOSE LOTO	

****

PRECAUTION:
ODH SENSING and INTERLOCK SYSTEM
MUST BE OPERATIONAL
Verify that the ODH system is up and running and has been certified.
The automatic isolation valve will automatically be opened if the ODH system is up and running and the ODH status is safe

****

4.8.2 Cooldown of main LN2 supply line:

Proceed with opening the main isolation valve if the system is ready.

UnLOTO the main **manual** isolation valve **N3334M**, located at the dewar when the rest of the cryogenic system is ready.

The automatic LN2 isolation valve **N3354A** will be already open once the ODH system is active

Once the Main manual isolation valve **N3334M is opened,** the line will commence cooldown on its own, due to the presence of keep-fulls on the main supply line. The keep-fulls will vent vapor until there is liquid in the keep-fulls.
Verify the keepfulls are venting. This can be done by going to the discharge of the nitrogen vent line system located just outside the wall near the large helium storage tank.

5 Preparation

5.1 Instruments

Verify all pressure, temperature, and differential pressure instruments have indication on the HMI control screens.

6 Procedures

The procedures are organized a section for preparing the skid and system, with valve-line-ups for each piece of equipment starting from a cleaned system or a shutdown with a pump and purge and skid check out.

The section following that gives instruction for start-up, operation, and cool down of equipment.

The subsequent section gives instruction for warm and or shutdown of the equipment.

The last section gives procedures in the event of catastrophic failures and emergencies.

6.1 Initial Line up and System Clean out

6.1.1 Main Helium Compressor and Oil Removal System

Compressor skid (dwg: 010604032 Helium Compressor 1 P&ID)
Oil Removal System (dwg: 010604035 P&ID)

Table 6.1.1 Helium Compressor skid valve line up

Tag	Description	
E3300M	Bulk Oil separator drain	CLOSE
E3306M	Oil filter selector valve	Switch #1 strainer
E3307M	Oil filter #1 pressure sensor isolation valve	OPEN
E3308M	Oil strainer #1drain valve	CLOSE
E3311M	Oil filter #2 pressure sensor isolation valve	CLOSE
E3312M	Oil strainer #2 drain valve	CLOSE
E3315M	isolation valve, oil strainer inlet pressure indicator gage	OPEN
E3314A	Selector valve between oil manifold pressure or strainer inlet pressure monitoring	Automatic
W0100M	Water bleed down/drain valve, after-cooler exit water side	CLOSE
W0101M	Water bleed down/drain valve, water exit oil cooler side	CLOSE
W4000M	Water bypass valve around TCV W3301A	Open ¼ turn
W3301A	Temperature control valve, cooling water	Automatic
W0102M	Water outlet valve from compressor skid	OPEN
W0104M	Water inlet valve to compressor skid	OPEN

Interlocks and alarms
The following hard wired shutdown interlocks are on the skid.
These interlocks should be tested if the system has not been operated for over a year.

Table 6.1.2 Shutdown Wired Interlocks

Tag	Description	
PSH-3306H A/B	High discharge pressure, switch	250 psi
TSH-3306H	High discharge temperature, switch	240 °F
PSL-3307H	Low Oil pressure, [DP] switch, manual reset	40 psid (below discharge)
PSL-3305H	Low suction pressure, switch, manual reset	-5 psig
TSH-3304E	High oil temperature, oil-pump inlet, switch	240°F

6.1.1.1 Instruments /Controllers

TSH-3305E	High oil temperature, bulk oil heater controller	165°F
TT3323H	Discharge temperature compressor	
PI 3317H	Pressure gage discharge pressure	
PI 3319H	Pressure gage suction pressure	

6.1.1.2 Compressor Pre-operation Preparation

Initial Oil Charge

Sufficient oil should be charge into the oil separator reservoir to establish a level in the upper sight glass.

An additional 2 gallons (8 liters) of oil should be pumped into the filter through the valve in the bottom of the filter canister to assure adequate lubrication during initial start-up.

Check that the bearings are pre-lubricated by loosening a nipple on the discharge journal bearing oil supply line at the compressor bearing and pump a small additional amount of oil until oil weeps at the loosened nipple. Make a final check by pumping further oil and noting the pressure increase on the oil pressure gauge.

Initial Oil Warm-up

After installing the initial oil charge, connect the oil heater and supply power to the compressor panel. This will allow the oil in the oil reservoir to warm to operating temperature and will help facilitate a smooth start-up.

With power to the motor off, power supplied to the panel and the oil temperature below the thermostat setting of 165°F verify that the oil heater is on by checking the current drawn. Alternatively check the heater element by noting the relative temperature of the separator at the element and the opposite side.

6.1.1.3 Capacity Control Electrical Valve Actuator

Cam limit settings: Follow the manufacturer's manual for adjusting the cam limits for the slide valve control.

The following paragraph covers only the initial **pre-operation** preparation of the compressor and not the remainder of the refrigeration system. Be sure that all necessary system valves are open and that the refrigeration system is ready for start-up. Use the following check list to guarantee that no items of importance regarding the compressor package have been overlooked.

1. Motor starter breaker disconnected from the electric supply line.
2. Low oil pressure protective switch reconnected.
4. All protective switches verified for correct operation.
5. Oil temperature in the separator sump is 105°F.
6. Oil level established in upper sight glass.
7. Two gallons (8 liters) of oil pumped into filter to pre-lubricate the compressor bearings.
8. Cooling water to oil cooler turned on.

Oil Pump

The pump is shaft driven by the compressor drive, so there is no oil injection before startup, unlike a motor powered pump.

6.1.1.4 Gas Management valves

Valve Check-out

If the gas management valves have not been operated for over a year, the valves should be checked out by stroking the control valves.

With nothing running yet:
Isolate the gas storage tank by closing the manual isolation ball valve **H3484M**, to prevent gas flow from tank during stroking of gas management valve.
Stroke the valves and have someone observe that they are functioning.
Put H3301A and H3300A back into automatic PID control, leave H3302A in manual, closed.

Gas Management valves

Tag	Description	Check
H3301A	by-pass valve	
H3300A	pumpback (mass-out)	
H3302A	Make-up (mass–in)	

Tuning Parameters

		H3301A	H3300A	H3302A
Proportional Band (1/Gain)	KP	35	18	18
Integral (1/Reset)	KI	11	6	6

Reopen isolation valve on gas storage tank after completion of control valves check-out.

6.1.1.5 Gas storage valve line up

Tag	P&ID dwg	Description	Position	Check
H3484M	010604039	isolation valve on gas storage tank	OPEN	

6.1.1.6 Charcoal bed and final filter valve line up

Tag	P&ID dwg	Description	Position	Check
H3306M	'010604035	isolation valve between 4th stage coalescers and carbon adsorber bed inlet	OPEN	
H3476M	'010604035	Purge Valve, Inlet side Oil removal charcoal bed	CLOSE	
H3477M	'010604035	Regen gas supply isolation valve	CLOSE	
H3478M	'010604035	Isolation valve, Bed Particulate Guard filter outlet side	OPEN	
H3479M	'010604035	Gas Sample needle valve, Bed Particulate Guard filter outlet side	CLOSE	
H3480M	'010604035	Purge valve, Bed Particulate Guard filter outlet side	CLOSE	
H3481M	'010604035	Bleed Valve, Inlet side Oil removal charcoal bed	CLOSE	

6.1.1.7 Valve line-up Table, Normal Operation: Oil Coalescers Valves

1st stage CLS-001A

Tag	Description	Position	check
H3396M	Bypass valve, Oil Float drainer, stage 1-A, DX	CLOSED	
H3397M	Isolation valve oil level sight glass indicator LI 3301, bottom	OPEN	
H3359M	Isolation valve oil level sight glass indicator LI 3301, top	OPEN	
H3358M	Isolation valve dp indicator DPI 3301	OPEN	
H3357M	Isolation valve dp indicator DPI 3301	OPEN	

1st stage CLS-001B

Tag	Description	Position	check
H3446M	Bypass valve, Oil Float drainer, stage 1-B, DX	CLOSED	
H3445M	Isolation valve oil level sight glass indicator LI 3302, bottom	OPEN	
H3398M	Isolation valve oil level sight glass indicator LI 3302, top	OPEN	
H3444M	Isolation valve dp indicator DPI 3302	OPEN	
H3399M	Isolation valve dp indicator DPI 3302	OPEN	

2nd stage CLS-002A

Tag	Description	Position	check
H3451M	Bypass valve, Oil Float drainer, stage 2-B, BX	CLOSED	
H3450M	Isolation valve oil level sight glass indicator LI 3303, bottom	OPEN	
H3447M	Isolation valve oil level sight glass indicator LI 3303, top	OPEN	
H3448M	Isolation valve dp indicator DPI 3303	OPEN	
H3449M	Isolation valve dp indicator DPI 3303	OPEN	

2nd stage CLS-002B

Tag	Description	Position	check
H3394M	Bypass valve, Oil Float drainer, stage 2-A, BX	CLOSED	
H3395M	Isolation valve oil level sight glass indicator LI 3300, bottom	OPEN	
H3319M	Isolation valve oil level sight glass indicator LI 3300, top	OPEN	
H3315M	Isolation valve dp indicator DPI 3300	OPEN	
H3314M	Isolation valve dp indicator DPI 3300	OPEN	

3rd stage CLS-003A

Tag	Description	Position	check
H3457M	Coalescing filter drain valve to compressor	CLOSED	
H3452M	Isolation valve oil level sight glass indicator LI 3304, bottom	OPEN	
H3453M	Isolation valve oil level sight glass indicator LI 3304, top	OPEN	

3rd stage CLS-003B

Tag	Description	Position	check
H3469M	Coalescing filter drain valve to compressor	CLOSED	
H3465M	Isolation valve oil level sight glass indicator LI 3306, bottom	OPEN	
H3466M	Isolation valve oil level sight glass indicator LI 3306, top	OPEN	

4th stage CLS-004A

Tag	Description	Position	check
H3463M	Coalescing filter drain valve to compressor	CLOSED	
H3460M	Isolation valve oil level sight glass indicator LI 3305, bottom	OPEN	
H3461M	Isolation valve oil level sight glass indicator LI 3305, top	OPEN	

4th stage CLS-004B

Tag	Description	Position	check
H3475M	Coalescing filter drain valve to compressor	CLOSED	
H3472M	Isolation valve oil level sight glass indicator LI 3307, bottom	OPEN	
H3471M	Isolation valve oil level sight glass indicator LI 3307, top	OPEN	

6.1.1.8 Compressor System and warm piping clean out

For independent pump and backfill of the compressor system volume the following can be carried out.

6.1.1.9 Valve lineup

Tag	Description	Position	Check
H3305M	Compressor suction manual main isolation	CLOSED	
H3478M	Charcoal bed outlet filter manual isolation	CLOSED	
H3306M	Charcoal bed inlet	OPEN	
H3303M	Compressor manual bypass	OPEN	

Valve **H3310M:**

Connect a vacuum pump and clean helium gas source to this valve to be used for the pump and backfill.

Evacuate the volume to 5 Torr and back fill with 99.99 Helium to 1 atmosphere.

Repeat this process 3 times.

6.1.1.10 Running the compressor skid by itself

6.1.1.10.1 Valve line up main flow path compressor startup

Tag	P&ID dwg	Description	Location	Position	Check
H3478M	010604071	Charcoal bed outlet filter manual isolation	After particulate filter housing	OPEN	
H3306M	010604071	Charcoal bed inlet	Top of charcoal bed	OPEN	
H3303M	010604071	Compressor manual bypass		CLOSE	

H3305M	010604071	Compressor suction isolation	Top of return line near Sullair compressor	MANUAL	
H10947M	010604071	Isolation valve between helium shield and lead flows manifold and compressor low side return line	On manifold end for MKS mass flow controllers		

To run the skid by itself, without operational of the rest of the equipment that interfaces to:
Kinney skid
40 inch vertical test dewar
5K circuit return manifold

6.1.1.10.2 <u>Valve line up other interface to compressor system</u>

Tag	P&ID dwg	Description	Location	Position	Check
H3404M	010604015	Isolation valve to Sullair suction line	Kinney pumping system	CLOSE	
H3522M	CA6010001	¼ inch helium purge line	Vertical test dewar block house	CLOSE	
H3554M	010604071	¼ inch helium purge valve tee off tap on 2” HP	On above 2” piping near subcooler	CLOSE	
H9893C	010604048	Check valve	Above 1660S coldbox		
H10947M	010604071	5K circuit return Manifold isolation valve	System PFD diagram	CLOSE	
H3553M	010604071	Isolation valve HP helium to VTF ½” line	Near 1660 coldbox on 2 inch HP supply line	CLOSE	

6.1.2 Helium Refrigerator 1660S Cold box Preparation

6.1.2.1 Overspeed Safety Device trip switch check

Using the tool provided for the trip switch, to trip the switch, pull towards you, away from the flywheel.

Coldbox inlet valve **H9904A** should close and dump valve **H9845A** should open and dump inventory on the high pressure side of the coldbox to atmosphere.

The engine trip light(s) should light up.

To reset the switch: push away from you, or towards the flywheel.

6.1.2.2 Preliminary Checkout

1. Verify the conditions as listed below and make necessary corrections.
   a. The system has been decontaminated in accordance with Section 5.4.
   c. The System Control Mode switch is in "Local". All Auto/Manual selection switches on the control panel are in the "Auto" position.
   d. The vacuum jacket pressure is less than 100 microns as indicated on thermocouple gauge **VC100/VT101** (VIC-45).
   e. The collet clearance on the engine-valves is set in accordance with Section 5.1.13 of vendor manual.
   f. Refer to Table 4-1 for position of inlet cams.
   g. The toothed timing belts have been tightened to deflect about 1/8 inch with a moderate force of about 10 pounds at mid-span.
   h. Any external manual compressor bypass valves are closed.

2. When using liquid nitrogen for precooling, ensure that the LN2 supply is at 30 psig and ready for use.

3. Determine correct valve positions as follows:

Tag	P&ID Number	Description	Location	POSITION	Check
H9916A	010604048	Actuated isolation valve (V354) between Return bayonet line BC-3 and Exchanger HX2504B (E34B) cold end of plant	Top plate rear	CLOSED	
H9915A	010604048	Actuated isolation valve (V355) between Return bayonet line BC-4 and Exchanger HX2504A (E34A)	Top plate rear,	CLOSED	
H9914A	010604048	Actuated isolation valve (V356) between Return bayonet line BC-2 and Exchanger HX2504 (E34)	Top plate rear,	CLOSED	
H9917A	010604048	Actuated Cross-over valve (V350) between Return bayonet line BC-2 and Cooldown return bypass line low side	Top plate front	CLOSED	
H9918A	010604048	Actuated Cross-over valve (V351) between Return bayonet line BC-4 and Cooldown return bypass line low side	Top plate front	CLOSED	
H9919A	010604048	Actuated Cross-over valve (V352) between Return bayonet line BC-3 and Cooldown return bypass line low side	Top plate front	CLOSED	
H9907A	010604048	Actuated cooldown return valve(V389) from cooldown return header to between HX2502 (E32) and HX-2503 (E33)	Top plate front	CLOSED	
H9905A	010604048	Actuated cooldown return valve(V387) from cooldown return header to between HX2500 (E30) and HX-2501 (E31)	Top plate front	CLOSED	
H9912A	010604048	Actuated isolation valve (V367) between JT supply and bayonet BC-1	Top plate rear	CLOSED	
H9909A	010604048	Actuated Cross -over valve (V343)from HP JT loop to BC-5 /H9911A	Top plate front, left	CLOSED	
H9911A	010604048	Actuated Isolation valve (V342) for BC-5 connection	Top plate rear, right	CLOSED	

H9906A	010604048	Actuated Cooldown supply crossover valve (V385) from HP after charcoal beds (60K)into cooldown line supply line		CLOSED	
H9908A	010604048	cooldown Crossover valve (V382) to BC-6 connection from expanders 9A/B	Top plate front, right	CLOSED	
N6000M	010604048	Manual isolation valve, LO side of DPT6090N		OPEN	
N6001M	010604048	Manual isolation valve, HI side of DPT6090N		OPEN	
N6002M	010604048	Manual equalization valve, on DPT6090N		CLOSED	
H9913A	010604048	Actuated isolation valve (V318) on discharge side of expanders 9A/B	Top plate front, right	OPEN	
H9821M	010604048	Manual purge valve (V312) on HP helium line UPSTREAM of boiler		CLOSED	
H9807M	010604048	Manual isolation valve(V339) for low side tap(to atmosphere) on compressor return line		CLOSED	
H9813M	010604048	Bleed Valve from high pressure line precooler supply to atmosphere (V397)		CLOSED	
H9863M	010604048	Manual purge valve (V377)on return line Bayonet BC-3		CLOSED	
H98xxM	010604048	Manual purge valve (V376)on return line Bayonet BC-4		CLOSED	
H9861M	010604048	Manual purge valve (V373)on return line Bayonet BC-2		CLOSED	
H9811M	010604048	Manual needle valve (V396) for supplying warm helium purge upstream of JT5 valve (JT 307)		CLOSED	

Valves isolating the charcoal adsorber not being used (either Bed E36A or bed E36B) are closed and valves isolating the charcoal adsorber that *is* being used are open.

Charcoal Adsorber Beds Valves

Tag	P&ID Number	Description	Location	POSITION	Check
H9849M	010604048	Upstream manual isolation valve (V31) of charcoal bed F2001H (E36-A)	Top plate front right	CLOSED	
H9852M	010604048	Downstream manual isolation valve (V32) of charcoal bed F2001H (E36-A)	Top plate front right	CLOSED	
H9850M	010604048	Upstream manual isolation valve (V33) of charcoal bed F2002H (E36-B)	Top plate front right	OPEN	
H9851M	010604048	Downstream manual isolation valve (V34) of charcoal bed F2002H (E36-B)	Top plate front right	OPEN	

Tag	P&ID Number	Description	Location	POSITION	Check
H9825M	010604048	Regen vacuum pumpout / backfill cross over valve (V35) for charcoal bed B		CLOSED	
H9824M	010604048	Regen vacuum pumpout / backfill cross over valve(V36) for charcoal bed A		CLOSED	
H9817M	010604048	Manual isolation valve, to evacuation line from low pressure compressor return line		CLOSED	
H9819M	010604048	Manual isolation valve (V43) of evacuation line from vacuum pump		CLOSED	
H9818M	010604048	Manual blowdown dump or external source connection valve(V44) for evacuation header section isolated by valve **H9819M**		CLOSED	

No.1 Engine maintenance valves

Tag	P&ID Number	Description	Location	POSITION	Check
H9828M	010604048	Manual isolation valve (V61) evacuation line for Inlet side to expander EX8A (E37A)		CLOSED	
H9829M	010604048	Manual isolation valve (V63) evacuation line for Inlet side to expander EX8B (E37B)		CLOSED	
H9842M	010604048	Manual isolation valve (V18) engine purge line out from outlet side of expander EX9A (E37A)		CLOSED	
H9831M	010604048	Manual isolation valve (V25) engine purge line to Inlet side to expander EX8B (E37B)		CLOSED	

No.2 Engine maintenance valves

Tag	P&ID Number	Description	Location	POSITION	Check
H9836M	010604048	Manual isolation valve (V62) evacuation line for Inlet side to expander EX9A (E39A)		CLOSED	
H9837M	010604048	Manual isolation valve (V64) evacuation line for Inlet side to expander EX9B (E39B)		CLOSED	

H9838M	010604048	Manual isolation valve (V17) engine purge line to Inlet side to expander EX9A (E39A)		CLOSED	
H9839M	010604048	Manual isolation valve (V27) engine purge line to Inlet side to expander EX9B (E39B)		CLOSED	

Engine inlet isolation valves

Tag	P&ID Number	Description	Location	POSITION	Check
H9853M	010604048	Manual isolation valve (V315) inlet to expander EX8A (E37A)		CLOSED	
H9854M	010604048	Manual isolation valve (V325) inlet to expander EX8B (E37B)		CLOSED	
H9857M	010604048	Manual isolation valve (V317) inlet to expander EX9A (E39A)		CLOSED	
H9858M	010604048	Manual isolation valve (V337) inlet to expander EX9B (E39B)		CLOSED	

Coldbox isolation valves

Tag	P&ID Number	Description	Location	POSITION	Check
H9809M	010604048	1660 Coldbox High pressure inlet Manual isolation valve. **H9809M** (V391M)	Left rear corner of 1660 skid	CLOSED	

6.1.2.3 Blowdown of the main heat exchanger high pressure side

1. Install the locking bars in the flywheels if they are not installed. Open valve **H9821M** (V312) and decrease the pressure in-the refrigerator to approximately 5 psig as shown on pressure gauge **PI754H** (PI34).

2. Open valve **H9904A** (V806) to 50% stroke as follows:

   a. Press the SV/MV push-button of the **H9904A** (V806) temperature controller **TC-5** (TIC-806) repeatedly until the MV value is displayed on the controller. This is the output (valve stroke) percentage.

   b. Place the **H9904A** (V806) temperature controller TC-5 (TIC-806) in manual mode by depressing the A/M push- button. The Manual Operation Lamp "M" should be illuminated.

   c. Press the up or down arrow push buttons to attain a 50% stroke output

With compressor running

3. Start a compressor. Ensure that makeup gas is available to the gas management pressure control system.

4. Crack manual valve **H9809M** (V391) open a bit to allow slow pressure build up when the solenoid valve is opened.

5. Place the **H9903A** (V323) control switch, **HS3700** (SS323), in the "Open" position to allow gas to pressurize the main heat exchanger to 240 psig as indicated on PI34.

6. Place the **H9903A** (V323) control switch in the "Close" position.

7. Open valve **H9821M** (V312) to one-half (1/2) turn to blow down main heat exchanger.

8. Close valve **H9821M** (V312) when **PI754H** (PI34) is between 10 and 20 psig.

NOTE: If there is any possibility that water still remains in the heat exchanger, repeat steps 5 through 8.

9. Place the **H9904A** (V806) temperature controller **TC-5** (TIC-806) in automatic mode by depressing the A/M push-button on the controller. **H9904A** (V806) will automatically close.

6.1.2.4 Pump & Purge using HP bottles

After the plant has been shut down and all the sections isolated right after shutdown to contain the contamination in the first heat exchanger HX2500 (E30) and adsorber beds (F2001H/F2002H).

If the compressor is not running and heat exchanger HX2500 (E30) high pressure side needs to be blown down, using bottle gas.

1. Connect a helium bottle with regulator to Valve **H9913M** (V397). A high pressure regulator is required to regulate to 250 psig.

2. Keep coldbox isolation manual valve **H9809M** (V391) closed.

3. Place the **H9903A** (V323) control switch, **HS3700** (SS323), in the "Open" position to allow gas to pressurize the main heat exchanger to 230 psig as indicated on PI34.

6. Place the **H9903A** (V323) control switch in the "Close" position.

7. Open valve **H9821M** (V312) to one-half (1/2) turn to blow down main heat exchanger.

8. Close valve **H9821M** (V312) when **PI754H** (PI34) is between 10 and 20 psig.

NOTE: If there is any possibility that water still remains in the heat exchanger, repeat steps 5 through 8.

9. Place the **H9904A** (V806) temperature controller **TC-5** (TIC-806) in automatic mode by depressing the A/M push-button on the controller. **H9904A** (V806) will automatically close.
10. When completed, close valve **H9813M** (V397) from bottle gas.

6.1.2.5 Regeneration of 80K Charcoal adsorbers

NOTE: Only one adsorber can be regenerated at a time.
If the plant has been shut down for a while both adsorbers should be regenerated.

1. Select the adsorber for regeneration.

2. Open the in line valves to the standby adsorber allowing both adsorbers to operate in parallel.

3. Isolate the contaminated adsorber from the gas stream using the corresponding valves for the bed.

Beds Valves

	Adsorber A Isolated for regen	**Adsorber B Isolated for regen**
Closed	**H9849M** (V31)	**H9850M** (V33)
Closed	**H9852M** (V32)	**H9851M** (V34)
Open	**H9850M** (V33)	**H9849M** (V31)
Open	**H9851M** (V34)	**H9852M** (V32)

4. Open valve **H9818M** (V44) to vent to atmosphere

5. Slowly open valve **H9825M** (V35) **Bed A** or **H9824A** (V36) **Bed B** to bleed the pressure to the gas bag or atmosphere.

6. Verify the temperature controller TC-6 (TIC-1) located on the lower instrument subpanel *is* set to a 40°C temperature setpoint.

CAUTION: DO NOT EXCEED 40°C.

7. Turn heater on by selecting bed E36A or E36B on the instrument subpanel.
8.Start the auxiliary vacuum pump attached to connection "A" at the rear of the cabinet after the filter has reached approximately 30°C or higher.

9. Close valve **H9818M** (V44).

10. Open valve **H9819M** (V43).

11. Evacuate for a period of approximately four hours while heat is being applied.

12. Switch off the heater.

13. Close valve **H9819M** (V43).

14. Shut off the customer supplied vacuum pump

15. Back fill the adsorber by cracking open using either valve **H9852M** (V32) **Bed A** or **H9851M**(V34) **Bed B**.

Close **H9852M** (V32) **Bed A** or **H9851M** (V34) **Bed B** after back fill is complete.

16. Adsorber precool
If the plant is already running, and therefore, it is necessary to precool adsorbers before putting it back into service, proceed as follows:
a. Open valve **H9849M** (V31) **Bed A** or **H9850M** (V33) **Bed B**.
b. Open valve **H9817M** (V42), which connects to the low pressure side of the plant.

Tag	P&ID dwg	Description	Location	Position	Check

c. ***Slowly*** open valve **H9825M** (V35) **Bed B** or **H9824M** (V36) **Bed A** to bleed gas back to the return (low pressure side) side of the refrigerator.

****
CAUTION: DO NOT OPEN VALVE H9825M MORE THAN NECESSARY TO BLEED A SMALL FLOW. SUPPLY PRESSURE AT PI747H (PI33) WILL FALL OFF RAPIDLY WITH FULL OPEN VALVE.

****

d. Close valve **H9849M** (V31) **Bed A** or **H9850M** (V33) **Bed B**.
e. Close valve **H9825M** (V35) **Bed B** or **H9824M** (V36) **Bed A**.
f. Close valve **H9817M** (V42).

==========

6.1.3 Liquid Helium 1000 Gallon Storage Dewar Preparation

6.1.3.1 To prepare the dewar for cooldown with the 1660 plant

LI3314H: Local liquid level Differential Pressure gage
Open manual valve **H3496M**
Open manual valve **H3498M**

PI3314H: Local gage Dewar pressure
Open valve **H3491M**

FIC3304H: Local gage Dewar neck flowmeter / controller
Open the metering valve on the flowmeter

Valve **H4911M** should be closed, if the helium volume has been cleaned out, otherwise the helium dewar is open to atmosphere.

Close valve **H3499M**: Cooldown return back to low pressure return line to compressor suction.

Verify heater variac controller JIC **3301H** is at 0.0 zero.

LI3313H: Superconducting level probe is off, until the dewar has reached below 20K.

Tag	P&ID Number	Description	Location	POSITION	Check
H3490M	010604034	Manual Isolation valve, on Dewar 1/2" T line, bottom feed coming Lhe from 1660 JT valve	Top of dewar, bayonet line	OPEN	
H3491M	010604034	Manual Isolation valve, on Dewar 3/4" T line, 2-phase feed coming Wet expander into dewar	Top of dewar, bayonet line	**CLOSE LOTO**	
H3492M	010604034	Manual Isolation valve, on Dewar 3/4" T line, vapor return to 1660 low pressure return	Top of dewar, bayonet line	OPEN	
H3493M	010604034	Manual Isolation valve, on Dewar 1/2" T line, bottom liquid draw Lhe from dewar	Top of dewar, bayonet line	CLOSE	
H3494R	010604034	Relief valve, 1000 Gal dewar, 40 psig	Top of dewar	RELIEF	
H3496M	010604034	Manual Isolation valve, Hi side, Liquid level head DP sensor LI 3314H	Top of dewar	OPEN	

H3497M	010604034	Manual Isolation valve, exit vent for vapor cooled shield / neck intercept bleedflow	Top of dewar	CLOSE	
H3498M	010604034	Manual Isolation valve, Low side, Liquid level head DP sensor LI 3314H	Top of dewar	OPEN	
H4911M	010604034	Purge Valve for helium storage Dewar	Top of dewar	CLOSE	
H3499M	010604034	Manual Isolation valve vapor side return during cooldown of dewar back to compressor suction	Top of dewar	CLOSE	
V3304M	010604034	Bleed up valve for insulating vacuum space liquid helium dewar	Top of dewar	CLOSE	
V3306M	010604034	isolation valve for vacuum gage	Top of dewar	CLOSE	
FIC3304H	010604034	Rotometer Flow indicator of vapor cooled shield flow with manual metering valve	Front panel dewar	OPEN	
EHTR-1	010604034	Boil-off heater in dewar, variac	Front panel dewar	ZERO %	
LI3313H	010604034	Liquid level sensor for Lhe dewar, Superconducting probe	HMI		
LI3314H	010604034	Liquid level sensor for Lhe Dewar, local DP level gage	Front panel dewar		
LT3313H	010604034	Liquid Helium Storage Dewar level Probe	Top of dewar		
PI3314H	010604034	Pressure indicator, local dial gage, liquid helium storage dewar pressure	Front panel dewar		
PT3313H	010604034	30 psia pressure sensor, Liquid helium dewar	HMI		
PT3315V	010604034	Vacuum gage, thermocouple DV-6	Front panel dewar	<50 mTorr	

6.1.3.2 Independent Pump and purge of LHe dewar

An independent pump and purge on the helium volume can be done via manual valve **H4911M**
located on the dewar neck area and by closing the following Supply and withdrawal valves.

H3490M
H3491M
H3492M
H3493M

Proceed with the pump and purge: evacuate to less than 5 Torr and back fill to 1 atmosphere. Repeat this 2 more times.

Open the following Supply and withdrawal valves after completion of the independent pump and purge:

H3490M
H3492M
H3493M

6.1.4 Subcooler Preparation

6.1.4.1 Helium Bath Volume Pump and Purge

To pump and purge the subcooler independently, the two main valves that isolates the helium bath volume from the system, **H3330A** and **H3486M** should be closed already.

Tag	P&ID Number	Description	Location	POSITION	Check
H3330A	010604071	Actuated control valve from Liquid helium draw from 1000 gal storage dewar to subcooler fillvalve	On distribution valvebox PHPK	CLOSE	
H3486M	010604071	Manual isolation valve: Return vapor subcooler bath to vapor return line 1660 Plant BC-2	On transfer line behind subcooler	CLOSE	

Close **H3373M** to isolate ½-psig shutdown relief valve
Open instrument valve **H3376M** to **PT3300H**
Close cooldown return valve **H3377M**
Close shield return valve **H3378M**
Leave/ turn off Superconducting level sensor controller **LT3303H** until the subcooler is cold.
Temperature sensor **TT3300H** can be used to monitor cooldown.

Independent pump and purge can be done by removing **H3372R** and using **H3373M** for pump and backfill.

Pump and backfill can be done together with the low pressure side of the1660S coldbox, by opening valve **H3486M.**

Tag	P&ID Number	Description	Location	POSITION	Check
H3373M	010604087	Isolation valve for 1/2 psig relief **H3327R**	On subcooler skid	CLOSE	
H3376M	010604087	Isolation valve for instrumentation	On subcooler skid		
H3377M	010604087	Cooldown return valve to compressor suction	On subcooler skid	CLOSE	
H3378M	010604087	Isolation valve for shield flow flowmeter	On subcooler skid	CLOSE	
FE3303	010604087	Heat shield outlet flow	On subcooler skid	CLOSE	
LT3303H	010604087	Subcooler level probe	On subcooler skid	OFF	
PI3302H	010604087	Pressure indicator, local dial gage, subcooler bath pressure	On subcooler skid		

6.1.4.2 Subcooler insulating vacuum volume

Verify vacuum level on vacuum gage **PT3301V** by plugging in a local thermocouple gage readout for a DV-5/DV-6 gage.
If the pressure is above 50 micron, connect a vacuum pump to pump-out port **H3534R** and evacuate to below 50 micron.

==========

6.1.5 Distribution Valvebox / Cryoduct Preparation

The distribution valvebox allows the plant to supply flow to the Large vertical test dewar and/or the ERL cryomodules.
Most of the valves are on the PHPK distribution valve box, some valves are on the transfer lines. Refer to P&ID 010604071.

6.1.5.1 Distribution Valvebox / Cryoduct (VJ bundle) insulating vacuum volume

The valve box / cryoduct share the same insulating vacuum volume.
The volume is engineered to have active pumping, using a turbo-molecular pump.
The turbo pump is located on the cryoduct jacket near the distribution valve box.
If the volume was backfilled with nitrogen for maintenance, the volume can be roughed down via a 1.5 inch butterfly vacuum valve on the tee off port for the turbo pumping system.
Connect a rough vacuum pump with a booster pump to rough the volume down to 50 millitorr to allow the turbopump to cross over.
You will need 2 weeks of ambient temperature degassing to get the vacuum level in the 10-5 Torr range.

==========

6.1.6 Wet Expander Preparation

Ensure the locking bar on the expander flywheel is in place.

6.1.6.1 Pump and purge of wet expander skid to low side of 1660 plant

Pump and purge of the wet expander will be done concurrently with the low pressure side of the plant. The following valves, which tie both the upstream side and downstream side of the expander, need to be opened to connect to the cooldown return to the low side of the plant.

Tag	Description	Position	Check
H3385A	Inlet actuated isolation valve	CLOSED	
H3384M	Manual isolation to cooldown return	OPEN	
H3392M	Manual isolation to cooldown return	OPEN	
H3391M	Manual isolation expander discharge side. Remain closed, if the 1000 gal dewar is already clean and operational	CLOSED	
H3382M	Independent helium supply/evacuate manual purge valve	CLOSED	

6.1.6.2 Independent Pump and purge

Valve **H3382M** can be used, if an independent pump and backfill is to be done.

Tag	Description	Position	Check
H3385A	Inlet actuated isolation valve	CLOSED	
H3384M	Manual isolation to cooldown return	CLOSED	
H3392M	Manual isolation to cooldown return	CLOSED	
H3391M	Remain closed, if the 1000 gal dewar is already clean and operational	CLOSED	
H3382M	Independent helium supply/evacuate manual purge valve	USED FOR PUMP AND BACKFILL	

Evacuate the volume to 5 Torr and back fill with 99.99 Helium to 1 atmosphere.

Repeat this process 3 times.

==========

6.1.7 The ERL cryomodules 5-CELL and SRFGUN Cryostat System Preparation

The ERL cryomodules and the distribution system on the ERL side can be pumped down and back fill at the same time.

For the case where ERL Cryostats are ONLINE and the Large Vertical Test Dewar is OFFLINE:

Large vertical test dewar side:

With the large vertical test dewar not online, the following valves are already LOTO out closed.

Tag	Location P&ID	Description	Location Hardware	Position	Check
H3320A	010604071	Low pressure return from 40" Vertical Test Dewar to 20 Torr header	Distribution Valve box	LOTO CLOSED Handwheel	
H3322A	010604071	1.1 atm vapor return from 40" Vertical Test Dewar	Distribution Valve box	LOTO CLOSED Handwheel	
H3327A	010604071	Liquid supply isolation to 40" VTD from 1000 gallon LHe dewar	Distribution Valve box	LOTO CLOSED Handwheel	
H3328A	010604071	Liquid supply isolation to 40" VTD	Distribution Valve box	LOTO CLOSED Handwheel	
H3512A	CA6010001	Liquid fill valve into 40" VTD	40" Vertical Test Dewar	LOTO CLOSED	
H3513A	CA6010001	Cooldown supply bottom valve into 40" VTD	40" Vertical Test Dewar	LOTO CLOSED	
H3522M	CA6010001	Warm helium supply purge manual metering valve	40" Vertical Test Dewar	LOTO CLOSED	
H3521A	CA6010001	Warm helium supply purge solenoid isolation valve	40" Vertical Test Dewar	LOTO CLOSED	
N3315A	010604071	LN2 control to N2 shield 40" VTD	On Cryoduct trunk above valvebox	LOTO CLOSED	
N3343M	CA6010001	External supply from bottle: manual metering valve, Nitrogen or helium	40" Vertical Test Dewar	LOTO CLOSED	

Regardless whether the 28 inch dewar is connected the following valves need to be lined up to isolate the small dewar lines.

28 Inch Test Dewar Small Block House side valve line up

Tag	Location P&ID	Description	Location	Position	Check
H3316A	010604071	Vapor return control valve to 20 Torr Header from small test dewar	Outside small block house, near 1000 Gal Cryofab dewar	CLOSE	
H3317M	010604071	Manual Isolation valve for atmospheric discharge	Outside small block house, near 1000 Gal Cryofab dewar	CLOSE	
H3488A	010604071	Return Cross over valve from small test dewar volume to 1.2 atm low pressure line back to Sullair helium compressor suction	Outside small block house, near 1000 Gal Cryofab dewar	CLOSE	
H3487A	010604071	Small Control valve, small test dewar volume to 20Torr header to Kinney vacuum pump	Outside small block house, near 1000 Gal Cryofab dewar	CLOSE	
H3545A	010604071	Test Dewar atmospheric vent valve	Outside small block house, near 1000 Gal Cryofab dewar	CLOSE	

Bolt on the Conflat flange on the vapor return line on the 4 inch return line from the test dewar, when the test dewar is not connected.

==========

The following will line up the valves for pumpdown of both cavities

ERL side distribution valve line-up Pump and backfill

Tag	Location P&ID	Description	Location	Position	Check
H3323A	010604071	Actuated Helium Valve, Return vapor from ERL cryomodules to 4.5K cryoplant	On distribution valvebox PHPK	OPEN	
H3324A	010604071	Actuated Helium Control Valve, Return vapor from ERL cryomodules to 20 Torr helium vacuum header	On transfer line coming from ERL VJR	OPEN	
H3326M	010604071	Manual Purge valve, on Vapor return line from ERL CRYOMODULES	On distribution valvebox PHPK	CLOSE	
H3328A	010604071	Actuated valve with hand wheel, isolates Subcooler subcooled supply to Test dewar.	On distribution valvebox PHPK	CLOSE	
H3329A	010604071	Actuated valve, isolates Subcooler subcooled supply to ERL cryomodules.	On distribution valvebox PHPK	CLOSE	
H3332A	010604071	Actuated control valve. Controls 4 atm Supply helium from plant to subcooler coils	On transfer line behind distribution valvebox PHPK	CLOSE	
H3333M	010604071	Manual Purge valve, on liquid draw line from LHE dewar to valves **H3327A** and **H3330A**	On distribution valvebox PHPK	CLOSE	
H3335M	010604071	Manual Purge valve, on liquid supply line from LHE dewar to test dewar	On distribution valvebox PHPK	CLOSE	
H3336M	010604071	Manual purge valve, on vapor return line from Lhe dewar to 1660 plant	On transfer line behind distribution valvebox PHPK	CLOSE	
H3339M	010604071	Manual purge valve, volume on liquid supply line from subcooler to ERL cryomodules, between valves H3329A and H3353A, H3354A,H3356M,H1404A, H1405A	On distribution valvebox PHPK	CLOSE	
H3341M	010604071	Manual purge valve, volume on liquid supply line through subcooler between valves H3332A and H3328A, H33529A	On distribution valvebox PHPK	CLOSE	
H3342A	010604071	Vapor return control valve to 20 Torr Header from SRF Gun boil-off	On SRF GUN VALVEBOX	OPEN	
H3343A	010604071	Vapor return control valve to 20 Torr Header from 5 cell cavity boil-off	On 5 cell VALVEBOX	OPEN	
H10896A	010604071	20Torr Cold vapor Return valve for 5 cell	On transfer lines, west, near 5-cell cryostat	CLOSED	
H10922A	010604071	20 Torr Cold vapor return valve for 5 cell	On transfer lines, west, near 5-cell cryostat	CLOSED	
H10947M	010604071	Isolation valve for helium shield and lead flows	On manifold end for MKS mass flow controllers	CLOSED	

H3353A	010604071	Actuated control valve, Liquid helium supply top fill reservoir volume for 5 cell SRF cavity	On 5 cell VALVEBOX	OPEN	
H3354A	010604071	Actuated control valve, Liquid helium supply to bottom fill 5 cell SRF cavity	On 5 cell VALVEBOX	OPEN	
H3356M	010604071	Manual isolation valve supply side of 5K circuits SRF Gun cryostat	On 5 cell VALVEBOX	OPEN	
H3360M	010604071	Manual isolation flow, outlet side massflow controller 5K circuit solenoid SRFGun	On manifold for MKS mass flow controllers	OPEN	
H3361M	010604071	Manual isolation flow, inlet side massflow controller 5K circuit solenoid SRFGun	On manifold for MKS mass flow controllers	OPEN	
H3363M	010604071	Manual isolation flow, outlet side massflow controller 5K circuit FPC#1 SRFGun	On manifold for MKS mass flow controllers	OPEN	
H3364M	010604071	Manual isolation flow, inlet side massflow controller 5K circuit FPC#1 SRFGun	On manifold for MKS mass flow controllers	OPEN	
H3366M	010604071	Manual isolation flow, outlet side massflow controller 5K circuit FPC#2 SRFGun	On manifold for MKS mass flow controllers	OPEN	
H3367M	010604071	Manual isolation flow, inlet side massflow controller 5K circuit FPC#2 SRFGun	On manifold for MKS mass flow controllers	OPEN	
H3369M	010604071	Manual isolation flow, outlet side massflow controller 5K circuit Tuner 5 cell Cavity	On manifold for MKS mass flow controllers	OPEN	
H3370M	010604071	Manual isolation flow, inlet side massflow controller 5K circuit Tuner 5 cell Cavity	On manifold for MKS mass flow controllers	OPEN	
H3486M	010604071	Manual isolation valve: Return vapor subcooler bath to vapor return line 1660 Plant BC-2	On transfer line behind subcooler	OPEN	
H3529M	010604071	Manual isolation flow, outlet side massflow controller 5K circuit Endflange-1 SRFGun	On manifold for MKS mass flow controllers	OPEN	
H3530M	010604071	Manual isolation flow, inlet side massflow controller 5K circuit Endflange-1 SRFGun	On manifold for MKS mass flow controllers	OPEN	
H3531M	010604071	Manual isolation flow, inlet side massflow controller 5K circuit Endflange#2 SRFGun	On manifold for MKS mass flow controllers	OPEN	
H3532M	010604071	Manual isolation flow, outlet side massflow controller 5K circuit Endflange#2 SRFGun	On manifold for MKS mass flow controllers	OPEN	
H3533A	010604071	Communication valve for vessel bottom fill line 5-cell system	5-cell valvebox	OPEN	
H3536E	010604071	Thermal mass flowcontroller valve, actuated. 5-cell cavity 5K circuit FPC coupler	On manifold for MKS mass flow controllers	OPEN	
H3537E	010604071	Thermal mass flowcontroller valve, actuated. 5-cell cavity 5K circuit End Flange, FPC side	On manifold for MKS mass flow controllers	OPEN	
H3538E	010604071	Thermal mass flowcontroller valve, actuated. 5-cell cavity 5K circuit End Flange, Tuner side	On manifold for MKS mass flow controllers	OPEN	

H3539E	010604071	Thermal mass flowcontroller valve, actuated. 5-cell cavity 5K circuit Tuner	On manifold for MKS mass flow controllers	OPEN	
H3540E	010604071	Thermal mass flowcontroller valve, actuated. SRFGun End Flange 2	On manifold for MKS mass flow controllers	OPEN	
H3541E	010604071	Thermal mass flowcontroller valve, actuated. SRFGun End Flange 1	On manifold for MKS mass flow controllers	OPEN	
H3542E	010604071	Thermal mass flowcontroller valve, actuated. SRFGun FPC-2	On manifold for MKS mass flow controllers	OPEN	
H3543E	010604071	Thermal mass flowcontroller valve, actuated. SRFGun FPC-1	On manifold for MKS mass flow controllers	OPEN	
H3544E	010604071	Thermal mass flowcontroller valve, actuated. SRFGun solenoid	On manifold for MKS mass flow controllers	OPEN	
H3551M	010604071	Manual valve to atmosphere	On manifold for MKS mass flow controllers	CLOSED	
H3552M	010604071	Manual valve to atmosphere	On manifold for MKS mass flow controllers	CLOSED	
H10930M	010604071	Manual isolation flow, outlet side massflow controller 5K circuit FPC on 5 cell Cavity	On manifold for MKS mass flow controllers	OPEN	
H10928M	010604071	Manual isolation flow, outlet side massflow controller 5K circuit FPC on 5 cell Cavity	On manifold for MKS mass flow controllers	OPEN	
H10934M	010604071	Manual isolation flow, outlet side massflow controller 5K circuit Endflange-FPCside on 5 cell Cavity	On manifold for MKS mass flow controllers	OPEN	
H10932M	010604071	Manual isolation flow, outlet side massflow controller 5K circuit Endflange-FPCside on 5 cell Cavity	On manifold for MKS mass flow controllers	OPEN	
H10938M	010604071	Manual isolation flow, outlet side massflow controller 5K circuit Endflange-Tunerside on 5 cell Cavity	On manifold for MKS mass flow controllers	OPEN	
H10936M	010604071	Manual isolation flow, outlet side massflow controller 5K circuit Endflange-Tunerside on 5 cell Cavity	On manifold for MKS mass flow controllers	OPEN	

6.1.7.1 Pump and backfill

To clean out the cavity helium volumes and distribution lines, pump-out and backfill can be done using the Kinney vacuum skid.

Start-up the Kinney pump and pumpdown the cavity helium volumes and the distribution piping volume.

Backfill of the system can be done via manual purge valve **H3339M** by using the connection to **H3554M**, ambient clean high pressure helium from compressor system.

Repeat the process 3 times.

6.1.7.2 Insulating Vacuum

Verify with vacuum group that cryomodule insulating vacuum has been established and has been maintained for preferably 2 weeks prior to cooldown.

6.1.7.3 Beam Tube vacuum

Verify with vacuum group that beam tube vacuum is in the UHV range prior to cooldown.

6.1.8 ERL704MHz SRF Gun Cryostat and valvebox System Preparation

6.1.8.1 Pump and backfill

This is done along with the SRFGUN when both cryostats are warm.

6.1.8.2 Insulating Vacuum

Verify with vacuum group that cryomodule insulating vacuum has been established and has been maintained for preferably one week prior to cooldown.

6.1.8.3 Beam Tube vacuum

Verify with vacuum group that beam tube vacuum is in the UHV range prior to cooldown.

6.1.9 Cold Cathode Loop Preparation

Once the cathode lines have been connected to the cathode, the system can be purged.

N2 Purge

- Connect a N2 bottle to the purge valve **N3306M**
- Leave **N3310A** in auto at a setpoint of 15 psig
- Open valve **N3345M**
- Open **N3307A**
- Open **N3304M** to check that a purge is flowing
- Close **N3304M** and let it vent through the normal vent

Tag	P&ID Number	Description	Location	POSITION	Check
N3304M	010604088	Manual isolation valve, LN2 purge	SRF GUN Valvebox EDEN	OPEN	
N3306M	010604088	Manual isolation valve, GN2 purge	SRF GUN Valvebox EDEN	OPEN	
N3307A	010604088	Actuated Control valve, LN2 phase seperator fill	SRF GUN Valvebox EDEN	OPEN	
N3310A	010604088	Actuated Control valve, LN2 pressure control	SRF GUN Valvebox EDEN	AUTO @ 15 psig	
N3345M	010604088	Manual isolation valve, cathode supply	On transfer line to cathode cart	OPEN	

After completion of the purge close **N3306M**

Tag	P&ID Number	Description	Location	POSITION	Check
N3304M	010604088	Manual isolation valve, LN2 purge	SRF GUN Valvebox EDEN	CLOSE	
N3306M	010604088	Manual isolation valve, GN2 purge	SRF GUN Valvebox EDEN	CLOSE	

6.1.10 Large 40 inch Vertical Test Dewar Preparation

Tag	Location P&ID	Description	Location	Position	Check
H3335M	010604071	Manual Purge valve, on liquid supply line from LHE dewar to test dewar	On distribution valvebox PHPK	CLOSED	
H3321M	010604071	Manual Purge valve, on Vapor return line from 40 inch test dewar	On distribution valvebox PHPK	CLOSED	
H3328A	010604071	Actuated valve with hand wheel, isolates Subcooler subcooled supply to Test dewar.	On distribution valvebox PHPK	LOTO CLOSED	
H3327A	010604071	Actuated control valve from Liquid helium draw from 1000 gal storage dewar to VTD supply	On distribution valvebox PHPK	LOTO CLOSED	
H3320A	010604071	Low pressure return from 40” Vertical Test Dewar	Distribution Valve box	LOTO CLOSED	
H3322A	010604071	Liquid supply isolation to 40” VTD	Distribution Valve box	LOTO CLOSED	
H3512A	CA6010001	Liquid fill valve into 40” VTD	40” Vertical Test Dewar	LOTO CLOSED	
H3513A	CA6010001	Cooldown supply bottom valve into 40” VTD	40” Vertical Test Dewar	LOTO CLOSED	
H3522M	CA6010001	Warm helium supply purge manual metering valve	40” Vertical Test Dewar	LOTO CLOSED	
H3521A	CA6010001	Warm helium supply purge solenoid isolation valve	40” Vertical Test Dewar	CLOSED	
H3514M	CA6010001	Manual pump out port, for helium volume, isolation valve	40” Vertical Test Dewar	CLOSED	
N3315A	010604071	Liquid Nitrogen supply control valve thermal shield	Distribution VJR line to VTD	LOTO CLOSED	
N3343M	CA6010001	External supply from bottle: manual metering valve, Nitrogen or helium or dry air	40” Vertical Test Dewar	LOTO CLOSED	
N3314M	CA6010001	vent	40” Vertical Test Dewar	CLOSED	
N3342A	CA6010001	External supply from bottle solenoid isolation valve	40” Vertical Test Dewar	CLOSED	

6.1.10.1 40 inch Vertical Test Dewar Pump and backfill

To clean out the helium volume after insertion of the test article, the system can be back filled via the connected helium supply from the compressor system supply line, via metering valve **H3522M** and solenoid isolation valve **H3521A** or by a second purge line connection to **N3343M** and **N3342A** by connecting a helium bottle to this connection. Set the regulator to 2 psig.

Evacuation is done using a roughing pump connected to the 2 inch line via valve **H3514M**.

Open valve **H3514M.**
Pumpdown the test dewar volume to 5 Torr. [dilution of 100]
Backfill by opening either solenoid **H3521A** or **N3342A**
Backfill to 1 atm!! only

Repeat the process 3 times.

Wait 30 minutes after the 3rd backfill before pumping down.

Isolate the pumpout line by closing valve **H3514M.**

The VTD system is cleaned and ready for cooldown once the test article check out has been completed.

Guard vacuum connection VTD Top Plate flange
The TOP PLATE of the 40 inch dewar has a double o-ring seal for the flange area.
There is an annular space between the 2 o-ring grooves.
The space can be pumped by a roughing pump to guard any leakage from the atmosphere into the helium volume. This is really only required if the system is being operated below atmosphere.
Upon completion of the pump and backfill of the helium volume, the guard vacuum can be connected to the 2” roughing line and a smaller vacuum pump can be connected to pump on this guard vacuum annulus.

6.2 Operation

6.2.1 Compressor Operation

6.2.1.1 Compressor start-up

Initial pressurization.
This is done to have sufficient starting gas density on the discharge side, to minimize oil carry over problems during initial loading and charcoal bed abrasion.

Pressurize the system high side volume to at least 50 psig.
This can be done by opening the mass out valve and letting in inventory until a pressure of 50 psig is reached.

Gas management valve

Set the upper limit for the make-up valve to 50%

Tag	Description	Setpoint	Max valve limit
H3301A	by-pass valve	1.1 atm	100%
H3300A	pumpback (mass-out)	16	100%
H3302A	Make-up (mass–in)	16-deadband	50%

Put the bypass valve, **H3301A** in auto mode.

- Start the compressor using the start button the compressor control panel.
- Load the compressor gradually by pressing the load button on the compressor panel to 20%.
- Allow the discharge pressure to build to 10 atm before loading the compressor to 50%.
- Allow the discharge pressure to build to 16 atm before loading the compressor to 100%.
- As you do this, watch the bypass valve react to maintain suction pressure.

The compressor should operate completely on the bypass valve with the gas management valves controlling.

6.2.2 Oil Coalescers Drainage checkout

For initial operation, the oil drain valve adjustment is critical.
The adjustment is done just after startup.

Stage	Inlet Oil concentration	Approximate Oil collection rate (after saturation)
1st stage	300 ppm	60 gram per hr or 0.1 liter/hr
2nd stage	50 ppm	10 grams per hr 0.015 liter/ hr
3rd stage	1 ppm	0.2 grams per hr
4th stage	0.1 ppm	<.02 grams per hr

Open drain valves on the 1st and 2nd stages. Close or Leave the drain valves closed on the 3rd and 4th stages per line up table.

The coalescers need to saturate, wetted, with oil before drainage will start, i.e. before liquid start to accumulate in the bottom of the vessel. To see oil in the level sight glasses, some accumulation time is required.

Oil Return

Return sight glasses on oil return line to compressor suction

These can be used to verify oil return when the bypass valve on the oil float drain valve is opened.

Drain Floats Checkout
To verify that the automatic float drain valves operate properly, wait the appropriate saturation time for each stage and crack open the bypass to verify on the return line sight glasses if any oil is returning.

1st stage
1st stage saturation time takes at least 48 hours of operation to saturate.
Close the oil drainage valve on one of the 1st stage coalescers, and wait there to observe the start of accumulation. Within approximately 30 min of closing the isolation, the 1st stage should show oil accumulation in the sight glass. Time the level rise and level rise points to collect data on the drainage rate.

2nd stage
2nd stage oil saturation you will need to run the compressor for 10 - 14 days.
The oil level should still be checked regulary, in the event something happens to the 1st stage, i.e. the drain valve stops working.

3rd stage
3rd stage oil saturation you will need to run the compressor for several months.
The oil level should still be checked regulary, in the event something happens to the 2st stage, i.e. the drain valve stops working.

4th stage
4th stage oil saturation you will need to run the compressor for half a year.
The coalescers can be changed out annually if run continuous.

6.2.3 1660S Coldbox Operation

6.2.3.1 300K to 100 K Cooldown of 1660S Cold box and Liquid Helium Dewar

In this mode only the LN2 precooler circuit is used to supply 100K helium gas to circulate through the heat exchanger stack and cooldown the 1000 Gallon liquid helium dewar. This first mode used during the initial stages or cooldown of an external mass or dewar using helium flow and liquid nitrogen assist with no expanders running.
The helium then passes through one or both of the dual charcoal filters (E36A or E36B) where impurities are removed.

The warm gas from the dewar will be returned to compressor suction side via the cooldown return line on the dewar neck.

The cooldown will be slow, since the maximum flow through the **JT-5** valve will be only 2 g/s at 100K.

LN2 PRECOOLER START
Verify LN2 supply at BC-6
Activate LN2 control fill valve **N6100A** (V392)
Verify the setpoint is at 80% Full level **DPT6090** (DPT-392) in the boiler.

Flow split control valve **H9904A** (V806) setup
During this mode of operation the operator activates the "Cooldown Mode" signal to the M1660 refrigerator. This cooldown signal results in **H9904A** (V806) operating at full stroke (full flow through the Precooler, E81), and **no** flow through heatexchanger HX2500 (E30).

Pressurize heat exchanger high side:

1. Close manual valve **H9809M (V391)**.
2. Start the compressor if it is not running
3. Close JT valve **JT-5** (JT-307)
4. Open solenoid isolation valve **H9903A** (V323) by flipping the front panel switch to “local”.
5. If an adsorber bed is not lined up yet, select one that has been regenerated for lineup.
6. To pressurize the heat exchanger stack high side, slowly crack open cold box manual isolation valve **H9809M (V391)** until the pressure reads compressor discharge pressure of around 230 psig.
7. Switch the front panel switch for valve **H9903A** (V323) back to “AUTO” mode.

<u>LHe Dewar valve line up</u>

Close valve **H3331A** on the operator screen.
Manual valves **H3490M**, **H3491M**, **H3492M**, **H3493M**, should already be open.
Open manual valve **H3493M** on the dewar bayonet if closed.
Open **H3499M** to allow cooldown return gas to return to the compressor suction return line.
Close valve **H9914A** on the 1660 coldbox.

Switch the **JT-5** control to AUTO on the front panel.
Cooldown of dewar can start by opening **JT-5** valve fully via the operator screen or locally on the 1660 panel by flipping the LOCAL/REMOTE switch to local.

For efficient cooldown the return flow path can be switched over to 1660 coldbox once the cooldown has been ongoing for a while.

- Open control valve **H3331A**.
- Open valve **H9917A** and **H9905A** on the 1660 coldbox.
- Flip the “cooldown/auto” switchover switch for Flow split control valve **H9904A** (V806) to “auto” mode. This will allow the control valve to balance the flow through the first heat exchanger and precooler to recover some refrigeration from the cold gas returning from the dewar.

Temperature sensor **TT663H** can be monitored for the return temperature from the dewar.

6.2.4 300K - 100 K Cooldown of the Subcooler

Close manual Return vapor valve **H3486M** on the return transfer line from the subcooler.

After the cooldown of the 1000 Gallon dewar using just LN2 precooling circuit or during the cooldown if the dewar to 100K, **H3330A** can be opened to allow cold gas from the liquid helium dewar to enter the subcooler helium bath volume.

The dewar cooldown is supplied via the plant's Joule-Thompson valve, **JT5** (JT307). With 100K gas the flowrate through the valve will be very low, so it will take a while.

The return from the subcooler warm gas will be via cooldown return valve **H3377M**.

Open manual valve **H3377M** on the subcooler.

This will return the warm gas to the low pressure return line to compressor suction. Temperature sensor **TT3317H** located on the subcooler helium vessel can be monitored during the cooldown.

Once the temperature drops below 200K, the flow can be returned to the 1660 coldbox.

Open the vapor return valve, **H3486M**, from the subcooler to the 1660 plant. This will return the flow back to the 1660 and via **H9917A** and **H9905A** to the first heat exchanger HX2500 (E30).

6.2.5 100K to 4K Cooldown of 1660, LHe storage dewar, and subcooler.

Leave the valve line up the same use for the 300K to 100K cooldown.

To start the expansion engines proceed as follows:

1. Open engine isolation valves for either Engine A or Engine B.

Open the engine **exhaust** isolation valves for the engine to be placed on-line:

H9856M (V316) Set A
H9860M (V318) Set A
H9855M (V326) Set B
H9859M (V328) Set B

Open the engine **inlet** isolation valves for the engine to be placed on-line:

H9853M (V315) Set A
H9857M (V317) Set A
H9854M (V325) Set B
H9858M (V327) Set B

2. Open valve **H9913A** (V381) and close or leave close valve **H9908A** (V382).

3. Press the appropriate ENGINE START button. If both expanders are required the second set of expander can be started after running 10 minutes on the first set.

   Set the switch for both engines into REMOTE Mode on the front panel.
   Set the VFD speed on the operator screen to 80 rpm

When the return stream approaches 60K the flow is redirected to return to the refrigerator between heat exchangers E32 and E33 via valve **H9907A** (V389).

Close valve **H9905A** (V387)
Open valve **H9907A** (V389).

When the return stream has cooled to 20K the gas supply is redirected to E34 via Valve **H9915A** (V355).

Close valve **H9907A** (V389)
Open valve **H9915A** (V355).

Once the liquid storage dewar is cold, throttle the fill valve H3330A to a minimum to keep a small cold flow going to the subcooler.

Open the flowmeter valve for the dewar neck intercept, **FIC3304H**, and set this to 5 SCFH.

The plant should start liquefying once the return temperature **TT663H** (TE-2) reaches 4.9K.

6.2.6 Startup and cooldown of 1660 Coldbox with liquid in LHe dewar

With the plant off and with liquid helium in the dewar, the system would have been secured with the dewar isolated and sitting on the 2 psig check valve on valve **H4911M**.

Liquid withdrawal to the subcooler, vapor return to the 1660, wet-expander supply, and liquid supply from **JT5** valve are all closed.

Table 6.2.6-a

Tag	P&ID Number	Description	Location	POSITION	Check
H3330A	010604071	Subcooler bath fill valve. Actuated control valve from Liquid helium draw from 1000 gal storage dewar to subcooler fill line	On distribution valvebox PHPK	CLOSED	
H3327A	010604071	Actuated control valve from Liquid helium draw from 1000 gal storage dewar	On distribution valvebox PHPK	CLOSED	
H3331A	010604071	Actuated control valve. Vapor return from Liquid helium storage dewar	On transfer line behind distribution valvebox PHPK	CLOSED	
H9912A	010604048	Actuated isolation valve (V367) between JT supply and bayonet BC-1	Top plate rear	CLOSED	

Valve lineup before startup of 1660 plant

Table 6.2.6-b

Tag2	P&ID Number	Description	Location	POSITION	Check
H4911M	010604034	Pump and purge / shut down check, top side, isolation valve, vapor space	Top of dewar	OPEN Check valve	
H3499M	010604034	Manual Isolation valve vapor side return during cooldown of dewar back to compressor suction	Top of dewar	OPEN	
H9914A	010604048	Actuated isolation valve (V356) between Return bayonet line BC-2 and Exchanger HX2504 (E34)	1660 Top plate rear,	OPEN	
H3331A	010604071	Actuated control valve. Vapor return from Liquid helium storage dewar	On transfer line behind distribution valvebox PHPK	OPEN 25%	

1. Start the compressor following instruction in the compressor section.
2. LN2 precooling loop.
   a. Activate the LN2 precooling boiler pot level controller by opening the air valve labeled N6090 to the I/P controller
   b. Dial in a setpoint of 80% level
   c. **N6100A** (V392). Check that this is being controlled to maintain an 80% Full level (DPT-6090N) in the boiler.
3. Place the temperature controller TIC-806 in auto mode.
4. Set the setpoint for **JT-5** valve control to 12K.
5. Set the **JT5** temperature control Hi limit to 50%.
6. Remove the flywheel locking bar from the engine to be placed on-line.
7. Open the engine exhaust isolation valves for the engine to be placed on-line:
   H9856M (V316) Set A
   H9860M (V318) Set A
   H9855M (V326) Set B
   H9859M (V328) Set B
8. Open the engine inlet isolation valves for the engine to be placed on-line:
   H9853M (V315) Set A
   H9857M (V317) Set A
   H9854M (V325) Set B
   H9858M (V327) Set B
9. Open valve **H9913A** (V381) and close valve **H9908A** (V382).
10. Set the switch for both engines into REMOTE Mode on the front panel.
11. Set the VFD speed on the operator screen to 60 rpm
12. Start the engine. The engine will rotate at minimum speed to allow cooldown of the pistons.
13. The plant will run at minimum capacity to allow a small flow to go through the JT valve and into the transfer line to the dewar for gentle cooldown and minimizing the boil-off surge from the warmer gas.
14. Once the temperature has dropped to the cold expander inlet temperature, **TT658H**, has reached 12K, the JT valve will start controlling.

15. Observe the dewar pressure and the return temperature to **TT663H**. If the dewar pressure keeps rising, put the **JT-5** valve in manual and close it down to a position of 20%.
16. Observe the dewar pressure and see if it the pressure is rising.
17. Observe the dewar level and see if it the level is dropping.
18. If the pressure keeps rising, close the JT valve completely when the pressure reaches 1.5 atm and wait for the pressure to drop back to 1.35 atm, then re-open the JT valve.
19. Put the JT valve in auto when the pressure has stabilized.
20. Once the pressure is stable, automatic valve **H3331A** can be put in auto at the current pressure of 1.35 atm. This can later be set to 1.4 atm to transfer liquid to the subcooler.

6.2.7 Cooldown of cryoduct transfer lines and distribution valvebox system

6.2.7.1 Insulating Vacuum

The pumping of the insulating vacuum space should have started several weeks back.
Verify that the insulating vacuum at the turbo inlet is reading around 1E-5 Torr.

6.2.7.2 Transfer line LN2 shield

The main Liquid helium supply line from the subcooler to the ERL cryomodules is shielded with an LN2 cooled shield. This line will already be cold if the 1660 plant is operational and is cooled when the LN2 main supply is brought online.

6.2.7.3 Lines and valves cool down

The valves and transfer lines will cool down along with the cryomodules.

6.2.8 Cool down of SRF Gun Cryostat / Gun valvebox and 5-cell Cavity Cryostat / valvebox

After preparation of the cryostat and valve-boxes cool down can begin.

- 1660 plant is up and running
- Liquid in the Liquid helium storage dewar is at least 2000 liters.
- Liquid nitrogen dewar is at least 30%.
- Subcooler is cold. Note the subcooler need not have liquid during cool down of the cavity cryomodules.

Summary of Cooldown Sequence

- Thermal shields cool down 2 days ahead of 4.5K cool down of either the SRF GUN or 5-CELL or both
- Main liquid helium supply line cool down using 5K circuits of either the SRF GUN or 5-CELL
- Start Kinney vacuum skid
- Cool down of the SRF GUN or 5-CELL or both

6.2.8.1 Cool down of SRF Gun and 5-cell Cavity Cryostat Cryostat LN2 Thermal Shields

The thermal shields of the SRF GUN and 5-Celll cryostat can started several days ahead

of the cool down. If only the 5-CELL or SRFGUN needs to be cold, cool down only the corresponding shield.

5-cell thermal shield

Set the High limit on the control valve PID loop controller to 30%.
Activate the automatic valve **N3302A** to control on its temperature control loop.
The temperature setpoint can be initially to 250K to allow the operator test the PID loop working. The setpoint can be adjusted down as the cool down proceeds.
Once a temperature of 90K has been reached, the setpoint can be set at 90K.

SRF GUN thermal shield

Set the High limit on the control valve PID loop controller to 30%.
Activate the automatic valve **N3303A** to control on its temperature control loop.
The temperature setpoint can be initially to 250K to allow the operator test the PID loop working. The setpoint can be adjusted down as the cooldown proceeds.
Once a temperature of 90K has been reached, the setpoint can be set at 90K.

6.2.8.2 6.2.8.2 Valve lineup before cooldown of SRF GUN Cryostat / Valvebox or 5-CELL Cryostat / Valvebox

Valve line up before starting cooldown of SRF GUN/ VALVEBOX

Tag	Location P&ID	Description	Location	Position	Check
H1405A	010604041	Top fill valve	Top of SRFGUN cryostat	CLOSED	
H3342A	010604071	Vapor return control valve to 20 Torr Header from SRF Gun boil-off	On SRF GUN VALVEBOX	OPEN	
H1404A	010604041	Bottom fill valve	Top of SRFGUN cryostat	CLOSED	

Valve line up before starting cooldown of the 5-CELL cryostat / valvebox

Tag	Location P&ID	Description	Location	Position	Check
H3353A	010604071	Top fill valve	Top of 5-cell valvebox	CLOSE	
H3343A	010604071	Vapor return control valve to 20 Torr Header from SRF Gun boil-off	Top of 5-cell valvebox	OPEN manual 100%	
H3354A	010604071	Actuated control valve, Liquid helium supply to bottom fill 5 cell SRF cavity	On 5 cell VALVEBOX	CLOSE	
H10896A	010604071	20Torr Coldvapor Return valve for 5 cell	On transfer lines, west, near 5-cell cryostat	CLOSE	
H10922A	010604071	20 Torr Coldvapor return valve for 5 cell	On transfer lines, west, near 5-cell cryostat	CLOSE	

Return valves to 10 inch header to Kinney pumping system

H3324A	010604071	Actuated Helium Control Valve, Return vapor from ERL cryomodules to 20 Torr helium vacuum header	On transfer line coming from ERL VJR	OPEN	

6.2.8.3 Cooldown of the main liquid helium line to the SRF cryomodules

Cooldown of the main liquid supply line can be done using the 5K circuits on either the SRFGUN cryostat or 5-CELL cryostat depending on which one will be used.

Open the 5K circuits manifold return valve, **H10947M**, to the compressor low pressure return line.
Verify the valve lineup of the helium supply from the plant to the subcooler to the distribution system.

Tag	Location P&ID	Description	Location	Position	Check
H3332A	010604071	Actuated control valve. Controls 4 atm Supply helium from plant to subcooler coils, to cryomodules	On transfer line behind distribution valvebox PHPK	CLOSED	
H9909A	010604048	Actuated Cross -over valve (V343)from HP JT loop to BC-5 /H9911A	Top plate front, left	OPEN	
H3329A	010604071	Actuated valve, isolates Subcooler subcooled supply to ERL cryomodules.	On distribution valvebox PHPK	OPEN	
H10947M	010604071	Isolation valve for helium shield and lead flows return from manifold to compressor LP return line	On manifold end for MKS mass flow controllers	OPEN	

If the SRFGun to be cool down then proceed with cooldown of the main liquid helium supply line using the SRFGun 5K circuits.

5K Circuits of SRF GUN

Tag	Location P&ID	Description	Location	Position	Check
H3540E	010604071	Thermal mass flowcontroller valve, actuated. SRFGun End Flange 2	On manifold for MKS mass flow controllers	Setpoint to 0.02 g/s	
H3541E	010604071	Thermal mass flowcontroller valve, actuated. SRFGun End Flange 1	On manifold for MKS mass flow controllers	Setpoint to 0.02 g/s	
H3542E	010604071	Thermal mass flowcontroller valve, actuated. SRFGun FPC-2	On manifold for MKS mass flow controllers	Setpoint to 0.02 g/s	
H3543E	010604071	Thermal mass flowcontroller valve, actuated. SRFGun FPC-1	On manifold for MKS mass flow controllers	Setpoint to 0.02 g/s	
H3544E	010604071	Thermal mass flowcontroller valve, actuated. SRFGun solenoid	On manifold for MKS mass flow controllers	Setpoint to 0.02 g/s	

5K Circuits 5-CELL Cryostat

Tag	Location P&ID	Description	Location	Position	Check
H3536E	010604071	Thermal mass flowcontroller valve, actuated. 5-cell cavity 5K circuit FPC coupler	On manifold for MKS mass flow controllers	Setpoint to 0.02 g/s	
H3537E	010604071	Thermal mass flowcontroller valve, actuated. 5-cell cavity 5K circuit End Flange, FPC side	On manifold for MKS mass flow controllers	Setpoint to 0.02 g/s	
H3538E	010604071	Thermal mass flowcontroller valve, actuated. 5-cell cavity 5K circuit End Flange, Tuner side	On manifold for MKS mass flow controllers	Setpoint to 0.02 g/s	
H3539E	010604071	Thermal mass flowcontroller valve, actuated. 5-cell cavity 5K circuit Tuner	On manifold for MKS mass flow controllers	Setpoint to 0.02 g/s	

Set the High limit for the valve position for pressure control valve **H3332A**, to 30%.
Set the setpoint to 2 atm for the pressure control setpoint for this valve.
Put the valve in auto and cooldown will start.

6.2.8.4 Cooldown of the cavities and helium volumes

Cryoplant adjustment

To get some capacity to allow the Sullair compressor to pump back the balance of the flow that the plant cannot liquefy, requires the 1660 plant to be turned down somewhat.
To handle at least 10 g/s of flow from the Kinney skid, the 1660 plant has to be turned down until the bypass valve on the gas management is about 45% open (equal percentage plug).

Drop the speed on the expander setpoint gradually to allow the plant JT valve to turndown with the expanders.

Once bypass valve **H3301A** is at about 45% open, the system is ready to accept flow from the Kinney pump.

Kinney pump startup

It is better to have the Kinney vacuum pump running, on just the liquid ring during cooldown of the cryostats, because relief settings for the cavities are low and this will give the operator more margin for pressure swings.

- Setup the Kinney pumps skid for operation per OPM 18.7.2.
- Line up the discharge of the Kinney to the Sullair compressor per table 6.2.8.4
- Set the Booster cut-in pressure to 2 Torr, to prevent the booster from cutting in while the pumpdown occurs.
- Set the Kinney skid bypass setpoint to 50 Torr
- Start the Kinney pumping skid with only the Liquid rings running and pumpdown skid volume.
- Crack open control valve **H10944A** to 20%.
- This will start the pumpdown of the header and cavity helium volumes using just the liquid rings
- Adjust the **H10944A** such that the upstream pressure stays at around 2 psia
- Once the header and cavity volume are pumped down to 30 Torr, the Kinney will be pumping on its own bypass at 30 Torr
- Leave the valve position of **H10944A** at its current position
- Proceed to the next sections to commence cooldown.
- Once the system has completed the initial pumpdown, the flowmeter can be valved in by closing valve **H3402M**.

Table 6.2.8.4

Tag	P&ID Number	Description	Location	POSITION	Check
H3402M	010604015	Bypass valve, 3" around venturi meter FT4009H, to 3 inch header back to compressor suction	On piping near wall	OPEN	
H3403M	010604015	Isolation dump valve to atmosphere	On piping near wall	CLOSED	
H3404M	010604015	Isolation valve between Kinney pump and Sullair suction return line	On piping near wall	OPEN	

Cooldown of the cavities cryomodules can begin when the main helium supply line has been cooled down below 10K.

6.2.8.5 Cooldown of 5-cell Cavity Cryostat and valvebox

After cooldown of the liquid helium supply line and startup of the Kinney skid.

Open the bottom fill valve on the 5-CELL, **H3354A,** to **15%.**

Temperature sensor **TE2026H** should starting dropping.

Set the setpoint for the 5K circuit mass flow controllers to the following:

5K Circuits 5-CELL Cryostat

Tag	Location P&ID	Description	Location	Position	Check
H3536E	010604071	Thermal mass flowcontroller valve, actuated. 5-cell cavity 5K circuit FPC coupler	On manifold for MKS mass flow controllers	0.05 g/s setpoint	
H3537E	010604071	Thermal mass flowcontroller valve, actuated. 5-cell cavity 5K circuit End Flange, FPC side	On manifold for MKS mass flow controllers	0.05 g/s Setpoint	
H3538E	010604071	Thermal mass flowcontroller valve, actuated. 5-cell cavity 5K circuit End Flange, Tuner side	On manifold for MKS mass flow controllers	0.05 g/s Setpoint	
H3539E	010604071	Thermal mass flowcontroller valve, actuated. 5-cell cavity 5K circuit Tuner	On manifold for MKS mass flow controllers	0.05 g/s setpoint	

Trend the temperatures to observe the cooldown rate. A rate of >50K/hr is desired to transition through the Q-disease region of 150K -70 K.

It is preferred to cool down one cavity at a time to make it more manageable.

Once the temperature is below 20K the top fill valve can be opened 15%.

Once the temperature has reached 15K, the liquid level sensors can be powered up.

Power up level sensors **LE400 A/B**

Once the temperature has reached the corresponding saturation pressure of 2 psia of 2.7K:

Open the bottom fill valve gradually more, until the Kinney flowmeter reads 5 g/s

Liquid will start accumulating.

Put the liquid level control valve into AUTO mode at a setpoint of 80%.

Set the cut-in pressure of the Booster to 30 Torr.

Throttle the vapor return valve to **H3343A** to allow the header to pumpdown until the booster cuts-in.

The pumpdown to below the lamba point 2.2K, can commence.

Set the back pressure control valve **H3343A** to auto mode with a setpoint of 22 Torr.

6.2.8.6 Cool down of SRF GUN Cryostat and valve box

After cooldown of the liquid helium supply line and startup of the Kinney skid:

Open the bottom fill valve on the SRF GUN, **H1404A,** to **15%.**

Temperature sensor **TE410H** and **TE409H** should starting dropping.

Set the setpoint for the 5K circuit mass flow controllers to the following:

5K Circuits of SRF GUN

Tag	Location P&ID	Description	Location	Position	Check
H3540E	010604071	Thermal mass flowcontroller valve, actuated. SRFGun End Flange 2	On manifold for MKS mass flow controllers	Setpoint to 0.05 g/s	
H3541E	010604071	Thermal mass flowcontroller valve, actuated. SRFGun End Flange 1	On manifold for MKS mass flow controllers	Setpoint to 0.05 g/s	
H3542E	010604071	Thermal mass flowcontroller valve, actuated. SRFGun FPC-2	On manifold for MKS mass flow controllers	Setpoint to 0.05 g/s	
H3543E	010604071	Thermal mass flowcontroller valve, actuated. SRFGun FPC-1	On manifold for MKS mass flow controllers	Setpoint to 0.05 g/s	
H3544E	010604071	Thermal mass flowcontroller valve, actuated. SRFGun solenoid	On manifold for MKS mass flow controllers	Setpoint to 0.02 g/s	

Trend the temperatures to observe the cooldown rate. A rate of >50K/hr is desired to transition through the Q-disease region of 150K -70 K.

Once the temperature is below 20K the top fill valve can be opened 15%.

Once the temperature has reached 15K, the liquid level sensors can be powered up.

Power up level sensors **LE400 A/B**

Once the temperature has reached the corresponding saturation pressure of 2 psia of 2.7K:

Open the bottom fill valve gradually more, until the Kinney flowmeter reads 5 g/s

Liquid will start accumulating.

Put the liquid level control valve into AUTO mode at a setpoint of 80%.

Set the cut-in pressure of the Booster to 30 Torr.

Throttle the vapor return valve to **H3324A** to allow the header to pumpdown until the booster cuts-in.

The pumpdown to below the lamba point 2.2K, can commence.

Set the back pressure control valve **H3324A** to auto mode with a setpoint of 22 Torr.

6.2.9 Cold cathode cool down

Once the cathode is inserted into the load lock chamber, (after bakeouot of the load lock) before opening the UHV gate valve to the GUN cavity, the cathode can be cooled down to LN2 temperatures ONLY AFTER THE CAVITY IS COLD to prevent poisoning of the cathode surface.

UnLOTO valve **H3301M** and **H3307A**

Tag	P&ID Number	Description	Location	POSITION	Check
N3301M	010604071	Manual isolation valve, LN2 cathode cooling supply	SRFGUN Valvebox		
N3304M	010604088	Manual isolation valve, LN2 purge	SRF GUN Valvebox EDEN	CLOSE	
N3306M	010604088	Manual isolation valve, GN2 purge	SRF GUN Valvebox EDEN	CLOSE	
N3307A	010604088	Actuated Control valve, LN2 phase seperator fill	SRF GUN Valvebox EDEN	CLOSE Control	
N3310A	010604088	Actuated Control valve, LN2 pressure control	SRF GUN Valvebox EDEN	AUTO @ 5 psig	
N3345M	010604088	Manual isolation valve, cathode supply	On transfer line to cathode cart	OPEN	

Cooldown can be controlled using control valve **N3307A**.

Set a position of 10% and watch the temperature drop.

Activate the vent heater HTR-423 and set the setpoint to 100K

Once the temperature **TT3301N** has reached 90K:

Set Pressure control Loop **N3310A** into auto mode.

Set level control Loop **N3307A** into auto mode.

==========

6.2.10 40 inch Vertical Test Dewar Operation: Cooldown and Operation

After the test article has been inserted and dewar prepared according to the preparation procedures, the system can be cooled down.

Because the dewar can hold a lot of inventory, the ERL system is not expected to operate in conjunction with this large vertical test dewar.

A full storage dewar, about 3000 liters is required to start the VTF test.

Cooldown of the test dewar will take at least 800 Liters.

2000 liters will be left to fill the cold volume.

Verify insulating vacuum level for the test dewar of less than $5x10^{-5}$ Torr when warm.

6.2.10.1 Valve line up check prior to cooldown

Remove LOTO on the following valves but verify they are close when LOTO is removed. Verify air is on for the fail open valves.

Tag	Location P&ID	Description	Location	Position	Check
H3335M	010604071	Manual Purge valve, on liquid supply line from LHE dewar to test dewar	On distribution valvebox PHPK	CLOSED	
H3321M	010604071	Manual Purge valve, on Vapor return line from 40 inch test dewar	On distribution valvebox PHPK	CLOSED	
H3328A	010604071	Actuated valve with hand wheel, isolates Subcooler subcooled supply to Test dewar.	On distribution valvebox PHPK	REMOVE LOTO CLOSED	
H3327A	010604071	Actuated control valve from Liquid helium draw from 1000 gal storage dewar to VTD supply	On distribution valvebox PHPK	REMOVE LOTO CLOSED	
H3320A	010604071	Low pressure return from 40” Vertical Test Dewar	Distribution Valve box	REMOVE LOTO CLOSE. This is a fail open valve, verify air is on	
H3322A	010604071	Liquid supply isolation to 40” VTD	Distribution Valve box	REMOVE LOTO CLOSE	
H3512A	CA6010001	Liquid fill valve into 40” VTD	40” Vertical Test Dewar	REMOVE LOTO CLOSE	
H3513A	CA6010001	Cooldown supply bottom valve into 40” VTD	40” Vertical Test Dewar	REMOVE LOTO CLOSE	

H3522M	CA6010001	Warm helium supply purge manual metering valve	40” Vertical Test Dewar	REMOVE LOTO CLOSE	
H3521A	CA6010001	Warm helium supply purge solenoid isolation valve	40” Vertical Test Dewar	CLOSED	
H3514M	CA6010001	Manual pump out port, for helium volume, isolation valve	40” Vertical Test Dewar	CLOSED	
N3315A	010604071	Liquid Nitrogen supply control valve thermal shield	Distribution VJR line to VTD	REMOVE LOTO CLOSE	
N3343M	CA6010001	External supply from bottle: manual metering valve, Nitrogen or helium or dry air	40” Vertical Test Dewar	REMOVE LOTO CLOSE	
N3342A	CA6010001	External supply from bottle solenoid isolation valve	40” Vertical Test Dewar	CLOSED	

ERL SIDE VALVE LINEUP

If the ERL cavities are cold and drifting, and cold vapor is returning from the cavities via H3324A, this can be left open to take the vapor back to the Kinney pump.

6.2.10.2 Shield and heat intercepts cooling

The shield cool down can be started slowly by opening Nitrogen supply valve **N3315A** to 15%.

Monitor **TT3316N**, **TT3315N** by trending the cool down rate.

The rate should be no more than 40K/hr.

The discharge of the cold vent is piped to outside the building corner of NEBA building with corner of pump/compressor room.

Because the intercept is on the helium dewar, the helium vessel will start to cooldown once the shield has started.

6.2.10.3 Vertical Test Dewar cooldown

The reliefs have been engineered with low setpoints because of the low design pressure of the cavities being tested.

It is preferred to cooldown the dewar/test article with the Kinney vacuum pumps running, with just the liquid rings, when possible.
This will allow you some operation margin for transients during cooldown.
Besides running the vacuum skid, the cryoplant needs to be turned somewhat to get compressor capacity to handle the flow from the Kinney pump.

Cryoplant adjustment

To get some capacity to allow the Sullair compressor to pump back the balance of the flow that the plant cannot liquefy, requires the 1660 plant to be turned down somewhat.

To handle at least 10 g/s of flow from the Kinney skid, the 1660 plant has to be turned down until the bypass valve on the gas management is about 45% open (equal percentage plug).

Drop the speed on the expander setpoint gradually to allow the plant JT valve to turndown with the expanders.

Once bypass valve **H3301A** is at about 45% open, the system is ready to accept flow from the Kinney pump.

Kinney pump startup

It is better to have the Kinney vacuum pump running, on just the liquid ring during cooldown of the cryostats, because relief settings for the cavities are low and this will give the operator more margin for pressure swings.

- Setup the Kinney pumps skid for operation per OPM 18.7.2.
- Line up the discharge of the Kinney to the Sullair compressor per table 6.2.10.3
- Set the Booster cut-in pressure to 2 Torr, to prevent the booster from cutting in while the pumpdown occurs.
- Set the Kinney skid bypass setpoint to 50 Torr
- Start the Kinney pumping skid with only the Liquid rings running and pumpdown skid volume.
- Crack open control valve **H10944A** to 20%.
- This will start the pumpdown of the header and cavity helium volumes using just the liquid rings
- Adjust the **H10944A** such that the upstream pressure stays at around 2 psia
- Once the header and cavity volume are pumped down to 30 Torr, the Kinney will be pumping on its own bypass at 30 Torr
- Leave the valve position of **H10944A** at its current position
- Proceed to the next sections to commence cooldown.
- Once the system has completed the initial pumpdown, the flowmeter can be valved in by closing valve **H3402M**.

Table 6.2.10.3 Kinney Pump Skid valve lineup

Tag	P&ID Number	Description	Location	POSITION	Check
H3402M	010604015	Bypass valve, 3" around venturi meter FT4009H, to 3 inch header back to compressor suction	On piping near wall	OPEN	
H3403M	010604015	Isolation dump valve to atmosphere	On piping near wall	CLOSED	
H3404M	010604015	Isolation valve between Kinney pump and Sullair suction return line	On piping near wall	OPEN	

Pumpdown of the test dewar volume from 1 atmosphere can be started by opening valve **H3320A**. To not overload the Sullair, open H3320A 15%.

The volume will pump down slowly.

Cooldown start

Open **H3513A** to 100%.

The cooldown with liquid helium will start by using low pressure helium from the dewar via control valve **H3327A**.

Open **H3327A** to 20% to start cooldown.

Monitor temperatures on the test article to determine the desired cooldown gradient and rates

From 293K to 180K: Rate 20K/hr. Stress gradients
From 180K to 60K: Rate 50K/hr. Q-disease region

With the Kinney pump running, the pressure can be allowed to rise, as the cooldown proceed. There is no need to keep the dewar pressure below 50Torr during cooldown and fill.

Filling
When the dewar is cold and liquid has started to accumulate, or the temperature has dropped below 4.5K, the top fill valve can be opened to recovery against the cold vapor.

Open valve **H3512A** 100%.

Withdrawal is still controlled by valve **H3327A**.

Open dewar withdrawal valve **H3327A** more, until back pressure control valve H3331A has reached its minimum position. The H3331A cannot be closed completely, since the JT loop needs the recycle flow to function properly. As the withdrawal rate increases during the transfer, the pressure will drop, and the transfer rate will level off to a maximum rate.

6.2.10.4 4.3K Operation

For a test at 4.3K, the corresponding saturation pressure is 1.2 bar or 2.7 psig, which is as high one could go before the relief starts to leak. The relief on the dewar is a pilot operated relief, snap action, set to go at 5 psig exactly.

Allow the pressure to build to 1.2 bar or 2.7 psig, by closing down on H3320A.

The Kinney vacuum pump can only be turned off, and test dewar return to the cold end of 1660 plant only if the 1660 plant can be turned down, to allow the pressure drop through the 1600 to be low enough to operate this low in pressure, otherwise, the Kinney vacuum skid remains on to provide the differential to operate the test at 4.3K or lower.

6.2.10.5 2K Pumpdown and Operation

For testing below the lambda point, below 2.2 K, the operating pressure has to drop below 30 Torr. During the cooldown and fill the pressure can be gradually lowered until the desired pressure has been reached. Pumpdown and fill can happen simultaneously, or the dewar can be filled first, and then pumped down.

6.3 Shutdown / Warmup of Equipment

6.3.1 Subcooler warm-up and shutdown

If shutdown of the system is anticipated the fill valve to the subcooler should be shutdown first and the liquid level to allowed to be lowered.

Close valve **H3330A**

Tag	P&ID Number	Description	Location	POSITION	Check
H3330A	010604071	Subcooler bath fill valve. Actuated control valve from Liquid helium draw from 1000 gal storage dewar to subcooler fill line	On distribution valvebox PHPK	CLOSED	

Once most of the liquid has been boiled off, a small purge of warm gas can be introduced via **H3554M,** warm helium supply from compressor**,** to the purge valve on the distribution box **H3333M.**

Verify that valve **H3327A** with handwheel is closed, and LOTO if VTF is not in use.
Close dewar bayonet valve **H3493M**.
Open the subcooler fill valve **H3330A** to 30%.
Open **H3554M**.
Use **H3333M** to throttle warm gas flow into the subcooler.

Tag	P&ID Number	Description	Location	POSITION	Check
H3327A	010604071	Actuated control valve from Liquid helium draw from 1000 gal storage dewar	On distribution valvebox PHPK	CLOSED LOTO [VTF]	
H3493M	010604034	Manual Isolation valve, on Dewar 1/2" T line, bottom liquid draw Lhe from dewar	Top of dewar, bayonet line	CLOSED	
H3330A	010604071	Actuated control valve from Liquid helium draw from 1000 gal storage dewar to subcooler fillvalve	On distribution valvebox PHPK	OPEN to 30%	
H3554M	010604071	Manual valve. Tap of 2” helium warm supply line from compressor to VTD	On 2” piping above subcooler	Throttle OPEN	
H3333M	010604071	Manual Purge valve, on liquid draw line from LHE dewar to valves H3327A and H3330A	On distribution valvebox PHPK	Throttle for purge	

Close both warm supply valves when warm up has been completed.

6.3.2 VTD Warmup and shutdown

Turn on boil-off heater to boil off remaining liquid.

Return path to Kinney pump / Sullair compressor to gas storage

Return to 1660 plant if liquefying to Liquid storage dewar

Close LN2 supply to shield/intercept.

Open solenoid **H3521A**.

Metering valve **H3522M** is preset.

6.3.3 Cold cathode cooling loop warm-up and shutdown

Close Valve **N3301M** LN2 supply

If warmup is required of the cathode, connect a N2 bottle source to valve **N3306M** and purge the separator, the cold cathode, and the vent line.

Open fill valve **N3307A**. Put in manual mode and set to 100%. This will depressurize any liquid into the separator.

N3345M should still be open.

The discharge will vent the normal path to outside of building.

The heater HTR-423 can be turned off, if the system will be offline for a while. The loop controller is located in the rack.

Tag	P&ID Number	Description	Location	POSITION	Check
N3301M	010604071	Manual isolation valve, LN2 cathode cooling supply	SRFGUN Valvebox	CLOSE	
N3304M	010604088	Manual isolation valve, purge	SRF GUN Valvebox EDEN	CLOSE	
N3306M	010604088	Manual isolation valve, GN2 purge	SRF GUN Valvebox EDEN	CLOSE	
N3307A	010604088	Actuated Control valve, LN2 phase seperator fill	SRF GUN Valvebox EDEN	OPEN	
N3310A	010604088	Actuated Control valve, LN2 pressure control	SRF GUN Valvebox EDEN	CLOSE	
N3345M	010604088	Manual isolation valve, cathode supply	On transfer line to cathode cart	OPEN	
HTR-423	010604088	Heater for LN2 vaporization	SRF GUN Valvebox EDEN	OFF	

6.3.4 SRF Gun Cryostat/valvebox warm-up and shutdown

The following is assumed to be the case, else go to emergency procedure section.

Sullair compressor still running.
1660 plant still running.
Kinney pumps still running.

6.3.4.1 Empty liquid from SRF GUN cavity cryostat

Close valve **H1405A**. Set the level control loop setpoint to 0%. Put in manual and 0%. The vapor return pressure control valve **H3342A** can be left wide open.

Boil-off the remaining liquid helium by turning on the 50 W heater HTR-400.

The boil-off rate will be only 3 g/s with a 50 W heat load plus heat leak with the static boil-off of the 5-CELL the Kinney pump can handle this flowrate easily.

If the cavity is to remain cold until the system is ready for testing again, proceed to Kinney vacuum skid shutdown or 5-CELL warmup.

Tag	Location P&ID	Description	Location	Position	Check
H1405A	010604041	Top fill valve	Top of cryostat	CLOSED	
H3342A	010604071	Vapor return control valve to 20 Torr Header from SRF Gun boil-off	On SRF GUN VALVEBOX	OPEN	

6.3.4.2 Warm up of the SRF GUN to room temperature

If the cavity is to be warmed to room temperature, warm clean helium purge can be introduced via **H3554M** to the purge valve on the distribution box **H3339M**. Once all liquid has been evaporated, the bottom fill valve can be opened to start the warm flow from the main supply line. Before the warmup of the SRF GUN can be started using warm gas, the 5-CELL cryostat needs to be emptied from liquid helium also, even if the 5-CELL will remain cold and testing will resume on the 5-CELL.

<u>Isolate and empty the 5-CELL cryostat</u>

Close fill valve **H3353A** and **H3354A** should be closed already.

Tag	Location P&ID	Description	Location	Position	Check
H3353A	010604071	Actuated control valve, Liquid helium supply top fill reservoir volume for 5 CELL cavity	On 5 cell VALVEBOX	CLOSED	
H3354A	010604071	Actuated control valve, Liquid helium supply to bottom fill 5 CELL cavity	On 5 cell VALVEBOX	CLOSED	

Depressurize the liquid supply header by closing valves:
H9909A on the 1660 plant, which supplies high pressure to the system first.
(the 1660 can continue running normally by liquefying into the 1000 Gal dewar)

Next close pressure control valve **H3332A**.

Open the actuated isolation valve **H10975A** and manual valve **H10982M** for the Kinney bypass check valve line to allow gas to bypass the Kinney pump, once the pressure rises above 1.1 atm.

Tag	Location P&ID	Description	Location	Position	Check
H9909A	010604048	Actuated Cross -over valve (V343)from HP JT loop to BC-5 /H9911A	Top plate front, left	CLOSED	
H3332A	010604071	Actuated control valve. Controls 4 atm Supply helium from plant to subcooler coils, to cryomodules	On transfer line behind distribution valvebox PHPK	CLOSED	
H1405A	010604041	Top fill valve	Top of SRF-GUN cryostat	CLOSED	
H10975A	010604015	Vacuum bypass automatic valve for vacuum pump	On piping above Kinney skid	OPEN	
H10982M	010604015	Vacuum bypass isolation valve for vacuum pump	On piping above Kinney skid	OPEN	

The 5K intercept circuits get the same gas from the main helium supply line.
The mass flow controllers will pass less and less gas as the supply temperature gets warmer. The valve can be opened to 100% once warm gas is introduced. Change the setpoints to 0.3 g/s.

Tag	Location P&ID	Description	Location	Position	Check
H3540E	010604071	Thermal mass flowcontroller valve, actuated. SRFGun End Flange 2	On manifold for MKS mass flow controllers	Setpoint to 0.3 g/s	
H3541E	010604071	Thermal mass flowcontroller valve, actuated. SRFGun End Flange 1	On manifold for MKS mass flow controllers	Setpoint to 0.3 g/s	
H3542E	010604071	Thermal mass flowcontroller valve, actuated. SRFGun FPC-2	On manifold for MKS mass flow controllers	Setpoint to 0.3 g/s	
H3543E	010604071	Thermal mass flowcontroller valve, actuated. SRFGun FPC-1	On manifold for MKS mass flow controllers	Setpoint to 0.3 g/s	
H3544E	010604071	Thermal mass flowcontroller valve, actuated. SRFGun solenoid	On manifold for MKS mass flow controllers	Setpoint to 0.3 g/s	

Proceed until the cavity has reached room temperature.

6.3.5 5-CELL Cryostat/valvebox warm-up and shutdown

The following is assumed to be the case, else go to emergency procedure section.

Sullair compressor still running.
1660 plant still running.
Kinney pumps should still be running.

The liquid will be evaporated by using the heater in the helium bath, and the boil-off returns to the Kinney pump via the ambient vaporizer. The Kinney discharges the flow to the Sullair compressor and the pump back valve will send the extra inventory to gas storage.

6.3.5.1 Empty liquid from 5-CELL cavity cryostat

Close valve **H3353A**. Set the level control loop setpoint to 0%. Put in manual and 0%.
The vapor return pressure control valve **H3343A** can be left wide open.
Bottom fill valve **H3354A** should be closed already

Boil-off the remaining liquid helium by turning on the 50 W heater HTR-407 on the 5-CELL helium vessel.

The boil-off rate will be approximately 3 g/s with a 50 W heat load plus heat leak with the static boil-off of the SRF Gun, the Kinney pump can handle this flowrate easily.

Once all the liquid has been evaporated the heater can be left on at 30% duty to transfer heat to the helium vapor and warm up the cavity slowly.

Tag	Location P&ID	Description	Location	Position	Check
H3353A	010604071	Top fill valve	Top of 5-cell valvebox	CLOSE	
H3343A	010604071	Vapor return control valve to 20 Torr Header from SRF Gun boil-off	Top of 5-cell valvebox	OPEN manual 100%	
H3354A	010604071	Actuated control valve, Liquid helium supply to bottom fill 5 cell SRF cavity	On 5 cell VALVEBOX	CLOSE	

6.3.5.2 Warm up of the 5-CELL to room temperature

If the cavity is to be warmed to room temperature, warm clean helium purge can be introduced via **H3554M** to the purge valve on the distribution box **H3339M**. Once all liquid has been evaporated, the bottom fill valve can be opened to start the warm flow from the main supply line. Before the warmup of the 5-CELL can be started using warm gas, the SRF-GUN cryostat needs to be emptied from liquid helium also; even if the SRF-GUN will remain cold and testing will resume on the SRF-GUN.

Isolate and empty the SRF-GUN cryostat

Close fill valve H1405A and H1404A should be closed already.

Tag	Location P&ID	Description	Location	Position	Check
H1405A	010604041	Top fill valve	Top of SRF-GUN cryostat	CLOSED	
H3342A	010604071	Vapor return control valve to 20 Torr Header from SRF Gun boil-off	On SRF-GUN VALVEBOX	OPEN 100%	

Liquid Helium Supply Line

Depressurize the liquid supply header by closing valves:
Close **H9909A** on the 1660 plant, which supplies high pressure helium to the distribution system.
(the 1660 can continue running normally by liquefying into the 1000 Gal dewar)

Next close pressure control valve **H3332A**.

Open the actuated isolation valve **H10975A** and manual valve **H10982M** for the Kinney bypass check valve line to allow gas to bypass the Kinney pump, once the pressure rises above 1.1 atm.

Tag	Location P&ID	Description	Location	Position	Check
H9909A	010604048	Actuated Cross -over valve (V343)from HP JT loop to BC-5 /H9911A	Top plate front, left	CLOSED	
H3332A	010604071	Actuated control valve. Controls 4 atm Supply helium from plant to subcooler coils, to cryomodules	On transfer line behind distribution valvebox PHPK	CLOSED	
H1405A	010604041	Top fill valve	Top of cryostat	CLOSED	

The 5K intercept circuits get the same gas from the main helium supply line.
The mass flow controllers will pass less and less gas as the supply temperature gets warmer. The valve can be opened to 100% once warm gas is introduced. Change the setpoints to 0.3 g/s.

Tag	Location P&ID	Description	Location	Position	Check
H3536E	010604071	Thermal mass flowcontroller valve, actuated. 5-cell cavity 5K circuit FPC coupler	On manifold for MKS mass flow controllers		
H3537E	010604071	Thermal mass flowcontroller valve, actuated. 5-cell cavity 5K circuit End Flange, FPC side	On manifold for MKS mass flow controllers		

H3538E	010604071	Thermal mass flowcontroller valve, actuated. 5-cell cavity 5K circuit End Flange, Tuner side	On manifold for MKS mass flow controllers		
H3539E	010604071	Thermal mass flowcontroller valve, actuated. 5-cell cavity 5K circuit Tuner	On manifold for MKS mass flow controllers		

Proceed until the cavity is at the desired temperature.

6.3.6 Kinney vacuum skid shutdown

When warm up of the cryostat(s) has (have) been completed, the Kinney vacuum skid can be shutdown.

Open the actuated isolation valve **H10975A** and manual valve **H10982M** for the Kinney bypass check valve line to allow gas to bypass the Kinney pump, once the pressure rises above 1.1 atm.

Close the 10 inch butterfly inlet valve **H10944A**.

Close valve **H10968M.**

Hit the “AUTO STOP” Button on the Kinney vacuum pumping system screen

6.3.7 1660 Plant shutdown

1. Ensure that the **H9903A** (V323) control switch is in the “Auto” Position

2. Press the ENGINE BRAKE button to, the VFD will setpoint will go to 0 rpm. Solenoid valve **H9903A** (V323) will close. The engines will rotate until heat exchanger gas pressure has dropped to approximately 80 psig. Allow the engines to stop.

3. Close the engine inlet isolation valves
   H9853M (V315) Set A
   H9857M (V317) Set A
   H9854M (V325) Set B
   H9858M (V327) Set B

4. Install the flywheel locking bars.

6.3.8 1000 Gallon Liquid helium dewar warmup and shutdown

If the 1000 gallon Liquid helium storage dewar needs to be emptied and warmed up:

6.3.8.1 Empty the liquid helium dewar

In order to boil-off a large amount of liquid using the boil-off heater, the flowrate returning would be too large to warmup to room temperature with just the return piping.

To warm the gas flow, the cold vapor needs to be returned via the ambient vaporizer.
To allow gas to the ambient vaporizer, the cavity cryomodules needs to be isolated.

Isolate the cavity cryomodules

Close the following vapor return valves for the cavity cryomodules

Tag	Location P&ID	Description	Location	Position	Check
H10896A	010604071	20Torr Coldvapor Return valve for 5 cell	On transfer lines, west, near 5-cell cryostat	CLOSE	
H10922A	010604071	20 Torr Coldvapor return valve for 5 cell	On transfer lines, west, near 5-cell cryostat	CLOSE	
H3342A	010604071	Vapor return control valve to 20 Torr Header from SRF Gun boil-off	On SRF GUN VALVEBOX	CLOSE	
H3343A	010604071	Vapor return control valve to 20 Torr Header from 5 cell cavity boil-off	On 5 cell VALVEBOX	CLOSE	

Valve line up to send helium boil-off from 1000 gal liquid helium dewar to 20 Torr ambient vaporizer

Boil-off from the dewar will return via **H3331A**, to BC-2 on the 1660 plant, via valve **H9917A** to **H9919A** out bayonet BC-3 to **H3323A** into the 10 header via **H3324A** and onto the ambient vaporizer, and to the pumproom

Tag	Location P&ID	Description	Location	Position	Check
H3331A	010604071	Actuated control valve. Vapor return from Liquid helium storage dewar	On transfer line behind distribution valvebox PHPK	OPEN	
H9917A	010604048	Actuated Cross-over valve (V350) between Return bayonet line BC-2 and Cooldown return bypass line low side	Top plate front	OPEN	
H9919A	010604048	Actuated Cross-over valve (V352) between Return bayonet line BC-3 and Cooldown return bypass line low side	Top plate front	OPEN	
H3323A	010604071	Actuated Helium Valve, Return vapor from ERL cryomodules TO 4.5K cryoplant	On distribution valvebox PHPK	OPEN	
H3324A	010604071	Actuated Helium Control Valve, Return vapor from ERL cryomodules to 20 Torr helium vacuum header	On transfer line coming from ERL VJR	OPEN	

H10975A	010604015	Vacuum bypass valve for vacuum pump	On piping above Kinney skid	OPEN	
H10982M	010604015	Vacuum bypass isolation valve for vacuum pump	On piping above Kinney skid	OPEN	
H10866C	010604015	Vacuum bypass check valve for vacuum pump	On piping above Kinney skid		
H10973M	010604015	System isolation downstream of venturi mass flow meters FI4010H,FI4009H through Kinney pump skid	On Kinney skid	OPEN	
H3404M	010604015	Isolation valve between Kinney pump and Sullair suction return line	On piping near wall	OPEN	

The heater in the dewar can be turned on to boil-off the remaining liquid.

Dial the heater setting, **JIC3301H** to about 50% level to get 100 W, about 5 g/s, of boil-off vapor.

The vapor will return to compressor suction via the ambient vaporizer, through flowmeter **FT4010H**

6.3.9 Sullair Compressor shutdown

After all the gas from the warmup has been pumped back into gas storage, the helium compressor can be shut down.

Hit the stop button on the Sullair control panel. The compressor will unload automatically before the compressor isshut.

6.3.10 LN2 System shutdown

If the system is not to be used for a while, the main supply from the LN2 dewar can be shut.

Close manual valve **N3334M** and LOTO this valve.

The keepfull will keep venting the gas being generated when there is no liquid present.

6.4 Emergency Procedures

The following procedures give instructions when a critical piece of equipment shuts down and interrupts operation somewhere in the system or when there is an unusual pressure event in the system.

6.4.1 ODH Alarms

When the ODH alarm sounds leave the building per ODH training. Review **C-A OPM 18.3.2** Response to Low Oxygen Alarm in Building 912 Accelerator R&D Area for this.

The ERL cryogenic system can be monitored and controlled from other computers in other control rooms.

The LN2 main supply header will automatically be isolated by the ODH system.

When you are at another control station, check the Helium tank pressure **PT3306H**.

If this is falling, rapidly, the isolation valve, outside building at the tank, **H3484M** can be closed.

Close valve H3329A that supplies flow to ERL cryomodules.
Close valve H3332A that supplies flow to subcooler / ERL cryomodules.
Close valve H3328A that supplies flow to large VTD.
Close valve H3327A that supplies flow to large VTD.

6.4.2 Equipment Emergencies

6.4.2.1 Sullair compressor high side over pressure

The main helium compressor is protected by an overpressure switch and relief valve.
In an overpressure occurs, and the overpressure switch fails, the relief will lift.
The compressor can be shutdown on the operator screen.
Or to shut the compressor down at MCC, go to the Sullair MCC located on the west wall in the NEEBA building and press the stop button.
Close the makeup valve **H3302A**.

6.4.2.2 1660 overspeed

On engine overspeed the inlet valve **H9903A** should close to stop helium supply to the coldbox.
If the engines do not spin down:

Close the valve at the charcoal adsorber bed exit, near the ambient vaporizer, valve **H3478M**.
Then go the 1660 skid, and shut manual valve **H9809M**, located at the rear left of the skid.

6.4.3 Overpressure of equipment

If any of the following alarms for over pressure come in:

6.4.3.1 PT1401H SCRF GUN helium bath pressure

Verify insulating vacuum is okay on the cryostat.
Verify vapor return valve **H3342A** is open and controlling.
Verify that fill valves **H1404A** and **H1405A** are closed.
Verify that crossover valve **H3324A**, to 10 inch header is open.
Verify that Kinney suction valve **H10944A** is open.

6.4.3.2 PT8454H 5-CELL helium bath pressure

Verify insulating vacuum is okay on the cryostat.
Verify vapor return valve **H3343A** is open and controlling.
Verify that fill valves **H3353A** and **H3354A** are closed.
Verify that crossover valve **H3324A**, to 10 inch header is open.
Verify that Kinney suction valve **H10944A** is open

6.4.3.3 PT3319H Sullair compressor discharge pressure.

Verify pumpback valve is controlling, if not verify whether the valve is getting air or is functioning.
If the discharge pressure is rising above 17 atm and not being controlled, shutdown the compressor skid from the computer, or stop button. Try to avoid the high pressure trip from activating, or relief valve from lifting.

6.4.3.4 PT3305N LN2 Storage dewar pressure

Check the level, and if the level is above 80%, proceed to the dewar to verify whether a delivery truck is overfilling the dewar.
Verify vacuum vessel insulation is okay. No sweating or cold spots.
If usage is low, verify that the economizer is venting. The economizer regulator is preset at 50 psig. The valve upstream may be closed.

6.4.3.5 PT 3320N phase separator pressure cold cathode loop

Verify Fill valve from LN2 supply main is closed or in control. If not, take action to fix the valve actuation.
Verify Pressure regulating valve **N3310A** is regulating or is open. If not, take action to fix the valve actuation.
Verify manual valve **N3345M** is open or not plugged.
If above 45 psig, verify relief valve **N3311R** is lifting to confirm high pressure condition.
Go to the valve box and verify insulating vacuum is good by checking the valve box vacuum vessel surface is not cold.

6.4.3.6 PT 3306H Helium Gas Storage Pressure

Check if any high pressure trailer is connected to the tank, and is filling the tank.
Verify dial gage located outside on the tank is reading close the pressure transmitter value.
If the pressure is above 250 psig, then relief valve should be lifting.
If the source is not from an external source then the compressor is the source of high pressure.
Shutdown Sullair compressor if the pressure keeps rising.

6.4.3.7 PT8464 Kinney pumping skid discharge pressure

On high Kinney discharge pressure
Verify Sullair compressor is loaded. The alarm should have come in on Sullair also.
Verify that the manual isolation valve **H3404M** between Kinney discharge and Sullair suction line is open. Blowdown the volume by opening the dump valve **H3403M** to atmosphere.
If the valve is closed, crack the valve **H3404M open** and close **H3403M.**
Open valve **H3404M** fully.

6.4.3.8 PT3313H Liquid Helium Storage Dewar Pressure

On high helium storage dewar pressure:

Verify insulating vacuum is okay on the cryostat.
Verify Control valve **H3331A** is open. If closed or not controlling, check air supply.
Verify **H9914A** on the cryoplant return is open.
Close **JT5** valve on 1660 plant to stop flow to dewar.
Verify Sullair compressor is running and suction pressure is below 1.1 atm.
If everything above checks out, the low pressure side of the heat exchanger may be plugged or the return line from from the dewar is plugged.

6.4.3.9 PT3300H Liquid Helium Subcooler Bath Pressure

If **PT3300H** pressure remains above 30 psi is an indication something serious has gone wrong.
Verify insulating vacuum is okay on the cryostat on Thermocouple gage **PT3301V**.
Check 1660 low side pressure.
Shut manual valve **H3486M**
Shut the liquid level fill valve **H3330A** and manual valve **H3493M**
Shut the subcooler tube side 3 atm control valve **H3332A**.
Shut manual valve **H3493M** if it appears that **H3330A** is not closing.
Shut vapor return **H3331A** from main liquid helium storage dewar.

6.4.3.10 PT3304H Liquid Helium Cryomodules Supply Header Pressure

Close control valve **H3332A**.
Check the setpoint value for the pressure control loop on **H3332A**
Close supply valve **H9911A** at 1660 plant to shut off flow to upstream side of control valve **H3332A**.
Check whether the relief valve **H3338R** has lifted.
Isolation valve, **H3329A**, for liquid supply to cryomodules can also be closed.
Verify insulating vacuum is okay on the VJR/distribution valvebox.

6.4.3.11 Oil leak of compressor or Kinney vacuum skid

If an oil leak / line break has occurred, the Sullair compressor will shutdown on low oil pressure. The spill tray will catch the oil leaked out.

If the oil leak is small, shut down the compressor at the control panel. If the oil is spraying around, the compressor can be shutdown at the MCC cabinet located along the alley way WEST wall of the ERL blockhouse.

If the Kinney vacuum pump has sufficient leaked oil, the skid will shutdown on low oil level in the oil separator tank. The catch tray around the base will contain the oil leak.
The e-stop can be pressed on the Kinney pump control cabinet or stopped from the control page.

6.4.3.12 Large gas cloud outside the nitrogen cold vent

If this is beyond the normal operation discharge, check the LN2 control valves to the end users:

SRF Gun shield control valve **N3303A**
5-CELL shield control valve **N3302A**
VTF shield control valve **N3315A**
Cold cathode cooling loop **N3307A**.
1660 plant LN2 precooler valve **N6100A**
If after closing all the above valves the discharge is excessively high, then the keepfulls on the main LN2 line may be stuck open.

Close the main isolation valve, **N3334M**, at the 11,000 Gal dewar if flowrate does not reduce.

7 Documentation

7.1 Record

The check off lines in the procedure are for place keeping only. The procedure is not to be initialed or signed, it is not a record.

7.2 Log

The shift supervisor shall document the completion of the procedure in the cryogenics control electronic log.

7.3 References

7.3.1 C-A-OPM 18.7.2, "ERL OPM Process Vacuum Pump".

8 Attachments

8.1 Attachment A - Valve Lineup Tables

ATTACHMENT A Valve Lineup Tables

A.1 Table 6.1.1. Helium Compressor skid valve line up

Tag	P&ID Number	Description	Location	POSITION	Check
H3501M	010604032	Manual dump /purge vent valve on compressor discharge side	On Sullair skid	CLOSE	
H3502M	010604032	Blowdown valve, manual valve, bulk oil separator on compressor skid	On Sullair skid	CLOSE	
H3505M	010604032	isolation valve, instrument	On Sullair skid	OPEN	
E3300M	**010604032**	**Bulk Oil seperator drain**	**On Sullair skid**	**CLOSE**	
E3301M	010604032	Oil Strain inlet isolation	On Sullair skid	OPEN	
E3302M	010604032	Oil Strain outlet isolation	On Sullair skid	OPEN	
E3306M	**010604032**	**Oil filter 3-way stop valve**	**On Sullair skid**	**Strainer #1**	
E3307M	**010604032**	**Oil filter pressure sensor isolation valve**	**On Sullair skid**	OPEN	
E3308M	**010604032**	**Oil filter Drain #1**	**On Sullair skid**	CLOSE	
E3311M	**010604032**	**Oil filter pressure sensor isolation valve**	**On Sullair skid**	OPEN	
E3312M	010604032	Oil filter Drain #2	On Sullair skid	CLOSE	
E3315M	010604032	PI Isolation Valve on Sullair	On Sullair skid	OPEN	
W3301A	010604032	Cooling water in to oil cooler	F.C.	auto	
W0100M	010604032	Inlet bleedown tap	On water line above compressor	CLOSE	
W0101M	010604032	Oulet bleedown Tap	On water line above compressor	CLOSE	
W0102M	010604032	Water outlet	On water line above compressor	OPEN	
W0103M	010604032	Oil cooler Valve bypass	On water line above compressor	Open ¼ turn	
W0104M	010604032	Water Inlet	On water line above compressor	OPEN	

A.2 Table 6.1.1.5 Gas storage valve line up

Tag	P&ID dwg	Description	Position	Check
H3484M	010604039	isolation valve on gas storage tank	OPEN	

A.3 Table 6.1.1.6 Charcoal bed and final filter valve line up

Tag	P&ID dwg	Description	Position	Check
H3306M	010604035	isolation valve between 4th stage coalescers and carbon adsorber bed inlet	OPEN	
H3476M	010604035	Purge Valve, Inlet side Oil removal charcoal bed	CLOSE	
H3477M	010604035	Regen gas supply isolation valve	CLOSE	
H3478M	010604035	Isolation valve, Bed Particulate Guard filter outlet side	OPEN	
H3479M	010604035	Gas Sample needle valve, Bed Particulate Guard filter outlet side	CLOSE	
H3480M	010604035	Purge valve, Bed Particulate Guard filter outlet side	CLOSE	
H3481M	010604035	Bleed Valve, Inlet side Oil removal charcoal bed	CLOSE	

A.4 Table 6.1.1.7 Valve line-up Table, Normal Operation: Oil Coalescers Valves

1st stage CLS-001A

Tag	Description	Position	check
H3396M	Bypass valve, Oil Float drainer, stage 1-A, DX	CLOSED	
H3397M	Isolation valve oil level sight glass indicator LI 3301, bottom	OPEN	
H3359M	Isolation valve oil level sight glass indicator LI 3301, top	OPEN	
H3358M	Isolation valve dp indicator DPI 3301	OPEN	
H3357M	Isolation valve dp indicator DPI 3301	OPEN	

1st stage CLS-001B

Tag	Description	Position	check
H3446M	Bypass valve, Oil Float drainer, stage 1-B, DX	CLOSED	
H3445M	Isolation valve oil level sight glass indicator LI 3302, bottom	OPEN	
H3398M	Isolation valve oil level sight glass indicator LI 3302, top	OPEN	
H3444M	Isolation valve dp indicator DPI 3302	OPEN	
H3399M	Isolation valve dp indicator DPI 3302	OPEN	

2nd stage CLS-002A

Tag	Description	Position	check
H3451M	Bypass valve, Oil Float drainer, stage 2-B, BX	CLOSED	
H3450M	Isolation valve oil level sight glass indicator LI 3303, bottom	OPEN	
H3447M	Isolation valve oil level sight glass indicator LI 3303, top	OPEN	
H3448M	Isolation valve dp indicator DPI 3303	OPEN	
H3449M	Isolation valve dp indicator DPI 3303	OPEN	

2nd stage CLS-002B

Tag	Description	Position	check
H3394M	Bypass valve, Oil Float drainer, stage 2-A, BX	CLOSED	
H3395M	Isolation valve oil level sight glass indicator LI 3300, bottom	OPEN	
H3319M	Isolation valve oil level sight glass indicator LI 3300, top	OPEN	
H3315M	Isolation valve dp indicator DPI 3300	OPEN	
H3314M	Isolation valve dp indicator DPI 3300	OPEN	

3rd stage CLS-003A

Tag	Description	Position	check
H3457M	Coalescing filter drain valve to compressor	CLOSED	
H3452M	Isolation valve oil level sight glass indicator LI 3304, bottom	OPEN	
H3453M	Isolation valve oil level sight glass indicator LI 3304, top	OPEN	

3rd stage CLS-003B

Tag	Description	Position	check
H3469M	Coalescing filter drain valve to compressor	CLOSED	
H3465M	Isolation valve oil level sight glass indicator LI 3306, bottom	OPEN	
H3466M	Isolation valve oil level sight glass indicator LI 3306, top	OPEN	

4th stage CLS-004A

Tag	Description	Position	check
H3463M	Coalescing filter drain valve to compressor	CLOSED	
H3460M	Isolation valve oil level sight glass indicator LI 3305, bottom	OPEN	
H3461M	Isolation valve oil level sight glass indicator LI 3305, top	OPEN	

4th stage CLS-004B

Tag	Description	Position	check
H3475M	Coalescing filter drain valve to compressor	CLOSED	
H3472M	Isolation valve oil level sight glass indicator LI 3307, bottom	OPEN	
H3471M	Isolation valve oil level sight glass indicator LI 3307, top	OPEN	

Table 6.1.1.9 Valve line-up Table, Compressor Pump and backfill

Tag	P&ID dwg	Description	Position	Check
H3305M	010604035	Compressor suction manual main isolation	CLOSED	
H3478M	010604035	Charcoal bed outlet filter manual isolation	CLOSED	
H3306M	010604035	Charcoal bed inlet	OPEN	
H3303M	010604071	Compressor manual bypass	OPEN	
H3310M	010604071	Manual Purge/instrument tap valve before after 2nd stage coelescers	OPEN when vacuum pump	

Table 6.1.1.9-a Valve line-up Table, Compressor Running by itself

Tag	P&ID dwg	Description	Location	Position	Check
H3478M	010604071	Charcoal bed outlet filter manual isolation	After particulate filter housing	OPEN	
H3306M	010604071	Charcoal bed inlet	Top of charcoal bed	OPEN	
H3303M	010604071	Compressor manual bypass		CLOSE	
H3305M	010604071	Compressor suction isolation	Top of return line near Sullair compressor	MANUAL	
H10947M	010604071	Isolation valve between helium shield and lead flows manifold and compressor low side return line	On manifold end for MKS mass flow controllers	CLOSE	

Table 6.1.1.9-b Valve line up other interface to compressor system

Tag	P&ID dwg	Description	Location	Position	Check
H3404M	010604015	Isolation valve to Sullair suction line	Kinney pumping system	CLOSE	
H3522M	CA6010001	¼ inch helium purge line	Vertical test dewar block house	CLOSE	
H3554M	010604071	¼ inch helium purge valve tee off tap on 2” HP	On above 2” piping near subcooler	CLOSE	
H9893C	010604048	Check valve	Above 1660S coldbox		
H10947M	010604071	5K circuit return Manifold isolation valve	System PFD diagram	CLOSE	
H3553M	010604071	Isolation valve HP helium to VTF ½” line	Near 1660 coldbox on 2 inch HP supply line	CLOSE	

Table 6.1.2.1-a 1660 Preliminary Valve lineup for system check out

Tag	P&ID Number	Description	Location	POSITION	Check
H9916A	010604048	Actuated isolation valve (V354) between Return bayonet line BC-3 and Exchanger HX2504B (E34B) cold end of plant	Top plate rear	CLOSED	
H9915A	010604048	Actuated isolation valve (V355) between Return bayonet line BC-4 and Exchanger HX2504A (E34A)	Top plate rear,	CLOSED	
H9914A	010604048	Actuated isolation valve (V356) between Return bayonet line BC-2 and Exchanger HX2504 (E34)	Top plate rear,	CLOSED	
H9917A	010604048	Actuated Cross-over valve (V350) between Return bayonet line BC-2 and Cooldown return bypass line low side	Top plate front	CLOSED	
H9918A	010604048	Actuated Cross-over valve (V351) between Return bayonet line BC-4 and Cooldown return bypass line low side	Top plate front	CLOSED	
H9919A	010604048	Actuated Cross-over valve (V352) between Return bayonet line BC-3 and Cooldown return bypass line low side	Top plate front	CLOSED	
H9907A	010604048	Actuated cooldown return valve(V389) from cooldown return header to between HX2502 (E32) and HX-2503 (E33)	Top plate front	CLOSED	
H9905A	010604048	Actuated cooldown return valve(V387) from cooldown return header to between HX2500 (E30) and HX-2501 (E31)	Top plate front	CLOSED	
H9912A	010604048	Actuated isolation valve (V367) between JT supply and bayonet BC-1	Top plate rear	CLOSED	
H9909A	010604048	Actuated Cross -over valve (V343)from HP JT loop to BC-5 /H9911A	Top plate front, left	CLOSED	
H9911A	010604048	Actuated Isolation valve (V342) for BC-5 connection	Top plate rear, right	CLOSED	
H9906A	010604048	Actuated Cooldown supply crossover valve (V385) from HP after charcoal beds (60K)into cooldown line supply line		CLOSED	

Table 6.1.2.1-b 1660 Preliminary Valve lineup for system check out

H9908A	010604048	cooldown Crossover valve (V382) to BC-6 connection from expanders 9A/B	Top plate front, right	CLOSED	
N6000M	010604048	Manual isolation valve, LO side of DPT6090N		OPEN	
N6001M	010604048	Manual isolation valve, HI side of DPT6090N		OPEN	
N6002M	010604048	Manual equalization valve, on DPT6090N		CLOSED	

H9913A	010604048	Actuated isolation valve (V318) on discharge side of expanders 9A/B	Top plate front, right	OPEN	
H9821M	010604048	Manual purge valve (V312) on HP helium line UPSTREAM of boiler		CLOSED	
H9807M	010604048	Manual isolation valve(V339) for low side tap(to atmosphere) on compressor return line		CLOSED	
H9813M	010604048	Bleed Valve from high pressure line precooler supply to atmosphere (V397)		CLOSED	
H9863M	010604048	Manual purge valve (V377)on return line Bayonet BC-3		CLOSED	
H98xxM	010604048	Manual purge valve (V376)on return line Bayonet BC-4		CLOSED	
H9861M	010604048	Manual purge valve (V373)on return line Bayonet BC-2		CLOSED	
H9811M	010604048	Manual needle valve (V396) for supplying warm helium purge upstream of JT5 valve (JT 307)		CLOSED	

Table 6.1.2.1-c Charcoal Adsorber Beds Valves

Tag	P&ID Number	Description	Location	POSITION	Check
H9849M	010604048	Upstream manual isolation valve (V31) of charcoal bed F2001H (E36-A)	Top plate front right	CLOSED	
H9852M	010604048	Downstream manual isolation valve (V32) of charcoal bed F2001H (E36-A)	Top plate front right	CLOSED	
H9850M	010604048	Upstream manual isolation valve (V33) of charcoal bed F2002H (E36-B)	Top plate front right	OPEN	
H9851M	010604048	Downstream manual isolation valve (V34) of charcoal bed F2002H (E36-B)	Top plate front right	OPEN	

Tag	P&ID Number	Description	Location	POSITION	Check
H9825M	010604048	Regen vacuum pumpout / backfill cross over valve (V35) for charcoal bed B		CLOSED	
H9824M	010604048	Regen vacuum pumpout / backfill cross over valve(V36) for charcoal bed A		CLOSED	
H9817M	010604048	Manual isolation valve, to evacuation line from low pressure compressor return line		CLOSED	
H9819M	010604048	Manual isolation valve(V43) of evacuation line from vacuum pump		CLOSED	
H9818M	010604048	Manual blowdown dump or external source connection valve(V44) for evacuation header section isolated by valve **H9819M**		CLOSED	

Table 6.1.2.1-d Coldbox isolation valves

Tag	P&ID Number	Description	Location	POSITION	Check
H9809M	010604048	1660 Coldbox High pressure inlet Manual isolation valve. **H9809M** (V391M)	Left rear corner of 1660 skid	CLOSED	

Table 6.1.2.1-e No.1 Engine maintenance valves

Tag	P&ID Number	Description	Location	POSITION	Check
H9828M	010604048	Manual isolation valve (V61) evacuation line for Inlet side to expander EX8A (E37A)		CLOSED	
H9829M	010604048	Manual isolation valve (V63) evacuation line for Inlet side to expander EX8B (E37B)		CLOSED	
H9842M	010604048	Manual isolation valve (V18) engine purge line out from outlet side of expander EX9A (E37A)		CLOSED	
H9831M	010604048	Manual isolation valve (V25) engine purge line to Inlet side to expander EX8B (E37B)		CLOSED	

Table 6.1.2.1-f No.2 Engine maintenance valves

Tag	P&ID Number	Description	Location	POSITION	Check
H9836M	010604048	Manual isolation valve (V62) evacuation line for Inlet side to expander EX9A (E39A)		CLOSED	
H9837M	010604048	Manual isolation valve (V64) evacuation line for Inlet side to expander EX9B (E39B)		CLOSED	
H9838M	010604048	Manual isolation valve (V17) engine purge line to Inlet side to expander EX9A (E39A)		CLOSED	
H9839M	010604048	Manual isolation valve (V27) engine purge line to Inlet side to expander EX9B (E39B)		CLOSED	

Table 6.1.2.1-g Engine inlet isolationvalves

Tag	P&ID Number	Description	Location	POSITION	Check
H9853M	010604048	Manual isolation valve (V315) inlet to expander EX8A (E37A)		CLOSED	
H9854M	010604048	Manual isolation valve (V325) inlet to expander EX8B (E37B)		CLOSED	
H9857M	010604048	Manual isolation valve (V317) inlet to expander EX9A (E39A)		CLOSED	
H9858M	010604048	Manual isolation valve (V337) inlet to expander EX9B (E39B)		CLOSED	

Table 6.1.2.3 Blowdown of the main heat exchanger high pressure side

Tag	P&ID Number	Description	Location	POSITION	Check
H9821M	010604048	Manual purge valve (V312) on HP helium line UPSTREAM of boiler		OPEN	
H9904A	010604048	Two-way flow split control valve (V806) betwenn HX-E30 and precooler	Left rear corner of 1660 skid	50% MANUAL	
H9809 M	01060404 8	1660 Coldbox High pressure inlet Manual isolation valve. (V391M)	Left rear corner of 1660 skid	Crack open	
H9903A	01060404 8	1660 Coldbox High pressure inlet solenoid actuated isolation valve N.C. H9903A (V323A)	Left rear corner of 1660 skid	AUTO	
H9903A	01060404 8	1660 Coldbox High pressure inlet solenoid actuated isolation valve N.C. H9903A (V323A)	Left rear corner of 1660 skid	CLOSE	
H9821M	010604048	Manual purge valve (V312) on HP helium line UPSTREAM of boiler		OPEN ½ TURN	
H9821M	010604048	Manual purge valve (V312) on HP helium line UPSTREAM of boiler		CLOSE	
H9904A	010604048	Two-way flow split control valve (V806) betwenn HX-E30 and precooler	Left rear corner of 1660 skid	AUTO MODE	

Table 6.1.2.4 Blowdown of the main heat exchanger using HP bottles

Tag	P&ID Number	Description	Location	POSITION	Check
H9813M	010604048	Bleed Valve from high pressure line precooler supply to atmosphere (V397)	Left rear corner of 1660 skid		
H9809M	010604048	1660 Coldbox High pressure inlet Manual isolation valve. H9809M (V391M)	Left rear corner of 1660 skid		
H9903A	010604048	1660 Coldbox High pressure inlet solenoid actuated isolation valve N.C. H9903A (V323A)	Left rear corner of 1660 skid	AUTO	
H9903A	010604048	1660 Coldbox High pressure inlet solenoid actuated isolation valve N.C. H9903A (V323A)	Left rear corner of 1660 skid	CLOSE	
H9821M	010604048	Manual purge valve (V312) on HP helium line UPSTREAM of boiler		OPEN ½ TURN	
H9821M	010604048	Manual purge valve (V312) on HP helium line UPSTREAM of boiler		CLOSE	
H9904A	010604048	Two-way flow split control valve (V806) betwenn HX-E30 and precooler	Left rear corner of 1660 skid	AUTO MODE	
H9813M	010604048	Bleed Valve from high pressure line precooler supply to atmosphere (V397)	Left rear corner of 1660 skid	CLOSE	

Table 6.1.2.5-a Regeneration of 80K Charcoal adsorber A

Tag	P&ID Number	Description	Location	POSITION	Check
H9849M	010604048	Upstream manual isolation valve (V31) of charcoal bed F2001H (E36-A)	Front Right Top Plate	CLOSE	
H9852M	010604048	Downstream manual isolation valve (V32) of charcoal bed F2001H (E36-A)	Front Right Top Plate	CLOSE	
H9850M	010604048	Upstream manual isolation valve (V33) of charcoal bed F2002H (E36-B)	Front Right Top Plate	OPEN	
H9851M	010604048	Downstream manual isolation valve (V34) of charcoal bed F2002H (E36-B)	Front Right Top Plate	OPEN	

H9818M	010604048	Manual purge or external source connection valve(V44) for evacuation header section isolated by valve H9819M	Side Panel	OPEN	

Bed A

H9825M	010604048	Regen vacuum pumpout cross over valve (V35) for charcoal bed B	Side Panel	OPEN SLOWLY	

H9818M	010604048	Manual purge or external source connection valve(V44) for evacuation header section isolated by valve H9819M	Side Panel	CLOSE	

H9819M	010604048	Manual isolation valve(V43) of evacuation line from vacuum pump	Side Panel	OPEN	

H9819M	010604048	Manual isolation valve(V43) of evacuation line from vacuum pump	Side Panel	CLOSE	

BED A

H9852M	010604048	Downstream manual isolation valve (V32) of charcoal bed F2001H (E36-A)	Front Right Top Plate	Crack OPEN	

Backfill

H9852M	010604048	Downstream manual isolation valve (V32) of charcoal bed F2001H (E36-A)	Front Right Top Plate	CLOSE	

H9849M	010604048	Upstream manual isolation valve (V31) of charcoal bed F2001H (E36-A)	Front Right Top Plate	OPEN	

H9817M	010604048	Manual isolation valve, to evacuation line from low pressure compressor return line		Crack OPEN	

H9824M	010604048	Regen vacuum pumpout cross over valve(V36) for charcoal bed A	Side Panel	OPEN SLOWLY	

Table 6.1.2.5 -b Regeneration of 80K Charcoal adsorber B

Tag	P&ID Number	Description	Location	POSITION	Check
H9849M	010604048	Upstream manual isolation valve (V31) of charcoal bed F2001H (E36-A)	Front Right Top Plate	OPEN	
H9852M	010604048	Downstream manual isolation valve (V32) of charcoal bed F2001H (E36-A)	Front Right Top Plate	OPEN	
H9850M	010604048	Upstream manual isolation valve (V33) of charcoal bed F2002H (E36-B)	Front Right Top Plate	CLOSE	
H9851M	010604048	Downstream manual isolation valve (V34) of charcoal bed F2002H (E36-B)	Front Right Top Plate	CLOSE	

Tag	P&ID Number	Description	Location	POSITION	Check
H9818M	010604048	Manual purge or external source connection valve(V44) for evacuation header section isolated by valve H9819M	Side Panel	OPEN	
H9824M	010604048	Regen vacuum pumpout cross over valve(V36) for charcoal bed A	Side Panel	OPEN SLOWLY	
H9818M	010604048	Manual purge or external source connection valve(V44) for evacuation header section isolated by valve H9819M	Side Panel	CLOSE	
H9819M	010604048	Manual isolation valve(V43) of evacuation line from vacuum pump	Side Panel	OPEN	
H9819M	010604048	Manual isolation valve(V43) of evacuation line from vacuum pump	Side Panel	CLOSE	

BED B Backfill and cooldown

H9851M	010604048	Downstream manual isolation valve (V34) of charcoal bed F2002H (E36-B)	Front Right Top Plate	Crack OPEN	

Backfill

H9851M	010604048	Downstream manual isolation valve (V34) of charcoal bed F2002H (E36-B)	Front Right Top Plate	CLOSE	
H9850M	010604048	Upstream manual isolation valve (V33) of charcoal bed F2002H (E36-B)	Front Right Top Plate	CLOSE	
H9817M	010604048	Manual isolation valve, to evacuation line from low pressure compressor return line		Crack OPEN	
H9825M	010604048	Regen vacuum pumpout cross over valve (V35) for charcoal bed B	Side Panel	CRACK OPEN	

H9850M	010604048	Upstream manual isolation valve (V33) of charcoal bed F2002H (E36-B)	Front Right Top Plate	CLOSE	

H9825M	010604048	Regen vacuum pumpout cross over valve (V35) for charcoal bed B	Side Panel	CLOSE	

H9817M	010604048	Manual isolation valve, to evacuation line from low pressure compressor return line		CLOSE	

Table 6.1.3.1 Liquid Helium 1000 Gallon Storage Dewar Preparation

Tag	P&ID Number	Description	Location	POSITION	Check
H3490M	010604034	Manual Isolation valve, on Dewar 1/2" T line, bottom feed coming Lhe from 1660 JT valve	Top of dewar, bayonet line	OPEN	
H3491M	010604034	Manual Isolation valve, on Dewar 3/4" T line, 2-phase feed coming Wet expander into dewar	Top of dewar, bayonet line	**CLOSE LOTO**	
H3492M	010604034	Manual Isolation valve, on Dewar 3/4" T line, vapor return to 1660 low pressure return	Top of dewar, bayonet line	OPEN	
H3493M	010604034	Manual Isolation valve, on Dewar 1/2" T line, bottom liquid draw Lhe from dewar	Top of dewar, bayonet line	CLOSE	
H3494R	010604034	Relief valve, 1000 Gal dewar, 40 psig	Top of dewar	RELIEF	
H3496M	010604034	Manual Isolation valve, Hi side, Liquid level head DP sensor LI 3314H	Top of dewar	OPEN	
H3497M	010604034	Manual Isolation valve, exit vent for vapor cooled shield / neck intercept bleedflow	Top of dewar	CLOSE	
H3498M	010604034	Manual Isolation valve, Low side, Liquid level head DP sensor LI 3314H	Top of dewar	OPEN	
H4911M	010604034	Purge Valve for helium storage Dewar	Top of dewar	CLOSE	
H3499M	010604034	Manual Isolation valve vapor side return during cooldown of dewar back to compressor suction	Top of dewar	CLOSE	
V3304M	010604034	Bleed up valve for insulating vacuum space liquid helium dewar	Top of dewar	CLOSE	
V3306M	010604034	isolation valve for vacuum gage	Top of dewar	CLOSE	
FIC3304H	010604034	Rotometer Flow indicator of vapor cooled shield flow with manual metering valve	Front panel dewar	OPEN	
EHTR-1	010604034	Boil-off heater in dewar, variac	Front panel dewar	ZERO %	
LI3313H	010604034	Liquid level sensor for Lhe dewar, Superconducting probe	HMI		
LI3314H	010604034	Liquid level sensor for Lhe Dewar, local DP level gage	Front panel dewar		
LT3313H	010604034	Liquid Helium Storage Dewar level Probe	Top of dewar		
PI3314H	010604034	Pressure indicator, local dial gage, liquid helium storage dewar pressure	Front panel dewar		
PT3313H	010604034	30 psia pressure sensor, Liquid helium dewar	HMI		
PT3315V	010604034	Vacuum gage, thermocouple DV-6	Front panel dewar	<50 mTorr	

Table Table 6.1.3.2-a Independent pump and purge LHe dewar

Tag	P&ID Number	Description	Location	POSITION	Check
H3490M	010604034	Manual Isolation valve, on Dewar 1/2" T line, bottom feed coming Lhe from 1660 JT valve	Top of dewar, bayonet line	CLOSE	
H3491M	010604034	Manual Isolation valve, on Dewar 3/4" T line, 2-phase feed coming Wet expander into dewar	Top of dewar, bayonet line	CLOSE LOTO	
H3492M	010604034	Manual Isolation valve, on Dewar 3/4" T line, vapor return to 1660 low pressure return	Top of dewar, bayonet line	CLOSE	
H3493M	010604034	Manual Isolation valve, on Dewar 1/2" T line, bottom liquid draw Lhe from dewar	Top of dewar, bayonet line	CLOSE	
H4911M	010604034	Manual Isolation valve vapor side return during cooldown of dewar back to compressor suction	Top of dewar	CLOSE	
H3499M	010604034	Pump and purge / shut down check, top side, isolation valve, vapor space	Top of dewar	Pump & Purge	

Table 6.1.3.2-b Liquid Helium 1000 Gallon Storage Dewar Preparation Independent pump and purge

Tag	P&ID Number	Description	Location	POSITION	Check
H3490M	010604034	Manual Isolation valve, on Dewar 1/2" T line, bottom feed coming Lhe from 1660 JT valve	Top of dewar, bayonet line	OPEN	
H3491M	010604034	Manual Isolation valve, on Dewar 3/4" T line, 2-phase feed coming Wet expander into dewar	Top of dewar, bayonet line	CLOSE LOTO	
H3492M	010604034	Manual Isolation valve, on Dewar 3/4" T line, vapor return to 1660 low pressure return	Top of dewar, bayonet line	OPEN	
H3493M	010604034	Manual Isolation valve, on Dewar 1/2" T line, bottom liquid draw Lhe from dewar	Top of dewar, bayonet line	OPEN	

Table 6.1.3.2-a Sobcooler Helium Bath Volume Pump and Purge

Tag	P&ID Number	Description	Location	POSITION	Check
H3330A	010604071	Actuated control valve from Liquid helium draw from 1000 gal storage dewar to subcooler fillvalve	On distribution valvebox PHPK	CLOSE	
H3486M	010604071	Manual isolation valve: Return vapor subcooler bath to vapor return line 1660 Plant BC-2	On transfer line behind subcooler	CLOSE	

Tag	P&ID Number	Description	Location	POSITION	Check
H3373M	010604087	Isolation valve for 1/2 psig relief **H3327R**	On subcooler skid	CLOSE	
H3376M	010604087	Isolation valve for instrumentation	On subcooler skid		
H3377M	010604087	Cooldown return valve to compressor suction	On subcooler skid	CLOSE	
H3378M	010604087	Isolation valve for shield flow flowmeter	On subcooler skid	CLOSE	
FE3303	010604087	Heat shield outlet flow	On subcooler skid	CLOSE	
LT3303H	010604087	Subcooler level probe	On subcooler skid	OFF	
PI3302H	010604087	Pressure indicator, local dial gage, subcooler bath pressure	On subcooler skid		

Table 6.1.6.1

Tag	P&ID Number	Description	Location	FAIL POSITION
H3382M	010604089	Manual isolation valve,Warm helium supply purge to wet expander inlet side line	Wet expander skid	
H3384M	010604089	Manual isolation valve from Supply line side line inlet to wetepxander to cooldown return line	Wet expander skid	
H3385A	010604089	Actuated Control valve, wet expander inlet valve	Wet expander skid	F.C.
H3386M	010604089	Bayonet isolation valve, inlet side, used only if transfer line is disconnected	Wet expander skid	
H3391M	010604089	Manual isolation valve, discharge line wetexpander	Wet expander skid	
H3392M	010604089	Manual isolation valve, to cooldown return line back to 1660 compressor suction line	Wet expander skid	

Table 6.1.6.2 Independent Pump and purge

Tag	P&ID Number	Description	Location	FAIL POSITION
H3382M	010604089	Manual isolation valve,Warm helium supply purge to wet expander inlet side line	Wet expander skid	
H3384M	010604089	Manual isolation valve from Supply line side line inlet to wetepxander to cooldown return line	Wet expander skid	
H3385A	010604089	Actuated Control valve, wet expander inlet valve	Wet expander skid	F.C.
H3386M	010604089	Bayonet isolation valve, inlet side, used only if transfer line is disconnected	Wet expander skid	
H3391M	010604089	Manual isolation valve, discharge line wetexpander	Wet expander skid	
H3392M	010604089	Manual isolation valve, to cooldown return line back to 1660 compressor suction line	Wet expander skid	

Table 6.1.7-a ERL cryomodules 5-CELL and SRFGUN Cryostat System Preparation Valve Line-up: <u>Large vertical test dewar side</u>

Tag	Location P&ID	Description	Location Hardware	Position	Check
H3320A	010604071	Low pressure return from 40" Vertical Test Dewar to 20 Torr header	Distribution Valve box	LOTO CLOSED Handwheel	
H3322A	010604071	1.1 atm vapor return from 40" Vertical Test Dewar	Distribution Valve box	LOTO CLOSED Handwheel	
H3327A	010604071	Liquid supply isolation to 40" VTD from 1000 gallon LHe dewar	Distribution Valve box	LOTO CLOSED Handwheel	
H3328A	010604071	Liquid supply isolation to 40" VTD	Distribution Valve box	LOTO CLOSED Handwheel	
H3512A	CA6010001	Liquid fill valve into 40" VTD	40" Vertical Test Dewar	LOTO CLOSED	
H3513A	CA6010001	Cooldown supply bottom valve into 40" VTD	40" Vertical Test Dewar	LOTO CLOSED	
H3522M	CA6010001	Warm helium supply purge manual metering valve	40" Vertical Test Dewar	LOTO CLOSED	
H3521A	CA6010001	Warm helium supply purge solenoid isolation valve	40" Vertical Test Dewar	LOTO CLOSED	
N3315A	010604071	LN2 control to N2 shield 40" VTD	On Cryoduct trunk above valvebox	LOTO CLOSED	
N3343M	CA6010001	External supply from bottle: manual metering valve, Nitrogen or helium	40" Vertical Test Dewar	LOTO CLOSED	

Table 6.1.7-b ERL cryomodules 5-CELL and SRFGUN Cryostat System: 28 Inch Test Dewar Small Block House side valve line up

Tag	Location P&ID	Description	Location	Position	Check
H3316A	010604071	Vapor return control valve to 20 Torr Header from small test dewar	Outside small block house, near 1000 Gal Cryofab dewar	CLOSE	
H3317M	010604071	Manual Isolation valve for atmospheric discharge	Outside small block house, near 1000 Gal Cryofab dewar	CLOSE	
H3488A	010604071	Return Cross over valve from small test dewar volume to 1.2 atm low pressure line back to Sullair helium compressor suction	Outside small block house, near 1000 Gal Cryofab dewar	CLOSE	
H3487A	010604071	Small Control valve, small test dewar volume to 20Torr header to Kinney vacuum pump	Outside small block house, near 1000 Gal Cryofab dewar	CLOSE	
H3545A	010604071	Test Dewar atmospheric vent valve	Outside small block house, near 1000 Gal Cryofab dewar	CLOSE	

Table 6.1.7-c ERL cryomodules 5-CELL and SRFGUN Cryostat System: ERL side distribution valve line-up Pump and backfill

Tag	Location P&ID	Description	Location	Position	Check
H3323A	010604071	Actuated Helium Valve, Return vapor from ERL cryomodules to 4.5K cryoplant	On distribution valvebox PHPK	OPEN	
H3324A	010604071	Actuated Helium Control Valve, Return vapor from ERL cryomodules to 20 Torr helium vacuum header	On transfer line coming from ERL VJR	OPEN	
H3326M	010604071	Manual Purge valve, on Vapor return line from ERL CRYOMODULES	On distribution valvebox PHPK	CLOSE	
H3328A	010604071	Actuated valve with hand wheel, isolates Subcooler subcooled supply to Test dewar.	On distribution valvebox PHPK	CLOSE	
H3329A	010604071	Actuated valve, isolates Subcooler subcooled supply to ERL cryomodules.	On distribution valvebox PHPK	CLOSE	
H3332A	010604071	Actuated control valve. Controls 4 atm Supply helium from plant to subcooler coils	On transfer line behind distribution valvebox PHPK	CLOSE	
H3333M	010604071	Manual Purge valve, on liquid draw line from LHE dewar to valves **H3327A** and **H3330A**	On distribution valvebox PHPK	CLOSE	
H3335M	010604071	Manual Purge valve, on liquid supply line from LHE dewar to test dewar	On distribution valvebox PHPK	CLOSE	
H3336M	010604071	Manual purge valve, on vapor return line from Lhe dewar to 1660 plant	On transfer line behind distribution valvebox PHPK	CLOSE	
H3339M	010604071	Manual purge valve, volume on liquid supply line from subcooler to ERL cryomodules, between valves H3329A and H3353A, H3354A,H3356M,H1404A, H1405A	On distribution valvebox PHPK	CLOSE	
H3341M	010604071	Manual purge valve, volume on liquid supply line through subcooler between valves H3332A and H3328A, H33529A	On distribution valvebox PHPK	CLOSE	
H3342A	010604071	Vapor return control valve to 20 Torr Header from SRF Gun boil-off	On SRF GUN VALVEBOX	OPEN	
H3343A	010604071	Vapor return control valve to 20 Torr Header from 5 cell cavity boil-off	On 5 cell VALVEBOX	OPEN	
H10896A	010604071	20Torr Cold vapor Return valve for 5 cell	On transfer lines, west, near 5-cell cryostat	CLOSED	
H10922A	010604071	20 Torr Cold vapor return valve for 5 cell	On transfer lines, west, near 5-cell cryostat	CLOSED	
H10947M	010604071	Isolation valve for helium shield and lead flows	On manifold end for MKS mass flow controllers	CLOSED	

H3353A	010604071	Actuated control valve, Liquid helium supply top fill reservoir volume for 5 cell SRF cavity	On 5 cell VALVEBOX	OPEN	
H3354A	010604071	Actuated control valve, Liquid helium supply to bottom fill 5 cell SRF cavity	On 5 cell VALVEBOX	OPEN	
H3356M	010604071	Manual isolation valve supply side of 5K circuits SRF Gun cryostat	On 5 cell VALVEBOX	OPEN	
H3360M	010604071	Manual isolation flow, outlet side massflow controller 5K circuit solenoid SRFGun	On manifold for MKS mass flow controllers	OPEN	
H3361M	010604071	Manual isolation flow, inlet side massflow controller 5K circuit solenoid SRFGun	On manifold for MKS mass flow controllers	OPEN	
H3363M	010604071	Manual isolation flow, outlet side massflow controller 5K circuit FPC#1 SRFGun	On manifold for MKS mass flow controllers	OPEN	
H3364M	010604071	Manual isolation flow, inlet side massflow controller 5K circuit FPC#1 SRFGun	On manifold for MKS mass flow controllers	OPEN	
H3366M	010604071	Manual isolation flow, outlet side massflow controller 5K circuit FPC#2 SRFGun	On manifold for MKS mass flow controllers	OPEN	
H3367M	010604071	Manual isolation flow, inlet side massflow controller 5K circuit FPC#2 SRFGun	On manifold for MKS mass flow controllers	OPEN	
H3369M	010604071	Manual isolation flow, outlet side massflow controller 5K circuit Tuner 5 cell Cavity	On manifold for MKS mass flow controllers	OPEN	
H3370M	010604071	Manual isolation flow, inlet side massflow controller 5K circuit Tuner 5 cell Cavity	On manifold for MKS mass flow controllers	OPEN	
H3486M	010604071	Manual isolation valve: Return vapor subcooler bath to vapor return line 1660 Plant BC-2	On transfer line behind subcooler	OPEN	
H3529M	010604071	Manual isolation flow, outlet side massflow controller 5K circuit Endflange-1 SRFGun	On manifold for MKS mass flow controllers	OPEN	
H3530M	010604071	Manual isolation flow, inlet side massflow controller 5K circuit Endflange-1 SRFGun	On manifold for MKS mass flow controllers	OPEN	
H3531M	010604071	Manual isolation flow, inlet side massflow controller 5K circuit Endflange#2 SRFGun	On manifold for MKS mass flow controllers	OPEN	
H3532M	010604071	Manual isolation flow, outlet side massflow controller 5K circuit Endflange#2 SRFGun	On manifold for MKS mass flow controllers	OPEN	
H3533A	010604071	Communication valve for vessel bottom fill line 5-cell system	5-cell valvebox	OPEN	
H3536E	010604071	Thermal mass flowcontroller valve, actuated. 5-cell cavity 5K circuit FPC coupler	On manifold for MKS mass flow controllers	OPEN	
H3537E	010604071	Thermal mass flowcontroller valve, actuated. 5-cell cavity 5K circuit End Flange, FPC side	On manifold for MKS mass flow controllers	OPEN	

H3538E	010604071	Thermal mass flowcontroller valve, actuated. 5-cell cavity 5K circuit End Flange, Tuner side	On manifold for MKS mass flow controllers	OPEN	
H3539E	010604071	Thermal mass flowcontroller valve, actuated. 5-cell cavity 5K circuit Tuner	On manifold for MKS mass flow controllers	OPEN	
H3540E	010604071	Thermal mass flowcontroller valve, actuated. SRFGun End Flange 2	On manifold for MKS mass flow controllers	OPEN	
H3541E	010604071	Thermal mass flowcontroller valve, actuated. SRFGun End Flange 1	On manifold for MKS mass flow controllers	OPEN	
H3542E	010604071	Thermal mass flowcontroller valve, actuated. SRFGun FPC-2	On manifold for MKS mass flow controllers	OPEN	
H3543E	010604071	Thermal mass flowcontroller valve, actuated. SRFGun FPC-1	On manifold for MKS mass flow controllers	OPEN	
H3544E	010604071	Thermal mass flowcontroller valve, actuated. SRFGun solenoid	On manifold for MKS mass flow controllers	OPEN	
H3551M	010604071	Manual valve to atmosphere	On manifold for MKS mass flow controllers	CLOSED	
H3552M	010604071	Manual valve to atmosphere	On manifold for MKS mass flow controllers	CLOSED	
H10930M	010604071	Manual isolation flow, outlet side massflow controller 5K circuit FPC on 5 cell Cavity	On manifold for MKS mass flow controllers	OPEN	
H10928M	010604071	Manual isolation flow, outlet side massflow controller 5K circuit FPC on 5 cell Cavity	On manifold for MKS mass flow controllers	OPEN	
H10934M	010604071	Manual isolation flow, outlet side massflow controller 5K circuit Endflange-FPCside on 5 cell Cavity	On manifold for MKS mass flow controllers	OPEN	
H10932M	010604071	Manual isolation flow, outlet side massflow controller 5K circuit Endflange-FPCside on 5 cell Cavity	On manifold for MKS mass flow controllers	OPEN	
H10938M	010604071	Manual isolation flow, outlet side massflow controller 5K circuit Endflange-Tunerside on 5 cell Cavity	On manifold for MKS mass flow controllers	OPEN	
H10936M	010604071	Manual isolation flow, outlet side massflow controller 5K circuit Endflange-Tunerside on 5 cell Cavity	On manifold for MKS mass flow controllers	OPEN	

H3554M	010604071				
H3339M	010604071	Manual purge valve, volume on liquid supply line from subcooler to ERL cryomodules, between valves H3329A and H3353A, H3354A,H3356M,H1404A, H1405A	On distribution valvebox PHPK	Connect to H3554M	

Table 6.1.9 Cold Cathode Loop Preparation Valve lineup

Tag	P&ID Number	Description	Location	POSITION	Check
N3304M	010604088	Manual isolation valve, LN2 purge	SRF GUN Valvebox EDEN	OPEN	
N3306M	010604088	Manual isolation valve, GN2 purge	SRF GUN Valvebox EDEN	OPEN	
N3307A	010604088	Actuated Control valve, LN2 phase seperator fill	SRF GUN Valvebox EDEN	OPEN	
N3310A	010604088	Actuated Control valve, LN2 pressure control	SRF GUN Valvebox EDEN	AUTO @ 15 psig	
N3345M	010604088	Manual isolation valve, cathode supply	On transfer line to cathode cart	OPEN	

After completion of the purge close **N3306M and N3304M**

Tag	P&ID Number	Description	Location	POSITION	Check
N3304M	010604088	Manual isolation valve, LN2 purge	SRF GUN Valvebox EDEN	CLOSE	
N3306M	010604088	Manual isolation valve, GN2 purge	SRF GUN Valvebox EDEN	CLOSE	

Table 6.1.10-a Large 40 inch Vertical Test Dewar Preparation Initial Lineup check

Tag	Location P&ID	Description	Location	Position	Check
H3335M	010604071	Manual Purge valve, on liquid supply line from LHE dewar to test dewar	On distribution valvebox PHPK	CLOSED	
H3321M	010604071	Manual Purge valve, on Vapor return line from 40 inch test dewar	On distribution valvebox PHPK	CLOSED	
H3328A	010604071	Actuated valve with hand wheel, isolates Subcooler subcooled supply to Test dewar.	On distribution valvebox PHPK	LOTO CLOSED	
H3327A	010604071	Actuated control valve from Liquid helium draw from 1000 gal storage dewar to VTD supply	On distribution valvebox PHPK	LOTO CLOSED	
H3320A	010604071	Low pressure return from 40” Vertical Test Dewar	Distribution Valve box	LOTO CLOSED	
H3322A	010604071	Liquid supply isolation to 40” VTD	Distribution Valve box	LOTO CLOSED	
H3512A	CA6010001	Liquid fill valve into 40” VTD	40” Vertical Test Dewar	LOTO CLOSED	
H3513A	CA6010001	Cooldown supply bottom valve into 40” VTD	40” Vertical Test Dewar	LOTO CLOSED	

H3522M	CA6010001	Warm helium supply purge manual metering valve	40” Vertical Test Dewar	Remove LOTO CLOSED	
H3521A	CA6010001	Warm helium supply purge solenoid isolation valve	40” Vertical Test Dewar	CLOSED	
H3514M	CA6010001	Manual pump out port, for helium volume, isolation valve	40” Vertical Test Dewar	CLOSED	
N3315A	010604071	Liquid Nitrogen supply control valve thermal shield	Distribution VJR line to VTD	Remove LOTO CLOSED	
N3343M	CA6010001	External supply from bottle: manual metering valve, Nitrogen or helium or dry air	40” Vertical Test Dewar	Remove LOTO CLOSED	
N3314M	CA6010001	vent	40” Vertical Test Dewar	CLOSED	
N3342A	CA6010001	External supply from bottle solenoid isolation valve	40” Vertical Test Dewar	CLOSED	

Table 6.1.10-b Large 40 inch Vertical Test Dewar Pump & Backfill

Tag	Location P&ID	Description	Location	Position	Check
H3514M	CA6010001	Manual pump out port, for helium volume, isolation valve	40” Vertical Test Dewar	OPEN	

Pumpdown

Backfill to 1 atm

H3522M	CA6010001	Warm helium supply purge manual metering valve	40” Vertical Test Dewar	OPEN	
H3521A	CA6010001	Warm helium supply purge solenoid isolation valve	40” Vertical Test Dewar	OPEN	

Or

N3343M	CA6010001	External supply from bottle: manual metering valve, Nitrogen or helium or dry air	40” Vertical Test Dewar		
N3342A	CA6010001	External supply from bottle solenoid isolation valve	40” Vertical Test Dewar		

Startup and cooldown of 1660 Coldbox with liquid in LHe dewar

Table 6.2.6-a Startup and cooldown of 1660 Coldbox with liquid in LHe dewar

Tag	P&ID Number	Description	Location	POSITION	Check
H3330A	010604071	Subcooler bath fill valve. Actuated control valve from Liquid helium draw from 1000 gal storage dewar to subcooler fill line	On distribution valvebox PHPK	CLOSED	
H3327A	010604071	Actuated control valve from Liquid helium draw from 1000 gal storage dewar	On distribution valvebox PHPK	CLOSED	
H3331A	010604071	Actuated control valve. Vapor return from Liquid helium storage dewar	On transfer line behind distribution valvebox PHPK	CLOSED	
H9912A	010604048	Actuated isolation valve (V367) between JT supply and bayonet BC-1	1660 Top plate rear	CLOSED	

Table 6.2.6-b Startup and cooldown of 1660 Coldbox with liquid in LHe dewar

Tag2	P&ID Number	Description	Location	POSITION	Check
H4911M	010604034	Pump and purge / shut down check, top side, isolation valve, vapor space	Top of dewar	OPEN Check valve	
H3499M	010604034	Manual Isolation valve vapor side return during cooldown of dewar back to compressor suction	Top of dewar	OPEN	
H9914A	010604048	Actuated isolation valve (V356) between Return bayonet line BC-2 and Exchanger HX2504 (E34)	Top plate rear,	OPEN	
H3331A	010604071	Actuated control valve. Vapor return from Liquid helium storage dewar	On transfer line behind distribution valvebox PHPK	OPEN 25%	

Table 6.2.6-c Startup and cooldown of 1660 Coldbox with liquid in LHe dewar: Expander valve line up
Engine Outlet

H9856M	010604048	Manual isolation valve (V316) outlet to expander EX8A (E37A)	Left Rear Top Plate	OPEN	
H9860M	010604048	Manual isolation valve (V318) outlet to expander EX9A (E39A)	Left Front Top Plate	OPEN	

Or / and

H9855M	010604048	Manual isolation valve (V326) outlet to expander EX8B (E37B)	Right Front Top Plate	OPEN	
H9859M	010604048	Manual isolation valve (V328) outlet to expander EX9B (E39B)	Right Rear Top Plate	OPEN	

Engine Inlet

H9853M	010604048	Manual isolation valve (V315) inlet to expander EX8A (E37A)	Left Rear Top Plate	OPEN	
H9857M	010604048	Manual isolation valve (V317) inlet to expander EX9A (E39A)	Left Front Top Plate	OPEN	

Or / and

H9854M	010604048	Manual isolation valve (V325) inlet to expander EX8B (E37B)	Right Front Top Plate	OPEN	
H9858M	010604048	Manual isolation valve (V337) inlet to expander EX9B (E39B)	Right Rear Top Plate	OPEN	

H9913A	010604048	Actuated isolation valve (V318) on discharge side of expanders 9A/B	Top plate front, right	OPEN	

H9908A	010604048	cooldown Crossover valve (V382) to BC-6 connection from expanders 9A/B	Top plate front, right	CLOSED	

H3331A	010604071	Actuated control valve. Vapor return from Liquid helium storage dewar	On transfer line behind distribution valvebox PHPK	AUTO	

6.2.8.2 Valve lineup before cooldown of SRF GUN Cryostat / Valvebox or 5-CELL Cryostat / Valvebox

Valve line up before starting cooldown of SRF GUN/ VALVEBOX

Tag	Location P&ID	Description	Location	Position	Check
H1405A	010604041	Top fill valve	Top of SRFGUN cryostat	CLOSED	
H3342A	010604071	Vapor return control valve to 20 Torr Header from SRF Gun boil-off	On SRF GUN VALVEBOX	OPEN	
H1404A	010604041	Bottom fill valve	Top of SRFGUN cryostat	CLOSED	

Valve line up before starting cooldown of the 5-CELL cryostat / valvebox

Tag	Location P&ID	Description	Location	Position	Check
H3353A	010604071	Top fill valve	Top of 5-cell valvebox	CLOSE	
H3343A	010604071	Vapor return control valve to 20 Torr Header from SRF Gun boil-off	Top of 5-cell valvebox	OPEN manual 100%	
H3354A	010604071	Actuated control valve, Liquid helium supply to bottom fill 5 cell SRF cavity	On 5 cell VALVEBOX	CLOSE	
H10896A	010604071	20Torr Coldvapor Return valve for 5 cell	On transfer lines, west, near 5-cell cryostat	CLOSE	
H10922A	010604071	20 Torr Coldvapor return valve for 5 cell	On transfer lines, west, near 5-cell cryostat	CLOSE	

Return valves to 10 inch header to Kinney pumping system

H3324A	010604071	Actuated Helium Control Valve, Return vapor from ERL cryomodules to 20 Torr helium vacuum header	On transfer line coming from ERL VJR	OPEN	

6.2.8.3-a Cooldown of the main liquid helium line to the SRF cryomodules

Tag	Location P&ID	Description	Location	Position	Check
H3332A	010604071	Actuated control valve. Controls 4 atm Supply helium from plant to subcooler coils, to cryomodules	On transfer line behind distribution valvebox PHPK	CLOSED	
H9909A	010604048	Actuated Cross -over valve (V343)from HP JT loop to BC-5 /H9911A	Top plate front, left	OPEN	
H3329A	010604071	Actuated valve, isolates Subcooler subcooled supply to ERL cryomodules.	On distribution valvebox PHPK	OPEN	
H10947M	010604071	Isolation valve for helium shield and lead flows return from manifold to compressor LP return line	On manifold end for MKS mass flow controllers	OPEN	

6.2.8.3-b 5K Circuits of SRF GUN

Tag	Location P&ID	Description	Location	Position	Check
H3540E	010604071	Thermal mass flowcontroller valve, actuated. SRFGun End Flange 2	On manifold for MKS mass flow controllers	Setpoint to 0.02 g/s	
H3541E	010604071	Thermal mass flowcontroller valve, actuated. SRFGun End Flange 1	On manifold for MKS mass flow controllers	Setpoint to 0.02 g/s	
H3542E	010604071	Thermal mass flowcontroller valve, actuated. SRFGun FPC-2	On manifold for MKS mass flow controllers	Setpoint to 0.02 g/s	
H3543E	010604071	Thermal mass flowcontroller valve, actuated. SRFGun FPC-1	On manifold for MKS mass flow controllers	Setpoint to 0.02 g/s	
H3544E	010604071	Thermal mass flowcontroller valve, actuated. SRFGun solenoid	On manifold for MKS mass flow controllers	Setpoint to 0.02 g/s	

6.2.8.3-c 5K Circuits 5-CELL Cryostat

Tag	Location P&ID	Description	Location	Position	Check
H3536E	010604071	Thermal mass flowcontroller valve, actuated. 5-cell cavity 5K circuit FPC coupler	On manifold for MKS mass flow controllers	Setpoint to 0.02 g/s	
H3537E	010604071	Thermal mass flowcontroller valve, actuated. 5-cell cavity 5K circuit End Flange, FPC side	On manifold for MKS mass flow controllers	Setpoint to 0.02 g/s	
H3538E	010604071	Thermal mass flowcontroller valve, actuated. 5-cell cavity 5K circuit End Flange, Tuner side	On manifold for MKS mass flow controllers	Setpoint to 0.02 g/s	
H3539E	010604071	Thermal mass flowcontroller valve, actuated. 5-cell cavity 5K circuit Tuner	On manifold for MKS mass flow controllers	Setpoint to 0.02 g/s	

Table 6.2.8.4 Cooldown of the cavities and helium volumes: <u>Kinney pump startup</u>

Tag	P&ID Number	Description	Location	POSITION	Check
H3402M	010604015	Bypass valve, 3" around venturi meter FT4009H, to 3 inch header back to compressor suction	On piping near wall	OPEN	
H3403M	010604015	Isolation dump valve to atmosphere	On piping near wall	CLOSED	
H3404M	010604015	Isolation valve between Kinney pump and Sullair suction return line	On piping near wall	OPEN	
H10944A	010604015	Vacuum Control inlet valve before Kinney pump	On piping above Kinney skid	Control	

Pumpdown from 1 atm completed

H3402M	010604015	Bypass valve, 3" around venturi meter FT4009H, to 3 inch header back to compressor suction	On piping near wall	CLOSED	

Table 6.2.8.5-a Cooldown of 5-cell Cavity Cryostat and valvebox

Tag	Location P&ID	Description	Location	Position	Check
H3354A	010604071	Actuated control valve, Liquid helium supply to bottom fill 5 cell SRF cavity	On 5 cell VALVEBOX	Control	

Table 6.2.8.5-b Cooldown of 5-cell Cavity Cryostat and valvebox: 5K Circuits 5-CELL Cryostat

Tag	Location P&ID	Description	Location	Position	Check
H3536E	010604071	Thermal mass flowcontroller valve, actuated. 5-cell cavity 5K circuit FPC coupler	On manifold for MKS mass flow controllers	0.05 g/s setpoint	
H3537E	010604071	Thermal mass flowcontroller valve, actuated. 5-cell cavity 5K circuit End Flange, FPC side	On manifold for MKS mass flow controllers	0.05 g/s Setpoint	
H3538E	010604071	Thermal mass flowcontroller valve, actuated. 5-cell cavity 5K circuit End Flange, Tuner side	On manifold for MKS mass flow controllers	0.05 g/s Setpoint	
H3539E	010604071	Thermal mass flowcontroller valve, actuated. 5-cell cavity 5K circuit Tuner	On manifold for MKS mass flow controllers	0.05 g/s setpoint	

Table 6.2.8.5-c Cooldown of 5-cell Cavity Cryostat and valvebox:

H3343A	010604071	Vapor return control valve to 20 Torr Header from 5 cell cavity boil-off	On 5 cell VALVEBOX	Control	

Table 6.2.8.6-a Cool down of SRF GUN Cryostat and valve box

H1404A	010604041	Bottom fill valve	Top of SRFGUN cryostat	CLOSED	

Table 6.2.8.6-b Cooldown SRF GUN Cryostat and valve box: 5K Circuits of SRF GUN

Tag	Location P&ID	Description	Location	Position	Check
H3540E	010604071	Thermal mass flowcontroller valve, actuated. SRFGun End Flange 2	On manifold for MKS mass flow controllers	Setpoint to 0.05 g/s	
H3541E	010604071	Thermal mass flowcontroller valve, actuated. SRFGun End Flange 1	On manifold for MKS mass flow controllers	Setpoint to 0.05 g/s	
H3542E	010604071	Thermal mass flowcontroller valve, actuated. SRFGun FPC-2	On manifold for MKS mass flow controllers	Setpoint to 0.05 g/s	
H3543E	010604071	Thermal mass flowcontroller valve, actuated. SRFGun FPC-1	On manifold for MKS mass flow controllers	Setpoint to 0.05 g/s	
H3544E	010604071	Thermal mass flowcontroller valve, actuated. SRFGun solenoid	On manifold for MKS mass flow controllers	Setpoint to 0.02 g/s	

H3324A	010604071	Actuated Helium Control Valve, Return vapor from ERL cryomodules to 20 Torr helium vacuum header	On transfer line coming from ERL VJR	Control	

Table 6.2.9 Cold cathode cool down

Tag	P&ID Number	Description	Location	POSITION	Check
N3301M	010604071	Manual isolation valve, LN2 cathode cooling supply	SRFGUN Valvebox		
N3304M	010604088	Manual isolation valve, LN2 purge	SRF GUN Valvebox EDEN	CLOSE	
N3306M	010604088	Manual isolation valve, GN2 purge	SRF GUN Valvebox EDEN	CLOSE	
N3307A	010604088	Actuated Control valve, LN2 phase separator fill	SRF GUN Valvebox EDEN	UNLOTO & CLOSE Control	
N3310A	010604088	Actuated Control valve, LN2 pressure control	SRF GUN Valvebox EDEN	AUTO @ 5 psig	
N3345M	010604088	Manual isolation valve, cathode supply	On transfer line to cathode cart	OPEN	

Table 6.2.10.1 40 inch Vertical Test Dewar Operation: Cooldown and Operation
Valve line up check prior to cooldown

Tag	Location P&ID	Description	Location	Position	Check
H3335M	010604071	Manual Purge valve, on liquid supply line from LHE dewar to test dewar	On distribution valvebox PHPK	CLOSED	
H3321M	010604071	Manual Purge valve, on Vapor return line from 40 inch test dewar	On distribution valvebox PHPK	CLOSED	
H3328A	010604071	Actuated valve with hand wheel, isolates Subcooler subcooled supply to Test dewar.	On distribution valvebox PHPK	REMOVE LOTO CLOSED	
H3327A	010604071	Actuated control valve from Liquid helium draw from 1000 gal storage dewar to VTD supply	On distribution valvebox PHPK	REMOVE LOTO CLOSED	
H3320A	010604071	Low pressure return from 40" Vertical Test Dewar	Distribution Valve box	REMOVE LOTO CLOSE. This is a fail open valve, verify air is on	
H3322A	010604071	Liquid supply isolation to 40" VTD	Distribution Valve box	REMOVE LOTO CLOSE	
H3512A	CA6010001	Liquid fill valve into 40" VTD	40" Vertical Test Dewar	REMOVE LOTO CLOSE	
H3513A	CA6010001	Cooldown supply bottom valve into 40" VTD	40" Vertical Test Dewar	REMOVE LOTO CLOSE	
H3522M	CA6010001	Warm helium supply purge manual metering valve	40" Vertical Test Dewar	REMOVE LOTO CLOSE	
H3521A	CA6010001	Warm helium supply purge solenoid isolation valve	40" Vertical Test Dewar	CLOSED	
H3514M	CA6010001	Manual pump out port, for helium volume, isolation valve	40" Vertical Test Dewar	CLOSED	
N3315A	010604071	Liquid Nitrogen supply control valve thermal shield	Distribution VJR line to VTD	REMOVE LOTO CLOSE	
N3343M	CA6010001	External supply from bottle: manual metering valve, Nitrogen or helium or dry air	40" Vertical Test Dewar	REMOVE LOTO CLOSE	
N3342A	CA6010001	External supply from bottle solenoid isolation valve	40" Vertical Test Dewar	CLOSED	

Table 6.2.10.3 40 inch Vertical Test Dewar Operation: Kinney Pump Skid valve lineup

Tag	P&ID Number	Description	Location	POSITION	Check
H3402M	010604015	Bypass valve, 3" around venturi meter FT4009H, to 3 inch header back to compressor suction	On piping near wall	OPEN	
H3403M	010604015	Isolation dump valve to atmosphere	On piping near wall	CLOSED	
H3404M	010604015	Isolation valve between Kinney pump and Sullair suction return line	On piping near wall	OPEN	

Table 6.3.1-a Subcooler warm-up and shutdown

Tag	P&ID Number	Description	Location	POSITION	Check
H3330A	010604071	Subcooler bath fill valve. Actuated control valve from Liquid helium draw from 1000 gal storage dewar to subcooler fill line	On distribution valvebox PHPK	CLOSED	

Table 6.3.1-b Subcooler warm-up and shutdown

Tag	P&ID Number	Description	Location	POSITION	Check
H3327A	010604071	Actuated control valve from Liquid helium draw from 1000 gal storage dewar	On distribution valvebox PHPK	CLOSED LOTO [VTF]	
H3493M	010604034	Manual Isolation valve, on Dewar 1/2" T line, bottom liquid draw Lhe from dewar	Top of dewar, bayonet line	CLOSED	
H3330A	010604071	Actuated control valve from Liquid helium draw from 1000 gal storage dewar to subcooler fillvalve	On distribution valvebox PHPK	OPEN	
H3554M	010604071	Manual valve. Tap of 2” helium warm supply line from compressor to VTD	On 2” piping above subcooler	Throttle OPEN	
H3333M	010604071	Manual Purge valve, on liquid draw line from LHE dewar to valves H3327A and H3330A	On distribution valvebox PHPK	Throttle for purge	

Table 6.3.3. Cold cathode cooling loop warm-up and shutdown

Tag	P&ID Number	Description	Location	POSITION	Check
N3301M	010604071	Manual isolation valve, LN2 cathode cooling supply	SRFGUN Valvebox	CLOSE	
N3304M	010604088	Manual isolation valve, purge	SRF GUN Valvebox EDEN	CLOSE	
N3306M	010604088	Manual isolation valve, GN2 purge	SRF GUN Valvebox EDEN	CLOSE	
N3307A	010604088	Actuated Control valve, LN2 phase seperator fill	SRF GUN Valvebox EDEN	OPEN	
N3310A	010604088	Actuated Control valve, LN2 pressure control	SRF GUN Valvebox EDEN	CLOSE	
N3345M	010604088	Manual isolation valve, cathode supply	On transfer line to cathode cart	OPEN	
HTR-423	010604088	Heater for LN2 vaporization	SRF GUN Valvebox EDEN	OFF	

Table 6.3.4.1-a SRF Gun Cryostat/valvebox warm-up and shutdown

Tag	Location P&ID	Description	Location	Position	Check
H1405A	010604041	Top fill valve	Top of cryostat	CLOSED	
H3342A	010604071	Vapor return control valve to 20 Torr Header from SRF Gun boil-off	On SRF GUN VALVEBOX	OPEN	

Table 6.3.4.1-b SRF Gun Cryostat/valvebox warm-up and shutdown Warm up of the SRF GUN to room temperature

Tag	Location P&ID	Description	Location	Position	Check
H3353A	010604071	Actuated control valve, Liquid helium supply top fill reservoir volume for 5 CELL cavity	On 5 cell VALVEBOX	CLOSE	
H3354A	010604071	Actuated control valve, Liquid helium supply to bottom fill 5 CELL cavity	On 5 cell VALVEBOX	CLOSE	

Table 6.3.4.1-c SRF Gun Cryostat/valvebox warm-up and shutdown: Isolate and empty the 5-CELL cryostat

Tag	Location P&ID	Description	Location	Position	Check
H9909A	010604048	Actuated Cross -over valve (V343)from HP JT loop to BC-5 /H9911A	Top plate front, left	CLOSED	
H3332A	010604071	Actuated control valve. Controls 4 atm Supply helium from plant to subcooler coils, to cryomodules	On transfer line behind distribution valvebox PHPK	CLOSED	
H1405A	010604041	Top fill valve	Top of SRF-GUN cryostat	CLOSED	
H10975A	010604015	Vacuum bypass automatic valve for vacuum pump	On piping above Kinney skid	OPEN	
H10982M	010604015	Vacuum bypass isolation valve for vacuum pump	On piping above Kinney skid	OPEN	

Table 6.3.4.1-d SRF Gun Cryostat/valvebox warm-up and shutdown: 5K circuits

Tag	Location P&ID	Description	Location	Position	Check
H3540E	010604071	Thermal mass flowcontroller valve, actuated. SRFGun End Flange 2	On manifold for MKS mass flow controllers	Setpoint to 0.3 g/s	
H3541E	010604071	Thermal mass flowcontroller valve, actuated. SRFGun End Flange 1	On manifold for MKS mass flow controllers	Setpoint to 0.3 g/s	
H3542E	010604071	Thermal mass flowcontroller valve, actuated. SRFGun FPC-2	On manifold for MKS mass flow controllers	Setpoint to 0.3 g/s	
H3543E	010604071	Thermal mass flowcontroller valve, actuated. SRFGun FPC-1	On manifold for MKS mass flow controllers	Setpoint to 0.3 g/s	
H3544E	010604071	Thermal mass flowcontroller valve, actuated. SRFGun solenoid	On manifold for MKS mass flow controllers	Setpoint to 0.3 g/s	

5-CELL Cryostat/valvebox warm-up and shutdown

Table 6.3.5.1 5-CELL Cryostat/valvebox warm-up and shutdown: Empty liquid from 5-CELL cavity cryostat

Tag	Location P&ID	Description	Location	Position	Check
H3353A	010604071	Top fill valve	Top of 5-cell valvebox	CLOSE	
H3343A	010604071	Vapor return control valve to 20 Torr Header from SRF Gun boil-off	Top of 5-cell valvebox	OPEN manual 100%	
H3354A	010604071	Actuated control valve, Liquid helium supply to bottom fill 5 cell SRF cavity	On 5 cell VALVEBOX	CLOSE	

Table 6.3.5.2-a Table Isolate and empty the SRF-GUN cryostat

Tag	Location P&ID	Description	Location	Position	Check
H1405A	010604041	Top fill valve	Top of SRF-GUN cryostat	CLOSED	
H3342A	010604071	Vapor return control valve to 20 Torr Header from SRF Gun boil-off	On SRF-GUN VALVEBOX	OPEN 100%	

Table 6.3.5.2-b Table Isolate and empty the SRF-GUN cryostat

Tag	Location P&ID	Description	Location	Position	Check
H9909A	010604048	Actuated Cross -over valve (V343)from HP JT loop to BC-5 /H9911A	Top plate front, left	CLOSED	
H3332A	010604071	Actuated control valve. Controls 4 atm Supply helium from plant to subcooler coils, to cryomodules	On transfer line behind distribution valvebox PHPK	CLOSED	
H1405A	010604041	Top fill valve	Top of cryostat	CLOSED	

Table 6.3.5.2-c 5-CELL Cryostat/valvebox warm-up and shutdown:5K Circuits

Tag	Location P&ID	Description	Location	Position	Check
H3536E	010604071	Thermal mass flowcontroller valve, actuated. 5-cell cavity 5K circuit FPC coupler	On manifold for MKS mass flow controllers		
H3537E	010604071	Thermal mass flowcontroller valve, actuated. 5-cell cavity 5K circuit End Flange, FPC side	On manifold for MKS mass flow controllers		
H3538E	010604071	Thermal mass flowcontroller valve, actuated. 5-cell cavity 5K circuit End Flange, Tuner side	On manifold for MKS mass flow controllers		
H3539E	010604071	Thermal mass flowcontroller valve, actuated. 5-cell cavity 5K circuit Tuner	On manifold for MKS mass flow controllers		

Table 6.3.6 Kinney vacuum skid shutdown

Tag	Location P&ID	Description	Location	Position	Check
H10975A	010604015	Vacuum bypass valve for vacuum pump	On piping above Kinney skid	OPEN	
H10982M	010604015	Vacuum bypass isolation valve for vacuum pump	On piping above Kinney skid	OPEN	
H10944A	010604015	Vacuum Control inlet valve before Kinney pump	On piping above Kinney skid	CLOSE	
H10968M	010604015	Cross-over valve to FT4010H of Kinney skid discharge flow	On Kinney skid	CLOSE	

Table 6.3.7-a 1660 Plant shutdown

Tag	Location P&ID	Description	Location	Position	Check
H9903A	010604048	1660 Coldbox High pressure inlet solenoid actuated isolation valve N.C. H9903A (V323A)	Left rear corner of 1660 skid	CLOSE By controls	

Table 6.3.7-b 1660 Plant shutdown

H9853M	010604048	Manual isolation valve (V315) inlet to expander EX8A (E37A)	Left Rear Top Plate	CLOSE	
H9854M	010604048	Manual isolation valve (V325) inlet to expander EX8B (E37B)	Right Front Top Plate	CLOSE	
H9857M	010604048	Manual isolation valve (V317) inlet to expander EX9A (E39A)	Left Front Top Plate	CLOSE	
H9858M	010604048	Manual isolation valve (V337) inlet to expander EX9B (E39B)	Right Rear Top Plate	CLOSE	
Locking bars	010604048	Install flywheel l;okcing bars	Flywheels	LOCK	

Table 6.3.8.1-a 1000 Gallon Liquid helium dewar warmup and shutdown: Isolate the cavity cryomodules

Tag	Location P&ID	Description	Location	Position	Check
H10896A	010604071	20Torr Coldvapor Return valve for 5 cell	On transfer lines, west, near 5-cell cryostat	CLOSE	
H10922A	010604071	20 Torr Coldvapor return valve for 5 cell	On transfer lines, west, near 5-cell cryostat	CLOSE	
H3342A	010604071	Vapor return control valve to 20 Torr Header from SRF Gun boil-off	On SRF GUN VALVEBOX	CLOSE	
H3343A	010604071	Vapor return control valve to 20 Torr Header from 5 cell cavity boil-off	On 5 cell VALVEBOX	CLOSE	

Table 6.3.8.1-b <u>Valve line up to send helium boil-off from 1000 gal liquid helium dewar to 20 Torr ambient vaporizer</u>

Tag	Location P&ID	Description	Location	Position	Check
H3331A	010604071	Actuated control valve. Vapor return from Liquid helium storage dewar	On transfer line behind distribution valvebox PHPK	OPEN	
H9917A	010604048	Actuated Cross-over valve (V350) between Return bayonet line BC-2 and Cooldown return bypass line low side	Top plate front	OPEN	
H9919A	010604048	Actuated Cross-over valve (V352) between Return bayonet line BC-3 and Cooldown return bypass line low side	Top plate front	OPEN	
H3323A	010604071	Actuated Helium Valve, Return vapor from ERL cryomodules TO 4.5K cryoplant	On distribution valvebox PHPK	OPEN	
H3324A	010604071	Actuated Helium Control Valve, Return vapor from ERL cryomodules to 20 Torr helium vacuum header	On transfer line coming from ERL VJR	OPEN	
H10975A	010604015	Vacuum bypass valve for vacuum pump	On piping above Kinney skid	OPEN	
H10982M	010604015	Vacuum bypass isolation valve for vacuum pump	On piping above Kinney skid	OPEN	
H10866C	010604015	Vacuum bypass check valve for vacuum pump	On piping above Kinney skid		
H10973M	010604015	System isolation downstream of venturi mass flow meters FI4010H,FI4009H through Kinney pump skid	On Kinney skid	OPEN	
H3404M	010604015	Isolation valve between Kinney pump and Sullair suction return line	On piping near wall	OPEN	

ATTACHMENT B Valve & Instrument List, Description/Location Table

B.1 Sub-atmospheric Pumping System Kinney vacuum skid

Tag	P&ID Number	Description	Location	FAIL POSITION	Check
H3400M	010604015	Crossover isolation valve for Upstream pressure measurement of FT4009H venturi using PI8464H	On piping near wall		
H3401M	010604015	Crossover isolation valve for Upstream pressure measurement of FT4010H venturi using PI8464H	On piping near wall		
H3402M	010604015	Bypass valve, 3" around venturi meter FT4009H, to 3 inch header back to compressor suction	On piping near wall		
H3403M	010604015	Isolation dump valve to atmosphere	On piping near wall		
H3404M	010604015	Isolation valve between Kinney pump and Sullair suction return line	On piping near wall		
H3405M	010604015	Isolation valve (V10A) from gas supply line to Kinney pump attenuation port from oil demister discharge side	On Kinney skid		
H3406M	010604015	Isolation valve (V4) donwstream of hi to low bypass control valve V-3 (H3407E)			
H3407E	010604015	Hi (Kinney discharge side) to low (blower suction side) bypass control valve V-3 (H3407E)	On Kinney skid		
H3408M	010604015	Isolation valve (V2) upstream of hi to low bypass control valve V-3 (H3407E)	On Kinney skid		
H3409M	010604015	Needle valve (V9A) for attentuation gas supply line to Kinney Liquid pump chamber from oil demister discharge side	On Kinney skid		
H3410C	010604015	Check valve gas supply line to Kinney Liquid pump attentuation port from oil demister discharge side	On Kinney skid		
H3411R	010604015	Anti-cavitation valve (VSV-1A) flow from Liquid ring discharge to Liquid ring suction side	On Kinney skid		
H3412M	010604015	Manual globe valve between oil supply from internal line to mech shaft seal 2nd stage	On Kinney skid		
H3413M	010604015	Manual valve Oil make up supply from external source	On Kinney skid		
H3414C	010604015	Check Valve, N-1A, suction check on liquid ring pump 1A	On Kinney skid		
H3415A	010604015	Actuated Isolation valve, Suction to liquid ring pump 1A	On Kinney skid	F.C.	
H3416M	010604015	Isolation valve for PT3331H interstage pressure	On Kinney skid		
H3417M	010604015	Isolation valve supply oil from oil	On Kinney skid		

		cooler to mech seal into 1st stage liquid ring 1A			
H3418M	010604015	Isolation of main oil supply line to Liquid Ring feed 1A	On Kinney skid		
H3419C	010604015	Check Valve, remainING oil from oil pump 1A, to booster loop /booster oil	On Kinney skid		
H3420C	010604015	Check Valve, remainING oil from oil pump 1B, to booster loop /booster oil	On Kinney skid		
H3421M	010604015	Isolation valve (V10B) from gas supply line to Kinney pump attenuation port from oil demister discharge side	On Kinney skid		
H3422M	010604015	Manual globe valve between oil supply from internal line to mech shaft seal 2nd stage	On Kinney skid		
H3423A	010604015	Isolation of main oil pump supply line to Liquid Ring feed 1B	On Kinney skid	F.C.	
H3424M	010604015	Isolation valve supply oil from oil cooler to mech seal into 1st stage liquid ring 1B	On Kinney skid		
H3425M	010604015	Needle valve (V9B) for attentuation gas supply line to Kinney Liquid pump chamber from oil demister discharge side	On Kinney skid		
H3426C	010604015	Check valve gas supply line to Kinney Liquid pump attentuation port from oil demister discharge side	On Kinney skid		
H3427M	010604015	Manual Oil drain valve on Oil Tank 1A	On Kinney skid		
H3428S	010604015	Solenoid actuated Cooling water isolation valve supply to oil cooler HX_1A	On Kinney skid		
H3429M	010604015	Manual valve Oil make up supply from external source	On Kinney skid		
H3430M	010604015	Manual Oil drain valve on Oil Tank 1B	On Kinney skid		
H3431S	010604015	Solenoid actuated Cooling water isolation valve supply to oil cooler HX_1B	On Kinney skid		
H3432S	010604015	Solenoid actuated Cooling water isolation valve, V-17A supply to oil cooler Blower end gear side1	On Kinney skid		
H3433S	010604015	Solenoid actuated Cooling water isolation valve, V-18A supply to oil cooler Blower end gear side2	On Kinney skid		
H3434S	010604015	Solenoid actuated isolation valve V-15 for oil injection cooling flow to Blower suction side	On Kinney skid		

H3435M	010604015	Manual isolation valve V-14 downstream of flow rotameter FI3300H, oil injection flow into blower	On Kinney skid		
H3436M	010604015	Manual isolation valve V-13 upstream of flow rotameter FI3300H, oil injection flow into blower	On Kinney skid		
H3437A	010604015	Actuated Isolation valve, Suction to liquid ring pump 1B	On Kinney skid	F.C.	
H3438C	010604015	Check Valve, N-1B, suction check on liquid ring pump 1B	On Kinney skid		
H3439S	010604015	Solenoid actuated isolation valve V-16 for blower injection oil oil cooler heatexchanger water flow loop	On Kinney skid		
H3440R	010604015	Anti-cavitation valve (VSV-1B) flow from Liquid ring 1B discharge to Liquid ring 1B suction side	On Kinney skid		
H3442M	010604015	Dump valve to atmosphere from Kinney discharge line	On piping near wall		
H3443M	010604015	Dump valve to atmosphere from Kinney discharge line	On piping near wall		
H10986R	010604015	Relief valve, Kinney skid discharge line, 5 psig	On piping above Kinney skid		
H10973M	010604015	System isolation downstream of venturi mass flow meters FI4010H,FI4009H through Kinney pump skid	On Kinney skid		
H10968M	010604015	Cross-over valve to FT4010H of Kinney skid discharge flow	On Kinney skid		
H10944A	010604015	Vacuum Control inlet valve before Kinney pump	On piping above Kinney skid	F.C.	
H10975A	010604015	Vacuum bypass valve for vacuum pump	On piping above Kinney skid	F.C.	
H10982M	010604015	Vacuum bypass isolation valve for vacuum pump	On piping above Kinney skid		
H10866C	010604015	Vacuum bypass check valve for vacuum pump	On piping above Kinney skid		
H10969M	010604015	Vacuum pump out let bypass	On piping above Kinney skid		
H10890M	010604015	Vacuum pump outlet flow meter isolation valve	On piping above Kinney skid		
H10984M	010604015	Vacuum pump out let bypass	On piping above Kinney skid		
H10868C	010604015	Vacuum pump outlet check valve	On piping above Kinney skid		
H10971H	010604015	Vacuum outlet atmospheric vent	On piping above Kinney skid		
H10972H	010604015	Vacuum pump out let bypass	On piping above Kinney skid		

FI3300H	010604015	Local flow indicator for oil jection loop to blower suction side	On Kinney skid		
FE3301H	010604015	Oil flow to liquid ring vacuum pump KLRC-525a	On Kinney skid		
FE3302H	010604015	Oil flow to liquid ring vacuum pump KLRC-525b	On Kinney skid		
HX3302	010604015	Heat exchanger, Oil cooler: Water /Oil, Roots blower	On Kinney skid		
HX3303	010604015	Heat exchanger, Oil cooler: Water /Oil, Liquid Ring	On Kinney skid		
HX3304	010604015	Heat exchanger, Oil cooler: Water /Oil, Liquid Ring	On Kinney skid		
LI3309	010604015	Oil liquid level visual column indicator Oil tank A Kinney liquid ring pump A	On Kinney skid		
LI3310	010604015	Sight glass window Low point on oil tank A	On Kinney skid		
LI3311	010604015	Oil liquid level visual column indicator Oil tank B Kinney liquid ring pump B	On Kinney skid		
LI3312	010604015	Sight glass window Low point on oil tank B	On Kinney skid		
LSL3300	010604015	Low liquid level Switch for oil tank A on Kinney pump skid	On Kinney skid		
LSL3301	010604015	Low liquid level Switch for oil tank A on Kinney pump skid	On Kinney skid		
M3300	010604015	A Liquid ring vacuum pump motor	On Kinney skid		
M3301	010604015	Booster motor	On Kinney skid		
M3302	010604015	B Liquid ring vacuum pump motor	On Kinney skid		
PI3306H	010604015	Pressure indicator, local dial gage, Helium suction side of liquid ring pump 1A	On Kinney skid		
PI3307H	010604015	Pressure indicator, local dial gage, Oil pressure main oil injection port of liqiud ring pump 1A	On Kinney skid		
PI3308H	010604015	Pressure indicator, local dial gage, Oil pressure main oil injection port of liqiud ring pump 1B	On Kinney skid		
PI3309H	010604015	Pressure indicator, local dial gage, Discharge pressure Kinney pump 1A Oil tank/separator outlet	On Kinney skid		
PI3310H	010604015	Pressure indicator, local dial gage, Discharge pressure Kinney pump 1B Oil tank/separator outlet	On Kinney skid		
PI3311H	010604015	Pressure indicator, local dial gage, Discharge pressure Downstream of oil demister vessel on main discharge line tee-off	On Kinney skid		
PI3312H	010604015	Pressure indicator, local dial gage, Helium suction side of liquid ring pump 1B	On Kinney skid		

PT8455H (PT3307H)	010604015	Vacuum skid suction side pressure upstream of butterfly valve	On piping above Kinney skid		
PT3308H	010604015	50Torr Range pressure transmitter, suction pressure blower	On piping above Kinney skid		
PT3309H	010604015	Line pressure sensor for Kinney pump	On piping above Kinney skid		
PT3331H	010604015	Kinney liquid ring suction pressure /booster discharge pressure	On Kinney skid		
FT4010H	010604015	Vacuum Outlet flow meter, Low flow	On piping above Kinney skid		
FT4009H	010604015	Vacuum Outlet flow meter, High flow	On piping above Kinney skid		
PI8464H	010604015	Vacuum pump outlet pressure	On piping above Kinney skid		
TT1098H	010604015	Vacuum pump outlet temperature	On piping above Kinney skid		
TI3300H	010604015	Local dial Temperature indicator, oil temperature, outlet flow oil cooler for pump A, Kinney vacuum pump skid	On Kinney skid		
TI3301H	010604015	Local dial Temperature indicator, oil temperature, outlet flow oil cooler for pump B, Kinney vacuum pump skid	On Kinney skid		
TI3302H	010604015	Local dial Temperature indicator, oil temperature, inlet flow oil cooler for pump A, Kinney vacuum pump skid	On Kinney skid		
TI3303H	010604015	Local dial Temperature indicator, oil temperature, inlet flow oil cooler for pump B Kinney vacuum pump skid	On Kinney skid		
TS3300H	010604015	Temperature switch, Low helium inlet temperature to roots blower suction	On Kinney skid		
TS3301H	010604015	Temperature switch, High helium outlet temperature from roots blower discharge	On Kinney skid		
TSH3300	010604015	Temperature switch High, High oil temperature switch interlock of discharge of liquid ring pump in oil tank A	On Kinney skid		
TSH3301	010604015	Temperature switch High, High oil temperature switch interlock of discharge of liquid ring pump in oil tank B	On Kinney skid		

B.2 11,000 Gallon LN2 STORAGE DEWAR Valve & Instrument List

Tag	P&ID Number	Description	Location	FAIL POSITION	Check
N3300R	010604031	Relief valve, Nitrogen 65 PSIG	Below LN2 dewar		
N3313M	010604031	Manual isolation valve, full try cock	Below LN2 dewar		
N3316M	010604031	Manual isolation valve, LN2 top fill	Below LN2 dewar		
N3317M	010604031	Manual isolation valve, blow down	Below LN2 dewar		
N3318M	010604031	Manual isolation valve, LN2 bottom fill	Below LN2 dewar		
N3320M	010604031	Manual isolation valve, LN2 local level gauge	Below LN2 dewar		
N3321M	010604031	Manual isolation valve, LN2 local level gauge	Below LN2 dewar		
N3322M	010604031	Manual isolation valve, LN2 upstream of exchanger	Below LN2 dewar		
N3323A	010604031	mechanical regulator Control valve, pressure building control loop	Below LN2 dewar	Mech regulator	
N3324M	010604031	Manual isolation valve, LN2 fill	Below LN2 dewar		
N3325R	010604031	Relief valve, Nitrogen 100 PSIG	Below LN2 dewar		
N3327R	010604031	Relief valve, Nitrogen regulator relief	Below LN2 dewar		
N3329M	010604031	Manual isolation valve, LN2 purge	Below LN2 dewar		
N3332M	010604031	Manual isolation valve, LN2 purge	Below LN2 dewar		
N3333A	010604031	mechanical regulator Control valve, economizer pressure building regulator	Below LN2 dewar	Mech regulator	
N3334M	010604031	Manual isolation valve, LN2 supply end user	Below LN2 dewar		
N3348M	010604031	isolation valve for PT and DPT	Below LN2 dewar		
N3349M	010604031	DPT bypass Valve	Below LN2 dewar		
N3350M	010604031	isolation valve for DPT	Below LN2 dewar		
N3354A	010604031	Automatic isolation valve LN2 main dewar	Below LN2 dewar	CLOSED	
N3355R	010604031	Trapped volume relief	Below LN2 dewar		
N6243M	010604031	isolation valve for DPT	Below LN2 dewar		
N6242M	010604031	isolation valve for PT and DPT	Below LN2 dewar		
N4916M	010604031	Isolation valve for PG	Below LN2 dewar		

N6241R	010604031	Trap volume relief	Below LN2 dewar		
N6240R	010604031	Trap volume relief	Below LN2 dewar		
N6244M	010604031	Nitrogen Purge line	Below LN2 dewar		
PG3600N	010604031	Nitrogen Fill pressure gauge	Below LN2 dewar		
BD2527N	010604031	LN2 STORAGE 11,000 GAL (N3321R)	Below LN2 dewar		
DPT3308N	010604031	Differential pressure for liquid nitrogen tank	Below LN2 dewar		
LLG3300N	010604031	Manual mechanical liquid level gage	In front of LN2 dewar		
PT3305N	010604031	Liquid nitrogen pressure	In front of LN2 dewar		

B.3 SULLAIR Compressor skid Valve & Instrument List

Tag	P&ID Number	Description	Location	FAIL POSITION	Check
H3500R	010604032	Relief valve compressor discharge	On Sullair skid		
H3501M	010604032	Manual dump /purge vent valve on compressor discharge side	On Sullair skid		
H3502M	010604032	Blowdown valve, manual valve, bulk oil separator on compressor skid	On Sullair skid		
H3503C	010604032	Check valve, compressor discharge side down stream of bulk oil separator	On Sullair skid		
H3504C	010604032	Check valve compressor suction	On Sullair skid		
H3506M	010604032	Compressor outlet valve	On Sullair skid		
H3505M	010604032	isolation valve, instrument	On Sullair skid		
E3300M	010604032	Bulk Oil seperator drain	On Sullair skid		
E3301M	010604032	Oil Strain inlet isolation	On Sullair skid		
E3302M	010604032	Oil Strain outlet isolation	On Sullair skid		
E3303C	010604032	Oil injection-female rotor check valve	On Sullair skid		
E3304C	010604032	Oil pump outlet check valve	On Sullair skid		
E3305R	010604032	Oil Pressure relief valve	On Sullair skid		
E3306M	010604032	Oil filter 3-way stop valve	On Sullair skid		
E3307M	010604032	Oil filter pressure sensor isolation valve	On Sullair skid		
E3308M	010604032	Oil filter Drain	On Sullair skid		
E3309C	010604032	Oil filter check valve	On Sullair skid		
E3310C	010604032	Oil filter check valve	On Sullair skid		
E3311M	010604032	Oil filter pressure sensor isolation valve	On Sullair skid		
E3312M	010604032	Oil filter Drain	On Sullair skid		
E3313A	010604032	Oil pressure regulator 3-way valve	Mech regulator		
E3314A	010604032	Pressure indicator selector 3-way valve	Mech regulator		
E3600C	010604032	Oil injection-male rotor check valve	On Sullair skid		
E3315M	010604032	PI ISOLATION VALVE ON Sullair	On Sullair skid		
W3301A	010604032	Cooling water in to oil cooler	F.C.		
W0100M	010604032	Inlet tap	On water line above compressor		
W0101M	010604032	Oulet Tap	On water line above compressor		
W0102M	010604032	Water outlet	On water line above compressor		
W0103M	010604032	Oil cooler Valve bypass	On water line above compressor		
W0104M	010604032	Water Inlet	On water line		

			above compressor		
HZS3301	010604032	Compressor Load button hand switch	On Sullair skid panel		
HTR-3305	010604032	Oil heater bulk oil separator main compressor skid			
M0001	010604032	Helium compressor motor			
ZI3301	010604032	position indicator for compressor load valve	On Sullair skid		
ZY3301	010604032	Output signal to compressor load slide valve actuator	On Sullair skid		
ZSH3301	010604032	Position switch limit, full loaded compressor slide valve	On Sullair skid		
ZSL3301	010604032	Position switch limit, full unloaded compressor slide valve	On Sullair skid		
PI3317H	010604032	Sullair Compressor discharge pressure	On Sullair skid		
PI3318E	010604032	Sullair oil filter inlet pressure	On Sullair skid		
PSH3306H	010604032	Compressor discharge high pressure switch	On Sullair skid panel		
PSL3305H	010604032	Sullair compressor suction side low pressure switch	On Sullair skid panel		
PSL3307H	010604032	Sullair compressor oil low pressure switch	On Sullair skid panel		
PT3319H	010604032	Sullair Compressor Discharge pressure	On Sullair skid panel		
TI3307E	010604032	Sullair Compressor oil manifold temperature indicator	On Sullair skid		
TI3308H	010604032	Sullair Compressor outlet aftercooled helium temperature indicator	On Sullair skid		
TSH3304E	010604032	Sullair compressor high oil temperature switch	On Sullair skid panel		
TSH3305E	010604032	Oil separator heater high temperature switch	On Sullair skid		
TSH3306H	010604032	Sullair compressor Discharge high temperature switch	On Sullair skid panel		
TT3322H	010604032	Sullair Compressor discharge temperature	On Sullair skid		
TT3323H	010604032	Sullair Compressor aftercooler temperature	On Sullair skid		

B.4 1000 Gallon Liquid Helium Dewar Valve & Instrument List

Tag	P&ID Number	Description	Location	FAIL POSITION	Check
H3490M	010604034	Manual Isolation valve, on Dewar 1/2" T line, bottom feed coming Lhe from 1660 JT valve	Top of dewar, bayonet line		
H3491M	010604034	Manual Isolation valve, on Dewar 3/4" T line, 2-phase feed coming Wet expander into dewar	Top of dewar, bayonet line		
H3492M	010604034	Manual Isolation valve, on Dewar 3/4" T line, vapor return to 1660 low pressure return	Top of dewar, bayonet line		
H3493M	010604034	Manual Isolation valve, on Dewar 1/2" T line, bottom liquid draw Lhe from dewar	Top of dewar, bayonet line		
H3494R	010604034	Relief valve, 1000 Gal dewar, 40 psig	Top of dewar		
H3496M	010604034	Manual Isolation valve, Hi side, Liquid level head DP sensor LI 3314H	Top of dewar		
H3497M	010604034	Manual Isolation valve, exit vent for vapor cooled shield / neck intercept bleedflow	Top of dewar		
H3498M	010604034	Manual Isolation valve,Lo side, Liquid level head DP sensor LI 3314H	Top of dewar		
H4911M	010604034	Pump and purge / shut down check, top side, isolation valve, vapor space	Top of dewar		
H3499M	010604034	Manual Isolation valve vapor side return during cooldown of dewar back to compressor suction	Top of dewar		
V3304M	010604034	Bleed up valve for insulating vacuum space liquid helium dewar	Top of dewar		
V3306M	010604034	isolation valve for vacuum gage	Top of dewar		
V3307R	010604034	Relief device, 2 inch, insulating vacuum space	Top of dewar		
BD2526H	010604034	1000 GAL LHE DEWAR (H3495R)	Top of dewar		
FIC3304H	010604034	Rotometer Flow indicator of vapor cooled shield flow with manual metering valve	Front panel dewar		
EHTR-1	010604034	Boil-off heater in dewar	Front panel dewar		
LI3313H	010604034	Liquid level sensor for Lhe dewar, Superconducting probe	Top of dewar		
LI3314H	010604034	Liquid level sensor for Lhe Dewar, local DP level gage	Front panel dewar		
LT3313H	010604034	Liquid Helium Storage Dewar level Probe	Top of dewar		
PI3314H	010604034	Pressure indicator, local dial gage, liquid helium storage dewar pressure	Front panel dewar		
PT3313H	010604034	30 psia pressure sensor, Liquid helium dewar	Front panel dewar		
PT3315V	010604034	Vacuum gage, thermocouple DV-5?	Front panel dewar		

B.5 Oil Removal System Valve & Instrument List

Tag	P&ID Number	Description	Location	FAIL POSITION	Check
H3306M	010604035	isolation valve between 4th stage coalescers and carbon adsorber bed inlet	On oil removal piping	MANUAL	
H3314M	010604035	manual Isolation valve dp indicator DPI 3300	On oil removal piping		
H3315M	010604035	Manual Isolation valve dp indicator DPI 3300	On oil removal piping		
H3319M	010604035	Manual Isolation valve oil level sight glass indicator LI 3300, top	On oil removal piping		
H3357M	010604035	Isolation valve dp indicator DPI 3301	On oil removal piping		
H3358M	010604035	Isolation valve dp indicator DPI 3301	On oil removal piping		
H3359M	010604035	Isolation valve oil level sight glass indicator LI 3301, top	On oil removal piping		
H3394M	010604035	Bypass valve, Oil Float drainer, stage 2-A, BX	On oil removal piping		
H3395M	010604035	Isolation valve oil level sight glass indicator LI 3300, bottom	On oil removal piping		
H3396M	010604035	Bypass valve, Oil Float drainer, stage 1-A, DX	On oil removal piping		
H3397M	010604035	Isolation valve oil level sight glass indicator LI 3301, bottom	On oil removal piping		
H3398M	010604035	Isolation valve oil level sight glass indicator LI 3302, top	On oil removal piping		
H3399M	010604035	Isolation valve dp indicator DPI 3302, HI side	On oil removal piping		
H3444M	010604035	Isolation valve dp indicator DPI 3302, Lo side	On oil removal piping		
H3445M	010604035	Isolation valve oil level sight glass indicator LI 3302, bottom	On oil removal piping		
H3446M	010604035	Bypass valve, Oil Float drainer, stage 1-B, DX	On oil removal piping		
H3447M	010604035	Isolation valve oil level sight glass indicator LI 3303, top	On oil removal piping		
H3448M	010604035	Isolation valve dp indicator DPI 3303	On oil removal piping		
H3449M	010604035	Isolation valve dp indicator DPI 3303	On oil removal piping		
H3450M	010604035	Isolation valve oil level sight glass indicator LI 3303, bottom	On oil removal piping		
H3451M	010604035	Bypass valve, Oil Float drainer, stage 2-B, BX	On oil removal piping		
H3452M	010604035	Isolation valve oil level sight glass indicator LI 3304, top	On oil removal piping		
H3453M	010604035	Isolation valve oil level sight glass indicator LI 3304, bottom	On oil removal piping		
H3457M	010604035	Drain Return valve, stage 3-A, BX	On oil removal		

			piping		
H3460M	010604035	Isolation valve oil level sight glass indicator LI 3305, top	On oil removal piping		
H3461M	010604035	Isolation valve oil level sight glass indicator LI 3305, bottom	On oil removal piping		
H3463M	010604035	Drain Return valve, stage 4-A, BX	On oil removal piping		
H3465M	010604035	Isolation valve oil level sight glass indicator LI 3306, top	On oil removal piping		
H3466M	010604035	Isolation valve oil level sight glass indicator LI 3306, bottom	On oil removal piping		
H3469M	010604035	Drain Return valve, stage 3-B, BX	On oil removal coalesce piping		
H3471M	010604035	Isolation valve oil level sight glass indicator LI 3307, top	On oil removal piping		
H3472M	010604035	Isolation valve oil level sight glass indicator LI 3307, bottom	On oil removal piping		
H3475M	010604035	Drain Return valve, stage 4-B, BX	On oil removal piping		
H3476M	010604035	Purge Valve, Inlet side Oil removal charcoal bed	On charcoal absorber bed		
H3477M	010604035	Regen gas supply isolation valve	On charcoal absorber bed		
H3478M	010604035	Isolation valve, Bed Particulate Guard filter outlet side	On particulate filter		
H3479M	010604035	Gas Sample needle valve, Bed Particulate Guard filter outlet side	On particulate filter		
H3480M	010604035	Purge valve, Bed Particulate Guard filter outlet side	On particulate filter		
H3481M	010604035	Bleed Valve, Inlet side Oil removal charcoal bed	On charcoal absorber bed		
DPI3300	010604035	Differential pressure sensor to measure pressure drop across coalescing filter CLS-002A	On oil removal coalesce piping		
DPI3301	010604035	Differential pressure sensor to measure pressure drop across coalescing filter CLS-001A	On oil removal coalesce piping		
DPI3302	010604035	Differential pressure sensor to measure pressure drop across coalescing filter CLS-001B	On oil removal coalesce piping		
DPI3303	010604035	Differential pressure sensor to measure pressure drop across coalescing filter CLS-002B	On oil removal coalesce piping		
LI3300	010604035	Visual oil level sight glass indicator, coalescer CLS-002A	On oil removal coalesce piping		
LI3301	010604035	Visual oil level sight glass indicator, coalescer CLS-001A	On oil removal coalesce piping		
LI3302	010604035	Visual oil level sight glass indicator, coalescer CLS-001B	On oil removal coalesce piping		
LI3303	010604035	Visual oil level sight glass indicator, coalescer CLS-002B	On oil removal coalesce piping		

LI3304	010604035	Visual oil level sight glass indicator, coalescer CLS-003A	On oil removal coalesce piping		
LI3305	010604035	Visual oil level sight glass indicator, coalescer CLS-004A	On oil removal coalesce piping		
LI3306	010604035	Visual oil level sight glass indicator, coalescer CLS-003B	On oil removal coalesce piping		
LI3307	010604035	Visual oil level sight glass indicator, coalescer CLS-004B	On oil removal coalesce piping		

B.6 Gas Storage Tank Valve & Instrument List

Tag	P&ID Number	Description	Location	FAIL POSITION	Check
H3482R	010604039	Relief valve, Helium gas storage tank 45,000 gallon	Below gas tank		
H3483M	010604039	Isolation valve for PT3306H	Below gas tank		
H3484M	010604039	Isolation valve to gas storage tank	Below gas tank		
H3485M	010604039	PUMPOUT AND DUMP VALVE	Below gas tank		
PG3300H	010604039	Warm Gas storage tank Pressure	Below gas tank		
PI3305H	010604039	Pressure Indicator for Helium gas buffer tank	Below gas tank		
PT3306H	010604039	Pressure for Helium gas buffer tank	Inside compressor /pump room		

B.7 SRF GUN CRYOSTAT Large rectangular blue cryostat Valve & Instrument List

Tag	P&ID Number	Description	Location	FAIL POSITION	Check
H3346M	*010604041*	*Manual isolation valve for burst disk, tack welded open. vacuum beam tube cathode side.*	*Beam line*		
H3347M	*010604041*	*Manual isolation valve for burst disk, tack welded open. vacuum beam tube beam exit side.*	*Beam line*		
H3535A	010604041	Equalization valve between liquid line and vapor return line	Top of cryostat	F.C.	
H1404A	010604041	Bottom fill valve	Top of cryostat	F.C.	
H1405A	010604041	Top fill valve	Top of cryostat	F.C.	
H1401R	010604041	Relief valve, 5 psig	Top of cryostat on piping		
H1406C	010604041	Check valve, 0.5 psig	Top of cryostat on piping		
H1407M	010604041	Instrument valve for PT1402H	Top of cryostat on piping		
H1408M	010604041	Instrument valve for PT1400H	Top of cryostat on piping		
H1409M	010604041	Purge valve	Top of cryostat on piping		
BD2521V	010604041	Burst disk 6" srf gun vacuum vessel (V404R)	Side of cryostat		
BD2522H	010604041	Burst disk 3” srf gun helium volume (H1400R)	Top of cryostat on piping		
BD0102	010604041	Beam tube UHV side burst disk	Beam line, cathode side		
BD0103	010604041	Beam tube UHV side burst disk, beam exit side	Beam line, beam exit side		
HTR-400	010604041	Boil-off heater in SRF Gun Cavity helium vessel	Bottom of cavity helium vessel		
HTR-411	010604041	5K intercept Circuit Return cold gas heater, Gun cryostat, CATHODE SIDE "Upstream" FLANGE INTERCEPT FLOW	On ½” return line, top of cryostat		
HTR-412	010604041	5K intercept Circuit Return cold gas heater, Gun cryostat, FPC SIDE "Downstream" FLANGE	On ½” return line, top of cryostat		
HTR-413	010604041	5K intercept Circuit Return cold gas heater, Gun cryostat, SOLENOID INTERCEPT	On ½” return line, top of cryostat		
HTR-414	010604041	5K intercept Circuit Return cold gas heater, Gun cryostat, FPC#2 INTERCEPT	On ½” return line, top of cryostat		
HTR-415	010604041	5K intercept Circuit Return cold gas heater, Gun cryostat, FPC#1 INTERCEPT	On ½” return line, top of cryostat		
HTR-408	010604041	FPC window heater #1, SRF Gun CAVITY	On FPC window		

HTR-409	010604041	FPC window heater #2, SRF Gun CAVITY	On FPC window		
LE400H A/B	010604041	Liquid helium level , SRF Gun reservoir	Inside helium reservoir		
TT3327	010604041	5K circuit heater outlet temperature control, SRF GUN, Cathode Side "upstream" Flange	On ½" return line, top of cryostat		
TT3328	010604041	5K circuit heater outlet temperature control, SRF GUN, FPC side "Downstream" Flange	On ½" return line, top of cryostat		
TT3329	010604041	5K circuit heater outlet temperature control, SRF GUN, Solenoid	On ½" return line, top of cryostat		
TT3330	010604041	5K circuit heater outlet temperature control, SRF GUN, FPC#2	On ½" return line, top of cryostat		
TT3331	010604041	5K circuit heater outlet temperature control, SRF GUN, FPC#1	On ½" return line, top of cryostat		
TT3332	010604041	5K circuit heater SHEET OVERTEMP SRF GUN, Cathode Side "upstream" Flange	On ½" return line, top of cryostat		
TT3333	010604041	5K circuit heater SHEET OVERTEMP SRF GUN, FPC side "Downstream" Flange	On ½" return line, top of cryostat		
TT3334	010604041	5K circuit heater SHEET OVERTEMP SRF GUN, Solenoid	On ½" return line, top of cryostat		
TT3335	010604041	5K circuit heater SHEET OVERTEMP SRF GUN, FPC#2	On ½" return line, top of cryostat		
TT3336	010604041	5K circuit heater SHEET OVERTEMP SRF GUN, FPC#1	On ½" return line, top of cryostat		
PT1400H	010604041	Pressure transmitter 50 Torr Range, SRF Gun helium bath pressure	Top of cryostat		
PT1401H	010604041	Pressure transmitter 30 psia Range, SRF Gun helium bath pressure	Top of cryostat		
PT1402H	010604041	Pressure transmitter 30 psia Range for secondary helium vessel relief	Top of cryostat on piping		
TE400H	010604041	Temperature sensor End flange tuner side	Inside cryostat		
TE401H	010604041	Temperature sensor Top side Liquid reservoir	Inside cryostat		
TE402H	010604041	Temperature sensor Bot side Liquid reservoir	Inside cryostat		
TE403N	010604041	Temperature sensor, Nitrogen shield, reservoir section	Inside cryostat		
TE404N	010604041	Temperature sensor, Nitrogen shield, lower section cavity	Inside cryostat		
TE405H	010604041	Temperature sensor on HTS solenoid heat station lead#2	Inside cryostat		
TE406H	010604041	Temperature sensor on HTS solenoid heat station lead#1	Inside cryostat		
TE407H	010604041	Temperature sensor tuner top	Inside cryostat		
TE408H	010604041	Temperature sensor tuner bot	Inside cryostat		
TE409H	010604041	Upper Cavity Temperature sensor	Inside cryostat		
TE410H	010604041	Lower Cavity Temperature sensor	Inside cryostat		

TE411H	010604041	FPC flange 2 temperature	Inside cryostat		
TE412H	010604041	FPC flange 1 temperature	Inside cryostat		
TE413H	010604041	Beam tube flange temperature	Inside cryostat		
TE414H	010604041	FPC outer conductor temperature	Inside cryostat		
TE415H	010604041	FPC outer conductor temperature	Inside cryostat		
TS1401H	010604041	Relief heater temperature switch			
TE426H	010604041	FPC window Temperature for heater	Inside cryostat		
TE427H	010604041	FPC window Temperature for heater	Inside cryostat		
TE430H	010604041	HTS solenoid coil, lower right	Inside cryostat		
TE431H	010604041	HTS solenoid coil, lower left	Inside cryostat		
TE432H	010604041	HTS solenoid coil, upper right	Inside cryostat		
TE433H	010604041	HTS solenoid coil, upper left	Inside cryostat		

B.8 SCRF 5-CELL CRYOSTAT Valve & Instrument List

Tag	P&ID Number	Description	Location	FAIL POSITION	Check
H3350M	010604046	Isolation valve for burst disk BD0100			
H3352M	010604046	Isolation valve for burst disk BD0101			
BD0101	010604046	Helium vessel relief for 5-cell	On piping to relief header near cryostat		
V409R	010604046	Vacuum vessel relief for 5-cell	On cryostat		
TSH403	010604046	Ferrite Damper cooling water return switch	On ferrite cooling water line		
TSH404	010604046	Ferrite Damper cooling water return switch	On ferrite cooling water line		
TSH405	010604046	Ferrite Damper cooling water return switch	On ferrite cooling water line		
TSH406	010604046	Power coupler cooling water return switch	On ferrite cooling water line		
TT2039H	010604046	Inlet temperature for helium cooled flanges	Inside cryostat		
TE2027H	010604046	FPC wave guide temperature	Inside cryostat		
TI2027H	010604046	FPC wave guide temperature indicator	Inside cryostat		
TT1125H	010604046	FPC window Temperature for heater	Inside cryostat		
TT1124H	010604046	FPC window Temperature for heater	Inside cryostat		
TT1129H	010604046	FPC beam tube flange temperature	Inside cryostat		
TT2028H	010604046	Beam flange temperature	Inside cryostat		
TT2023H	010604046	Liquid Helium Ballast tank temperature	Inside ballast tank cryostat		
TT2024H	010604046	Liquid Helium Ballast tank temperature	Inside ballast tank cryostat		
LT0124H	010604046	Liquid Helium Ballast tank Level probe	Inside ballast tank cryostat		
LT0125H	010604046	Liquid Helium tank Level probe	Inside cryostat		
LT0126H	010604046	Liquid Helium Ballast tank Level probe	Inside ballast tank cryostat		
LT0127H	010604046	Liquid Helium tank Level probe	Inside cryostat		
TT1123H	010604046	Beam flange temperature	Inside cryostat		
TT2025H	010604046	Liquid Helium tank upper temperature	Inside cryostat		
TT2026H	010604046	Liquid Helium tank lower temperature	Inside cryostat		
TT2034H	010604046	Cavity Tuner temperature	Inside cryostat		
TT2035H	010604046	Cavity Tuner temperature - 2 inner frame	Inside cryostat		
TT2036H	010604046	Cavity Tuner temperature - 3 Piezo	Inside cryostat		
TT2037H	010604046	Cavity Tuner cooling line outlet temperature	Inside cryostat		
H10940R	010604046	Secondary helium relief	On piping to relief header near cryostat		
BD2519H	010604046	Primary helium relief	On piping to relief header near cryostat		
TSH400	010604046	Ferrite Damper cooling water return switch	On ferrite cooling water line		

TSH401	010604046	Ferrite Damper cooling water return switch	On ferrite cooling water line		
TSH402	010604046	Ferrite Damper cooling water return switch	On ferrite cooling water line		
HTR-407	010604046	Boil-off heater in 5-cell cavity helium vessel	Inside cryostat		
HTR-416	010604046	5K intercept Circuit Return cold gas heater, 5-cell cryostat, End flange tuner side	On ½" return line, top of cryostat		
HTR-417	010604046	5K intercept Circuit Return cold gas heater, 5-cell cryostat, End flange FPC side	On ½" return line, top of cryostat		
HTR-418	010604046	5K intercept Circuit Return cold gas heater, 5-cell cryostat, TUNER	On ½" return line, top of cryostat		
HTR-419	010604046	5K intercept Circuit Return cold gas heater, 5-cell cryostat, FPC	On ½" return line, top of cryostat		
HTR-424	010604046	FPC window heater #1, 5-CELLCAVITY	On FPC window, below cryostat		
HTR-425	010604046	FPC window heater #2, 5-CELLCAVITY	On FPC window below cryostat		
TT3337	010604046	5K circuit heater outlet temperature control, 5 CELL CAVITY, End flange tuner side	On ½" return line, top of cryostat		
TT3338	010604046	5K circuit heater outlet temperature control, 5 CELL CAVITY, End flange FPC side	On ½" return line, top of cryostat		
TT3339	010604046	5K circuit heater outlet temperature control, 5 CELL CAVITY, TUNER	On ½" return line, top of cryostat		
TT3340	010604046	5K circuit heater outlet temperature control, 5 CELL CAVITY, FPC	On ½" return line, top of cryostat		
TT3341	010604046	5K circuit heater SHEET OVERTEMP 5 CELL, End flange tuner side	On ½" return line, top of cryostat		
TT3342	010604046	5K circuit heater SHEET OVERTEMP 5 CELL, End flange FPC side	On ½" return line, top of cryostat		
TT3343	010604046	5K circuit heater SHEET OVERTEMP 5 CELL, TUNER	On ½" return line, top of cryostat		
TT3344	010604046	5K circuit heater SHEET OVERTEMP 5 CELL, FPC	On ½" return line, top of cryostat		

B.9 1660 PLANT Valve & Instrument List

Tag	P&ID Number	Description	Location	FAIL POSITION	Check
H9809M	010604048	1660 Coldbox High pressure inlet Manual isolation valve. H9809M (V391M)	Left rear corner of 1660 skid		
H9807M	010604048	Manual isolation valve(V339) for low side tap(to atmosphere) on compressor return line			
H9808M	010604048	Manual isolation valve(V347) for PI746H on compressor return line			
H9810M	010604048	Snubber valve (V349) for PI747H (PI33)			
H9811M	010604048	Manual needle valve (V396) for supplying warm helium purge upstream of JT5 valve (JT 307)	Rear panel		
H9812M	010604048	Snubber valve (V368) for PT601H	Left rear corner of 1660 skid		
H9813M	010604048	Bleed Valve from high pressure line precooler supply to atmosphere (V397)	Left rear corner of 1660 skid		
H9817M	010604048	Manual isolation valve, to evacuation line from low pressure compressor return line			
H9818M	010604048	Manual purge or external source connection valve(V44) for evacuation header section isolated by valve H9819M	Side Panel		
H9819M	010604048	Manual isolation valve(V43) of evacuation line from vacuum pump	Side Panel		
H9820M	010604048	Manual purge valve (V309) on HP helium line after boiler (E83) HX2606	Rear panel		
H9821M	010604048	Manual purge valve (V312) on HP helium line UPSTREAM of boiler	Rear panel		
H9822M	010604048	Snubber valve (V38) for PI748H (PI36)			
H9824M	010604048	Regen vacuum pumpout cross over valve(V36) for charcoal bed A	Side Panel		
H9825M	010604048	Regen vacuum pumpout cross over valve (V35) for charcoal bed B	Side Panel		
H9826M	010604048	Snubber valve (V37) for PI749H (PI31)			
H9827M	010604048	Snubber valve (V322) PI750H (PI37A) Pressure readout Inlet side to expander EX8A (E37A)			
H9828M	010604048	Manual isolation valve (V61) evacuation line for Inlet side to expander EX8A (E37A)	Side Panel		
H9829M	010604048	Manual isolation valve (V63) evacuation line for Inlet side to expander EX8B (E37B)	Side Panel		
H9830M	010604048	Manual isolation valve (V15) engine purge line to Inlet side to expander EX8A (E37A)			
H9831M	010604048	Manual isolation valve (V25) engine purge line to Inlet side to expander EX8B (E37B)	Side Panel		

H9832M	010604048	Snubber valve (V320) PI751H (PI37B) Pressure readout Inlet side to expander EX8B (E37B)			
H9833M	010604048	Manual isolation valve (V26) engine purge line from outletside of expander EX8B (E37B)	Side Panel		
H9834M	010604048	Manual isolation valve (V16) engine purge line out from outletside of expander EX8A (E37A)	Side Panel		
H9835M	010604048	Snubber valve (V324) PI752H (PI39A) Pressure readout Inlet side to expander EX9A (E37B)			
H9836M	010604048	Manual isolation valve (V62) evacuation line for Inlet side to expander EX9A (E39A)	Side Panel		
H9837M	010604048	Manual isolation valve (V64) evacuation line for Inlet side to expander EX9B (E39B)	Side Panel		
H9838M	010604048	Manual isolation valve (V17) engine purge line to Inlet side to expander EX9A (E39A)	Side Panel		
H9839M	010604048	Manual isolation valve (V27) engine purge line to Inlet side to expander EX9B (E39B)	Side Panel		
H9840M	010604048	Snubber valve (V324) PI753H (PI39B) Pressure readout Inlet side to expander EX9A(E37A)			
H9841M	010604048	Manual isolation valve (V28) engine purge line out from outlet side of expander EX9B (E37B)	Side Panel		
H9842M	010604048	Manual isolation valve (V18) engine purge line out from outlet side of expander EX9A (E37A)	Side Panel		
H9843M	010604048	Snubber valve (V366) for PI754H (PI34) Pressure readout UPSTREAM of JT5 (JT307)			
H9845A	010604048	Solenoid operated dump valve of high pressure supply precooler line to atmosphere (V330)	Left rear corner of 1660 skid	F.C.	
H9849M	010604048	Upstream manual isolation valve (V31) of charcoal bed F2001H (E36-A)	Front Right Top Plate		
H9852M	010604048	Downstream manual isolation valve (V32) of charcoal bed F2001H (E36-A)	Front Right Top Plate		
H9850M	010604048	Upstream manual isolation valve (V33) of charcoal bed F2002H (E36-B)	Front Right Top Plate		
H9851M	010604048	Downstream manual isolation valve (V34) of charcoal bed F2002H (E36-B)	Front Right Top Plate		
H9844M	010604048	Manual purge valve (V358)Between HX2501 (E31) and hHX2502 (E32)	Rear Panel		
H9847M	010604048	Manual purge valve (V357) Between exchanger HX-2503 (E33) and hx-2504 (E34)	Rear Panel		

H9848M	010604048	Manual purge valve (V388)on return line into HX2504 (E34B)			
H9853M	010604048	Manual isolation valve (V315) inlet to expander EX8A (E37A)	Left Rear Top Plate		
H9854M	010604048	Manual isolation valve (V325) inlet to expander EX8B (E37B)	Right Front Top Plate		
H9856M	010604048	Manual isolation valve (V316) outlet to expander EX8A (E37A)	Left Rear Top Plate		
H9855M	010604048	Manual isolation valve (V326) outlet to expander EX8B (E37B)	Right Front Top Plate		
H9857M	010604048	Manual isolation valve (V317) inlet to expander EX9A (E39A)	Left Front Top Plate		
H9858M	010604048	Manual isolation valve (V337) inlet to expander EX9B (E39B)	Right Rear Top Plate		
H9859M	010604048	Manual isolation valve (V328) outlet to expander EX9B (E39B)	Right Rear Top Plate		
H9860M	010604048	Manual isolation valve (V318) outlet to expander EX9A (E39A)	Left Front Top Plate		
H9861M	010604048	Manual purge valve (V373)on return line Bayonet BC-2	Rear Panel		
H9863M	010604048	Manual purge valve (V377)on return line Bayonet BC-3	Rear Panel		
H9874M	010604048	Manual purge valve on compressor suction return line, 1660 outlet, downstream of check valve H9893C			
H9893C	010604048	Check valve on compressor suction return line, 1660 outlet	Above 1600 plant on return line		
H9903A	010604048	1660 Coldbox High pressure inlet solenoid actuated isolation valve N.C. H9903A (V323A)	Left rear corner of 1660 skid	F.C.	
H9904A	010604048	Two-way flow split control valve (V806) betwenn HX-E30 and precooler	Left rear corner of 1660 skid	Two way	
H9905A	010604048	Actuated cooldown return valve(V387) from cooldown return header to between HX2500 (E30) and HX-2501 (E31)	Top plate front	F.O.	
H9906A	010604048	Actuated Cooldown supply crossover valve (V385) from HP after charcoal beds (60K)into cooldown line supply line		F.O. (Should change to F.C.)	
H9907A	010604048	Actuated cooldown return valve(V389) from cooldown return header to between HX2502 (E32) and HX-2503 (E33)	Top plate front	F.C.	
H9908A	010604048	cOoldown Crossover valve (V382) to BC-6 connection from expanders 9A/B	Top plate front, right	F.C.	
H9909A	010604048	Actuated Cross -over valve (V343)from HP JT loop to BC-5 /H9911A	Top plate front, left	F.C.	
H1410A-JT5	010604048	JT valve (JT307) to dewar line	Top plate front, center		
H9911A	010604048	Actuated Isolation valve (V342) for BC-5 connection	Top plate rear, right	F.C.	

H9912A	010604048	Actuated isolation valve (V367) between JT supply and bayonet BC-1	Top plate rear	F.O.	
H9913A	010604048	Actuated isolation valve (V318) on discharge side of expanders 9A/B	Top plate front, right	N.O.	
H9914A	010604048	Actuated isolation valve (V356) between Return bayonet line BC-2 and Exchanger HX2504 (E34)	Top plate rear,	F.O.	
H9915A	010604048	Actuated isolation valve (V355) between Return bayonet line BC-4 and Exchanger HX2504A (E34A)	Top plate rear,	F.O.	
H9916A	010604048	Actuated isolation valve (V354) between Return bayonet line BC-3 and Exchanger HX2504B (E34B) cold end of plant	Top plate rear,	F.O.	
H9917A	010604048	Actuated Cross-over valve (V350) between Return bayonet line BC-2 and Cooldown return bypass line low side	Top plate front	F.C.	
H9918A	010604048	Actuated Cross-over valve (V351) between Return bayonet line BC-4 and Cooldown return bypass line low side	Top plate front	F.C.	
H9919A	010604048	Actuated Cross-over valve (V352) between Return bayonet line BC-3 and Cooldown return bypass line low side	Top plate front	F.C.	
H9953R	010604048	Relief valve (V333), 10 psi, compressor return line, upstream of check valve H9893C	Left rear, piped up high		
H9955R	010604048	Relief valve (V359) trapped volume cooldown return	Behind right rear panel		
H9956R	010604048	Relief Valve of high pressure line precooler supply (V321), 300 psig	Behind right rear panel		
H9958R	010604048	relief valve (V41) 300 psi charcoal bed A	Behind right rear panel		
H9959R	010604048	relief valve (V40) 300 psi charcoal bed B	Behind right rear panel		
H9960R	010604048	Relief valve (V360) trapped volume on Inlet side to expander EX8A (E37A)	Behind right rear panel		
H9961R	010604048	Relief valve (V303) trapped volume on Inlet side to expander EX8B (E37B)	Behind right rear panel		
H9962R	010604048	Relief valve (V304) trapped volume on Outlet side of expander EX8B (E37B)	Behind right rear panel		
H9963R	010604048	Relief valve (V361) trapped volume on Outlet side of expander EX8A (E37A)	Behind right rear panel		
H9964R	010604048	Relief valve (V362) trapped volume on Inlet side to expander EX9A (E39A)	Behind right rear panel		
H9965R	010604048	Relief valve (V305) trapped volume on Inlet side to expander EX9B (E39B)	Behind right rear panel		
H9966R	010604048	Relief valve (V306) trapped volume on Inlet side to expander EX9B (E39B)	Behind right rear panel		
H9967R	010604048	Relief valve (V363) trapped volume on outlet side to expander EX9A (E39A)	Behind right rear panel		
H9968R	010604048	Relief valve (V384) trapped volume (line after expander 9A/B exit valves) between Valves H9913A and H9860M,H9859M	Behind right rear panel		

H9969R	010604048	Relief valve (V390) trapped volume between Valves H9811M, filter F2012H(F41) AND JT5 (JT307)	Behind right rear panel		
H9970R	010604048	Relief valve (V338) trapped volume COOLDOWN SUPPLY LINE between Valves H9911A,H9909A,H9908A,H9906A	Behind right rear panel		
H9971R	010604048	Relief valve (V340) trapped volume between Valves H9911A and Bayonet BC-5	Behind right rear panel		
H9972R	010604048	Relief valve (V369) trapped volume between Valves JT5 (JT307) AND H9912A (V367)	Behind right rear panel		
H9973R	010604048	Relief valve (V344) trapped volume between Valves H9912A (V367) and bayonet BC-1	Behind right rear panel		
H9974R	010604048	Relief valve (V365) trapped volume between Valves H9914A (V356), H9917A(V350) and bayonet BC-2	Behind right rear panel		
H9975R	010604048	Relief valve Trapped volume between Valves H9915A (V355), H9918A(V351) and bayonet BC-4	Behind right rear panel		
H9976R	010604048	Relief valve Trapped volume between Valves H9916A (V354), H9919A(V352) and bayonet BC-3	Behind right rear panel		
H9988M	010604048	Manual isolation valve for PT605H on return line bayonet BC-2	Rear top plate		
H9989M	010604048	Manual isolation valve for PT606H on return line bayonet BC-4	Rear top plate		
ST100	010604048	Speed sensor Expander set A, 1660 plant			
ST200	010604048	Speed sensor Expander set B, 1660 plant			
SC101	010604048	Speed controller/brake for expander set A, 1660 plant			
ST201	010604048	Speed controller/brake for expander set B, 1660 plant			
N6000M	010604048	Manual isolation valve, LO side of DPT6090N			
N6001M	010604048	Manual isolation valve, HI side of DPT6090N			
N6002M	010604048	Manual equalization valve, on DPT6090N			
N6050R	010604048	Relief valve, Nitrogen boiler HX2605 (E81)			
N6070C	010604048	Check valve N2 vent from precooler			
N6100A	010604048	Actuated Control valve, LN2 fill into boiler		F.C.	
V5208A	010604048	Actuated vacuum valve to rotary vacuum pump		F.C.	
V5212M	010604048	Manual vacuum isolation valve between cold box and pumpout/ VT100			
V5210M	010604048	manual bleed up valve for insulating vacuum volume 1660 plant			

V5211R	010604048	Relief valve, 2 inch pop out spring cap, vacuum volume relief			
BD2524 V	010604048	1660S vacuum vessel			
DPT 6090N	010604048	Differential pressure sensor to measure liquid level head of LN2 boiler in 1660 plant			
F2000H	010604048	Inlet particulate filter high pressure helium supply side into 1660 plant to first exchanger HX-2500 (E30)			
F2001H	010604048	65K Carbon adsorption bed filter A, F2001H			
F2002H	010604048	65 KCarbon adsorption bed filter B, F2002H			
F2003H	010604048	25K Carbon adsorption bed filter, F2003H			
F2004H	010604048	Inlet buffer tank to expander 8A			
F2005H	010604048	Inlet buffer tank to expander 8B			
F2006H	010604048	Outlet buffer tank for expander 8A			
F2007H	010604048	Outlet buffer tank for expander 8B			
F2008H	010604048	Inlet buffer tank to expander 9A			
F2009H	010604048	Inlet buffer tank to expander 9B			
F2010H	010604048	Outlet buffer tank for expander 9A			
F2011H	010604048	Outlet buffer tank for expander 9B			
F2012H	010604048	Inlet particulate filter high pressure helium supply side upstream to JT-5 valve			
HS3700	010604048	Speed Safety switch to close solenoid valve H9903A high pressure supply from compressor on engine overspeed			
HX2500	010604048	Heat exchanger He/He 300K-80K, 1660S coldbox			
HX2501	010604048	Heat exchanger He/He 80K-60K, 1660S coldbox			
HX2502	010604048	Heat exchanger He/He 60K-30K, 1660S coldbox			
HX2503	010604048	Heat exchanger He/He 30K-10K, 1660S coldbox			
HX2504	010604048	Heat exchanger He/He 10K-5K, 1660S coldbox			
HTR-31	010604048	Heater for charcoal bed A: F2501H			
HTR-32	010604048	Heater for charcoal bed B: F2502H			
PI746H	010604048	Pressure indicator, 1660S Low pressure side, outlet of coldbox back to compressor			
PI747H	010604048	Pressure indicator, 1660S HP inlet side, downstream of filter	Rear right panel		
PI748H	010604048	Pressure indicator, downstream of charcoal bed A	Rear right panel		
PI749H	010604048	Pressure indicator, downstream of charcoal bed A	Rear right panel		

PI750H	010604048	Pressure indicator inlet side of expander 8A	Rear right panel		
PI751H	010604048	Pressure indicator inlet side of expander 8B	Rear right panel		
PI752H	010604048	Pressure indicator inlet side of expander 9A	Rear right panel		
PI753H	010604048	Pressure indicator inlet side of expander 9B	Rear right panel		
PI754H	010604048	Pressure indicator upstream of JT5 valve inlet	Rear right panel		
PT601H	010604048	Inlet pressure high pressure side room temperature side of heatexchanger 2500 (E30)	Rear right panel		
PT604H	010604048	Downstream pressure of JT307, Supply pressure at Bayonet BC-1 to dewar	Top Plate rear		
PT605H	010604048	Return pressure at BC-2/ 1660 plant cold end pressure	Top Plate rear		
PT606H	010604048	Return pressure at BC-4/ 1660 plant cold end pressure	Top Plate rear		
TI5400	010604048	Local display tag for TT653H, of TJ1	(Scientific Instruments' diode conditioner/display unit on plant's front panel]		
TI5401	010604048	Local display tag for TT656H, of TJ1	(Scientific Instruments' diode conditioner/display unit on plant's front panel]		
TI5402	010604048	Local display tag for TT657H, of TJ1	(Scientific Instruments' diode conditioner/display unit on plant's front panel]		
TI5403	010604048	Local display tag for TT659H, of TJ1	(Scientific Instruments' diode conditioner/display unit on plant's front panel]		
TI5404	010604048	Local display tag for TT660H, of TJ1	(Scientific Instruments' diode conditioner/display unit on plant's front panel]		
TI5405	010604048	Local display tag for TT665H, of TJ2	(Scientific Instruments' multi diode sensor conditioner/display unit #2 on plant's front panel]		

TI5406	010604048	Local display tag for TT661H, of TJ2	(Scientific Instruments' multi diode sensor conditioner/display unit #2 on plant's front panel]		
TI5407	010604048	Local display tag for TT662H, of TJ2	(Scientific Instruments' multi diode sensor conditioner/display unit #2 on plant's front panel]		
TI5408	010604048	Local display tag for TT663H, of TJ2	(Scientific Instruments' multi diode sensor conditioner/display unit #2 on plant's front panel]		
TI5409	010604048	Local display tag for TT664H, of TJ2	(Scientific Instruments' multi diode sensor conditioner/display unit #2 on plant's front panel]		
ZE100	010604048	JT5 Valve position element			
TT307H	010604048	Temperature for JT valve positioner			
TT622N	010604048	Temperature, GN2 vent			
TT653H	010604048	Helium temperature, low pressure side of heatexchanger stack leaving coldbox	Inside 1660 coldbox		
TT654H	010604048	Temperature, charcoal bed A, heater controller temperature	Inside 1660 coldbox		
TT655H	010604048	Temperature, charcoal bed B, heater controller temperature	Inside 1660 coldbox		
TT656H	010604048	Temperature, outlet temperature of expanders 8A/B	Inside 1660 coldbox		
TT657H	010604048	Temperature, outlet temperature of expanders 8A/B	Inside 1660 coldbox		
TT658H	010604048	Temperature sensor, inlet temperature high pressure helium upstream of expanders 9A/B	Inside 1660 coldbox		
TT659H	010604048	Temperature, outlet temperature of expanders 9A/B	Inside 1660 coldbox		
TT660H	010604048	Temperature, Inlet temperature to JT-5 valve	Inside 1660 coldbox		
TT661H	010604048	Temperature, helium return temperature from bayonet BC-3 from Valvebox/ End users cryomodules	Inside 1660 coldbox		
TT662H	010604048	Temperature, helium return temperature from bayonet BC-4 Cooldown return external	Inside 1660 coldbox		

TT663H	010604048	Temperature, helium return temperature from bayonet BC-2 from liquid storage dewar vapor return	Inside 1660 coldbox		
TT664H	010604048	Temperature sensor, outlet temperature helium supply from bayonet BC-1 from 1660 plant TO liquid storage dewar	Inside 1660 coldbox		
TT665H	010604048	Temperature sensor, outlet temperature high pressure helium supply from bayonet BC-5 from 1660 plant	Inside 1660 coldbox		

B.10 Overall System diagram Valve & Instrument List

Tag	P&ID Number	Description	Location	FAIL POSITION	Check
H3300A	010604071	Pumpback valve to gas storage	Behind ambient vaporizer	F.C.	
H3301A	010604071	Bypass valve, Main helium Compressor	Behind ambient vaporizer	F.C.	
H3302A	010604071	Makeup valve from gas storage	Behind ambient vaporizer	F.C.	
H3303M	010604071	Manual bypass, main helium compressor	Pump room ANNEX	Manual	
H3304M	010604071	Isolation valve between 2nd and 3rd stage coalescers		MANUAL	
H3305M	010604071	Compressor suction isolation	Top of return line near Sullair compressor	MANUAL	
H3308R	010604071	Relief valve, LP Return line to main compressor	Outside building next the bathroom	RELIEF	
H3310M	010604071	Manual Purge/instrument tap valve before after 2nd stage coelescers		Manual	
H3311R	010604071	10 INCH VACUUM HEADER RELIEF	Behind ambient vaporizer NEEBA	Manual	
H3316A	010604071	Vapor return control valve to 20 Torr Header from small test dewar	Outside small block house, near 1000 Gal Cryofab dewar	F.C.	
H3317M	010604071	Manual Isolation valve for atmospheric discharge	Outside small block house, near 1000 Gal Cryofab dewar	Manual	
H3320A	010604071	Actuated Helium Control Valve, Return vapor from 40" vertical test dewar to 20 Torr helium vacuum header	On transfer line coming from VTF	F.O.	
H3321M	010604071	Manual Purge valve, on Vapor return line from 40 inch test dewar	On distribution valvebox PHPK		
H3322A	010604071	Actuated Helium Valve, Return vapor from 40" vertical test dewar to 4.5K low pressure end of cryoplant	On distribution valvebox PHPK	F.C.	
H3323A	010604071	Actuated Helium Valve, Return vapor from ERL cryomodules TO 4.5K cryoplant	On distribution valvebox PHPK	F.C.	
H3324A	010604071	Actuated Helium Control Valve, Return vapor from ERL cryomodules to 20 Torr helium vacuum header	On transfer line coming from ERL VJR	F.O.	
H3325R	010604071	Relief valve for trapped volume on cold vapor return line	On distribution valvebox PHPK		

H3326M	010604071	Manual Purge valve, on Vapor return line from ERL CRYOMODULES	On distribution valvebox PHPK	Manual	
H3327A	010604071	Actuated control valve from Liquid helium draw from 1000 gal storage dewar to VTD supply	On distribution valvebox PHPK	F.C.	
H3328A	010604071	Actuated valve with hand wheel, isolates Subcooler subcooled supply to Test dewar.	On distribution valvebox PHPK	F.C.	
H3329A	010604071	Actuated valve, isolates Subcooler subcooled supply to ERL cryomodules.	On distribution valvebox PHPK	F.C.	
H3330A	010604071	Actuated control valve from Liquid helium draw from 1000 gal storage dewar to subcooler fillvalve	On distribution valvebox PHPK	F.C.	
H3331A	010604071	Actuated control valve. Vapor return from Liquid helium storage dewar	On transfer line behind distribution valvebox PHPK	F.C.	
H3332A	010604071	Actuated control valve. Controls 4 atm Supply helium from plant to subcooler coils	On transfer line behind distribution valvebox PHPK	F.C.	
H3333M	010604071	Manual Purge valve, on liquid draw line from LHE dewar to valves H3327A and H3330A	On distribution valvebox PHPK		
H3334R	010604071	Relief valve, trapped volume line segment Liquid helium draw isolaton valve H3493M from dewar and H3327A and H3330A	On distribution valvebox PHPK		
H3335M	010604071	Manual Purge valve, on liquid supply line from LHE dewar to test dewar	On distribution valvebox PHPK		
H3336M	010604071	Manual purge valve, on vapor return line from Lhe dewar to 1660 plant	On transfer line behind distribution valvebox PHPK		
H3337R	010604071	Relief valve, trapped volume on vapor return line from Lhe dewar to 1660 plant between manual valve H3492M and H3331A	On transfer line behind distribution valvebox PHPK		
H3338R	010604071	Relief valve, trapped volume on liquid supply line from subcooler to ERL cryomodules, between valves H3329A and H3353A, H3354A,H3356M,H1404A, H1405A	On distribution valvebox PHPK		
H3339M	010604071	Manual purge valve, volume on liquid supply line from subcooler to ERL cryomodules, between valves H3329A and H3353A, H3354A,H3356M,H1404A, H1405A	On distribution valvebox PHPK		
H3340R	010604071	Relief valve, trapped volume on liquid supply line through subcooler between valves H3332A and H3328A, H33529A	On distribution valvebox PHPK		

H3341M	010604071	Manual purge valve, volume on liquid supply line through subcooler between valves H3332A and H3328A, H33529A	On distribution valvebox PHPK		
H3342A	010604071	Vapor return control valve to 20 Torr Header from SRF Gun boil-off	On SRF GUN VALVEBOX	F.O.	
H3343A	010604071	Vapor return control valve to 20 Torr Header from 5 cell cavity boil-off	On 5 cell VALVEBOX	F.O.	
H3344R	010604071	Nitrogen transfer line relief	On transferline out building near LN2 dewar, high elevation		
H10896A	010604071	20Torr Coldvapor Return valve for 5 cell	On transfer lines, west, near 5-cell cryostat	F.O.	
H10922A	010604071	20 Torr Coldvapor return valve for 5 cell	On transfer lines, west, near 5-cell cryostat	F.O.	
H10947M	010604071	Isolation valve between helium shield and lead flows manifold and compressor low side return line	On manifold end for MKS mass flow controllers		
H3353A	010604071	Actuated control valve, Liquid helium supply top fill reservoir volume for 5 cell SRF cavity	On 5 cell VALVEBOX	F.C.	
H3354A	010604071	Actuated control valve, Liquid helium supply to bottom fill 5 cell SRF cavity	On 5 cell VALVEBOX	F.C.	
H3356M	010604071	Manual isolation valve supply side of 5K circuits SRF Gun cryostat	On 5 cell VALVEBOX		
H3360M	010604071	Manual isolation flow, outlet side massflow controller 5K circuit solenoid SRFGun	On manifold for MKS mass flow controllers		
H3361M	010604071	Manual isolation flow, inlet side massflow controller 5K circuit solenoid SRFGun	On manifold for MKS mass flow controllers		
H3362R	010604071	Relief valve, 5K circuit solenoid SRFGun	On manifold for MKS mass flow controllers		
H3363M	010604071	Manual isolation flow, outlet side massflow controller 5K circuit FPC#1 SRFGun	On manifold for MKS mass flow controllers		
H3364M	010604071	Manual isolation flow, inlet side massflow controller 5K circuit FPC#1 SRFGun	On manifold for MKS mass flow controllers		
H3365R	010604071	Relief valve, 5K circuit FPC#1 SRFGun	On manifold for MKS mass flow controllers		
H3366M	010604071	Manual isolation flow, outlet side massflow controller 5K circuit FPC#2 SRFGun	On manifold for MKS mass flow controllers		

H3367M	010604071	Manual isolation flow, inlet side massflow controller 5K circuit FPC#2 SRFGun	On manifold for MKS mass flow controllers		
H3368R	010604071	Relief valve, 5K circuit FPC#2 SRFGun	On manifold for MKS mass flow controllers		
H3369M	010604071	Manual isolation flow, outlet side massflow controller 5K circuit Tuner 5 cell Cavity	On manifold for MKS mass flow controllers		
H3370M	010604071	Manual isolation flow, inlet side massflow controller 5K circuit Tuner 5 cell Cavity	On manifold for MKS mass flow controllers		
H3371R	010604071	Relief valve, 5K circuitTuner 5 cell Cavity	On manifold for MKS mass flow controllers		
H10935R	010604071	Relief valve, 5K circuit flange tuner side 5 cell Cavity	On manifold for MKS mass flow controllers		
H10931R	010604071	Relief valve, 5K circuit flange FPC side 5 cell Cavity	On manifold for MKS mass flow controllers		
H10927R	010604071	Relief valve, 5K circuit FPC, 5 cell Cavity	On manifold for MKS mass flow controllers		
H3486M	010604071	Manual isolation valve: Return vapor subcooler bath to vapor return line 1660 Plant BC-2	On transfer line behind subcooler		
H3487A	010604071	Small Control valve, small test dewar volume to 20Torr header to Kinney vacuum pump	Outside small block house, near 1000 Gal Cryofab dewar	F.C.	
H3488A	010604071	Return Cross over valve from small test dewar volume to 1.2 atm low pressure line back to Sullair helium compressor suction	Outside small block house, near 1000 Gal Cryofab dewar	F.C.	
H3489C	010604071	Check valve, small test dewar vent to 1 atmosphere line	Outside small block house, near 1000 Gal Cryofab dewar		
H3507R	010604071	Relief valve, trapped volume, vapor return line from valve H3323A/H3322A(testdewar side/ERL side) to 1660 Plant BC-3	On distribution valvebox PHPK		
H3508R	010604071	Relief valve, trapped volume, vapor return line from Lhe dewar valve H3331A to 1660 Plant BC-2	On transfer line behind distribution valvebox PHPK		
H3509R	010604071	Relief valve, trapped volume, liquid supply line from 1660 plant Jt valve to Lhe storage dewar	On transfer line behind distribution valvebox PHPK		

H3510R	010604071	Relief valve, trapped volume, High pressure supply line from 1660 plant to wet expander inlet side	On transfer line behind distribution valvebox PHPK		
H3526R	010604071	Relief valve, trapped volume of Wet expander discharge line to liquid helium storage dewar	On transfer line behind distribution valvebox PHPK		
H3527R	010604071	Relief valve, 5K circuit Endflange#2 SRF-Gun	On manifold for MKS mass flow controllers		
H3529M	010604071	Manual isolation flow, outlet side massflow controller 5K circuit Endflange-1 SRFGun	On manifold for MKS mass flow controllers		
H3530M	010604071	Manual isolation flow, inlet side massflow controller 5K circuit Endflange-1 SRFGun	On manifold for MKS mass flow controllers		
H3531M	010604071	Manual isolation flow, inlet side massflow controller 5K circuit Endflange#2 SRFGun	On manifold for MKS mass flow controllers		
H3532M	010604071	Manual isolation flow, outlet side massflow controller 5K circuit Endflange#2 SRFGun	On manifold for MKS mass flow controllers		
H3533A	010604071	Communication valve for vessel bottom fill line 5-cell system	5-cell valvebox	F.C.	
H3536E	010604071	Thermal mass flowcontroller valve, actuated. 5-cell cavity 5K circuit FPC coupler	On manifold for MKS mass flow controllers		
H3537E	010604071	Thermal mass flowcontroller valve, actuated. 5-cell cavity 5K circuit End Flange, FPC side	On manifold for MKS mass flow controllers		
H3538E	010604071	Thermal mass flowcontroller valve, actuated. 5-cell cavity 5K circuit End Flange, Tuner side	On manifold for MKS mass flow controllers		
H3539E	010604071	Thermal mass flowcontroller valve, actuated. 5-cell cavity 5K circuit Tuner	On manifold for MKS mass flow controllers		
H3540E	010604071	Thermal mass flowcontroller valve, actuated. SRFGun End Flange 2	On manifold for MKS mass flow controllers		
H3541E	010604071	Thermal mass flowcontroller valve, actuated. SRFGun End Flange 1	On manifold for MKS mass flow controllers		
H3542E	010604071	Thermal mass flowcontroller valve, actuated. SRFGun FPC-2	On manifold for MKS mass flow controllers		
H3543E	010604071	Thermal mass flowcontroller valve, actuated. SRFGun FPC-1	On manifold for MKS mass flow controllers		
H3544E	010604071	Thermal mass flowcontroller valve, actuated. SRFGun solenoid	On manifold for MKS mass flow controllers		

H3545A	010604071	Test Dewar atmospheric vent valve	Outside small block house, near 1000 Gal Cryofab dewar	F.C.	
H3551M	010604071	Manual valve to atmosphere	On manifold for MKS mass flow controllers		
H3552M	010604071	Manual valve to atmosphere	On manifold for MKS mass flow controllers		
H3553M	010604071	Manual valve. Tee of 1/2” helium warm supply line from compressor to VTD	On 2” piping above subcooler		
H3554M	010604071	Manual valve. Isolate 1/2” helium line from 2” warm supply line from compressor to VTD	On 2” piping above subcooler		
H10930M	010604071	Manual isolation flow, outlet side massflow controller 5K circuit FPC on 5 cell Cavity	On manifold for MKS mass flow controllers		
H10928M	010604071	Manual isolation flow, outlet side massflow controller 5K circuit FPC on 5 cell Cavity	On manifold for MKS mass flow controllers		
H10934M	010604071	Manual isolation flow, outlet side massflow controller 5K circuit Endflange-FPCside on 5 cell Cavity	On manifold for MKS mass flow controllers		
H10932M	010604071	Manual isolation flow, outlet side massflow controller 5K circuit Endflange-FPCside on 5 cell Cavity	On manifold for MKS mass flow controllers		
H10938M	010604071	Manual isolation flow, outlet side massflow controller 5K circuit Endflange-Tunerside on 5 cell Cavity	On manifold for MKS mass flow controllers		
H10936M	010604071	Manual isolation flow, outlet side massflow controller 5K circuit Endflange-Tunerside on 5 cell Cavity	On manifold for MKS mass flow controllers		
N3301M	010604071	Manual isolation valve, LN2 cathode cooling supply	SRFGUN Valvebox		
N3302A	010604071	Actuated control valve, LN2 5-Cell shield supply	Near 5-CELL Valvebox	F.C.	
N3303A	010604071	Actuated control valve, LN2 SRF Gun shield supply	SRFGUN Valvebox	F.C.	
N3314M	010604071	Manual isolation valve, GN2 purge	On cryoduct VJR to VTF		
N3315A	010604071	Actuated control valve, LN2 VTF shield supply	On cryoduct VJR to VTF	F.C.	
N3344R	010604071	Relief valve, Nitrogen 65 PSIG	On LN2 transfer line outside near 11,000 Gal LN2 dewar	Relief	

N3346A	010604071	Keep full valve LN2 supply	Outside ERL blockhouse before entering the blockhouse at 3inch PVC penetration	Float	
N3347A	010604071	Keep full valve LN2 plant supply	On LN2 transfer line	Float	
BD2531V	010604071	CRYODUCT/VALVEBOX	On cryoduct outside		
BD2538V	010604071	CRYODUCT RELIEF, 7 psid	On cryoduct VJR outside ERL blockhouse between plant and ERL	Burstdisk	
FE3310H	010604071	5K circuits mass flow controller flowmeter reading output signal 5 CELL CAVITY FPC	On manifold for MKS mass flow controllers		
FE3311H	010604071	5K circuits mass flow controller flowmeter readingoutput signal 5-CELL CAVITY End Flange FPC side	On manifold for MKS mass flow controllers		
FE3312H	010604071	5K circuits mass flow controller flowmeter reading output signal 5-CELL CAVITY End Flange Tuner side	On manifold for MKS mass flow controllers		
FE3313H	010604071	5K circuits mass flow controller flowmeter reading output signal 5-CELL CAVITY TUNER	On manifold for MKS mass flow controllers		
FE3314H	010604071	5K circuits mass flow controller flowmeter reading output signal SRF GUN FPC#1	On manifold for MKS mass flow controllers		
FE3315H	010604071	5K circuits mass flow controllerflowmeter reading output signal SRF GUN FPC#2	On manifold for MKS mass flow controllers		
FE3316H	010604071	5K circuits mass flow controller flowmeter reading output signal SRF GUN END FLANGE #1 Tuner side	On manifold for MKS mass flow controllers		
FE3317H	010604071	5K circuits mass flow controller flowmeter reading output signal SRF GUN END FLANGE #2 FPC side	On manifold for MKS mass flow controllers		
FE3318H	010604071	5K circuits mass flow controller flowmeter reading output signal SRF GUN Solenoid	On manifold for MKS mass flow controllers		
HX3300	010604071	Heat exchanger, Recovery 2K-4K, SRF GUN liquid helium supply against Vapor return	SRFGun valvebox EDEN		
HX3301	010604071	Heat exchanger, Recovery 2K-4K, 5-CELL CAVITY liquid helium supply against Vapor return	5-CELL valvebox EDEN		
PT3304H	010604071	Subcooled helium supply pressure	On distribution valvebox PHPK		

PT3310H	010604071	Sullair compressor inlet pressure	Top of return line near Sullair compressor		
PT3328	010604071	SCRF Gun Helium bath return pressure	SCRF GUN valvebox		
PT3329	010604071	5 cell helium vessel return pressure	5-CELL valvebox EDEN		
TT3303H	010604071	Temperature, Cold vapor return from VTD 40"	On cryoduct VJR from VTF		
TT3304H	010604071	Temperature, Cold vapor return from ERL cryostats	On cryoduct VJR from ERL		
TT3318H	010604071	SRF Gun Helium Supply, Upstream of recovery heat exchanger	SCRF GUN valvebox		
TT3319H	010604071	SRF Gun Helium Supply, Downstream of recovery heat exchanger	SCRF GUN valvebox		
TT3320H	010604071	5 Cell Cavity Helium Supply, Upstream of recovery heat exchanger	5-CELL valvebox		
TT3321H	010604071	5 Cell Cavity Helium Supply, , Downstream of recovery heat exchanger	5-CELL valvebox		

B.11 Subcooler Valve & Instrument List

Tag	P&ID Number	Description	Location	FAIL POSITION	Check
H3372R	010604087	1/2 psig relief,Blowdown relief with isolation valve	On subcooler skid		
H3373M	010604087	Isolation valve for 1/2 psig relief H3327R	On subcooler skid		
H3374R	010604087	RELIEF VALVE, SUBCOOLER	On subcooler skid		
H3376M	010604087	Isolation valve for instrumentation	On subcooler skid		
H3377M	010604087	Cooldown return valve to compressor suction	On subcooler skid		
H3378M	010604087	Isolation valve for shield flow flowmeter	On subcooler skid		
H3380M	010604087	Isolation valve for instrumentation	On subcooler skid		
H3381M	010604087	Pumpout valve for PT3301H Volume	On subcooler skid		
H3534V	010604087	Pumpout port/ relief for insulating vacuum subcooler system	On subcooler skid		
BD2532H	010604087	burstdisk helium relief	On subcooler skid		
BD2533V	010604087	burstdisk vacuum relief	On subcooler skid		
FE3303	010604087	Heat shield outlet flow	On subcooler skid		
LT3303H	010604087	Subcooler level probe	On subcooler skid		
PI3302H	010604087	Pressure indicator, local dial gage, subcooler bath pressure	On subcooler skid		
PT3300H	010604087	Helium pressure in subcooler bath	On subcooler skid		
PT3301H	010604087	Vacuum presure in insulating vacuum volume	On subcooler skid		
TT3300H	010604087	Temperature, outlet of subcooled helium stream, of subcooler	On subcooler skid		
TT3317H	010604087	Temperature sensor, subcooler helium vessel	On subcooler skid		

B.12 Cold Cathode Cooling Loop Valve & Instrument List

Tag	P&ID Number	Description	Location	FAIL POSITION	Check
N3304M	010604088	Manual isolation valve, LN2 purge	SRF GUN Valvebox EDEN		
N3305R	010604088	Relief valve, Nitrogen 65 PSIG	SRF GUN Valvebox EDEN		
N3306M	010604088	Manual isolation valve, GN2 purge	SRF GUN Valvebox EDEN		
N3307A	010604088	Actuated Control valve, LN2 phase seperator fill	SRF GUN Valvebox EDEN	F.C.	
N3344C	010604088	Check valve N2 vent from cathode and heater	SRF GUN Valvebox EDEN		
N3309R	010604088	Relief valve, Nitrogen 15 PSIG	SRF GUN Valvebox EDEN		
N3310A	010604088	Actuated Control valve, LN2 pressure control	SRF GUN Valvebox EDEN	F.C.	
N3311R	010604088	Relief valve, Nitrogen 45 PSIG	SRF GUN Valvebox EDEN		
N3345M	010604088	Manual isolation valve, cathode supply	On transfer line to cathode cart		
HTR-423	010604088	Heater for measuring flow rate	SRF GUN Valvebox EDEN		
LIC3300N	010604088	Liquid nitrogen level probe, capacitance	SRF GUN Valvebox EDEN		
PT3320N	010604088	Liquid nitrogen tank pressure for cathode cooling	SRF GUN Valvebox EDEN		
TSH3307 H	010604088	Cathode Cooling heater high temperature switch	SRF GUN Valvebox EDEN		
TT3301N	010604088	Temperature, 2 phase return from cathode cooling loop	SRF GUN Valvebox EDEN		
TT3302N	010604088	Temperature, Liquid supply to cathode cooling loop from separator	SRF GUN Valvebox EDEN		
TT3307N	010604088	Temperature, Nitrogen heater outlet temperature	SRF GUN Valvebox EDEN		

B.13 Wet expander Valve & Instrument List

Tag	P&ID Number	Description	Location	FAIL POSITION	Check
H3382M	010604089	Manual isolation valve,Warm helium supply purge to wet expander inlet side line	Wet expander skid		
H3383R	010604089	Relief valve, Trap volume between H3386M and H3385A on inlet line to wetexpander pistons	Wet expander skid		
H3384M	010604089	Manual isolation valve from Supply line side line inlet to wetepxander to cooldown return line	Wet expander skid		
H3385A	010604089	Actuated Control valve, wet expander inlet valve	Wet expander skid	F.C.	
H3386M	010604089	Bayonet isolation valve, inlet side, used only if transfer line is disconnected	Wet expander skid		
H3387R	010604089	Relief valve, trapped volume between wet expander linlet valve and expander piston inlet	Wet expander skid		
H3388M	010604089	Bayonet isolation valve, ooutlet side, used only if transfer line is disconnected	Wet expander skid		
H3389C	010604089	Check valve, on relief line, discharge side of wetexpander	Wet expander skid		
H3390R	010604089	Relief valve, trapped volume, between H3391M and H3388M if closed	Wet expander skid		
H3391M	010604089	Manual isolation valve, discharge line wetexpander	Wet expander skid		
H3392M	010604089	Manual isolation valve, to cooldown return line back to 1660 compressor suction line	Wet expander skid		
H3393R	010604089	Relief valve, trapped volume, between H3391M and wet expander discharge	Wet expander skid		
V3301R	010604089	Relief cap vacuum	Wet expander skid		
V3302M	010604089	isolation valve for vacuum gage	Wet expander skid		
V3303M	010604089	Bleed up valve for insulating vacuum space	Wet expander skid		
BD2528V	010604089	WET EXPANDER POD (V3300R) (V14)	Wet expander skid		
PI3300H	010604089	Pressure indicator, local dial gage, inlet to wet epxander upstream of inlet isolation valve	Wet expander skid		
PI3304H	010604089	Pressure indicator, local dial gage, outlet of wet epxander upstream of outlet isolation valve	Wet expander skid		
PS3303H	010604089	Low pressure switch for motor power	Wet expander skid		
PS3304H	010604089	High pressure switch for motor power	Wet expander skid		
PT3302H	010604089	Pressure sensor for expander inlet valve	Wet expander skid		
PT3303H	010604089	Expander pressure sensor	Wet expander skid		
TE3300H	010604089	Temperature sensor for expander inlet	Wet expander skid		
TE3302H	010604089	Expander outlet temperature	Wet expander skid		

B.14 Cold N2 Vent System Valve & Instrument List

Tag	P&ID Number	Description	Location	FAIL POSITION	Check
N3351C	010604175	Check valve, 5-CELL N2 SHIELD VENT	Outside ERL blockhouse near ambient vaporizer		
N3352C	010604175	Check valve, COLD CATHODE N2 VENT	Outside ERL blockhouse near ambient vaporizer		
N3353R	010604175	Trapped volume relief, N2 VENT HEADER	Outside ERL blockhouse near ambient vaporizer		
N3356R	010604175	Trapped volume relief	Outside ERL blockhouse near ambient vaporizer		
N3357R	010604175	Trapped volume relief	Outside ERL blockhouse near ambient vaporizer		
N3358C	010604175	Check valve	Outside ERL blockhouse near ambient vaporizer		
N3359C	010604175	Check valve	Outside ERL blockhouse near ambient vaporizer		
N3360C	010604175	Check valve	Outside ERL blockhouse near ambient vaporizer		
N6245R	010604175	Trap volume relief, 5 CELL SHIELD RELIEF	Outside ERL blockhouse near ambient vaporizer		
N6246R	010604175	Trap volume relief, SRF GUN SHIELD	Outside ERL blockhouse near ambient vaporizer		

B.15 40” Vertical Test Facility Dewar Valve & Instrument List

Tag	P&ID Number	Description	Location	FAIL POSITION	Check
H3512A	CA6010001	Top Fill valve, Lhe supply	Top plate Vertical test Dewar	F.C.	
H3513A	CA6010001	Cooldown and Fill valve, Lhe supply	Top plate Vertical test Dewar	F.C.	
H3514M	CA6010001	Pumpout port isolation valve for pumping air/N2 out from helium volume with vacuum pump	Top plate Vertical test Dewar		
H3515M	CA6010001	instrument isolation valve	Top plate Vertical test Dewar		
H3516R	CA6010001	Relief valve, Pilot operated, low pressure, 5 psig, for helium volume	Top plate Vertical test Dewar		
H3517M	CA6010001	instrument isolation valve for volume between H3516R and check H3518C	Top plate Vertical test Dewar		
H3518C	CA6010001	Check valve	Top plate Vertical test Dewar		
H3519R	CA6010001	Relief valve, trapped volume line segment Liquid helium supply to dewar	Top plate Vertical test Dewar		
H3520M	CA6010001	Isolation valve for instrumentation	Top plate Vertical test Dewar		
H3521A	CA6010001	solenoid operated valve, warm helium purge line	Top plate Vertical test Dewar	F.C.	
H3522M	CA6010001	Needle valve, warm helium purge line	Top plate Vertical test Dewar		
N3340R	CA6010001	Relief valve, Nitrogen 25 PSIG	Top plate Vertical test Dewar		
N3341C	CA6010001	Check valve, LN2 vent	Top plate Vertical test Dewar		
N3342A	CA6010001	Solenoid valve, GN2 supply	Top plate Vertical test Dewar	F.C.	
N3343M	CA6010001	Manual isolation valve, GN2 supply	Top plate Vertical test Dewar		
V3309A	CA6010001	Automatic isolation valve for turbo pump inlet	Top plate Vertical test Dewar	F.C.	
V3310M	CA6010001	Manual isolation valve for vacuum sensors insulating vacuum space Large vertical test dewar	Top plate Vertical test Dewar		
V3311M	CA6010001	Manual isolation valve for vacuum sensor for guard space on top plate flange seal of Large vertical test dewar	Top plate Vertical test Dewar		
V3312M	CA6010001	Manual isolation valve for guard vacuum space for top plate flange o-ring seal	Top plate Vertical test Dewar		
BD2529H	CA6010001	Burst disk helium volume 8 psig	Top plate Vertical test Dewar		
BD2530V	CA6010001	Burst disk vacuum volume 8 psig	Below deck		
HTR-420	CA6010001	Heater on Vertical test dewar helium vessel	Inside Vertical Test Dewar		
HTR-421	CA6010001	Heater on Vertical test dewar helium vessel	Inside Vertical Test Dewar		

HTR-422	CA6010001	Heater on Vertical test dewar helium vessel	Inside Vertical Test Dewar		
LT3317	CA6010001	VTF level Probe	Inside Vertical Test Dewar		
PT3321H	CA6010001	100 psia pressure sensor, Liquid helium supply line	Top plate Vertical test Dewar		
PT3322H	CA6010001	30 psia pressure sensor, helium dewar volume	Top plate Vertical test Dewar		
PT3323H	CA6010001	50 Torr pressure sensor, helium dewar volume	Top plate Vertical test Dewar		
PT3324V	CA6010001	Vacuum gage Pirani, guard vacuum volume	Top plate Vertical test Dewar		
PT3325V	CA6010001	Vacuum gage Pirani, insulating vacuum volume	Top plate Vertical test Dewar		
PT3326V	CA6010001	Vacuum gage, cold cathode, insulating vacuum space	Top plate Vertical test Dewar		
TT3309H	CA6010001	Temperature, Helium vessel wall below intercept 5K	Inside Vertical Test Dewar		
TT3310H	CA6010001	Temperature, Helium vessel wall at cold magnetshield, liquid level elevation	Inside Vertical Test Dewar		
TT3311H	CA6010001	Temperature, Bottom of helium vessel	Inside Vertical Test Dewar		
TT3312H	CA6010001	Temperature sensor, inlet side liquid helium supply to recovery heat exchanger	Inside Vertical Test Dewar		
TT3313H	CA6010001	Temperature sensor, outlet side liquid helium supply stream from recovery heat exchanger	Inside Vertical Test Dewar		
TT3314H	CA6010001	Temperature sensor, cooldown bottom fill line	Inside Vertical Test Dewar		
TT3315N	CA6010001	Temperature sensor below 80K intercept	Inside Vertical Test Dewar		
TT3316N	CA6010001	Temperature sensor on 80K intercept pipe	Inside Vertical Test Dewar		
TT3324H	CA6010001	Type K TC, Temperature sensor on helium vessel heater #1	Inside Vertical Test Dewar		
TT3325H	CA6010001	Type K TC, Temperature sensor on helium vessel heater #2	Inside Vertical Test Dewar		
TT3326H	CA6010001	Type K TC, Temperature sensor on helium vessel heater #3	Inside Vertical Test Dewar		

ATTACHMENT C. Equipment Description, Valves and Instrumentation and Control Logic

C. Equipment Description, Valves and Instrumentation and Control Logic

System overview

<u>System demand</u>
The total cryogenic load of the system is larger than the plant's capacity, hence the plant is not capable of keeping up with the steady state load when the cavities dissipate their dynamic loads.

The balance of the capacity is made up by using inventory from the 1000 gallon storage dewar. Thus the experiment is run for 6-8 hours and the inventory shifts from the 1000 gallon dewar to the 45,000 Gal gas storage tank. After the test is completed, the inventory is reliquefied back to the liquid storage dewar over a period of several days. During this time the cavities are not cooled and allowed to drift upward, intercept flow to the cavities is most likely still required to intercept the beam tube conduction heat leak.

2K mode:
In this mode all the helium supplied to the cryomodules comes back to the main compressor suction side, via the Kinney vacuum pump and 5K intercepts return.

Cryostat 4.5K mode:
In this mode flow from the cryomodules is returned to the cold end of the plant.

No cryostat mode
In this mode no flow from cryostat is returned to the cold end and no flow is returned from the Kinney pump. The suction pressure is allowed to rise limited by main helium compressor motor power draw.

C.1 Gas Management and Plant Capacity Control Logic

C.1.1 Plant capacity control

The plant's capacity will be set by the expander capacity and compressor discharge pressure and compressor flow.
However, compressor discharge will not be allowed to be dropped too much because of minimum margin on the oil demisters capability. The minimum discharge pressure low limit shall be set at about 14.6 atm (200 psig). The discharge pressure shall only be used as additional turndown.

Expander speed control
Controlling the expander speed will control the plant's capacity.
If there is demand

Load demand: Liquid storage Dewar level LT3313H
This is done by cascading other control parameters onto the control loop's speed high limit

Expander speed setpoint high limit
The following parallel source for turning down the speed high limit are:
Parallel sources:

1. Fixed high = 230 rpm is the high limit upper value
2. Plant's cold end pressure control when in " Cryostat 4.5K mode"
3. Discharge pressure
4. Suction pressure

C.1.2 Gas Management

Suction Pressure Control
Suction pressure will be controlled by by-pass valve H3301A.
Once all the compressor flow is swallowed by the plant, suction pressure will rise and the by-pass valve will be completely shut. This will only happen when the flow is coming back from the load is high or when the plant's expander speed is too high. The compressor flow through increases as the suction pressure increases and motor power draw increases.

Discharge pressure control
Make-up (mass–in) H3302A and pumpback (mass-out) H3300A control valves will be controlled by discharge pressure.
Mass-in valve will start to open when the discharge pressure drops below setpoint-0.5 deadband
Mass-out valve will start to open when the discharge pressure rises above setpoint+0.5 deadband
Deadband can be set to 0.4 atm

The minimum setpoint for the discharge pressure shall be 15 atm due to keep the oil removal system operating in the proper range.

[Note: If there is a failure of the mass-in valve or empty warm storage tank, the discharge pressure can drop if a net liquefaction load is present, since inventory cannot be made up.]

Joule-Thomson Transfer Loop flow control
The plant's JT transfer loop can either operate on the JT valve (JT-5 on 010604048) or with the wet-expander. The total cold end mass flow will vary depending on the plant loading and type of load. Control will be on temperature.

<u>Operation on JT valve</u>
The JT-5 valve is controlled off a temperature control loop based on TT658H, (20K Cold expander inlet temperature). The setpoint dictates how efficient the plant operates and this value can be changed if the operator knows how the plant is loaded (liquefaction versus refrigeration load). The optimum setpoint will be the following
Liquefaction mode: 18K
Refrigeration mode: 15K

<u>Operation on wet-expander</u>
The wet expander can be used if the flow to the subcooler/load is low, because the expander set is relatively large for the plant. This will the case during reliquefaction of warm gas from storage with the cryomodules load off. With the wet expander operational, all/most-of the JT loop flow will go through the wet expander. Control will be based on TT658H: the speed shall be adjusted to hold this temperature. The control action is reverse acting: Expander speed reduces on rising temperature.

High Pressure (HP) flow to sub-cooler
All the HP flow will exit plant bayonet 5 and will split to the wet-expander and to pressure control valve H3332A and onto the sub-cooler.

C.2 Plant Cold End Low Pressure Side (LP) Control

Because the operating and relief pressure of the cryostats are very low, the operating mode for the cryostats will dictate the plant's ***upper operating limit of the low-pressure-side*** **pressure at the cold end.**

Cryostat (4.5K) mode: When the cold vapor from any of the cryostats is returned to the cold end of the plant, the upper limit for the cryostat pressure is 3.5 psig. In this mode the vapor pressure is around 1.25 atm.

Cryostat 2K mode: The cryostat boil-off is returned to the Kinney vacuum skid via crossover valves for each cryostat. The only cold vapor returned is from the storage dewar and subcooler. The plant's cold end operating pressure can be higher in this mode. The compressor suction pressure can be increased is this mode also, leading to higher compressor flow, upto the point where the suction pressure of the main compressor is too high for the Kinney vacuum pump discharge side.

No Cryostat mode: Same as the Cryostat 2K mode except, the suction pressure is not limited by the Kinney pump.

Pressure control:
Process variable input: PT 606H (on 1660S plant)
Pressure control output: Cascade loop to the plant capacity control logic, engine upper speed limit.
When pressure increases, upper speed limit decreases

C.2.1 LN2 Precooling control

The plant can be operated without LN2 precooling, if there is a problem with the LN2 supply.
Then plant will run at approximately at half capacity in this mode.

LN2 control is done by maintaining a liquid level in the LN2 boiler using level control loop on LN2 fill valve N8100A (on dwg 010604048) of DPT8090N.

C.2.2 HX Balancing Control Temperature Control TIC-5

H9904A is a 2 way flow control valve that splits the main compressor flow between the main heatexchanger (HX2500) and the LN2 precooler recovery heatexchanger (HX2605). Temperature control loop monitoring HX2605 nitrogen vapor exit temperature TT652N will control the flow split to maintain this temperature. The flow to heat exchanger heatexchanger (HX2605) needs to increase when temperature TT652N drops.

C.2.3 Wet Expander Operation

The wet expander can to be operated ***instead*** of the JT valve. Joule-Thomson loop flowrate will be set by the wet-expander throughout. The control would still be off the same temperature control loop, as the JT valve, except the turn down is limited to the minimum brake capacity of the DC brake. When the process control temperature warms-up too much, the Joule Thomson loop flow cannot be reduced any further, the wet expander has to be turned off.

See section on Joule Thomson loop flow for control loop.

The temperature setpoint for operating with wet expander will shift upward (warmer) by approximately 2K.

C.2.4 Other valves on the 1660S Cryoplant Coldbox

C.2.4.1 Cold Vapor Return H9919A H9916A

H9919A (T> 10K) Open this valve to return cold vapor flow from bayonet BC-3 to the plant's internal cooldown line.

H9916A. (T<5K) Open this valve to return cold vapor flow from bayonet BC-3 to the 4.5K end of HX2504 (E34).

B.2.4.2 Cold Vapor Return H9918A H9915A

H9918A (T> 10K) Open this valve to return cold vapor flow from bayonet BC-4 to the plant's internal cooldown return line.

H9915A. (T<6K) Open this valve to return cold vapor flow from bayonet BC-4 or BC-3 (crossover using H9919A) to the 7K (warmer) section of HX2504 (E34).

C.2.4.3 JT Flow Isolation H9912A

Isolation valve downstream of Valve JT5

C.2.4.4 Cross-over valve H9909A

This provides high pressure 5K helium to BC-5 to supply high pressure helium to the system, subcooler.

C.2.4.5 Isolation valve H9911A

Isolation valve for BC-5.

C.2.4.6 Cooldown supply valve H9906A

This provides high pressure 60-80K helium to BC-5 to supply high pressure helium for cooldown of cryomodules or test dewar. The supply pressure is knocked down by valve H3332A located in the transferline system.

C.2.4.7 The Overspeed Safety Device

The Overspeed Safety Device consists of a spring loaded pin built into the flywheel and a switch mounted on the cover plate. This prevents the engines from overspeeding in the event the alternator does not act as a brake e.g., belt or alternator failure). Centrifugal force compresses the spring and allows the pin to move beyond the outer circumference of the flywheel. When the engine speed reaches approximately 350 rpm, the pin will protrude from the flywheel enough to trip the switch. The switch, when opened, causes the gas supply solenoid valve **H9903A** (V323) to close and **H9845A** (V330) to open (valves must be in auto), shutting off gas supply and venting the HX pressure to atmosphere. This allows the engines to coast to a stop and energizes TRIP pilot light on the control panel. After the cause of overspeeding has been corrected, the switch must be reset manually using the tool provided (P/N B3824375).

To reset the switch: push away from you, or towards the flywheel.
To trip the switch, pull towards you, away from the flywheel.

C.3 Large 40 inch diameter Vertical Test Dewar

C.3.1 Level Control Valve H3512A (Liquid helium supply)

This will liquid control level by controlling the supply helium delivered from the cryoplant/storage dewar via refrigeration recovery heat exchanger HX.
Because the vacuum pumping system does not have unlimited capacity, there will be a cascade loop to close the fill valve when the desired operating pressure is exceeded. The system has the largest peak 2K cooling capacity when there is no flow from the fill (level) valve, which means during this mode the liquid inventory is drawn down.
During filling the net cooling capacity will be reduced, thus filling can only occur when there is no dynamic load dissipation from the cavity.

Process variable: Level sensor LT3317H
Action: *Reverse*. Open valve on decreasing level
High limit for valve opening: Cascade loop from bath pressure and Vapor return valve H3512A has reached greater than 90%open position.

Cascade loop: decreases the high limit for the valve position opening with increasing bath pressure

C.3.2 Helium Bath Pressure Control Valve H 3320A

(H3320A Sub-atmospheric to Kinney) / H3322A (on/off1.2 atm, 4.4K return to 1660S plant)

The valve would be fully open once the vacuum pump has been fully loaded.
The vapor return valve will be on pressure control loop of the bath pressure sensor.
Process variable: Pressure PT3323H

Action: Direct. Open valve on increasing pressure.

LOW LIMIT for valve opening: XX%
HIGH LIMIT for valve opening: XXX%

C.3.3 Bottom fill Control Valve H3513A

Operator controlled.
LOW LIMIT for valve opening: XX%
HIGH LIMIT for valve opening: XXX%

C.3.4 Warm helium supply

H3512A and H3522M, (H3523A, not installed)
This is a solenoid operated valve in series with a metering valve.

C.3.5 Liquid helium supply H3327A (located in valvebox)

Temperature controlled mode
This valve will be used to control cooldown of the Test dewar.
The temperature setpoint to this loop shall be ramped at an operator settable rate (e.g. 30K/hr)
Process variable: Temperature sensor TT3314H
Action: Direct. Open valve when temperature is higher than setpoint.

LOW LIMIT for valve opening: XX%
HIGH LIMIT for valve opening: XXX%

C.3.6. Warm nitrogen supply N3342A

This is a solenoid operated valve in series with a metering valve.
Operator controlled.
Used to dry out the helium volume using GN2 before Helium pump and purge, and cooldown
This can also be used to warmup the test dewar after the dewar has been warmed to 100K.

C.3.7 LN2 shield temperature control N3315A

Valve N3315A will also be used for cooldown of the shield and intercept on the helium vessel.
LN2 supply valve N3315A is located outside the VTD blockhouse.
The shield shall be flooded using temperature control loop on TT3316N.
The
Valve position
HILIMIT: user settable

C.3.8 5K intercept flow control (MKS Mass flow controller, 84 SLPM, not installed)

For sub 2K temperature operation of the dewar, the intercept flow can be turned on to reduce the heat leak to the bath by 6W.

C.3.9 Instrumentation

<u>Pressure 40 inch Dewar bath (PT3323H, 50 Torr)</u>
Alarm: High
Setpoint: 30 Torr (Lambda point pressure)

<u>Pressure 40 inch Dewar bath, (PT3322H 30 PSIA)</u>
Alarm: High
Setpoint: 18.7 psia (close to relief pressure warning)

<u>Pressure Liquid helium supply, (PT3321H 100 PSIA)</u>
Alarm: High
Setpoint: 65 psia (5 atm)

LT3318H
Alarm: HIGH
Setpoint: 95% (overfill alarm)
Alarm: LOW
Setpoint: 5% (low level alarm), depends on test article.

TT3315N (On vessel, below heat station LN2 channel)

TT3316N (On vessel heat station LN2 channel)
This will be used for control of LN2 shield/heat station with valve N3315A.

TT3309H (Below 5K heat station intercept coil)
TT3310H (Middle of liquid level helium vessel)
TT3311H (Bottom of liquid helium vessel near heater)
TT3312H (Ref Recovery HX high side inlet)
TT3313H (Ref Recovery HX high side outlet / JT valve inlet)
TT3314H (Cooldown line supply temperature)

C.4 5- Cell (eCX) Cavity Cryostat

C.4.1 Level Control Valve H3353A

This will liquid control level by controlling the supply helium delivered from the cryoplant/storage dewar via refrigeration recovery heat exchanger HX3301. Because the vacuum pumping system does not have unlimited capacity, there will be a cascade loop to close the fill valve when the desired operating pressure is exceeded. The system has the largest peak 2K cooling capacity when there is no flow from the fill (level) valve, which means during this mode the liquid inventory is drawn down.
During filling the net cooling capacity will be reduced, thus filling can only occur when there is no dynamic load dissipation from the cavity.

Process variable: Level sensor LT0124H/LT0126H
Action: *Reverse*. Open valve on decreasing level
High limit for valve opening: Cascade loop from bath pressure and Vapor return valve H3343A has reached greater than 90%open position.

Cascade loop: decreases the high limit for the valve position opening with increasing bath pressure

C.4.2 Helium Bath Pressure Control Valve H3343A

The valve would be fully open once the vacuum pump has been fully loaded.
The vapor return valve will be on pressure control loop of the bath pressure sensor.
Process variable: Pressure PT8461H

Action: Direct. Open valve on increasing pressure.

LOW LIMIT for valve opening: 12%
HIGH LIMIT for valve opening: 100%

C.4.3 Cooldown/bottom fill Valve H3354A

The cooldown valve will be manually controlled by the operator.
There shall be a valve position HIGH LIMIT to prevent the operator from inadvertently opening the valve too much. (i.e. The high limit has to work when the valve is in manual mode)

C.4.4 Vapor space Cross-over valve H3533A

This valve will be manually operated by the operator.
Open this valve after (using) the cooldown valve H3354A is closed.

C.4.5 Instrumentation

Pressure 5-cell ballast tank bath (PT8461H, 50 Torr)
Alarm: High
Setpoint: 30 Torr (Lambda point pressure)

Pressure 5-cell ballast tank bath, (PT8454H 30 PSIA)
Alarm: High
Setpoint: 18.7 psia (close to relief pressure warning)

LT0124H/LT0126H Liquid level 550 L ballast tank
Alarm: HIGH
Setpoint: 95% (overfill alarm)
Alarm: LOW
Setpoint: 5% (low level alarm)

LT0125H/LT0127H Liquid level cavity helium vessel
Alarm: LOW
Setpoint: 75% (low level alarm) and MPS interlock signal

C.4.6. Mass Flow Controllers

Mass flow controllers control the 5K circuit heat intercepts.

C.4.7. Fundamental Power Coupler Window Heater

C.4.8 MACHINE PROTECTION INTERLOCK CHAIN 5-CELL CAVITY

The machine protection interlock chain will trigger a relay that is tied to machine protection system.

The following are process variable that shall be operator adjustable:

Liquid level reservoir LT0125H low limit
Beamtube end flange TE2028H High limit
Tunerside end flange TE1123H High limit
FPC#1 cold end flange TE2029H High Limit

Anyone of the above trips will trigger the CRYOSTATUS interlock to machine protection.

C.5 ERL 704MHz SRF Gun Cryostat and valvebox System

General description:
The superconducting RF gun is enclosed in a helium vessel and is connected to an approximately 150 Liter reservoir via a 3 inch line. The cavity system has a low design pressure of 23 psia or 8

psig. The burstdisk is set at 8 psig with a relief valve at 5 psig. Care should be taken during cooldown to keep the pressure in the cavity helium volume below the 5 psig relief pressure. The recommended method is to run the sub-atmospheric pumping system, with just the liquid ring pumps during cooldown.
There system has a liquid helium top fill valve and bottom fill/cooldown valve, a refrigeration recovery heat exchanger and vapor return control valve. The cryostat has liquid nitrogen cooled thermal shield supplied by a liquid nitrogen control valve.

C.5.1 Level Control Valve H1405A

This will liquid control level by controlling the supply helium delivered from the cryoplant/storage dewar via refrigeration recovery heat exchanger HX3300.

Because the vacuum pumping system does not have unlimited capacity, there will be a cascade loop to close the fill valve when the desired operating pressure is exceeded. The system has the largest peak 2K cooling capacity when there is no flow from the fill (level) valve, which means during this mode the liquid inventory is drawn down.

During filling the net cooling capacity will be reduced, thus filling can only occur when there is no dynamic load dissipation from the cavity.

Process variable: Level sensor LT0400H A/B
Action: *Reverse*. Open valve on decreasing level
High limit for valve opening: Cascade loop from bath pressure and Vapor return valve H3342A has reached greater than 90% open position.

Cascade loop: decreases the high limit for the valve position opening with increasing bath pressure

C.5.2 Helium Bath Pressure Control Valve H3342A

The vapor return valve will be on pressure control loop of the bath pressure sensor.
Process variable: Pressure PT1400H
Action: Direct. Open valve on increasing pressure.
LOW LIMIT for valve opening: 12%
HIGH LIMIT for valve opening: 100%

C.5.3 Cooldown/bottom fill Valve H1404A

The cooldown valve will be manually controlled by the operator.
There shall be a valve position HIGH LIMIT to prevent the operator from inadvertently opening the valve too much. (i.e. The high limit has to work when the valve is in manual mode)

C.5.4 Vapor space Cross-over valve H3535A

This valve will be manually operated by the operator. The valve serves allow vapor on the cooldown supply line to vent the boil off on the supply side of this cooldown line. This will prevent a trapped volume from building a vapor bubble and pusing back through the superfluid bath at the bottom of the cavity helium vessel at the cooldown inlet.
Open this valve after (using) the cooldown valve H1404A is closed.

C.5.5 LN2 Cooled Thermal Shield Control valve N3303A

A control valve supplies liquid nitrogen from the main LN2 feed to the thermal shield of the SRF Gun cryostat. The valve will be temperature controlled off sensor TE403N.

C.5.6 Instrumentation

Pressure SRF Gun Reservoir (PT1400H, 50 Torr)
This will also be used to control the vapor back pressure valve H3342A.
Alarm: High
Setpoint: 30 Torr (Lambda point pressure)

Pressure SRF Gun Reservoir (PT1401H 30 PSIA)
Alarm: High
Setpoint: 18.7 psia (close to relief pressure warning)

LT400H A/B
Measures helium liquid level in the
Alarm: HIGH
Setpoint: 95% (overfill alarm)
Alarm: LOW
Setpoint: 5% (low level alarm)

C.5.7 5K Intercep circuits Mass Flow Controllers

Five MKS mass flow controllers, operating at room temperature, control the following 5K intercept flows through the following devices. The intercepts get the 5K, 3 atm helium from the subcooler, the same flow that goes to the cavity.

Devices	Flow indication	Flow setpoint
HTS Solenoid	FE3318H	H3544E
FPC-1	FE3317H	H3543E
FPC-2	FE3316H	H3542E
End flange upstream	FE3315H	H3541E
End flange downstream	FE3314H	H3540E

C.5.8 Fundamental Power Coupler Window Heaters

Each 500 kW power coupler windows feedthrough is kept at room temperature by redundant electric Kapton sheet heaters: HTR-408 and HTR-409
Each heater is controlled by a temperature controlled loop using RTD mounted next to the heater and on the window.
Heater indicator controller, HIC-408, will control HTR-408 using TE-426H.
Heater indicator controller, HIC-409, will control HTR-409 using TE-427H.

C.5.9 Boil-off Heater HTR-400

A 50 W boil-off heater mounted at the bottom of the cavity helium vessel, can be turned on to boil-off any liquid for shutdown. The operator can set the duty factor. Temperature sensor TE410H is set to trip the heater off when a high limit has been reached.

C.5.10 MACHINE PROTECTION INTERLOCK CHAIN SRF GUN CAVITY

The machine protection interlock chain will trigger a relay that is tied to machine protection system.

The following are process variable that shall be operator adjustable:

Liquid level reservoir LT400H low limit
Beamtube end flange TE413H High limit
Tunerside end flange TE400H High limit
FPC#1 cold end flange TE411H High Limit
FPC #2cold end flange TE412H High Limit
Cathode Cooling loop Low flow or Low liquid level

Anyone of the above trips will trigger the CRYOSTATUS Interlock to machine protection.

C.6 Cold Cathode Cooling Loop

The cold cathode is cooled by a liquid nitrogen loop. Heat transfer is by forced convection nucleate boiling. To supply good quality liquid, a small phase separator is used to separate liquid from the LN2 main line. The liquid is then delivered to the cathode tip and return for venting. The returned 2-phase liquid nitrogen is heated to evaporate all the liquid before venting. Supply pressure to the cathode loop is maintained by back pressure control valve N3310A. Liquid supply into the phase separator is controlled by level control valve N3307A.

C.6.1 Liquid level Control Valve N3307A

Process variable: Level sensor and controller LIC3300N
Action: *Reverse*. Open valve on decreasing level
High limit for valve opening: 90% TBD.

C.6.2 Pressure Control Valve N3310A

Process variable: Pressure sensor PT3320N and PID loop PT3320N
Action: *Direct*. Close valve on decreasing pressure level
High limit for valve opening: 100%.
Setpoint: 15 psig

C.6.3 Heater HTR-423

The vent heater is controlled by an independent panel mounted controller. One sensor is used for heater control and the other sensor that is built into the heater sheet, is used as the overtemp switch. The heater power will be controlled to vaporize all the LN2. Temperature is controlled with **TT3307N** at 90K

C.6.4 Instrumentation

C.6.4.1 Pressure Phase Separator (PT3320N, 100 psia)

Alarm: High Setpoint: 45 psia

C.6.4.2 Temperature: Cathode supply: TT3302N

Monitors supply temperature to cathode stalk.
Should read saturation temperature of phase separator.

C.6.4.3 Temperature: Cathode Return: TT3301N

Monitors return temperature from cathode stalk.
Should read saturation temperature of return 2 phase flow

C.6.4.4 Temperature: Heater exit: TT3307N

Vaporizes all the liquid and should read just superheated, 90K gas.

If you are using a printed copy of this procedure, and not the on-screen version, then you MUST make sure the dates at the bottom of the printed copy and the on-screen version match.
The on-screen version of the Collider-Accelerator Department Procedure is the Official Version.
Hard copies of all signed, official, C-A Operating Procedures are available by contacting the ESSHQ Procedures Coordinator, Bldg. 911A

C-A OPERATIONS PROCEDURES MANUAL

18.8.1.1 Procedure for ECX Fast and Slow Tuner

Text Pages 2 through 8

Hand Processed Changes

HPC No.	Date	Page Nos.	Initials

Approved: ***Signature on File*** _____
Collider-Accelerator Department Chairman Date

C. Pai

18.8.1.1 Procedure for ECX Fast and Slow Tuner

1. Purpose:

The purpose of this procedure is to provide instructions to the operator of the fast and slow tuner of the ECX Superconducting RF cavity. This tuner is an electro-mechanical system. It consists of two separate functioning tuners, fast tuner by Piezo Drive and slow tuner by Stepping Motor. It is installed inside the ECX cryostat. It will be operated during ECX Cold Emission Test to tune the frequency of RF cavity.

2. Responsibility:

2.1 The tuner is a subsystem of the ECX 5 cell superconducting RF cavity. The operator of the tuner should follow the directions of the coordinator of ECX cold emission test to operate this tuner to change the frequency of RF cavity as required.

2.2 The operator should be familiar with the tuner mechanism and specification before operation. The tuner mechanism and specification are provided as an attached document in this procedure.

3. Prerequisites

Training

- The operator shall have the following valid training as minimum
- TQ-ELECSAF1, Electrical safety I
- HP-OSH-151B-W, Lock Out/Tag Out- Authorized

4. Precautions

4.1 The tuner operates by physically stretching the length of the 5 cell cavity to change RF frequency. The operation of the tuner shall be as smooth as possible and do not apply unnecessary stress on the RF cavity.

4.2 The tuner is installed on the cold body of RF cavity. During operation, motor and piezo drive will generate heat. The generated heat will be dissipated by conduction. The operator shall monitor the temperature of the tuner system, so there is no build up heat from the tuner to affect the performance of the superconducting RF cavity. The maximum allowable temperature of tuner system is room temperature. But if temperature rise in the RF cavity is higher than desired, the tuner should be stopped and kept cooler than this point, so it won't affect the performance of the RF cavity.

4.3 In order to operate in vacuum environment and cryogenic temperature, Dicronite Coating was used as dry lubricant in all sliding and rotating surfaces of the tuner drive system. To prevent quick depletion of the dry lubricant, the operation of the tuner shall be limited to only as needed.

5. Procedure

5.1 Coarse tune:

a. When RF cavity system is cold and ready, set the stepping motor running parameters as described in the paragraph 1.6 of the attached Tuner Mechanism and Specification.

b. Zero the motor step count to indicate the initial position.

> **Note:**
> The initial position is the tuner installed position and is no load

c. When tuner is needed to tune the RF cavity, run the motor by sending the exact number of pulses to actuate the tuner. The tuning coefficient is 0.21 Hz per each quarter step.

d. For each continuous motor run, limit the total quarter step number of pulses to no more than 185,200 pulses or 40.5 KHz. After each run let the motor rest about 10 minutes for cool down. The running time for 185,200 quarter steps is about 46.3 seconds. The temperature rise rate of the motor is about 5°K per minute run. The maximum operating temperature of the motor is 300°C. This motor relies on dry lubrication. For better performance give the motor enough time to cool and get a more uniform temperature distribution.

e. When the RF cavity reaches its frequency, stop the motor and keep the motor in this step count. The tuner system has self locking capability and will keep the RF in this frequency.

f. Repeat procedure steps c to e when tuning is needed.

g. The full range of the coarse tune is 0 to 740,800 quarter steps or 0 to 162 KHz. Two limit switches were installed to set the upper and lower bound of the tuner motion.

h. Return the tuner to its initial position before cavity system warm up.

5.2 Fine Tune:

a. When cavity system is cold and ready, zero the piezo driver voltage to indicate the initial position.

> **Note:**
> The initial position is the free state of Piezo drive with no load

b. The piezo drive fine tuner is independent of coarse tune. When fine tune is needed, drive the piezo drive by applying the needed voltage as shown in the piezo chart in paragraph 1.8 to change the RF cavity frequency. The piezo uses a set of capacitors to maintain the tuning force voltage. The voltage has to be applied constantly to retain the frequency.

c. The full range of the fine tune is 0 to 1000 Volt. or 0 to 2080 Hz.

d. When micro phonic compensation is needed a wave generator with the needed frequency and voltage can be applied to drive the piezo drive.

e. Return the piezo drive to its initial position before the cavity system is warmed up.

6. Documentation

None

7. References

7.1 Drawing #010601259, ECX RF TUNER ASSEMBLY.

7.2 Phytron Extreme Environment Stepping Motor Spec and Parameters,
Type: VSS57.200.2.5-space-KTC-K1
Manufacturer: Phytron Inc.
Tel. 802-872-1600 x1110
www.phytron.com

7.3 Harmonic Drive Spec and Parameters.
Type: Harmonic drive is HDC-014-100-2A-SP2413
Manufacturer: Harmonic Drive LLC
Tel: 978 573-3420
www.harmonicdrive.net

7.4 Piezo Drive Spec and Parameters:
Type: PSt 1000/25/300 VS 35
Manufacturer: Piezomechanik GmbH
Phone: +49 (0)89-431-5583
www.piezomechanik.com

8. Attachment:

Tuner Mechanism and specification

1. Tuner Specification

1.1 Tuner mechanism:

The ECX tuner mechanism is a double lever linkage which combines two stages of mechanical leverage to gain force advantage. The tuner pulls the RF cavity to change its length. When RF cavity length changes the RF frequency changes too. This tuner is self locking. It can stay in any position within its operational range. (DWG: 010601259)

1.2 Tuner leverage ratio:
a. First stage: 2.28
b. Second Stage: 7.5
c. Total leverage: 14.5

1.3 Tuning range:
a. Fundamental RF mode: 703.75 MHz.
b. Stiffness of RF cavity: 39,000 lb/in
c. Tuning coefficient: 100 Hz/μm.
d. Tuning range: 0 to 162 KHz (one side)

Note:
This range is limited by the strength of RF cavity which has to meet the ASME Pressure vessel code VIII requirement.

e. Max. Mechanical stretching of RF cavity: 1.63 mm

Note:
At 1.63 mm stretching, the maximum stress in the cavity is 4000 psi, less than 2/3 of yield strength of niobium.

f. Max. Stroke of tuner drive: 23.5 mm (.926”)

1.4 Method of RF cavity tuning

a. Coarse tune:

A stepping motor/ACME thread drive system is used in the second stage of the tuner to drive the RF cavity to change its full range frequency. The coarse tuner uses the full mechanical advantage, R=14.5, to tune the RF cavity and is controlled by counting the pulses of stepping motor to move the tuner mechanism.

b. Fine tune:

A piezo drive system is installed in the first stage to provide fine tune and microphonic compensation. The tuning range of the piezo drive is 20 μm or 2000 Hz. The piezo drive is controlled by applying electric voltage. Fine tune is independent from coarse tune. It can be operated in any coarse tune position to do fine tune of the cavity frequency.

1.5 Coarse tuner specification:

a. Mechanical advantage: 14.5

b. Drive system:
Stepping motor: 200 step/rev
Harmonic reducer: 100:1
ACME screw size: ½”-10 (10 threads per inch)

c. Maximum Driving force at full tune:
Pulling Force at RF cavity: 2503 lb @ 1.63 mm stretching.
Thrust Force at ACME power nut: 172 lb. @ 23.6 mm stroke

d. Motion relation:
Leads per motor step:
Motion in ACME drive: 5.0×10^{-6}in.
Stretch in RF cavity: 8.758×10^{-3} μm.

e. Tuning coefficient: 0.87Hz/motor step
(If motor runs in ¼ steps, the tuning coefficient is .21 Hz/quarter step)

1.6 Speed of coarse tuning and motor parameters:

a. Motor speed: 300 rpm. (3 rpm @ ACME screw)

b. Motor acceleration: 37.5 rpm/sec

c. Voltage: 40 V

d. Current: 1.7 AM

e. Step size: 1/4 (quarter step)

f. Running current limit: 2.0 AM.

g. Total required step in full tuning:
For full step: 185,200 step for 162 KHz tuning.
For quarter step: 740,800 step for 162 KHz tuning.

h. Time needed for full tuning range: 3 min. 5.2 sec.

i. Operating environment: The whole tuner system operates in vacuum and cryogenic environment. The motor temperature raises about 5 ^{o}K in each minute of operation. It cools down about 1.2 ^{o}K in every 10 min. It is recommended to run the rotor no longer than a minute in each operation then let it cool down at least 10 minutes before restart. The maximum allowable temperature of tuner system is room temperature. But if temperature rise in the RF cavity is higher than desired, the tuner should be stopped and kept cooler than this point, so it won't affect the performance of the RF cavity.

1.7 Fine tuner specification:

a. Mechanical advantage: 2.28

b. Drive type: Piezo drive.

c. Maximum Driving force at full tune: (20 μm or 2000 Hz @ RF cavity)
Pulling Force at RF cavity: 30 lb @ 20 μm stretching.
Thrust Force at Piezo drive: 14 lb. at 45.6 μm stroke

1.8 Tuning control of Piezo drive (Fast tune):

a. Piezo driver: The piezo is driven by voltage from 0 to 1000 Volt.

b. The following table shows the relationship of applied voltage and tuning frequency:

Note:
This relationship is derived by strain gage reading in a room temperature test. In the cold temperature this number may reduced by factor of 5 to 10. This table uses reduction factor of 5 for reference

Voltage	Stain Gage reading (mu)	Applied force lbs	Frequency Change, Hz
0	418	0.0	0.0
100	419	1.6	104.2
200	421	4.8	312.6
300	422	6.4	416.8
400	424	9.6	625.2
500	426	12.8	833.6
600	428	16.0	1042.1
700	430	19.2	1250.5
800	433	24.0	1563.1
900	435	27.2	1771.5
1000	438	32.0	2084.1

1.9 Tuner monitoring devices:

a. Linear Variable Differential Transformer LVDT

A calibrated LVDT (SM-3) is installed to provide direct readout of the stretching of the RF cavity. The frequency change of cavity can be calculated by tuning coefficient, 100 Hz/ μm.

ΔHz=Tuning coefficient X stretching

Where Tuning coefficient is 100Hz/μm

Stretching is in μm.

b. Two strain gages, one each in the flex link, will provide the micro strain in the flex link. The tuning force being applied to the RF cavity can be calculated by this micro strain.

Force (lb) = gage number x A x micro strain x Young's modulus

= 8 x micro strain

Where gage number is 2 gages.

A=.25 in^2 (flex link cross section area).

Micro strain is the read out from strain gage.

Young's modulus is 16 for titanium (the 10^6 factor is canceled with micro strain).

c. Tuner frame temperature monitoring:

Three thermal diodes were installed in the tuner frame for temperature monitoring.

d. Stepping motor temperature monitoring:

The motor has a built in thermal couple for temperature monitoring.

If you are using a printed copy of this procedure, and not the on-screen version, then you MUST make sure the dates at the bottom of the printed copy and the on-screen version match.
The on-screen version of the Collider-Accelerator Department Procedure is the Official Version.
Hard copies of all signed, official, C-A Operating Procedures are available by contacting the ESSHQ Procedures Coordinator, Bldg. 911A

C-A OPERATIONS PROCEDURES MANUAL

18.8.1.2 Procedure for Turning on the 50KW RF Amplifier in ERL

Text Pages 2 through 3

Hand Processed Changes

HPC No.	Date	Page Nos.	Initials

Approved: ***Signature on File*** _____
Collider-Accelerator Department Chairman Date

N. Laloudakis

18.8.1.2 Procedure for Turning on the 50KW RF Amplifier in ERL

1. If wave guide is connected to the Cavity, follow sweep procedure.

2. If the wave guide is not connected to the cavity, verify that the wave guide has its end cap bolted on and red tagged.

3. Ask Pump room personnel to turn water system on.

4. Portable Water Chiller [PA Circulator Cooling].
    a. Check the water level in reservoir.
        i. Fill with distilled water if necessary.
    b. Turn on portable water chiller.

5. Verify that the wave guide has its end cap bolted on.

6. Turn on the 480VAC for the RF Amplifier.
    a. This requires category 4 PPE.
    b. Turn on breaker IG43 breaker #11 label V1 Transmitter.

7. Water manifold behind RF Amplifier.
    a. Valve on the IOT water flow.
    b. Valve on the Dummy Load water flow.
    c. Valve off the bypass.

8. RF Amplifier Breakers.
    a. Turn on HVPS Switch.
    b. Turn on LV AC Transformer breaker.
    c. Turn on Cavity Blower breaker.
    d. Turn on Driver breaker.
    e. Turn on Cabinet Fan breaker.
    f. Turn on Crowbar breaker.
    g. Turn on Bias / Htr PS breaker.
    h. Turn on Focus PS breaker.
    i. Turn on Control Power breaker.

9. Starting filament power [HPA Start Mode].
    a. Locate HPA Controller – HPA start mode select button and press.
    b. Wait for “Ready – No interlocks on HPA Start Mode Panel” before continuing to step 9.

10. Turning on anode voltage [Beam Mode].
    a. Locate HPA Controller – Beam Mode select button and press.
    b. Verify the HV Beam Voltage meter goes to ~ 32KV.

11. Test the crowbar circuit.
    a. Locate HPA Controller – HPA start mode select button and press.
    b. Monitor HV Beam Voltage meter slowly bleeding down.
    c. Wait until HV Beam Voltage meter gets to 10KV.
    d. Locate HPA Controller – Crowbar button and press and monitor HV Beam Voltage meter.
        i. If meter continues to slowly bleed down to zero – Crowbar failed – DO NOT OPERATE UNIT.
        ii. If meter quickly goes down to zero volts then crowbar works – continues to step 11.

12. Turning on anode voltage [Beam Mode].
    a. Locate HPA Controller – Beam Mode select button and press.
    b. Verify the HV Beam Voltage meter goes to ~ 32KV.

13. Turning on RF Drive section [RF Drive Mode]
    a. Verify that RF drive source is off.
    b. Locate HPA Controller – RF Drive Mode select button and press.
    c. Verify RF drive power supply and LED 1 thru 6 LED's illuminates.

14. RF Drive – Function generator [Agilent E4423B].
    a. Set Frequency to 703.5MHz
    b. Set Output Power to 0dBm.
    c. Enable Output.

15. Test Arc Dector.
    a. Locate the Arc detector and press the test button.
    b. Verify the RF drive has been inhibited.

16. Turning on RF Drive section [RF Drive Mode]
    a. Verify that RF drive source is off.
    b. Locate HPA Controller – RF Drive Mode select button and press.
    c. Verify RF drive power supply and LED 1 thru 6 LED's illuminates.

17. RF Drive – Function generator [Agilent E4423B].
    a. Set Frequency to 703.5MHz
    b. Set Output Power to 0dBm.
    c. Enable Output.

18. Running the system.
    a. Monitor HV Beam Current meter.
    b. Increase the RF generator output until we get 2 Amps on the HV Beam Current meter.
    c. Adjust output as necessary to keep meter at 2 Amps.

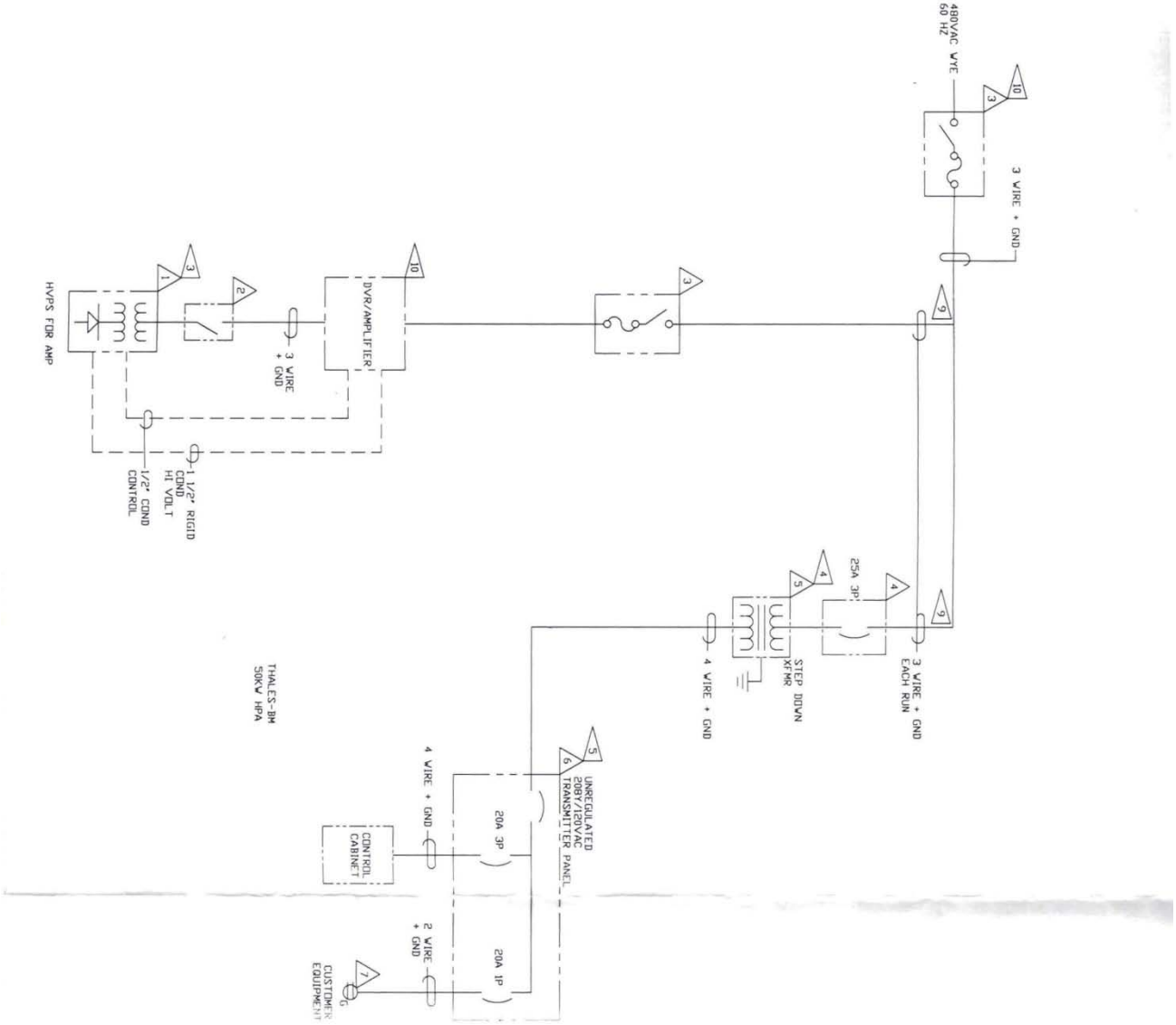
480VAC WYE
60 HZ
3 WIRE + GND
3 WIRE + GND
EACH RUN
25A 3P
STEP DOWN
XFMR
4 WIRE + GND
UNREGULATED
208Y/120VAC
TRANSMITTER PANEL
20A 3P
20A 1P
4 WIRE + GND
2 WIRE
+ GND
CONTROL
CABINET
CUSTOMER
EQUIPMENT
THALES-BM
50KV HPA
DVR/AMPLIFIER
3 WIRE
+ GND
1 1/2" RIGID
COND
HI VOLT
1/2" COND
CONTROL
HVPS FOR AMP

If you are using a printed copy of this procedure, and not the on-screen version, then you MUST make sure the dates at the bottom of the printed copy and the on-screen version match.
The on-screen version of the Collider-Accelerator Department Procedure is the Official Version.
Hard copies of all signed, official, C-A Operating Procedures are available by contacting the ESSHQ Procedures Coordinator, Bldg. 911A

C-A OPERATIONS PROCEDURES MANUAL

18.8.1.3 Procedure for Testing the ERL Klystron Power Supply

Attachment

Text Pages 2 through 3

Hand Processed Changes

HPC No.	Date	Page Nos.	Initials

Approved: _____***Signature on File***_____ _____
Collider-Accelerator Department Chairman Date

R. Lambiase

18.8.1.3 Procedure for Testing the ERL KlystronPower Supply

1. Purpose

This procedure provides instructions to operate the ERL power supply under the following test conditions:

1.1 HV Load - The high voltage load will be a resistive test load as supplied by the manufacturer of the transmitter and power supply. This load will simulate both the klystron and klystron filament. The resistance of the high voltage load is approximately 25 MOhm, resulting in 4 mA of current at 100 kV. The filament load is approximately 1 Ohm. Because this resistive load is used, there will be no radiation produced from the klystron.

1.2 Active Klystron Connections - The following parts of the klystron will be energized during the test: water circuits, interlocks, solenoid magnets, temperature sensors, window blowers, and VacIon pumps.

2. Responsibilities

One of the five system experts, N. Laloudakis, S. Deonarine; J. Butler; R. Lambiase or A. Zaltsman, will be present during the testing as described in this procedure. One of the system experts must perform the Group LOTO of the switchgear.

3. Prerequisites

Prior to performing this procedure, all the requirements of the “MCR Check List” must be satisfied.

4. Precautions

The Kystron transmitter and power supply is a high voltage, high power system.

5. Procedure

5.1 Visually inspect the secondary containment area of the filter and high voltage tanks for leaks. If there is any evidence of leaks, call x2222, and do not continue with this procedure.

5.2 Visually inspect the secondary containment area of the test load. If there is any evidence of leaks, call x2222, and do not continue with this procedure.

5.3 If either area has been opened, insure that a sweep is performed of the klystron enclosure and the transformer room as per ERL Klystron System Sweep Checklist Procedure, 18.8.1.3.a.

5.4 TURN ON PROCEDURE

Class 2 PPE required for all work performed at switchgear

a) At the **User Interface Unit 1-A1,** energize the transmitter PLC, and check for any power supply interlock faults.
b) On the switchgear, remove the Group LOTO on the **Grounding Switch**.
c) On the switchgear, move the **Grounding Switch** to the OPEN position**.**
d) On the switchgear, move the **Connecting Switch** to the CLOSE position.
e) On the switchgear, move the **Circuit Breaker Control Switch** to the ON position, the red lamp should light.

5.5 Operate the transmitter and perform tests.

5.6 TURN OFF PROCEDURE

Class 2 PPE required for all work performed at switchgear

a) On the switchgear move the **Line Voltage/Load Voltage** switch to position #2
b) Using the meter on the switchgear and the **Phase Voltage Selector** switch verify that each phase indicates 4160 VAC.
c) Shut off the High Voltage at the **User Interface Unit 1-A1**.
d) Using the meter on the switchgear and the **Phase Voltage Selector** switch verify that each phase indicates 0 VAC.
e) On the switchgear move the **Circuit Breaker Control Switch** to the TRIP position. Verify the green light goes on.
f) On the switchgear move the **Connecting Switch** to the OPEN position. Visually verify that the disconnect blades have disengaged. On the switch gear.
g) On the switchgear, move the **Grounding Switch** to the CLOSE position.
h) Place the Group LOTO Lock on the **Grounding Switch**, place key in ERL Lockbox. Personnel working on the system are to hang their LOTO locks on the Lockbox.

6. Documentation

6.1 The MCR Check List for klystron transmitter and HVPS testing.

6.2 The sweep procedure for the klystron enclosure and transformer room.

7. References

None

8. Attachments

8.1 C-A-OPM-ATT 18.8.1.3.a, “ERL Klystron System (912) Sweep Checklist”.

If you are using a printed copy of this procedure, and not the on-screen version, then you MUST make sure the dates at the bottom of the printed copy and the on-screen version match.
The on-screen version of the Collider-Accelerator Department Procedure is the Official Version.
Hard copies of all signed, official, C-A Operating Procedures are available by contacting the ESSHQ Procedures Coordinator, Bldg. 911A

C-A OPERATIONS PROCEDURES MANUAL

ATTACHMENT

18.8.1.3.a ERL Klystron System (912) Sweep Checklist

C-A-OPM Procedures in which this Attachment is used.		
18.8.1.3		

Hand Processed Changes

HPC No.	Date	Page Nos.	Initials
_____	_____	_____	_____
_____	_____	_____	_____
_____	_____	_____	_____

Approved: _____***Signature with/Date on File***_____
Collider-Accelerator Department Chairman Date

A. Zaltsman

ERL Klystron System (912) Sweep Checklist

(Team leader)_____ (Operator2) _____

Time:_____

Date:_____

Prerequisites

- Two persons to perform the sweep,
- ERL Klystron System Sweep Checklist for C-A-OPM-ATT 18.8.1.3 (one sheet);
- Only people with Electrical Work Training allowed to perform sweep;
- Only A. Zaltsman, R. Lambiase, N. Laloudakis, D. Phillips, John Butler, and Suresh Deonarine can be Sweep Leader;

Check

_____1. Sweep Leader initiates the sweep from the klystron enclosure;

_____2. Sweep team verifies no people are in the klystron enclosure;

_____3. Sweep Leader closes the double door, ensuring that stationary part of the double door is secured with hinges (top and bottom) and locks it with the kirk key;

_____4. Sweep leader removes the kirk key;

_____5. Sweep Team walks to the East double door of the klystron PS enclosure;

_____6. Sweep leader checks that stationary half of the east double door and both halves of the north double door are secured with the top and floor hinges and the North door kirk-locked from inside;

_____7. Team Leader starts the sweep of the klystron PS enclosure by positioning himself at the door, facing the room;

_____8. Second person walks around transformers and power columns counter clock wise;

_____9. Sweep Team exits the room and locks it with the kirk lock;

_____10. Notify C-AD Health Physics that klystron is to be operated and have them place radiological postings as follows:

10.1_____ Klystron room door posted HIGH RADIATION AREA with klystron operating.

10.2_____ Double doors to laser equipment room posted CONTROLLED AREA, TLD required.

10.3_____ Radiation barriers (rope) at walkway between ERL Condo and East Wall of B912 at klystron room and klystron electronics rack (2 locations) posted CONTROLLED AREA, TLD required.

_____11. Sweep Leader files completed checklist in Completed Sweep Log binder kept in the ERL control room.

If you are using a printed copy of this procedure, and not the on-screen version, then you MUST make sure the dates at the bottom of the printed copy and the on-screen version match.
The on-screen version of the Collider-Accelerator Department Procedure is the Official Version. Hard copies of all signed, official, C-A Operating Procedures are available by contacting the ESSHQ Procedures Coordinator, Bldg. 911A

C-A OPERATIONS PROCEDURES MANUAL

18.8.1.4 Procedure for Operating the Klystron

Hand Processed Changes

HPC No.	Date	Page Nos.	Initials

Approved: _____***Signature with Date on File***_____
Collider-Accelerator Department Chairman Date

N. Laloudakis

18.8.1.4 Procedure for Operating the Klystron

1. **Purpose**

This procedure provides instructions to operate the ERL klystron transmitter.

1.1 Active Klystron Connections - The following parts of the klystron will be energized during the test: water circuits, interlocks, solenoid magnets, temperature sensors, window blowers, and Vaclon pumps.

2. Responsibilities

2.1 One of the five system experts, N. Laloudakis, S. Deonarine; J. Butler; K. Smith or A. Zaltsman, will be operating this procedure. One of the system experts must perform the Group LOTO of the switchgear.

3. Prerequisites

3.1 Training - The operator shall have the following valid training as minimum
- 3.1.1 TQ-ELECSAF1, Electrical safety I
- 3.1.2 HP-OSH-151B-W, Lock Out/Tag Out- Authorized
- 3.1.3 Class 2 PPE

4. Precautions

4.1 The Klystron transmitter and power supply is a high voltage, high power system.

4.2 Before Turning ON:

- 4.2.1 Ensure that Cooling tower and Chiller is ON
- 4.2.2 Check that Blank-Off plate (in case of operating without the SC Gun) on output of circulator is installed, or the RF gun is connected
- 4.2.3 Verify that all circuit breakers on cabinet Unit 2-A1 that are not LOTO are turned ON
- 4.2.4 Verify that Circuit Breaker 10-12, panel RP1-A is ON (located next to Power Supply room door)
- 4.2.5 Check that Line Voltage (4160V) is present using meter selector on Switch Gear

5. Procedure

5.1 Turning on Filaments: (Refer to Panel View Monitor located in cabinet Unit 2-A1)

- 5.1.1 Press F4 (Klystron Range) to view Filament Voltage and Current [line 1]

5.1.2 Press F20 (Aux On) to turn on Filaments

a) 30 minute delay will allow for filaments to warm up
   - Verify that voltage ramp up to >12 Volts
   - Verify that Current ramp up to >17 Amps

b) 20 minute countdown will allow for filament Voltage and current to stabilize
   - Verify that voltage is >13.5 Volts
   - Verify that Current is >17.5 Amps

5.2 Perform Sweep: Refer to procedure C-A-OPM-ATT 18.8.1.3.a

5.3 Energizing 4160V: (Class 2 PPE required)

5.7.1 Turn on 208 VAC circuit breaker on cabinet Unit 2–A1 (AC Power Distribution)

5.7.2 Remove Kirk-key 60404 from Power Supply door and insert into 4160V Switch Gear Kirk-lock

a) Turn key and open Grounding-Switch

b) Close Connecting-Switch to energize
   - Buzzer will sound for 30 seconds

5.7.3 Close 4160V circuit breaker using remote switch located on Power Supply room

5.4 Getting the system to Standby:

5.4.1 Press F11 (HVPS Status)

5.4.2 Press F19 (STBY)

a) Magnet Power Supplies and Blowers will turn on

5.4.3 Press F15 (Reset)

a) System should come up to TX Ready
   - Observe that F17 (HV ON) and F18 (TX Ready) is yellow

5.5 Set Initial Voltage to 10kV:

5.5.1 Press Select on Panel View

5.5.2 Type in 10kV and press enter

5.5.3 Press cancel when finished to clear screen

5.6 Turning ON High Voltage:

5.6.1 Press F17 (HV ON) to turn on the 100kV Power Supply

a) Observe that Voltage comes up to approximately 10kV on panel view

5.6.2 Step up Voltage in 10kV steps to 50kV

a) Observe that Voltage comes up to approximately 50kV on panel view
b) Stay at 50kV for approx. 10 minutes to allow water temperature to stabilize

5.7 Turning ON RF:

5.7.1 Turn ON

a) RF Switch (Ensure that RF switch is ON!)
b) RF amplifier
c) Temperature Compensation Unit (Circulator)
d) Setup RF Generator to 703.75 MHz and -50dBm
e) Verify that power meters are connected and offsets are
f) correct
g) Reset Arc Detectors if necessary

5.7.2 Ramp up the Power Supply to 70 kV

a) Enable RF Drive on generator by pushing <u>RF ON</u>
b) Increase RF Drive until output power is approximately 200kW on power meter

5.7.3 Select F5 (Cooling Range) on Panel View and check that the load power and power meter measurements are close

a) This may require a few minutes to allow water temperature to stabilize

5.7.4 Increase the Power Supply Voltage from 70kV to 90kV and verify RF output power

a) Check that power meter and panel view measurements are in sync
b) Increase RF Drive to increase RF output power as required

5.8 Turning RF OFF:

5.8.1 Decrease RF Drive Power on generator in steps
5.8.2 Ramp down the Power Supply to 70kV
5.8.3 Turn OFF RF Drive by pushing the <u>RF ON</u> button on generator
5.8.4 Ramp down Power Supply in 10kV steps

5.9 Turning OFF Power Supply:

5.8.1 Press F17 (HV ON) [power supply should turn OFF]

a) Verify that voltage on panel view goes to 0
b) Press F19 (STBY)
c) After 10 seconds grounding tabs will drop
d) Blowers and Magnet power supplies will remain on for an additional 5 minutes
e) Trip 4160V Circuit Breaker (located on Power Supply room
f) Open Connecting-Switch on Switch Gear
g) Close Ground-Switch on Switch Gear and apply LOTO if required

6. Documentation

None

7. References

None

8. Attachments

None

If you are using a printed copy of this procedure, and not the on-screen version, then you MUST make sure the dates at the bottom of the printed copy and the on-screen version match.
The on-screen version of the Collider-Accelerator Department Procedure is the Official Version.
Hard copies of all signed, official, C-A Operating Procedures are available by contacting the ESSHQ Procedures Coordinator, Bldg. 911A

C-A OPERATIONS PROCEDURES MANUAL

18.8.2.1 ERL Cold Emission Test Vacuum System Operation

Text Pages 2 through 7

Hand Processed Changes

HPC No.	Date	Page Nos.	Initials

Approved: _____***Signature on File***_____ _____
Collider-Accelerator Department Chairman Date

D. Weiss

18.8.2.1 ERL Cold Emission Test Vacuum System Operation

1. Purpose

This procedure covers the basic operation of the ERL Vacuum System for the Cold Emission Test.

The vacuum systems for the Cold Emission Test (CET) consist of the cryomodule beamline vacuum and insulating vacuum for the liquid helium cooled cryomodule.

2. Responsibility:

Supervisor: A shift supervisor, or an operator designated by the Shift Supervisor, is responsible for implementing the procedure.

3. Prerequisites

Operators shall become familiar with the system SCHEMATIC E010605054, the control system screen(s) on the operator station, and the physical location of components and low-level controls.

Operators should already be familiar with the operation of the associated low-level vacuum gauge and pump controllers used on the CET Vacuum systems.

4. System Description

4.1 Beamline Vacuum

The beamline vacuum extends from electropneumatic gate valve VB1 to electropneumatic gate valve VB2. The entire assembly from GVB1 to GVB2 constitutes the string assembly. The beamline vacuum volume contains the vacuum envelope of the 2°K 5-cell cavity, the Fundamental Power Coupler, the thermal transitions to room temperature the high order mode ferrite absorbers and beamline diameter transitions. In addition to the cryopumping, two 20 liter/sec ion pumps IPB1 and IPB2 on either end of the string assembly provide pumping of the warm ends of this volume and also of the 5-cell RF cavity when warm. Current readings indicating vacuum level within the beamline volume are always available. A thermal conductivity TCB1 and cold cathode ionization gauge CCB1 on the upstream end of the string assembly also monitor the beamline vacuum continuously. The Fundamental Power Coupler vacuum is monitored by two independent cold cathode ionization gauges CCF1 and CCF2.

The CET beamline vacuum envelope is bounded by gate valves GVB1 and GVB2 when in the closed position. The boundary of the beamline vacuum will extend to the beamline pick-up probes installed on the gatevalves GVB1 and GVB2 when the gatevalves are in the open position. This extended volume includes the valve body vacuum volume, the volume of the vacuum gauges CCP1,2 and TCP1,2 to monitor the extended volumes and the volume of the associated manifolds. In order for the pick-up probes to acquire signals

during the CET, gate valves GVB1 and GVB2 must be open. Actuation of GVB1 and GVB2 shall be interlocked to vacuum gauge and ion pump readings to protect the 5-cell cavity vacuum.

The logic to interlock and control gate valves GVB1 and GVB2 resides in the vacuum plc located in the 912 ERL mezzanine. Low level vacuum pump and gauge controls also reside in the 912 ERL mezzanine.

4.2 Cryostat Insulating Vacuum

The cryomodule insulating vacuum envelope is bounded externally by the vacuum vessel and internally by the liquid helium vessel. Various ports of the external vacuum vessel accommodate feedthrus for various functions and for vacuum pumping and gauging.

A turbomolecular pump station provides the vacuum pumping to rough and maintain insulating vacuum in the cryostat. A thermal conductivity and cold cathode ionization gauge TCC1 and CCC1 to monitor cryostat vacuum are located on another cryostat port monitor the cryostat vacuum. A right angle electropneumatic valve AVC1 isolates the turbomolecular pump system from the cryostat. Actuation of AVC1 shall be interlocked to vacuum gauge readings on the pump station and cryostat port to protect both the turbopump station and cryostat vacuum.

The logic to interlock and control valves AVC1 resides in a vacuum plc located in the 912 ERL mezzanine. Low level pump and gauge controls also reside in the 912 ERL mezzanine.

5. Vacuum System Components

5.1 Beamline Vacuum

Ion Pumps- The ion pumps are diode type Gamma 20S and are operated at 7kV. The ion pump controllers are Varian Dual Controllers 929-7011.

Vacuum Gauges- The vacuum gauges are HPS pirani enhanced thermal conductivity and cold cathode ionization gauges. The gauge controller is an MKS 937, equipped for RS-232 serial communication, relay set point contacts and 0-10V analog outputs.

Valves- The beamline gate valves are VAT 24VDC solenoid controlled electropneumatic actuated type valves, requiring 60-90 psig pressure to operate. Actuation of the valves shall be accomplished strictly through the vacuum PLC to protect the 5-cell cryomodule from potential damage. Various VAT manual all-metal right angle valves are installed on the warm ends of the string assembly. These valves shall not be operated during the CET test phase.

5.2 Cryostat Vacuum

Vacuum Pumps- The cryostat is pumped by a 300 Liter/second Varian Navigator turbomolecular pump which is backed by a Varian 10 cfm dual stage oil sealed rotary vane mechanical pump. The pumps are operated remotely by a Varian Turbo V-301 pump controller.

Vacuum Gauges- The vacuum gauges are HPS pirani enhanced thermal conductivity and cold cathode ionization gauges. The gauge controller is an MKS 937, equipped for RS-232 serial communication, relay set point contacts and 0-10V analog outputs.

Valves- The cryostat and cryostat pumping system are isolated from each other by a VAT 24VDC solenoid controlled electropneumatic actuated right angle valve, requiring 60-90 psig pressure to operate. Actuation of this valve shall be accomplished strictly through the vacuum PLC to protect the 5-cell cryomodule from potential damage. Analog vacuum gauge readings and turbopump speed are continuously monitored by the vacuum PLC to interlock and protect the cryostat and pump station.

6. <u>Vacuum System Operation</u>

6.1 Beamline Vacuum

Ion pumps IPB1 and IPB2 shall be on at 7kV and in Protect mode with a current limit of 20 mA at all times during the CET phase. If an ion pump trips off, vacuum gauge readings shall be checked to verify that the beamline vacuum level is suitable for ion pump operation.

When the cryomodule is warm, the beamline vacuum (CCB1,2 and CCF1,2) should be better than $1x10^{-8}$ torr with the ion pumps on. If the cryomodule is warm and the ion pumps have been off for an extended time the vacuum may rise to ~$1x10^{-5}$ torr. If gauge readings (CCB1,2 and CCF1,2) are $\leq 1x10^{-5}$ torr the ion pump can be restarted via the pump controller front panel in Start mode and switched to Protect mode, once the current drops below the Protect mode limit. If the pressure is $\geq 1x10^{-5}$ torr contact the lead physicist and vacuum engineer for further instructions.

All gauges shall remain on throughout the CET. If a gauge trips off it should be restarted via the gauge controller front panel.

Gate valves GVB1 and GVB2 should be actuated to open prior to cool down of the cryomodule. If the pressure of the valve and pick-up probe volume is $>1x10^{-6}$ torr, the valve and pick-up probe volume will need to be pumped down by the external portable turbo pump cart prior to opening the gate valve. Once open, the gate valve should remain open to allow the valve and pick-up probe volume to be pumped.

Gate valves may be open or closed during the CET phase depending on the specific tests being conducted. The request to position the valves shall come from the lead physicist. Actuation of the gate valves shall be accomplished through the Vacuum PLC interface. Consideration to minimize the valve closed duration is important to insure the pressure of the valve and pick-up probe vacuum volume does not rise to $>1x10^{-6}$ torr, which would

necessitate additional pumpdown steps described above, and in the initial installation section to follow herein.

Although the valve actuation is interlocked by the vacuum plc with analog gauge readings and ion pump currents, the vacuum gauge readings and ion pump currents should be checked at the controller front panel display before proceeding to command a valve to open. The gauge readings should all match within 1 decade of pressure and all readings should be in the UHV range ($\leq 1x10^{-6}$ torr). If there is a discrepancy in gauge readings, and ion pump currents, the vacuum equipment should be diagnosed for problems. A leak should be suspected if all equipment checks out.

If the valve closes and the pick-up probe volume pressure rises to$\geq 1x10^{-5}$ torr, the volume will need to be pumped down from the external portable turbo pump cart and leak checked prior to opening the gate valve.

Gauge setpoints shall interlock the safe actuation of the gate valves. The gauge setpoints shall be established by the vacuum engineer in coordination with the lead physicist prior to commencing CET. These values shall be posted and shall not be altered unless agreed upon by the lead scientist and vacuum engineer.

If a gate valve closes without a close command the cause should be investigated prior to re-opening the valve. The investigation shall begin with a check of the vacuum readings to insure a leak hasn't caused the closure.

Setpoint outputs corresponding to the 5-cell vacuum cold cathode gauge and the FPC cold cathode gauges shall be used as part of the interlock logic to permit RF power to the cavity. The setpoints shall be established by the lead scientist and RF engineer. These values shall be posted and shall not be altered unless agreed upon by the lead scientist, RF engineer and vacuum engineer.

Setpoint outputs corresponding to the 5-cell vacuum cold cathode gauge shall be used as part of the interlock logic to permit cryogenic cooldown of the cavity. The setpoints shall be established by the lead scientist, cryogenic engineer and vacuum engineer. These values shall be posted and shall not be altered unless agreed upon by the lead scientist, cryogenic engineer and vacuum engineer.

6.2 Cryostat Vacuum

The turbomolecular pump station shall be on and valved into the cryostat during the normal CET phase. Prior to cooldown of the LN_2 Shield ,the pumpstation shall be used to establish the insulating vacuum required to insulate the cryomodule. Roughing the cryostat from atmospheric pressure to ~50 torr will require the isolation valve to be open prior to the turbopump reaching normal operating speed. Additionally a comparison of cryostat and pump analog gauge readings prevents the isolation valve from opening if the gradient would result in a

negative flow (backstreaming) or in a high pressure in-rush that could damage the turbopump. These criteria bracket the window for actuating the isolation valve to the open position. The operator shall actuate the isolation valve open with the pump inlet pressure equal to the cryostat pressure.

Analog gauge readings into the vacuum PLC shall interlock the safe actuation of the cryostat isolation valve.

Setpoint outputs corresponding to the cryostat vacuum gauges shall be used as part of the interlock logic to permit cryogenic cooldown of the cavity. The setpoint shall be established by the cryogenic engineer and vacuum engineer. This value shall be posted and shall not be altered unless agreed upon by the lead scientist, cryogenic engineer and vacuum engineer.

7. ESH

All personnel working on any electrical system or equipment in the C-AD shall be familiar with BNL SBMS Electrical Safety, BNL SBMS Lockout/Tagout (LO/TO), C-A-OPM 1.5, "Electrical Safety Implementation Plan", C-A-OPM 1.5.3 "Procedure to Open or Close Breakers and Switches and Connecting/Disconnecting Plugs", C-A-OPM 2.36, "Lockout/Tagout for Control of Hazardous Energy". C-AD will provide on-site/work specific training to individuals in the electrical safety aspects of their job functions and assignments.

8. System Preparation

8.1 Cryomodule Installation

The ion pumps shall be turned off and the valve volume and cryomodule vacuum gauge readings shall be logged just prior to transporting the string assembly to the Building 912 experimental area.

The valve and cryomodule vacuum gauges and ion pumps shall be started as soon as possible after the string assembly is in position in the 912 block house. Gauge readings shall be monitored and logged. The logged data shall be compared to previously logged data to determine if leaks have developed during shipping and handling.

If a leak is suspected in a valve volume the dry turbo station and leak detector shall be connected to the temporary vent valve using the portable clean room tent and clean room installation practices. A leak check shall be performed.

If a leak is suspected in the cryomodule the dry turbo station and leak detector shall be connected to either temporary vent valve using the portable clean room tent and clean room installation practices. The ion pumps shall be turned off and the turbo valved into the valve volume when the turbo pressure is less than the valve volume pressure. The gate valve shall be opened when the turbo pressure is less than the cryomodule pressure. A leak check shall be performed.

The course of action to investigate suspected leaks or repair any leaks found in the cryomodule beamline or beam valve volumes will require a special procedure with the concurrence from vacuum engineering, mechanical engineering and accelerator physics.

8.2 Instrument Air

Verify that instrument air is available to the air supply line to the air actuated control valves.

8.3 Cryogenic Cooldown

Prior to cooldown of the 80K LN2 cooled shield the insulating vacuum space and the beam tube volume has to be pumped down to $<1x10^{-3}$ torr.

Beamline Vacuum: To minimize residual gas species in the cryomodule beamline from condensing on the cold cavity walls, the beam tube vacuum level shall be $<5x10^{-8}$ torr prior to cooldown.

Cryostat Vacuum: To allow degassing of the MLI, pumpdown shall begin 48 hours prior to cooldown of the LN2 shield.

9. Documentation

9.1 Varian Ion Pump Controller Manual
9.2 Gamma Ion Pump Manual
9.3 MKS Gauge Controller Manual
9.4 Varian Turbopump & Controller Manual

10. References

10.1 C-A-OPM 1.5, "Electrical Safety Implementation Plan".
10.2 C-A-OPM 1.5.3 "Procedure to Open or Close Breakers and Switches and Connecting/Disconnecting Plugs".
10.3 C-A-OPM 2.36, "Lockout/Tagout for Control of Hazardous Energy".
10.4 SBMS Electrical Safety.
10.5 SBMS Lockout/Tagout (LOTO).
10.6 E010605054: e-CX Cold Emission Test Vacuum System Schematic

11. Attachments

11.1 CET e-CX Vacuum Schematic, DWG: E010605054

Attachment 11.1 – CET e-CX Vacuum Schematic

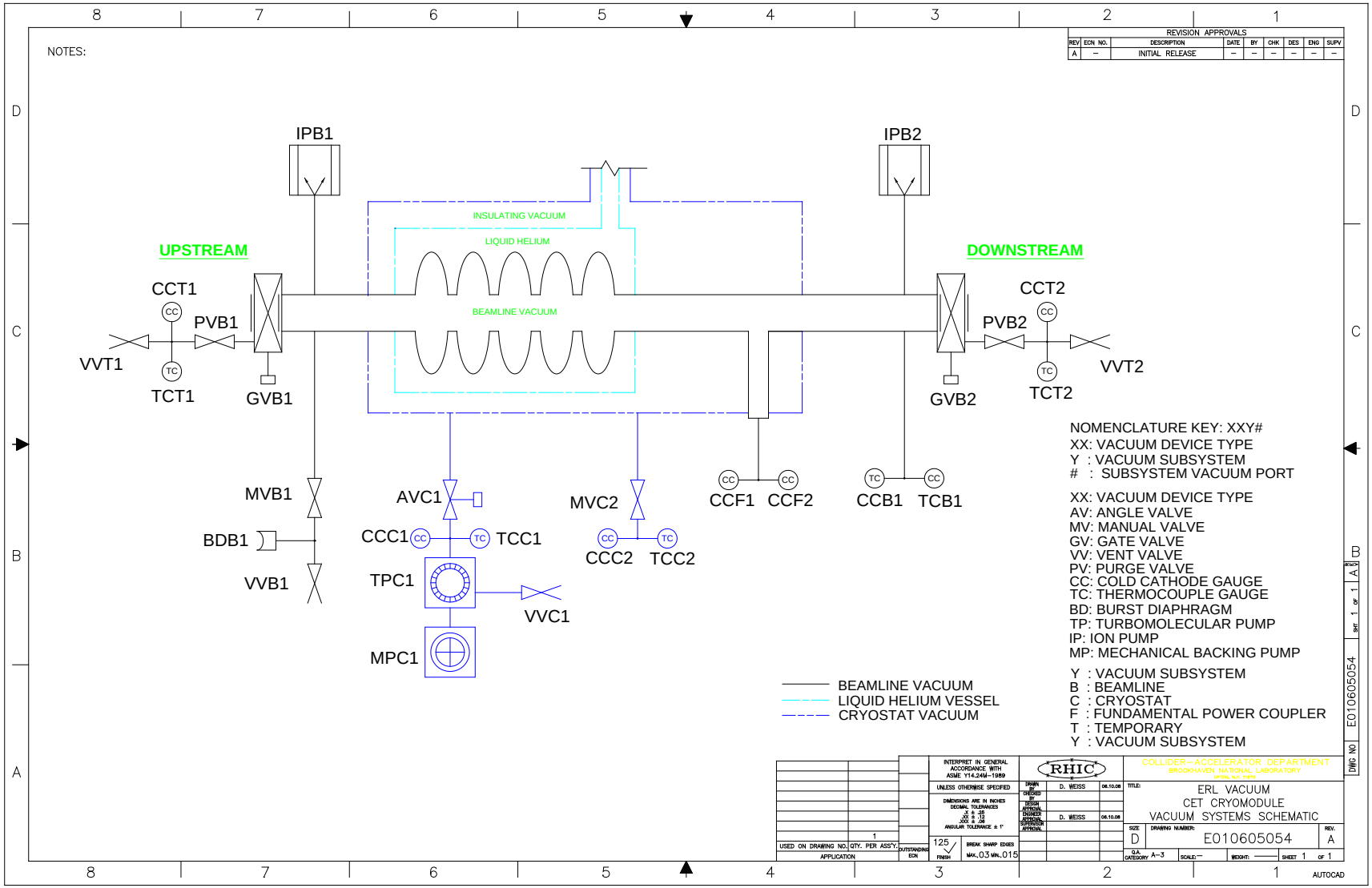

If you are using a printed copy of this procedure, and not the on-screen version, then you MUST make sure the dates at the bottom of the printed copy and the on-screen version match.
The on-screen version of the Collider-Accelerator Department Procedure is the Official Version.
Hard copies of all signed, official, C-A Operating Procedures are available by contacting the ESSHQ Procedures Coordinator, Bldg. 911A

C-A OPERATIONS PROCEDURES MANUAL

18.8.2.2 GHz SRF Polarized Gun Lifting Procedure

Text Pages 2 through 3

Attachments

Hand Processed Changes

HPC No.	Date	Page Nos.	Initials

Approved: ***Signature on File***
Collider-Accelerator Department Chairman

Date

R. Todd

18.8.2.2 GHz Polarized Gun Lifting Procedure

1. Purpose

This procedure details the requirements necessary for safely lifting the polarized gun experiment from the storage cradle to the test dewar.

2. Responsibilities

CAD personnel who undertake lifting of the experiment are responsible for following this procedure.

3. Prerequisites

3.1 Personnel who operate the overhead crane shall have Overhead Crane Operator training and site specific crane training.

3.2 All authorized personnel performing and involved with this procedure shall wear the following personnel protective equipment (PPE):

3.2.1 Hard hat
3.2.2 Safety shoes
3.3.3 Safety glasses

3.3 Calibrated torque wrench.

3.4 While work is underway and an abnormal condition arises, re-review the job against criteria in applicable SBMS Subject Areas, and/or work planning requirements. If unsure of further actions, discuss situation with supervisor.

4. Precautions

Caution:
Use caution when working with overhead loads.

4.1 Secure area around lift to prevent personnel from entering.

5. Procedure

5.1 **Pre Lift Inspection**

5.1.1 Verify the lifting provisions are those called out in Figure 1. (BNL Drawing 010616175 “LIFTING DIAGRAM, POLARIZED GUN”).

5.1.2 Prior to lifting the experiment, check all rigging for current inspection and check for damage.

5.1.3 Prior to lifting, check for loose or damaged fasteners and confirm the lifting rings are fully threaded into fixture.

5.1.4 Verify the preload of the 5/16 bolts (item 8) holding the lifting fixture to the top plate is 145 in-lbs. (BNL Drawing 010616170 Rev. A, LIFTING FIXTURE INSTALLATION).

5.1.5 Be sure all loose hardware, tools etc are removed from the top plate and be sure all components on bread board are secure prior to lifting.

5.2 **Lifting**

5.2.1 Lock the casters of the support stand and remove the bolts securing the lifting fixture to the support stand.

5.2.2 Slowly lift experiment from the cradle. As center of gravity may not be directly under lift line, be sure lifting slings do not contact and damage parts of the experiment during initial lifting. If adjustment to the load tilter is necessary, lower the experiment back to the cradle and adjust load tilter as necessary to find and maintain the center of gravity during the lift.

5.2.3 Lower the experiment into the dewar. Install eight top plate bolts to dewar. Torque to 200 in-lbs.

6. Documentation

BNL Drawing(s):

010616170 Rev. A, LIFTING FIXTURE INSTALLATION

010616175 Rev. A, LIFTING DIAGRAM, POLARIZED GUN

010616167 Rev. A, LIFTING FIXTURE, RH, ASSY

010616168 Rev. A, LIFTING FIXTURE, LH, ASSY

7. References

None

8. Attachments

8.1 Figure 1 – Lifting Diagram
8.2 Figure 2 – Lifting Fixture Installation

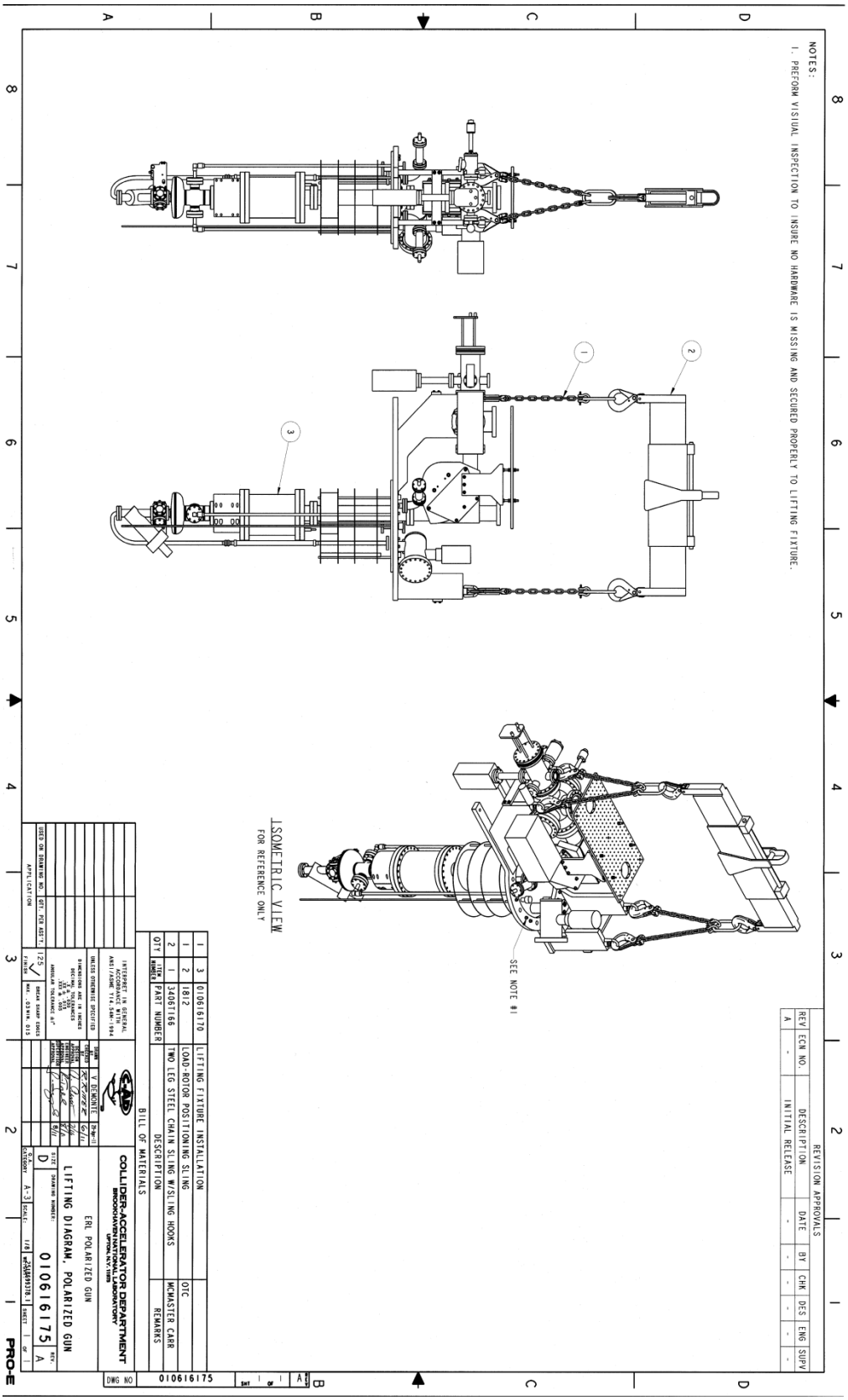

Figure 1. Lifting Diagram

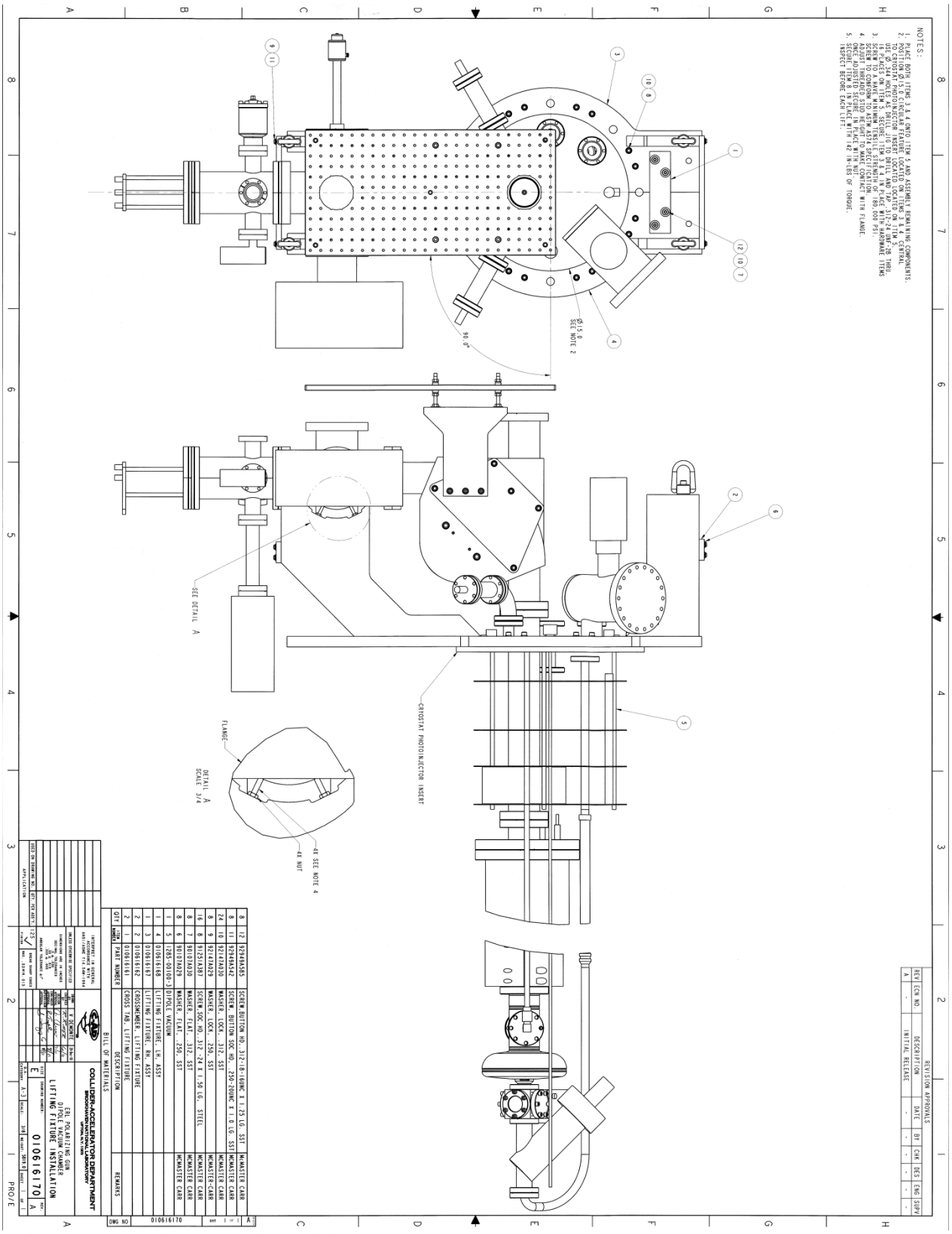

Figure 2. Lifting Fixture Installation

If you are using a printed copy of this procedure, and not the on-screen version, then you MUST make sure the dates at the bottom of the printed copy and the on-screen version match.
The on-screen version of the Collider-Accelerator Department Procedure is the Official Version.
Hard copies of all signed, official, C-A Operating Procedures are available by contacting the ESSHQ Procedures Coordinator, Bldg. 911A

C-A OPERATIONS PROCEDURES MANUAL

18.8.2.3 Procedure for Operating the Vacuum Systems of the ERL SRF e-gun and Cathode Transport Cart

Attachments

Text Pages 2 through 9

Hand Processed Changes

HPC No.	Date	Page Nos.	Initials

Approved: ***Signature on File***
Collider-Accelerator Department Chairman

Date

D. Weiss

18.8.2.3 Procedure for Operating the Vacuum Systems of the ERL SRF e-gun and Cathode Transport Cart

1. Purpose

This procedure covers the operating steps required to establish, maintain and protect the vacuum systems of the ERL SRF e-gun in the ERL accelerator facility. Two distinct vacuum systems, namely insulating and beamline are involved in the e-gun operation.

Note:
This procedure covers only the tasks related to integrating the cathode cart to the SRF e-gun and preparing the beam line vacuum for beam and control and monitoring of the vacuum systems during e-gun operation.

2. Responsibilities

1) The Liaison Vacuum Representative shall confirm with the ERL Liaison Physicist, or the SRF Group Leader, or designee, that repositioning of the cathode transport cart is imminent.
2) The Liaison Vacuum Representative or designee shall perform the steps detailed in this procedure.
3) The Liaison Vacuum Representative or designee shall be familiar with the vacuum system as defined by BNL drawing 010605174 e-gun Vacuum System Schematic, Attachment 8.1.

Note 1:
The schematic indicates which vacuum system components are controlled from the Building 912 mezzanine and which are controlled locally at the cathode cart. Devices controlled and monitored locally can also be monitored remotely.

Note 2:
Opening of all the solenoid operated gate valves is restricted by vacuum conditions adjacent to the valve and other machine states as prescribed herein. However, the conditions that allow any solenoid operated valve to actuate open or closed should be verified by the Liaison Physiscist and Vacuum Representative prior to issuing the command. Closing of the gate valves GVT1 and GVB1 is strictly prohibited if the cathode limit switches indicate the stalk is not fully retracted. Controls and interlock logic for GVT1 and GVB1 reside in the cathode cart controls rack. Control and interlock logic for the e-gun exit valve GVB2 resides in the vacuum PLC in the mezzanine. Actuation is initiated from PLC or the PC interfaced to the PLC or remotely via PET page operation.

3. Prerequisites

3.1 Coordination between personnel responsible for the transport cart and deposition system and personnel responsible for ERL e-gun preparation and operation is needed to preserve the UHV particle-free beam line environment.

3.2 Before the transport cart is disconnected from the deposition system or e-gun, the ERL Liaison Physicist or the SRF Group Leader must confirm that:

1) ERL e-gun is ready to accept the transport cart.
2) The cathode is prepared, the cold finger volume is vacuum baked and the cold finger isolation gate valve is open.
3) Suitable notice, on the order of a few days or more, is provided to vacuum personnel to accomplish steps 4 thru 6 below.
4) A portable clean room is installed and operating over both the e-gun and deposition system load locks to establish and preserve particulate-free environment during disconnection and connection of the transport cart from the deposition system and e-gun respectively.
5) All surfaces within the portable clean room are wiped down and processed to ISO 14644 class 5 clean room standard or have been sealed with clean room plastic to preserve the portable clean room environment.
6) Verify with calibrated particulate counter that the space is particulate free.

4. Precautions

To protect against cathode poisoning, ensure that the power to the ion pumps is uninterrupted if the movement of the cathode cart is stopped for an abnormal condition.

Note:
Ion pumps shall remain energized with normal facility power as long as possible. Switchover to portable/UPS power shall be just before executing the cathode cart lift. Normal facility power shall be restored immediately following placement of the cathode cart in the frame.

This procedure assumes the elapsed time for the actual transport of the cart between the deposition system and e-gun will take on the order of ½ hour to complete. That is the time from lift-off of one frame and placement on the other frame.

5. Procedure

5.1 Preliminary Remarks

1) A complete set of controls for operating the cathode cart vacuum system including pumps, gauges and valves is permanently installed in the fixed frame at both the deposition system and ERL e-gun.

Note:
Refer to C-A-OPM 18.11.2, "Procedure for Transporting a Grown Bi-alkali (K_2CsSb) Cathode and its Assembly into the ERL SRF gun", for precise detailed steps, notes and cautions addressing the rigging and manipulation of mechanical and cryogenic features of the cathode cart.

2) Verify that load lock valves are closed and disconnected.

Note:
Load lock gate valve air and electrical connectors shall remain disconnected until instructed to connect.

3) Verify that vacuum in the transport cart and the e-gun is in the UHV regime and if possible verify that low partial pressures of H_2O, CO and CO_2 are achieved.

Note:
The portable clean room shall remain operating over the deposition load lock until after completion of the following step.

4) Install protective covers over the exposed load lock gate valve aperture flanges after disconnecting the transport cart from the deposition system.

5.2 Preparing to operate the e-gun. Detailed vacuum steps

Note:
The following steps are to be accomplished once the cathode cart transport rigging is installed per C-A-OPM 18.11.2.

1) At the deposition system, de-energize all gauge controllers and disconnect all 7 gauge cables from the cathode cart vacuum system at the intermediate connection point. Gauges to disconnect are: CCL1, CCT1, CCT2, CCT3, TCL1, TCT1 and TCT3.
2) Disconnect ion pump IPL1 cable from the cathode cart vacuum system at the intermediate connection point.
3) De-energize ion pump IPT1 and transfer to portable/UPS power. Repeat for ion pump IPT2.

Note
If approved, the two ion pumps may be de-energized, disconnected and remain de-energized during the actual transport. In this case skip step 4.

4) Monitor ion pump voltage and current during transport.
5) Upon placement of the cathode cart on the fixed frame following transport, de-energize and disconnect ion pump IPT1 from portable/UPS and connect to

the cathode cart control in the blockhouse. Repeat for ion pumps IPT2.

6) Connect ion pump IPL1 to the cathode cart controls.
7) Connect cables for all 7 gauges, energize gauge controllers and gauges to the cathode cart control
8) Wipe down or cover surfaces of cathode cart that will penetrate into the portable clean room.

Note:
Verify that all tools and parts necessary to connect, seal and pump down the load lock volume are staged inside the portable tent before proceeding to the next step.

9) Verify that clean room environment particle count is acceptable to continue work.
10) Connect and begin flow of UHP filtered N2 purge of load lock at MVL1.
11) Remove protective covers from both the cathode cart and e-gun load lock gate valve aperture flanges GVT1 and GVB1 respectively.
12) Blow down the load lock area and verify that parts are particulate free.
13) Once the load lock area is particulate free, move valves GVT1 and GVB1 together per complementary OPM.
14) Install load lock gate valve seal and chain clamp.
15) Connect turbo cart snake to load lock roughing valve MVL2.
16) Stop flow of UHP filtered N2 purge of load lock.
17) Start load lock thermocouple vacuum gauge TCL1.
18) Begin slow pump down of load lock.
19) Complete pump down of load lock, start load lock cold cathode gauge CCL1 and perform vacuum leak test.

Note:
Provided leak test is successful, proceed to step 20. Otherwise valve out turbo pump cart, de-energize load lock vacuum gauges, bleed-up load lock with UHP filtered N2, remove chain clamp and seal, separate GVT1 and GVB1. Repeat procedure from step 13.

20) Maintain vacuum pumping of load lock.
21) Wrap load lock flange and chain clamp with aluminum foil to protect interface from collecting dust.
22) Wrap snake connection to the load lock roughing valve with clean room tape to protect interface from collecting dust.
23) Prepare load lock bake out.
24) Install thermocouple on foil wrapped chain clamp
25) Install heater jacket over foil on chain clamp.
26) Power and control test all load lock bake out zones.
27) Connect load lock gate valve cables and compressed air lines.

Note:
Notify group responsible for connecting and flowing LN2 through cold finger and inserting cold finger into cathode cart. Step 28 can be performed once the cold finger is verified to be cold and inserted into position between the cathode cart gate valve and cathode stalk.

28) Conduct bake out of the load lock. Ramp all zones at 50ºC per hour to 200ºC and dwell for 24-48 hours.
29) With all zones at max temperature perform a leak test of the load lock.
30) During bake out periodically energize and de-energize the ion pump IPL1.
31) Once the bake out has ramped down to 50ºC, start the ion pump IPL1.
32) Once the vacuum indicated by gauge CCL1 is less than the base pressure of the turbo cart, close the load lock roughing valve MVL1.
33) Once the bake out is complete, the cathode cart load lock gate valve GVT1 can be actuated open at the Liaison Physicist's discretion.

Note:
There may be a benefit to opening the load lock valve GVT1 prior to removing the cold finger, as actuation of the valve can dislodge surface molecules causing a short duration pressure rise. If this pressure rise can be tolerated by the cathode, the load lock valve can remain closed until preparing to insert the cathode.

34) Proceed to isolating the cold finger from the cathode cart beam line.

Note:
The group responsible for operating the cold finger shall conduct the following step 35 per C-A-OPM 18.11.2.

35) Retract the cold finger, close the cold finger isolation gate valve MVT1, and stop LN2 flow.
36) During warm-up of the cold finger, monitor vacuum. If the pressure inside the cold finger volume indicated by TCT2 rises above atmospheric pressure by 100 mbar, open the cold finger roughing valve MVT2 to release excess pressure.

Note:
While warming up the cold finger, monitor cathode cart vacuum gauges CCT1 and CCT3. Pressure rises of CCT1 and CCT3 indicates a leak across the cold finger isolation valve MVT1 into the cathode beam line that requires turbo pumping of the cold finger volume. The Liaison Physicist must be notified and a decision to continue or abort must be made.

37) Provided valve MVT1 is leak tight, proceed to the following instructions to and complete vacuum related steps to prepare the e-gun for operation.

Note 1:
The load lock turbo pump cart and UHP nitrogen system can remain connected to the load lock, unless they must be removed to remove the portable clean room. Removal of these systems from the load lock must be performed prior to removing the clean room.

Note 2:
The portable clean room must be removed and the vent header connected to the burst diaphragm BDT1 installed on the cathode cart prior to cool down of the e-gun, if the cathode is previously inserted into the e-gun. The load lock turbo pump cart and UHP nitrogen system can remain connected to the load lock, unless they must be removed to remove the portable clean room.

38) If the load lock gate valve GVT1 is not open, it may be opened at this time, at the discretion of the Liaison Physicist.
39) If the load lock gate valve GVB1 is not open, it may be opened at this time, at the discretion of the Liaison Physicist.

Note:
Verify the bake out of the injection line has been completed and injection line vacuum as indicated by vacuum gauge CCI1 is no more than low -10 mbar range prior to opening e-gun isolation valve GVB2. If the injection line is not baked at this point, follow the injection line bake out steps at the end of this OPM prior to conducting the following steps.

40) If the injection line vacuum per CCI1 is not low 10^{-10} mbar or at lowest historical reading, the TSPs should be flashed and time to recover to lowest readings provided before proceeding to the next step.
41) If the e-gun vacuum as indicated by vacuum gauge CCB1 is not low 10^{-10} mbar range and injection gauge CCI1 is, the e-gun exit gate valve GVB2 may be open before the cathode is inserted into the e-gun as an attempt to improve e-gun vacuum at the discretion of the Liaison Physicist.
42) Once GVT1 and GVB1 are open and the vacuum as indicated by vacuum gauge CCB1 is acceptable, the mechanical steps required to insert the cathode may be performed at this point.

Note:
The group responsible for inserting the cathode stalk shall conduct those steps per C-A-OPM 18.11.2.

43) The SRF gun is now ready for operations with the cathode.

5.3 Preparing injection beam line for e-gun operation. Detailed vacuum steps

Note:
The following steps assume the portable clean room is operating over the injection line roughing valve connection.

1) Connect turbo cart snake to injection beam line roughing valve MVI2.
2) Start injection line thermocouple vacuum gauge TCI1.
3) Begin slow pump down of the injection beam line.
4) Complete pump down of the beam line, start cold cathode gauge CCI1 and perform vacuum leak test.

Note:
Provided leak test is successful, proceed to step 5. Otherwise valve out turbo pump cart, de-energize injection line vacuum gauges, slow bleed-up injection line with UHP filtered N2, and repair leak. Repeat procedure from 5.3 step 1.

5) Maintain vacuum pumping of injection beam line.
6) Wrap roughing valve flange connection with aluminum foil to protect interface from collecting dust.
7) Prepare injection line bake out.
8) Conduct bake out of the injection line. Ramp all zones at 50ºC per hour to specified target temperature and dwell for 48 or more hours.
9) With all zones at max temperature perform a leak test of the injection beam line.
10) During bake out periodically energize and de-energize the ion pumps IPI1 thru IPIx from the mezzanine ion pump power supplies or via PET over an Ethernet interface.
11) Degas each TSP filament. First 30 amps for 30 minutes each. Followed by 40 amps for 5 minutes each.

Note:
The TSP controls are located in a vacuum rack residing in the ERL mezzanine.

12) Once the bake out has ramped down to 50ºC, flash one TSP filament at 48 amps for 5 minutes.
13) Once the vacuum indicated by gauge CCI1 is approximately equal to the turbo cart base pressure, start all injection ion pumps (IPI1 thru IPIx).

Note:
Initial ERL e-gun tests are likely to only include IPI1 as shown on the included schematic. Complete injection line will include ion pumps IPI1 through IPI6.

14) Close the turbo cart roughing valve MVI2.
15) The turbo cart shall be removed followed by the portable clean room.
16) The laser tower if removed previously may be reinstalled at this time.
17) Once low 10^{-10} mbar base pressure or better is achieved, the e-gun exit valve GVB2 can be opened at the Liaison Physicist's discretion.

6. Documentation

None

7. References

None

8. Attachments

8.1 Figure 1. ERL e-gun Vacuum System Schematic, BNL C-AD Drawing 010605174.

8.2 System Overview.

Attachment 8.1
ERL e-gun Vacuum System and Instrumentation Schematic, including Cathode Transport and basic minimum injection Vacuum System.

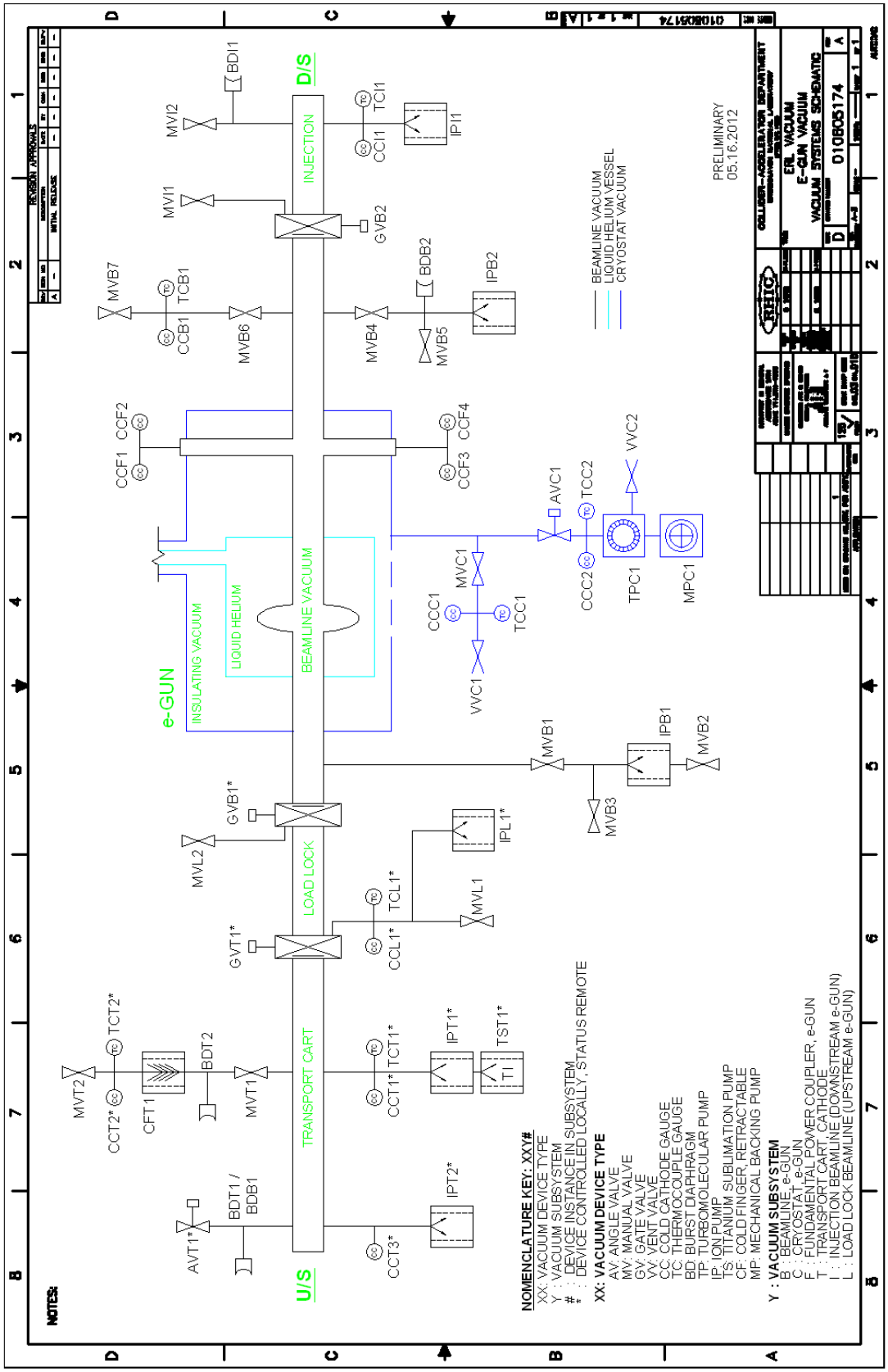

Attachment 8.2 – System Overview

The insulating vacuum system thermally insulates the SRF cryomodule at operating temperature. The insulating vacuum is maintained below $1x10^{-4}$ torr prior to cool down of the SRF with the use of a turbomolecular pumping station. The insulating vacuum is reduced to less than $1x10^{-7}$ torr upon cool down of the cryomodule.

The beam line vacuum system is ultra-high vacuum (UHV) and particle-free. Low 10^{-10} torr with corresponding low partial pressure of H_2O, CO and CO_2 is desired to avoid cathode poisoning. Several vacuum sections of the ERL beam line must be considered in the e-gun vacuum system procedure to properly protect the e-gun SRF cavity and prepared cathode. The vacuum sections include the cathode transport, e-gun cryomodule, load lock between the two sections and the injection beam line immediately downstream of the e-gun exit. These vacuum sections, separated by isolation gate valves, are common to the e-gun when the gate valves are open.

When gate valves are closed, beam line vacuum is maintained in the e-gun by ion pumps and improved with cold mass cryopumping upon cool down. Beam line vacuum of the cathode cart and injection beam line is maintained with ion pumps and titanium sublimation pumps (TSPs). Various vacuum bake outs are performed to achieve UHV goals. Bake outs of the cathode deposition system, cathode transport cart and load lock separating the two are performed in advance of growing a cathode and are covered by a dedicated OPM. Bake outs of the e-gun to cathode cart load lock and injection beam line are performed in advance of cathode introduction to the e-gun. The e-gun cryomodule is unbaked.

If you are using a printed copy of this procedure, and not the on-screen version, then you MUST make sure the dates at the bottom of the printed copy and the on-screen version match. The on-screen version of the Collider-Accelerator Department Procedure is the Official Version. Hard copies of all signed, official, C-A Operating Procedures are available by contacting the ESSHQ Procedures Coordinator, Bldg. 911A

C-A OPERATIONS PROCEDURES MANUAL

18.8.5 ERL Laser System Operations

Hand Processed Changes

HPC No.	Date	Page Nos.	Initials

Approved: _____***Signature With Date on File***_____
Collider-Accelerator Department Chairman Date

B. Sheehy

18.8.5 ERL Laser System Operation

1. Purpose

The purpose of this document is to describe the procedures for operating the laser system that drives the photocathode in the Energy Recovery Linac located in building 912 of the Collider Accelerator Complex.

2. Responsibilities

A Laser Operator (LO) is responsible for implementing the procedure described herein. The Operating Procedures for the ERL require determinations of laser parameters for the safe operation of the ERL. The LO is responsible for certifying these parameters to the Operations Coordinator and Shift Leader. The latter are responsible for verifying that such certification has been received from the LO before proceeding with operations.

3. Prerequisites

The Laser operator must meet all requirements of Worker Qualification outlined in the SBMS chapter on Laser Safety for working with Class IV lasers. These include medical surveillance, all web-based training courses, and job-specific training for the ERL laser system.

4. Precautions

4.1 Verify that laser shutter 3 is closed (no laser to gun). There are 4 shutters controlling laser power to the photocathode: one internal shutter, which is controlled by the laser control software (see below), and three external shutters, numbered 1-3. Shutters 1 and 2 are located directly in front of the laser and are managed by Access Controls to control laser emission even into the laser room. Number 2 is the primary control, and number 1 is the reach-back (in case the downstream shutter should fail). Shutter 3 is located at the entrance to the vacuum line between the laser room and the ERL bay and controls emission into the ERL bay.

4.2 Personal Protective Equipment (PPE): Observe all PPE requirements described in the ERL laser room Standard Operating Procedure.

4.3 Enclosure: Verify that the optical enclosure on the table is secure and labeled appropriately. All panels should be in place, and the cover screwed down. Within this enclosure are a power attenuator and detectors which are used in conjunction with the control system to limit the laser power that can reach the photocathode. Labeling on the cover should clearly state that these elements

are under configuration control, and access during operations within the enclosure is limited to the LO, who must observe the certification procedures described below.

4.4 Warmup: The laser should optimally be warmed up for 3 hours before operations. During run periods, the power supply and cooling system should be left on when the laser is shut off. If this practice has been followed, a warmup of 1 hour may be sufficient, but 3 hours is preferable. Turn on of the laser is described in the Lumera manual.

5. Procedure

Note:
For best performance, the laser should be warmed up for 3 hours before operations. During run periods, the power supply and cooling system should be left on when the laser is shut off. If this practice has been followed, a warmup of 1 hour may be sufficient, but 3 hours is preferable. Turn on of the laser is described in the Lumera manual.

5.1 Setup

5.1.1 Remote Access: The laser may be operated from the control area using remote desktop. Verify that the communication link is functioning.

5.1.2 LLRF Connections: Verify that the following cable connections are made with the low-level radio frequency (LLRF) system (Fig. 3):

5.1.2.1 Reference in from LLRF panel to the DRO input on the RFC100 Repetition Rate module in the Menlo Systems electronics (Fig. 4)

5.1.2.2 Loopback connection: between the labeled loopback ports on the LLRF panel.

5.1.2.3 Phase error: from Laser Timing Chassis to LLRF chassis

Note:
More information on the locking system may be found in the RRE Repetition Rate Stabilization chapter (Ch. 9) in the Lumera Laser manual binder.

5.1.3 Test the phase error reporting by locking the laser to the LLRF reference and observing the phase error reported in the LLRF system. To lock the system:

5.1.3.1 Observe the signal from the Monitor port of the RFC 100 Lockbox module (Fig 4) on an oscilloscope (it may be routed through an amplifier). The signal will be a low-frequency sine wave. The frequency *f* of this wave is the difference between the RF reference frequency and the laser repetition frequency.

5.1.3.2 Using the toggle switch on the SMC1000 module (Fig. 5), adjust the laser mirror position until the frequency *f* of step 5.1.3.1 is reduced to 10 Hz or less. Step size of the mirror may be adjusted with the potentiometer to the right of the toggle switch.

5.1.3.3 Press the Lock/Unlock button on the RFC 100 Lockbox module. The light should go green for (?) a moment, and the monitor trace should go flat.

5.1.3.4 Press the button on the SMA1000 controller (Fig. 4) (NOT the SMC1000). This activates the coarse tracking.

5.1.3.5 To unlock the laser, press the Lock/Unlock button on the RFC 100 module. Light should go red.

5.1.3.6 The phase error measured back at the LLRF system in the control room should be ~ 1 psec rms (~0.25 deg of phase) or better. An independent measure of the jitter may be made by measuring the peak-to-peak amplitude V_{pp} of the oscillation observed in step 5.1.3.1 (use the amplifier if $V_{pp} < 2$ volts). Then, after locking, observe the rms fluctuations Δv_{rms} in the same monitor signal (roll off the amplifier above 30 kHz). The rms jitter is then given by:

$$\Delta t_{rms} = \frac{\Delta v_{rms}}{\pi V_{pp}} \; 1422 \text{ psec}$$

5.1.4 Pulse Counting System: Verify operation of the pulse counting system by running the laser at full rep rate and confirm that pulses are counted and reported to the control system at 9.4 MHz.

5.1.5 Timing Connections: Connect the ‘Laser Gate’ output, which originates from the control area, to the ‘Trigger’ connection (BNC) on the back panel of the Lumera laser power supply. Verify pulsed operation by observing the counting detector signal on the oscilloscope.

5.2 Setting Pulse Energy and Certification Procedure

5.2.1 In accordance with the ASE for ERL operation, the average beam power must be limited. One way that this is controlled is an engineering limit on the average laser power reaching the photocathode. This, in turn, is implemented by setting a limit on the laser duty cycle. The laser duty cycle depends on the laser pulse energy. The process is described in the section **Laser Beam Power Limitation to assure electron beam power limitation** (attachment A). Below, we reference the following variables from the attachment:

- I_0, the maximum electron beam current,
- P_{lmax}, the maximum laser power, measured at the full laser repetition rate of 9.38 MHz,
- ξ, the efficiency of the photocathode, in units of current/power, and
- χ, the laser duty cycle.

The control system will limit the duty cycle of the laser to

$$\chi \leq \frac{I_0}{P_{lmax}\xi}$$

by restricting the repetition rate *f* and length *w* of macrobunch trains ($\chi = fw$).

Operational limits in the current measurement may further constrain the value of *f* used in the in the calculation of χ. I_0 is administratively set; ξ is measured or, if no measurement is available, taken to be its maximum value of 0.043 A/W (corresponding to a QE of 10%).

Warning:

The following procedure must be followed at the beginning of operation and any time a change in the maximum bunch charge is made. If any adjustment in the optics between the external attenuator and the power monitor is made, or there has been unauthorized access to the laser enclosure, steps 5.2.1 and 5.2.6 - 5.2.10 should be repeated by the LO to verify the value of P_{lmax}.

The LO must certify the value of P_{lmax} through the following steps:

5.2.1 Close laser shutter 3.

5.2.2 Determine the electron bunch charge Q required for the ERL operation, in consultation with the Shift Leader and Operations Coordinator.

5.2.3 Using the expected value of the quantum efficiency and a factor to allow for QE decay, estimate errors, etc, determine a laser pulse energy E_{lmax} to reliably produce the charge Q. To achieve a charge Q using a 532 nm laser pulse, one needs a laser pulse energy of at least

$$E_{lmax}\ [\mathrm{J}] = \frac{Q[C] * 2.33}{QE}$$

where QE is between 0 and 1. A larger value should be chosen to allow for the above factors, but the larger the value of E_{lmax} , the more the duty cycle will be restricted.

5.2.4 Calculate P_{lmax} from $P_{lmax} = (9.383\ \mathrm{MHz}) * E_{lmax}$.

5.2.5 Set the laser to run at full repetition rate.

5.2.6 Open the (internal) laser shutter (Fig. 6).

5.2.7 Set the internal laser power control to maximum output (motor setting 100, Fig. 7).

5.2.8 The LO must adjust the external attenuator until the power monitor reading is no greater than P_{lmax}. The LO will lock the external attenuator and certify to the Shift Leader and the Operations Coordinator that the value is set to P_{lmax}. 5.2.9 With the Shift Leader, enter the value of P_{lmax} into the control system and log the change.

5.2.10 Set the laser to run in gated mode, and verify that is not firing by looking at the pulse monitor photodetector signal.

5.2.11 Open shutter 3.

5.2.12 If no beam current is detected, the QE of the photocathode may have deteriorated since the last measurement.

5.2.12.1 Progressively increase E_{lmax} by adjusting the attenuator setting, the aperture size, or the value of the beamsplitter that separates the main beam from AB3 in Fig. 1. The latter will require a beam realignment, but the adjustments will be minimal if the optic is replaced without removing the mount.

5.2.12.2 Repeat steps 5.2.8.5 -5.2.8.10 after each increase.

5.2.12.3 Operate at the lowest repetition rate possible until a new value of the QE has been determined.

5.2.2 One may adjust the energy from 0 to $E_{\underline{lmax}}$ by using the attenuator that is internal to the Lumera laser. On the main software graphical user interface (GUI), click Motor Position, then set from 0-100 on the GUI that pops up. At sufficiently high duty cycles, the energy may be determined from the average power measured by the power monitor, the known duty cycle, and the base 9.4 MHz repetition rate. At lower duty cycles, on may use the calibration curve relating motor position to % output.

5.3 Shutdown

5.3.1 Inform Shift Leader and Operations Coordinator that laser is to be shut down.

5.3.2 Close laser shutter 3.

5.3.3 Close internal laser shutter (main GUI of Lumera program).

5.3.4 Unlock the phase lock (press Lock/Unlock button on RFC 100 module, light should go red).

5.3.5 Press Stop on main GUI of the Lumera program. Information messages will appear detailing shutdown steps. Wait for completion.

5.3.6 Exit the Lumera program.

5.3.7 Turn key on power supply CCW to upright position. Remove and store in assigned location.

5.3.8 If laser is to be used within the next few days, leave the power supply and chiller running. This maintains the doubling crystal temperature and improves lifetime.

5.3.8.1 If shutting down longer term, shut down Windows on the control computer; when the message appears informing you that you may now shut down your computer, hit the green rocker switch below the key switch to power down the laser power supply.

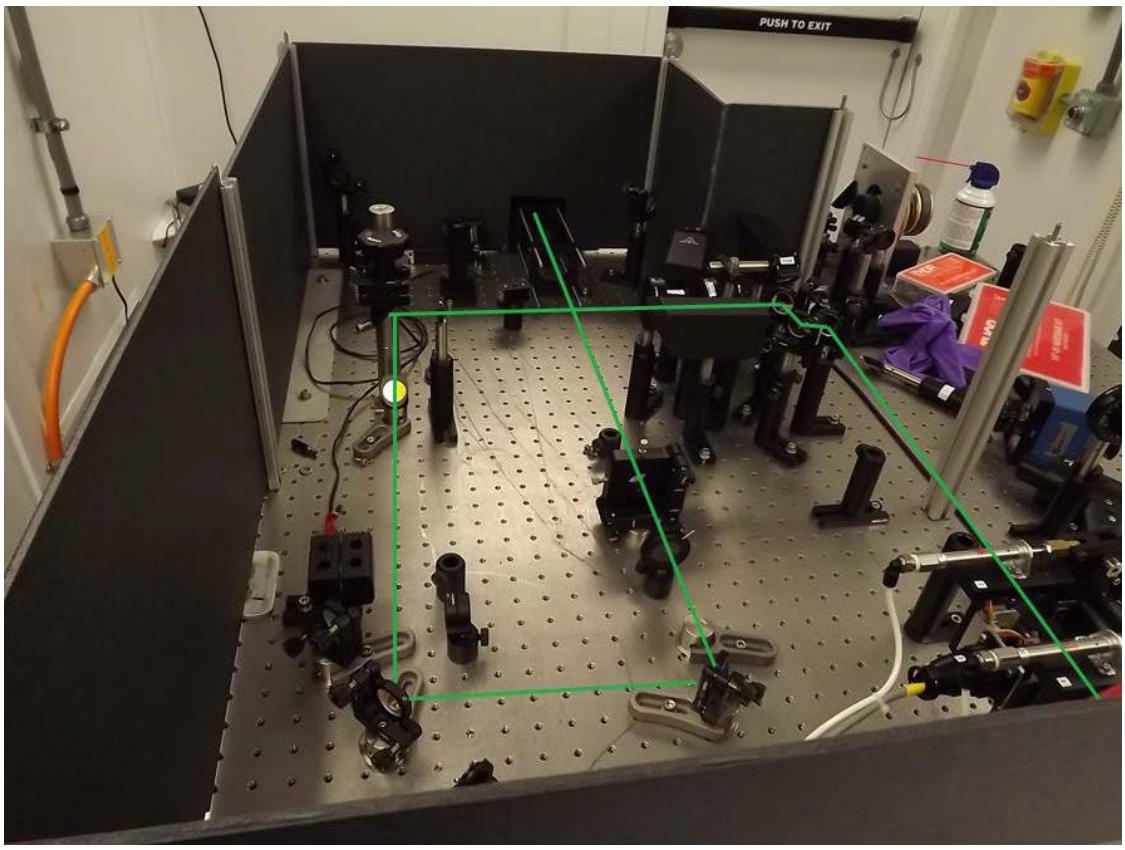

Figure 1. Main beam path on first table. Lumera laser beam exit is located at lower right corner of the photo. The cluster of optics following the shutters is for pulse counting and energy attenuation and are shown in detail in the next figure. Some beam optics have been removed in this figure.

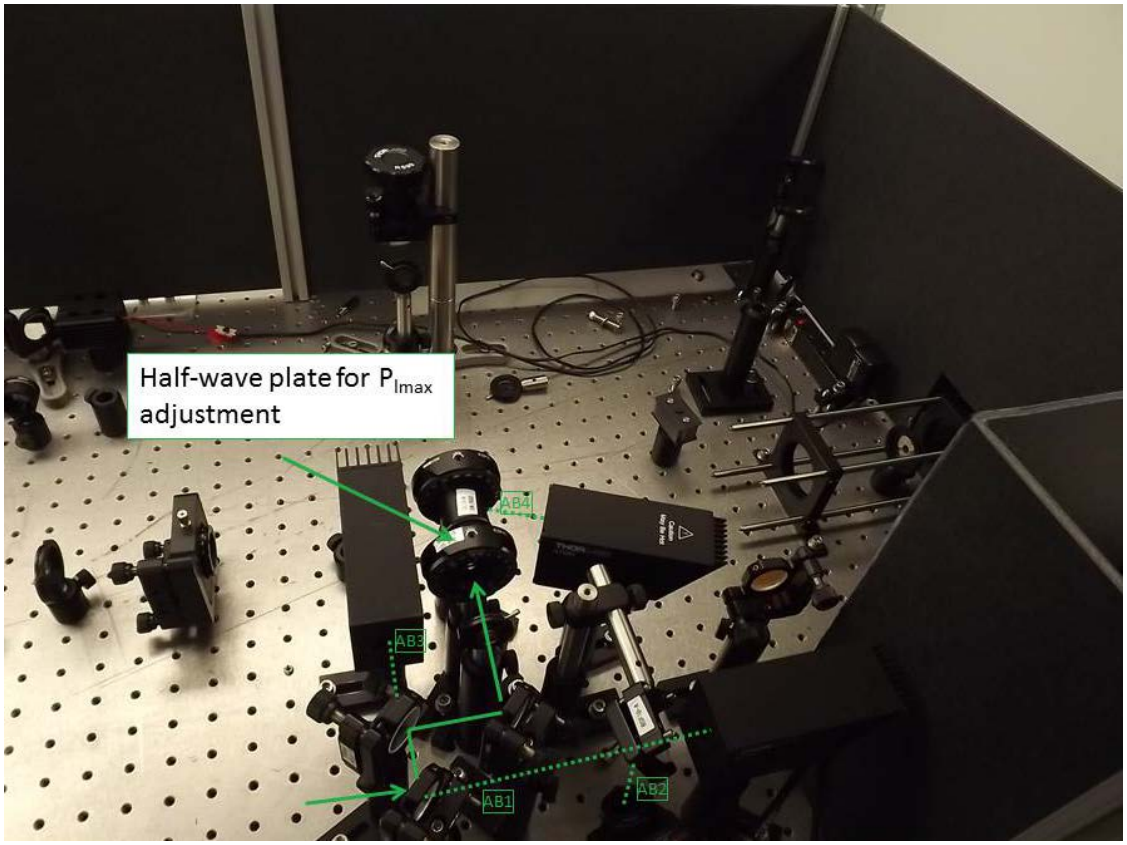

Figure 2. Attenuator and Counter optics. AB=alternative beam. The 1 □m beam is separated in AB1 and dumped. AB2 samples the pulse train and directs it to a photodiode, which is used to count the actual number of pulses delivered to the photocathode. A partially-reflecting beam splitter reflects a fraction of the green beam, dumping the rest in AB3. P_{lmax} is adjusted by rotating the polarization with the half wave plate shown, varying the light that can be transmitted through the fixed polarizer that follows. The rejected light is dumped in AB4, while the light to the photocathode continues on through the polarizer to the periscope at the top of the figure.

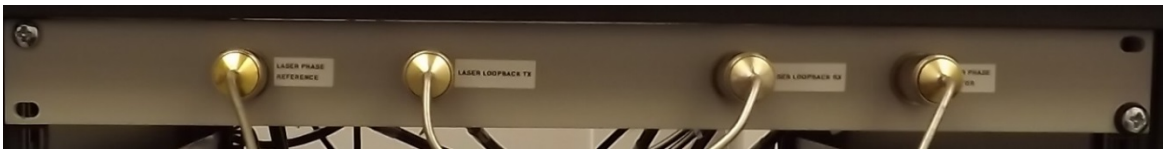

Figure 3. Connections to LLRF. Panel is located at the top of the laser power supply.

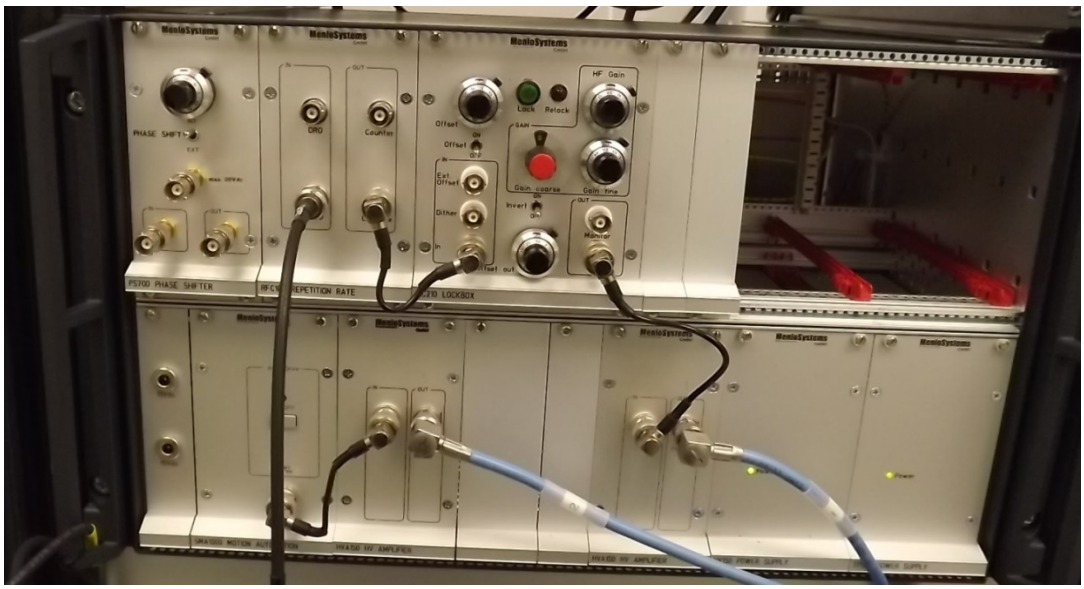

Figure 4. The Menlo Systems RFC 100, for locking the laser to the LLRF. Located on the laser power supply rack, just below the LLRF connection panel.

Figure 5. The SMC 1000 motion controller, for adjusting the laser repetition rate before locking. The difference frequency between the laser and the RF may be observed on an oscilloscope connected to the Monitor port on the RFC 100 Lockbox module. Adjust the repetition rate using the toggle switch, until the difference frequency is reduced to ~<10 Hz, and then press the Lock button. Once locked, actuate the SMA 1000 Motion Control module for coarse tracking.

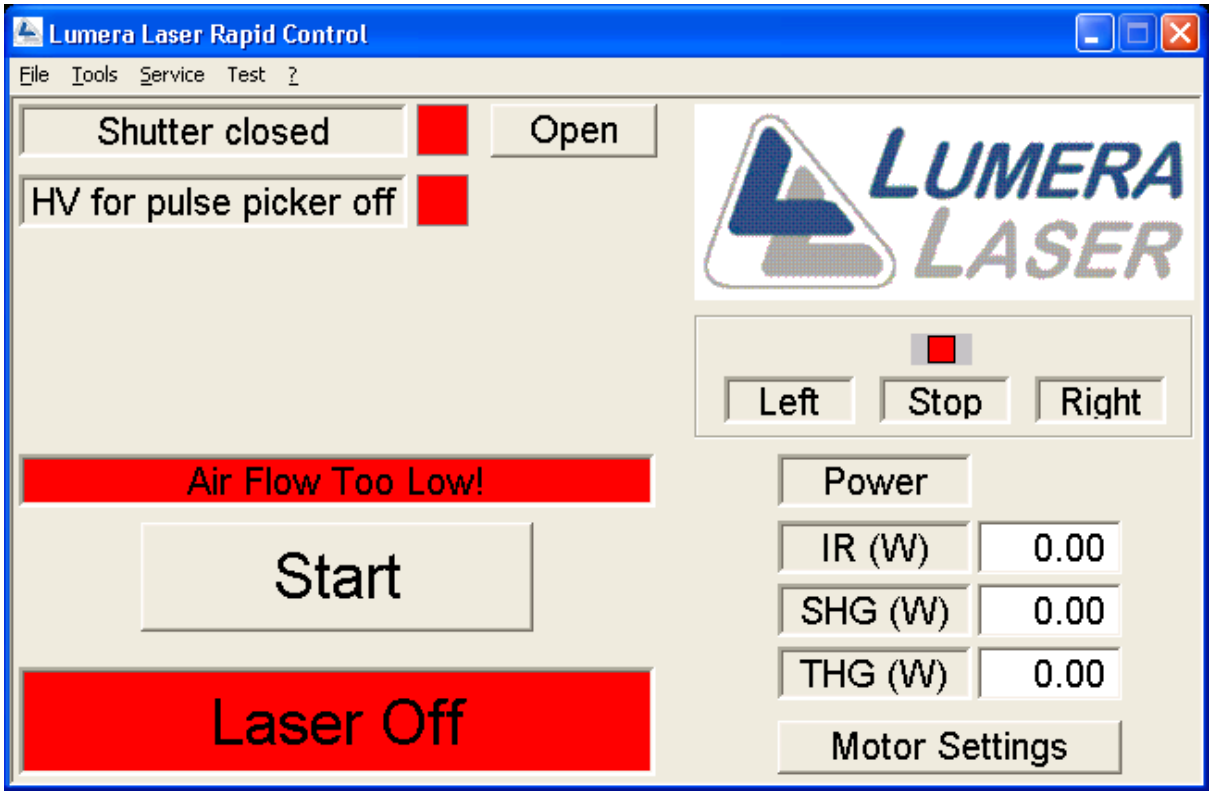

Figure 6. Main GUI for Laser Control program. Shutter is controlled by button on upper left. Power is controlled by the "Motor Settings" button, which opens the submenu in the next figure. When the laser is running, the Start button will read 'Stop', and the red field reading 'Laser Off' will be a green field reading 'Laser On'. The 'Left', 'Stop', 'Right' sequence shows the attenuator status in power regulation mode, which will not be used in low-power testing. The three numerical fields represent the delivered powers in the IR, green, and UV (not presently used).

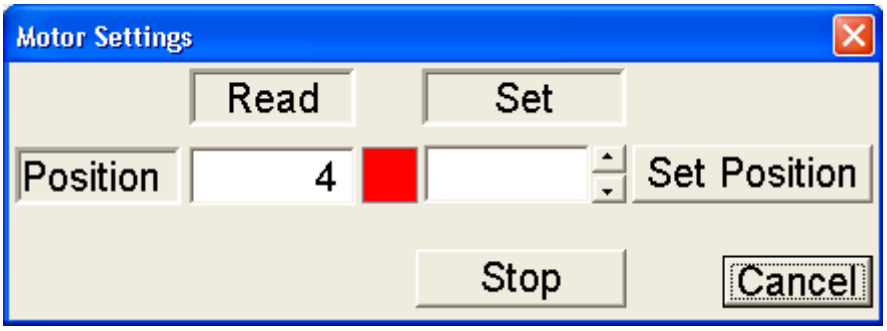

Figure 7. The Motor Settings submenu. The motor rotates a half wave plate which rotates the polarization of the IR beam, and thereby the IR transmission through a polarizer before the frequency-doubling stage. The motor setting ranges from 0 to 100, but the green output power is not linear. The relationship between the two is shown in the next figure. Set the position by using the arrows or entering a number in the right field. The left field reads back the actual position. Press Stop to abort a change in progress. Press Cancel or the red cross in the upper right corner to exit the submenu (current position will be maintained).

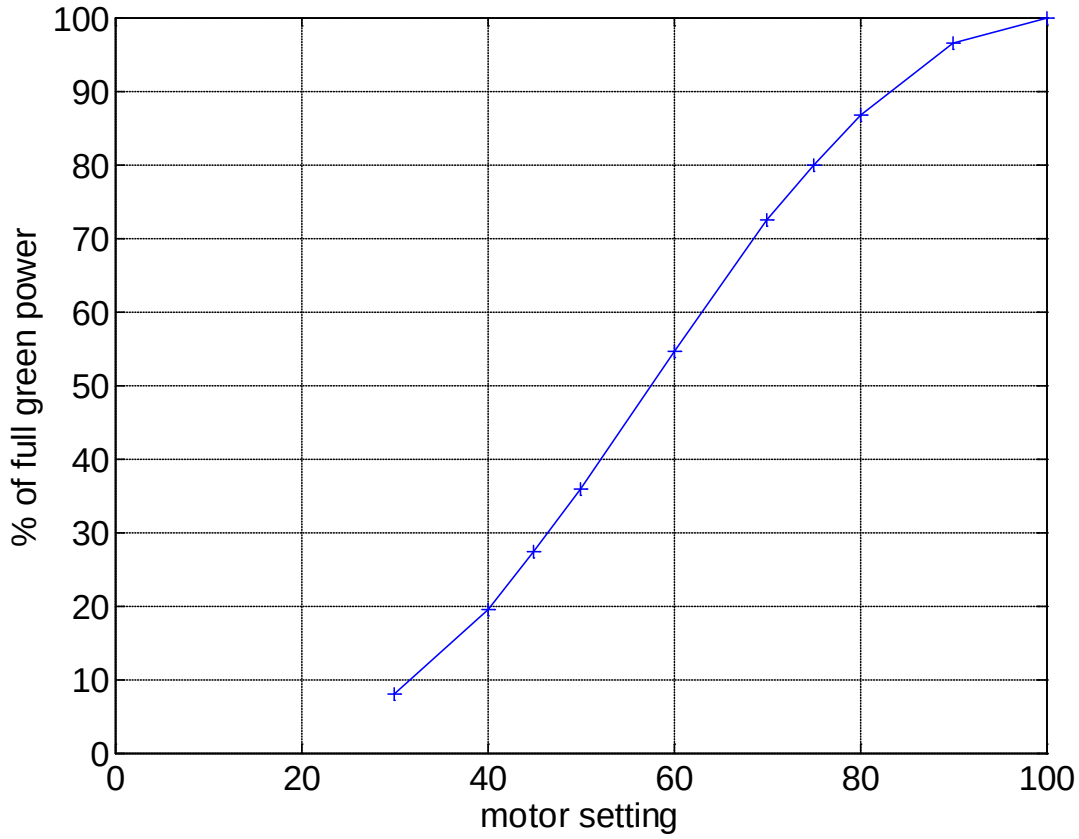

Figure 8. Relationship between the fraction of full green power and the internal Lumera motor setting.

6. Documentation

6.1 ERL e-Log may be found at http://www.cadops.bnl.gov/cgi-bin/elog/elog.pl

7. References

7.1 C-A-OPM 2.5.6, "Commissioning Accelerator Safety Envelope (CASE) Credited Controls and Support for ERL Low Power Testing."

8. Attachments

8.1 "Laser Beam Power Limitation to Assure Electron Beam Power Limitation."
8.2 C-A-OPM-ATT 18.8.5.a, "Laser Configuration Checklist.

Attachment 8.1

Laser Beam Power Limitation to assure electron beam power limitation

The electron beam power will be limited by limiting the maximum possible current produced at the photocathode by the laser. This will be accomplished by introducing a fixed attenuation into the laser beam line and measuring the maximum laser power deliverable to the photocathode, P_{lmax}, at the full laser repetition rate. Once P_{lmax} is determined, the attenuator will be locked out. The value of P_{lmax} must then be entered in the control program and verified by the shift leader. The shift leader will make a notation of the value and the fact that agreement with the program value has been verified on the Radiation Safety Committee (RSC) checkoff list before operation begins. Changes to P_{lmax} during the operations run must also be verified and logged by the shift leader.

The control program uses P_{lmax} to determine maximum values of the parameters that determine the laser duty factor, as described below, and this limits the maximum electron beam power. Different machine tests require different combinations of bunch charge and repetition rate. Larger bunch charges must be run at lower duty factors in order to comply with the maximum beam power requirement. This means that different settings of P_{lmax} are required for different machine tests.

The laser runs internally at a constant repetition rate of 9.38 MHz, and pulses are released to the photocathode through a gated electro-optic switch which can open and close on nanosecond time scales. The frequency f and the width w of the gates are under the control of the control program, and the duty factor χ is equal to their product, $\chi = fw$. As P_{lmax} is measured with the laser running at its full 9.38 MHz repetition rate, the laser power reaching the photocathode is then $P_{lc}=\chi\, P_{lmax}=fwP_{lmax}$. The beam current produced at the photocathode I_c depends on the efficiency ξ, expressed in units of Ampere/Watt*, of the cathode, $I_c = \xi P_{lc}$. The efficiency is measured before the cathode is inserted, and verification of its value in the control program will also be required on the RSC checklist prior to operation.

The control program must then limit values of f and w such that I_c remains below a pre-determined current I_0. The value I_0 of is determined by the maximum beam power P_{beam} allowed by the safety envelope, through the simple relation $P_{\text{beam}}= EI_0$, where E is the maximum beam energy (E = 2 MeV for gun operation). P_{beam} is currently restricted to 70 Watts or less by the DOE exemption, with a further departmental administrative restriction to 7 Watts. Thus for Gun operation, the value of I_0 is 3.5 microamperes.

For example, if we take $P_{lmax}=1W$, and $\xi = 0.86$ mA/W (corresponding to a quantum efficiency of 0.2%), then with I_0 = 3.5 microamperes, we obtain:

$$fw \leq \frac{I_0}{P_{lmax}\xi} = \frac{3.5\times10^{-6}\,A}{(1W)(8.6\times10^{-4}A/W)} = 4.1\times10^{-3}. \quad [1]$$

A further restriction is imposed by the operating limits of the integrating current transformer (ICT), which is used in the low-power test to restrict the total beam current such that the limit on P_{beam} is not exceeded. The operating parameters of the ICT will be to integrate for 10 μsec, followed by a minimum beam-off time of 500 μsec. The maximum frequency f_{max} is thus:

$$f_{max} = \frac{1}{510\ usec} = 1.96\ \text{kHz}. \quad [2]$$

The ICT measures the total charge Q accumulated over the 10 μsec integrations window, and the machine protection system (MPS) monitors the charge and shuts down the beam (by interrupting the laser) if Q exceeds a predetermined threshold Q_{thresh}. Q_{thresh} is set so that I_0 is not exceeded:

$$Q_{\text{thresh}} = I_0 / f_{max}. \quad [3]$$

For I_0 = 3.5 μA and f_{max} = 1.96 kHz, Q_{thresh} = 1.8 nC. Because the ICT measures a charge and not a current, and it is deemed unsafe to make the threshold a dynamic variable that varies with the bunch frequency f, Q_{thresh} is fixed, regardless of the actual value of f. In order to avoid tripping the MPS then, the condition [1] is made into the more restrictive set of two conditions.

$$w \leq \frac{I_0}{f_{max} P_{lmax} \xi}$$
$$f \leq f_{max} \quad [4]$$

These restrictions are implemented in the TimingControl accelerator device object (ADO), which controls the timing of the laser, the ICT, and all diagnostics. A screen shot is shown below. The user configures the bunch frequency (f) and bunch width (w) on the top line, in the Master ADO. Startup values for both of these parameters are zero. Whenever the user attempts to change f or w, the program checks the values against the conditions in [4]. If the conditions are not met, the value cannot be changed.

The conditions [4] depend on the values of I_0, f_{max}, P_{lmax}, and ξ. These inputs only appear on a separate expert page in the ADO. The parameters are set in PET as uneditable and the expert page includes a warning that only the ERL Shift Leader, with the Laser Operator, may change these values, in conformance with ERL procedures. Making the change requires toggling the editable status before making the change. Confirmation of the correct values at the beginning of a shift is a line item on the Radiation Safety Checklist.

The synchronization of the ICT integration window and the laser pulse monitor should be verified on an oscilloscope, as described in the Setup Procedure for ERL ICT Interlock.

* The cathode efficiency is also frequently described by the quantum efficiency, defined as the number of electrons produced per incident photon. The two measures are linearly related, with the coefficient depending on the photon energy/wavelength. For the wavelength of 532 nm being used at the ERL, the relationship is $\xi = QE/2.33$, where QE is expressed as a number between 0 and 1 (not per cent), and ξ is expressed in amps/watt

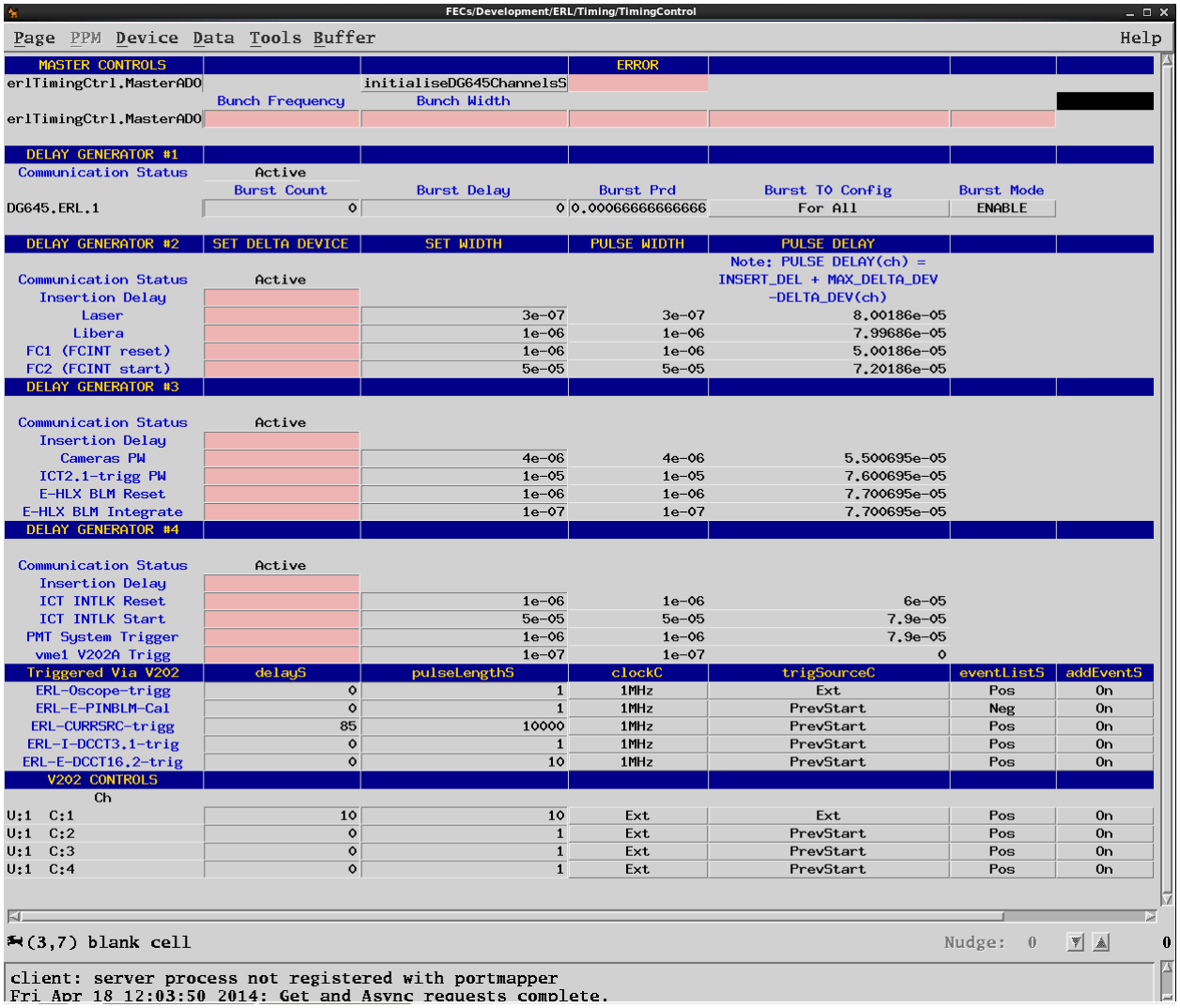

Figure 9. Screenshot of TimingControl ADO. The variables *f* and *w* are input on the top line, and only accepted when the conditions [4] are met.

If you are using a printed copy of this procedure, and not the on-screen version, then you MUST make sure the dates at the bottom of the printed copy and the on-screen version match.
The on-screen version of the Collider-Accelerator Department Procedure is the Official Version.
Hard copies of all signed, official, C-A Operating Procedures are available by contacting the ESSHQ Procedures Coordinator, Bldg. 911A

ATTACHMENT

18.8.5.a Laser Configuration Checklist

C-A OPM Procedures in which this Attachment is used.		
18.8.5		

Hand Processed Changes

HPC No.	Date	Page Nos.	Initials

Approved: _____***Signature with Date on File***_____
Collider-Accelerator Department Chairman Date

B. Sheehy

Laser Configuration Checklist

#	Item	Complete?	Value	Notes
1	Laser optical enclosure secured – all panels in place.			
2	Laser warmup up for at least three hours.			
3	Remote desktop access checked and operating properly.			
4	LLRF connections verified and operational.			
	Reference in			
	Loopback connection			
	Phase error			
5	Lock laser to LLRF reference.		Phase error:	
6	Pulse counting system checked and proper operation checked.			
7	Timing connections checked and pulsed operation verified by observing detector signal on scope.			
8	Recorded desired bunch charge:		*Q:*	
9	Record expected value of QE:		Expected QE:	
10	Record value of Elmax:		Elmax:	
11	Record final value of Plmax:		Plmax:	
12	Lock external attenuator:			
13	Set laser to gated mode.			
14	Open shutter 3 and check for beam current. Record value:		Beam current:	
15	Laser configured and operational.			

Laser Operator Signature: _____ Date:_____ _____

If you are using a printed copy of this procedure, and not the on-screen version, then you MUST make sure the dates at the bottom of the printed copy and the on-screen version match.
The on-screen version of the Collider-Accelerator Department Procedure is the Official Version.
Hard copies of all signed, official, C-A Operating Procedures are available by contacting the ESSHQ Procedures Coordinator, Bldg. 911A

18.8.6.1 Setup Procedure for ERL ICT Interlock

Hand Processed Changes

HPC No.	Date	Page Nos.	Initials
_____	_____	_____	_____
_____	_____	_____	_____
_____	_____	_____	_____

Approved: _____***Signature with Date on File***_____
Collider-Accelerator Department Chairman Date

L. Hammons

1. Purpose

1.1. This setup procedure for the ICT interlock is to assist in maintaining requirements necessary for the ERL Low Power Test, C-A-OPM 2.5.6, "Commissioning Accelerator Safety Envelope (CASE) Credited Controls and Supports for ERL Low Power Testing".

1.2. The integrated output of the beam charge measured by the Bergoz ICT must remain under a given threshold, dependent on beam operating mode, to satisfy operations with less than 70W averaged in one hour.

1.3. A Bergoz Integrating Current Transformer (ICT) is installed in the beamline with its associated electronics installed in the adjacent service building (trailer). The electronics consist of an Isolation Transformer, Bergoz BCM-IHR module, an Impedance ('Z') Match module, a Phillips Scientific Amplifier, remote oscilloscope, and an 8-channel integrator whose analog output is delivered to the Machine Protection System (MPS). The MPS will monitor the analog output and trip when it is above the threshold for the operating beam mode. See Figure 1 for a block diagram.

1.3.1. The Isolation Transformer and Impedance Match module have no adjustments or setup required and are not further addressed in this procedure.

1.3.2. The Phillips Scientific Amplifier is configured to a gain of x1 by system experts only and is not further addressed in this procedure.

1.3.3. The configuration of the Bergoz BCM-IHR and 8 Channel Integrator is subject to change based on beam operating modes and is addressed in Section 5 of this procedure. The remote scope will be used to assist in correctly configuring these two items.

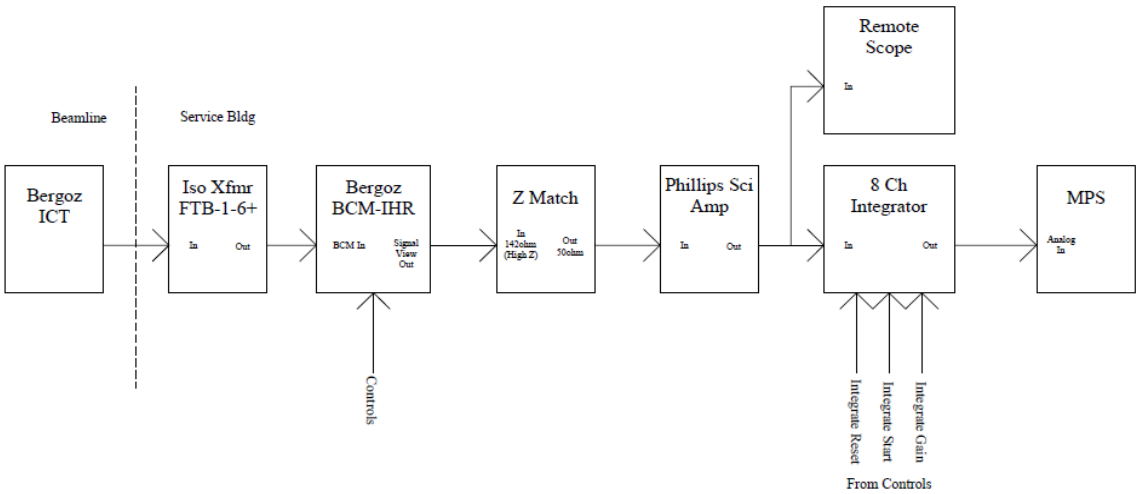

Figure 1 – Block Diagram of the Interlock Hardware

2. Responsibilities

2.1. The ERL Operations Coordinator or ERL Shift Leader are responsible for checking that the MPS threshold for monitoring the ICT output is correct and that the integrator window width is reasonable (i.e. the integrator window width completely encompasses the beam pulse, see Figure 2) for the operating beam mode.

3. Prerequisites

3.1. The Integrating Current Transformer system and the Machine Protection System are operational.

3.2. The target group for this procedure is the ERL Operations Coordinator or ERL Shift Leader.

3.3. The training requirement for this procedure is read and sign.

3.4. The minimum number of staff members that need to be trained in order for this procedure to be effective is one ERL Shift Leader.

4. Precautions

4.1. The integrate window must be set appropriately. A too-short window could under-report beam that is being sent down the beamline. A too-long window, provided it does not spill into the next pulse train, would be a safe condition since it would be integrating 'dead-time' (noise). A too-long window could generate a false-failure in a safe condition.

4.2. The ICT is limited in the length of macropulses and gap between macropulses that it can measure. Table 1 indicates the beam macropulse parameters that have been tested in the lab, with required gap time between macropulses. If these conditions are not met, there is possibility for an unsafe condition as the ICT may not be able to measure the beam appropriately.

4.2.1. For the ERL Low Power Test, the macropulse parameters from the last line of Table 1 will be used. That is, the maximum macropulse will be fixed at 10 μsec, and a minimum of a 500 μsec gap will be maintained between macropulses.

Note:
While only three distinct micropulse patterns are listed in Table 1, the ICT will be able to measure micropulses in between a quantity of 10 - 100. It is recommended for any micropulse quantity not specifically mentioned in the table to use a gap of 500 μs between macropulses.

Table 1 – Beam Parameters Required for Proper ICT Measurements

Number of Micropulses in One Macropulse	Length of Macropulse	Recommended Gap Between Macropulses
10	1 μs	200 μs
50	5 μs	Minimum 200 μs 500 μs preferred
100	10 μs	500 μs

5. Procedure

5.1. Verify the BCM-IHR gain and Integrator gain at pet pages based on the calibration chart in Appendix I for expected beam.

5.1.1. BCM-IHR gain control should be set to 26dB and can be found at pet/FECs/Development/ERL/Instrumentation/XFMR,deviceerl-i ict2.1.Gain

5.1.2. Integrator gain control should be set to high and can be found at pet/FECs/Development/ERL/Instrumentation/XFMR,deviceerl-i-ict2.1.IntlkGain

5.2. Verify that the MPS trip level has been set to -2.5V based on the setpoints given in the previous section, 5.1, and expected beam levels.

5.2.1. If the gain of the BCM-IHR or Integrator is approved to be changed, the MPS trip level will need to be changed to an appropriate value for the new settings.

5.3. The two timing triggers, Integrate Reset and Integrate Start, will be set up to trigger off the DG645.

5.3.1. Integrate Reset control is at pet/FECs/Development/ERL/Timing/TimingControl, Delay Generator #4, device ictINTLKINTReset

5.3.1.1. The Integrate Reset needs to be a minimum of 10 μs wide. The width is adjusted in the “SET WIDTH” column

5.3.1.2. The column “PULSE WIDTH(sec)” is a readback and should match what has been set in previous step, 5.3.1.1.

5.3.1.3. The Integrate Reset delay is set in the column “SET DELTA DEVICE(sec)”.

5.3.1.4. The column “PULSE DELAY(sec)” is a readback. The pulse delay readback is calculated by the equation at the top of the pet page, and uses as an input the delay set in the previous step, 5.3.1.3.

5.3.2. Integrate Start control is at pet/FECs/Development/ERL/Timing/TimingControl, Delay Generator #4, device ictINTLKINTStart

5.3.2.1. The Integrate Start requires a minimum delay after the reset of 50 μs. This can be checked by comparing the values in the readback column “PULSE DELAY(sec)”.

5.3.2.2. If the delay is not 50 μs, you will need to either adjust the delay for this device in the column marked “SET DELTA DEVICE(sec)” or go back to step 5.3.1.3 and move that delay earlier.

5.3.2.3. The width of the integrate window, which must be set to completely enclose the entire beam pulse, is set in the column “SET WIDTH”.

5.3.2.4. The column “PULSE WIDTH(sec)” is a readback and should match what has been set in the previous step, 5.3.2.3.

Note:

The ICT BCM-IHR electronics provide a pulse with a slower rise time irrespective of the beam pulse rise time. All temporal characteristics of the beam are lost with this type of transformer. The output pulse charge is in exact proportion to the beam pulse charge.

5.4. To assist and ensure that the timing gates set in steps 5.3.1 and 5.3.2 are properly set up to enclose the beam pulse, one should use the remote oscilloscope to view both the integrator timing gate and the beam-equivalent output of the Bergoz BCM-IHR electronics.

5.4.1. In a java-enabled internet browser, type the IP address of the scope into the address bar, 130.199.35.147. The picture in Figure 1 is representative of what could be seen on the browser. The integrate gate will be on Channel 1, and the beam-equivalent output will be on Channel 2.

5.4.2. The timing parameters are correct if the integrate gate completely encompasses the beam-equivalent output.

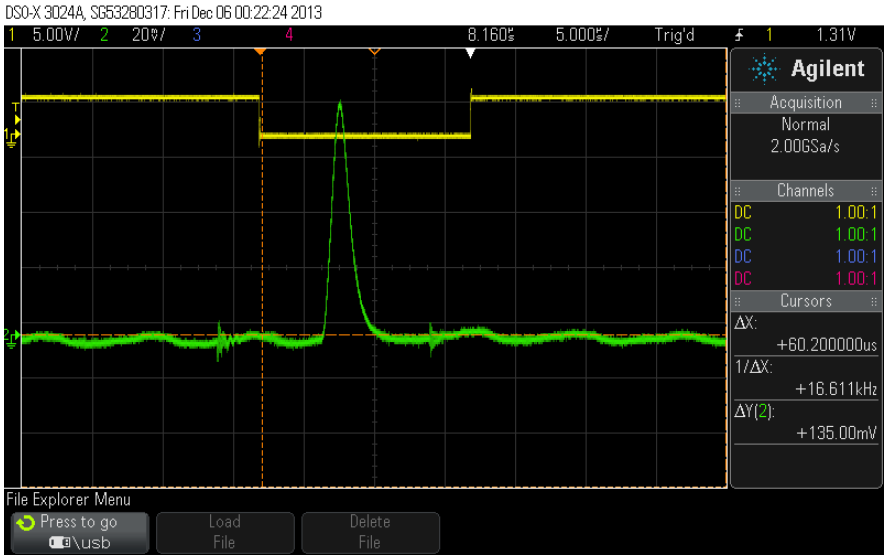

Figure 2 – Representative scope picture with integrate gate on Channel 1 (top trace) and beam-equivalent output on Channel 2 (bottom trace). The beam-equivalent output will change in amplitude and duration depending on the macropulse parameters.

6. Documentation

6.1. ERL e-log

7. References

7.1. C-A-OPM 2.5.6, “Commissioning Accelerator Safety Envelope (CASE) Credited Controls and Support for ERL Low Power Testing"

7.2. Appendix I – Integrator Output Voltages for BCM-IHR Calibration Pulses

8. Attachments

None

Appendix I – Integrator Output Voltages for BCM-IHR Calibration Pulses

How to use the Calibration Chart:

Charges from 0.5nC to 5nC were measured using a 20:1 turns ratio transformer and the output voltage was measured using the high setting of the 180/20pF eight-channel integrator (column "Integrator Hi Output 20:1"). The data was taken for three different settings of the BCM-IHR electronics: 26dB, 32dB, and 40dB.

The 20:1 turns ratio transformer has a sensitivity of 1.5Vs/C. The installed ERL transformer is a 5:1 turns ratio transformer with a sensitivity of 5Vs/C, or a factor of 4 greater sensitivity. The data listed in the column, "Expected Output 5:1" is extrapolated based on the difference in sensitivity.

It is expected for the low power beam test that the BCM-IHR gain setting of 26dB will be used.

Using the 180/20 pF integrator:

Beam Charge	BCM-IHR Gain	Integrator Hi Output 20:1	Expected Output 5:1
0.5nC	26dB	-123.75mV	-495mV
1nC	26dB	-250mV	-1V
1.5nC	26dB	-362.5mV	-1.45V
2nC	26dB	-465mV	-1.86V
2.5nC	26dB	-600mV	-2.4V
3nC	26dB	-718.75mV	-2.875V
3.5nC	26dB	-837.5mV	-3.35V
4nC	26dB	-956.25mV	-3.825V
4.5nC	26dB	-1.075V	-4.3V
5nC	26dB	-1.2V	-4.8V
0.5nC	32dB	-277.5mV	-1.11V
1nC	32dB	-517.5mV	-2.07V
1.5nC	32dB	-750mV	-3V
2nC	32dB	-993.75mV	-3.975V
2.5nC	32dB	-1.23125V	-4.925V
3nC	32dB	-1.4875V	-5.95V
3.5nC	32dB	-1.725V	-6.9V
4nC	32dB	-1.9625V	-7.85V
4.5nC	32dB	-2.2V	-8.8V
5nC	32dB	-2.4375V	-9.75V
0.5nC	40dB	-762.5mV	-3.05V
1nC	40dB	-1.3625V	-5.45V
1.5nC	40dB	-1.9875V	-7.95V
2nC	40dB	-2.5625V	-10.25V
2.5nC	40dB	-3.15V	-12.6V
3nC	40dB	-3.5V	-14V
3.5nC	40dB	-3.95V	-15.8V
4nC	40dB	-4.525V	-18.1V
4.5nC	40dB	-5.05V	-20.2V
5nC	40dB	-5.6V	-22.4V

If you are using a printed copy of this procedure, and not the on-screen version, then you MUST make sure the dates at the bottom of the printed copy and the on-screen version match. The on-screen version of the Collider-Accelerator Department Procedure is the Official Version. Hard copies of all signed, official, C-A Operating Procedures are available by contacting the ESSHQ Procedures Coordinator, Bldg. 911A

C-A OPERATIONS PROCEDURES MANUAL

18.8.6.5 ERL Machine Protection System (MPS)

E010610002

Test Procedure

Hand Processed Changes

HPC No.	Date	Page Nos.	Initials

Approved: _____***Signature w/Date on File***_____
Collider-Accelerator Department Chairman Date

D. Kayran

1.0 Scope

This Document describes the tests required to assess the performance of the ERL Machine Protection System (MPS)

The requirements specified herein are to determine ERL MPS performance when subjected to the specific tests outlined in this procedure. The sequence of tests need not necessarily be performed in the order as presented in this document, with the understanding that certain tests are interrelated and may be performed simultaneously.

2.0 Responsibilities

2.1 The ERL System Specialists shall perform the required test and using APPENDEX 1, Test Data Sheet; ERL MPS document completion by initialing the appropriate column, i.e. PASS or FAIL. .

2.2 The ERL Project Leader shall review and approve the completed test report.

3.0 Requirements

The ERL MPS Wiring Diagram

The equipment listed below is used in normal operation setup. All wiring to the ERL MPS I/O shall be according to Table 1 "ERL MPS I/O listing" and the ERL MPS Wiring Diagram. Figure 1 illustrate the system block diagram.

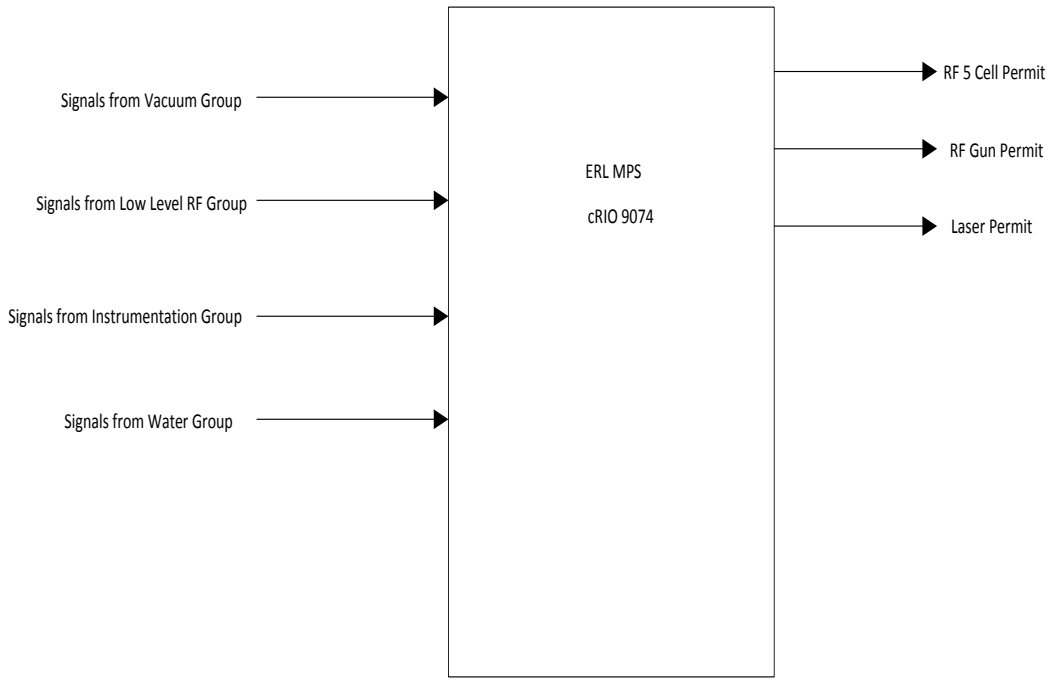

Figure 1

3.1 MPS SYSTEM AND OPERATIONAL REQUIREMENT

3.1.1 MPS COMPONENTS

NI Chassis (cRIO – 9074) with
Module 1 – NI 9425
Module 2 – NI 9402
Module 3 – NI 9223
Module 4 – NI 9401

Module 5 – NI 9401
Module 6 – NI 9401
Module 7 – NI 9401

3.1.2 cRIO FPGA Software

The cRIO must have the following FPGA software installed: "MPSproject_FPGATarget_CETv71_E03789E5.lvbitx".

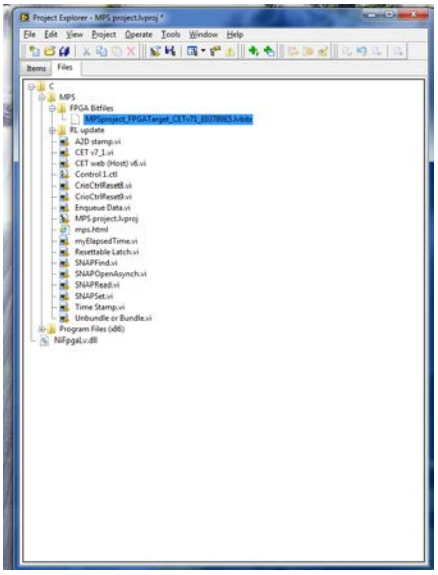

The Control software requires "erlFaultMan" be running.

3.1.3 PC and LabView Requirements

A PC with operation system "Window 7 Professional" with Service Pack 1 or latest installed. Labview 2011 (32-bit) with Service Pack 1 or latest (using later versions of Labview 2011 may require cRIO drivers update). ERL MPS project (TBD) must be loaded.

4 ACCEPTANCE TESTING

Each input shall have its “fault” and “OK” states exercised. (A cognizant expert from each group will help to simulate the fault for each of the inputs under test) The results will be monitored on the applicable MPS PET page. (RF 5-Cell permit, RF Gun permit, and/or Laser Permit) Once the simulated fault has been verified, the fault will be removed and the MPS PET page will be monitored to ensure the ERL MPS returns its normal state (OK state). The Operator shall record the results of each test with the data sheet provided in Appendix A. If necessary, each input can be Enabled/Disabled from the ERL MPS PET page.

4.1 PET Page Setup

4.1.1 Signing into BNL LINUX system account

4.1.2 Opening PET page for ERL MPS by Select FECs -> Development -> ERL -> MPS -> FaultSystem

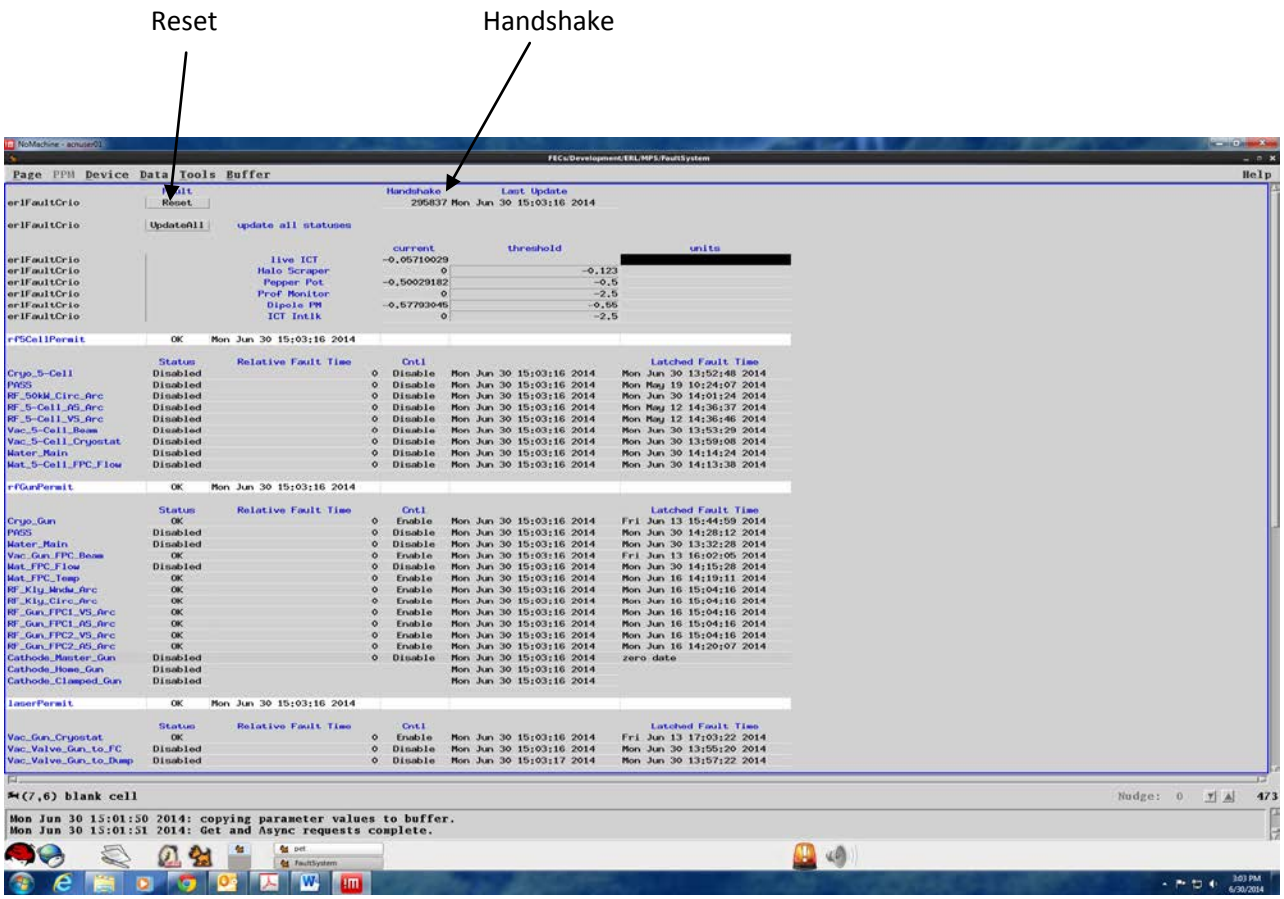

Figure 2

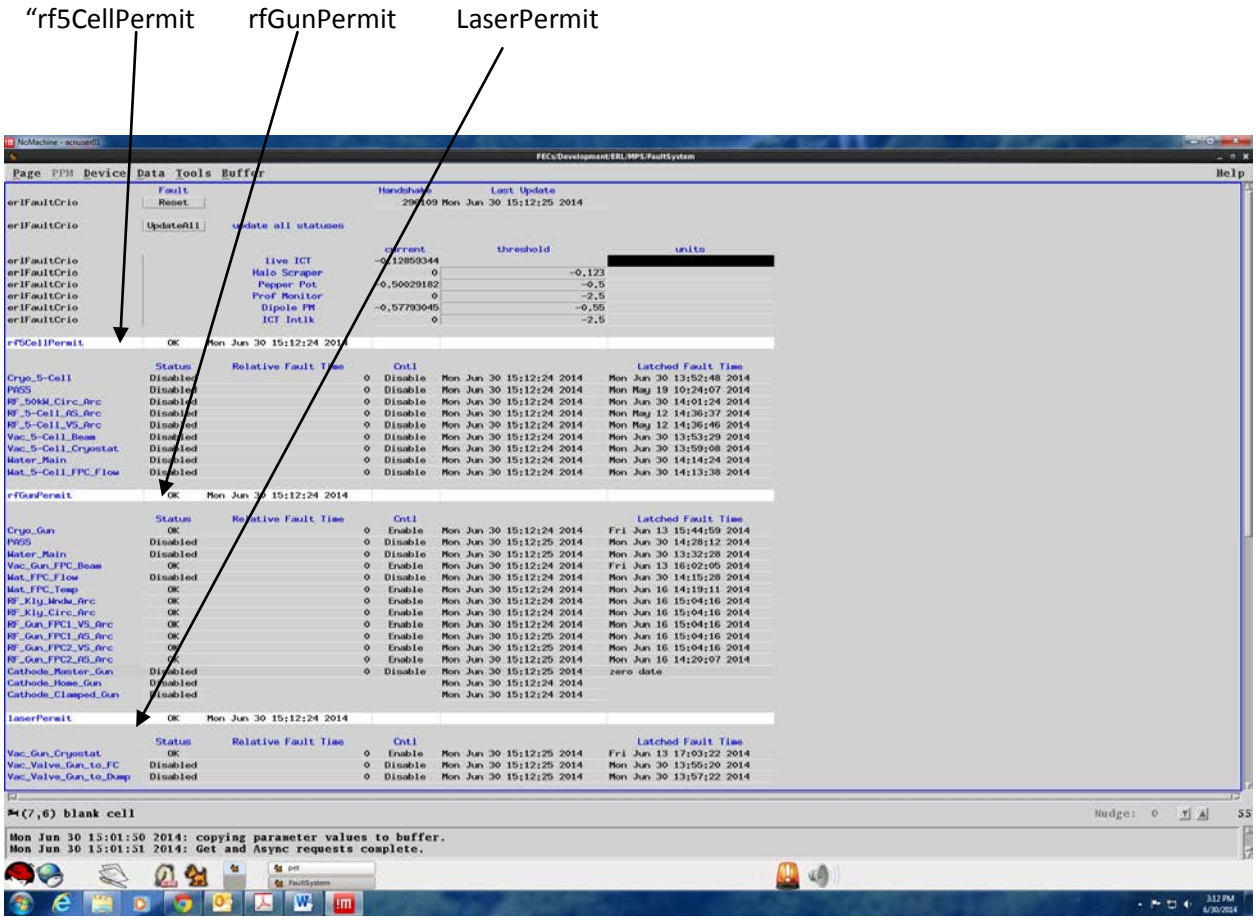

Figure 3

4.1.3 Monitor "Handshake" parameter, Located at the top of the screen, the number in the parameter is incremented at the rate of about once per second. It indicates the Control System is communicating with the ERL MPS. If not, stop the test and contact Control Group for assistance.

4.1.4 Each input can be set to "Enable" or "Disable" to detect its fault. All inputs shall be in "Enable Mode" under parameter "Cntl". Change to "Enable" when needed. To change the mode from "Disable" to "Enable" or "Enable" to "Disable", highlight the desired Cell by putting the cursor over it then left click it. Once the Cell is highlighted, from the tool Bar Manu select Data→ Set Cell Editable. Go back to the Cell, put the cursor on it then left click it. Now one can select "Enable" or "Disable" from a small drop-down menu that pops from the cell.

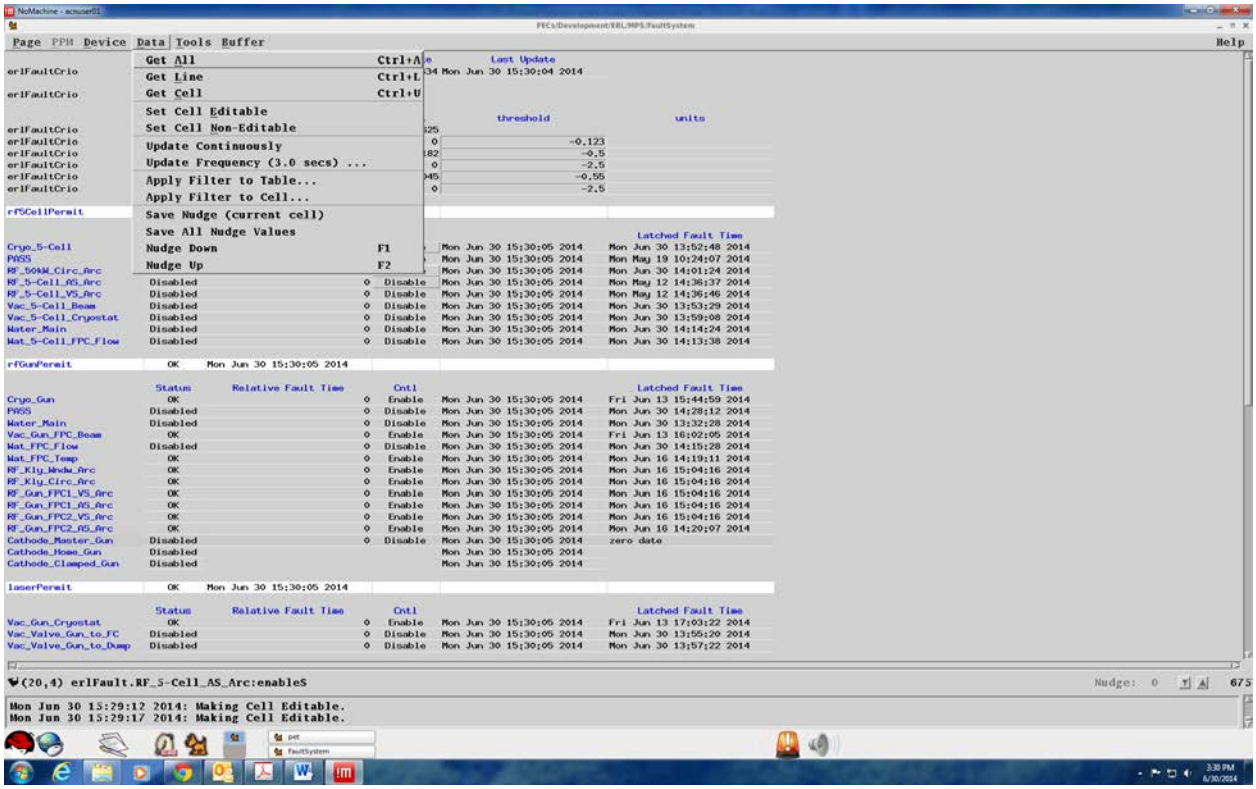

Figure 4

4.1.5 Monitor the PET page screen, if any signals with “Fault” appear in their status column, clear the fault. To clear the fault, Press “RESET” button twice quickly. The Reset button is located on the top left page. If any faults can’t be cleared, consult with the ERL system expert before continuing or stop the tests. After all faults are cleared “rf5CellPermit”, “rfGunPermit” and “LaserPermit” status shall display “Ok”. These statuses can be found highlighted in white on the PET page. See Figure 3. ERL MPS is now ready for testing.

4.2 CRYOGENIC TEST

An expert from Cryogenic Group shall be present to assist with the following tests:

4.2.1 Cryo_5-Cell

4.2.1.1 Ask Cryogenic expert to simulate “Cryo_5-Cell” fault , Monitor “Cryo_5-Cell”, “rf5CellPermit” and “LaserPermit” status change from “OK” to “fault”. Record the results on Data Sheet.

4.2.1.2 Remove “Cryo_5-Cell” fault, press “Reset” button twice quickly to clear the fault . Monitor “Cryo_5-Cell”, “rf5CellPermit” and “LaserPermit” status change from “fault” to “OK”. Record the results on Data Sheet.

4.2.2 Cryo_Gun

4.2.2.1 Ask Cryogenic expert to simulate “Cryo_Gun” fault, Monitor “Cryo_Gun”, “rfGunPermit” and “LaserPermit” status change from “OK” to “fault”. Record the results on Data Sheet

4.2.2.2 Remove “Cryo_Gun” fault, press “Reset” button twice quickly to clear the fault . Monitor “Cryo_Gun”, “rfGunPermit” and “LaserPermit” status change from “fault ” to “OK”. Record the results on Data Sheet.

4.3 Vacuum Tests

An expert from Vacuum Group shall be present to assist with the following tests:

4.3.1 Vac_5-Cell_Beam

4.3.1.1 Ask Vacuum expert to simulate “Vac_ 5-Cell_Beam” fault, Monitor “Vac_ 5-Cell_Beam”, “rf5CellPermit” and “LaserPermit” status change from “OK” to “fault”. Record the results on Data Sheet.

4.3.1.2 Remove “Vac_ 5-Cell_Beam” fault, press “Reset” button twice quickly to clear the fault. Monitor “Vac_ 5-Cell_Beam”, “rf5CellPermit” and “LaserPermit” status change from “fault” to “OK”. Record the results on Data Sheet.

4.3.2 Vac_Gun_FPC_Beam

4.3.2.1 Ask Vacuum expert to simulate “Vac_ Gun_FPC_Beam” fault, Monitor “Vac_ Gun_FPC_Beam”,“rfGunPermit” and “LaserPermit” status change from “OK” to “fault”. Record the results on Data Sheet.

4.3.2.2 Remove “Vac_ Gun_FPC_Beam” fault, press “Reset” button twice quickly to clear the faults. Monitor “Vac_ Gun_FPC_Beam”, “rfGunPermit” and “LaserPermit” status change from “fault” to “OK”. Record the results on Data Sheet.

4.3.3 Vac_Gun_Cryostat

4.3.3.1 Ask Vacuum expert to simulate “Vac_ Gun_Cryostat” fault, Monitor “Vac_ Gun_Cryostat”, and “LaserPermit” status change from “OK” to “fault”. Record the results on Data Sheet.

4.3.3.2 Remove “Vac_ Gun_Cryostat” fault, press “Reset” button twice quickly to clear the faults. Monitor “Vac_ Gun_Cryostat”, and “LaserPermit” status change from “fault” to “OK”. Record the results on Data Sheet.

4.3.4 Vac_Valve_Gun_to_FC

4.3.4.1 Ask Vacuum expert to simulate “Vac_ Valve_Gun_to_FC” fault, Monitor “Valve_Gun_to_FC” and “LaserPermit” status change from “OK” to “fault”. Record the results on Data Sheet.

4.3.4.2 Remove “Vac_ Valve_Gun_to_FC” fault, press “Reset” button twice quickly to clear the faults. Monitor “Vac_ Valve_Gun_to_FC” and “LaserPermit” status change from “fault” to “OK”. Record the results on Data Sheet.

4.3.5 Vac_Valve_Gun_to_Dump

4.3.5.1 Ask Vacuum expert to simulate “Vac_ Valve_Gun_to_Dump” fault, Monitor “Vac_ Valve_Gun_to_Dump” and “LaserPermit” status change from “OK” to “fault”. Record the results on Data Sheet.

4.3.5.2 Remove “Vac_ Valve_Gun_to_Dump” fault, press “Reset” button twice quickly to clear the faults. Monitor “Vac_ Valve_Gun_to_Dump” and “LaserPermit” status change from “fault” to “OK”. Record the results on Data Sheet.

4.3.6 Vac_Valve_Loop

4.3.6.1 Ask Vacuum expert to simulate “Vac_Valve_Loop” fault, Monitor “Vac_ Valve_Loop” and “LaserPermit” status change from “OK” to “fault”. Record the results on Data Sheet.

4.3.6.2 Remove “Vac_Valve_Loop” fault, press “Reset” button twice quickly to clear the faults. Monitor “Vac_Valve_Loop” and “LaserPermit” status change from “fault” to “OK”. Record the results on Data Sheet.

4.3.7 Vac_5-Cell_Cryostat

4.3.7.1 Ask Vacuum expert to simulate “Vac_5-Cell_Cryostat” fault, Monitor “Vac_5-Cell_Cryostat”,”rf5CellPermit” and “LaserPermit” status change from “OK” to “fault”. Record the results on Data Sheet.

4.3.7.2 Remove “Vac_5-Cell_Cryostat” fault, press “Reset” button twice quickly to clear the faults. Monitor “Vac_5-Cell_Cryostat”, ”rf5CellPermit” and “LaserPermit” status change from “fault” to “OK”. Record the results on Data Sheet.

4.4 RF Tests

An expert from RF Group shall be present to assist with the following tests:

4.4.1 RF_50KW_Circ_Arc

4.4.1.1 Ask RF expert to simulate "RF_50KW_Circ_Arc" fault, Monitor "RF_50KW_Circ_Arc", "rf5CellPermit" and "LaserPermit" status change from "OK" to "fault". Record the results on Data Sheet.

4.4.1.2 Remove "RF_50KW_Circ_Arc" fault, press "Reset" button twice quickly to clear the fault. Monitor "RF_50KW_Circ_Arc", "rf5CellPermit" and "LaserPermit" status change from "fault" to "Ok". Record the results on Data Sheet.

4.4.2 RF_5-Cell_AS_ARC

4.4.2.1 Ask RF expert to simulate "RF_5-Cell_AS_ARC" fault, Monitor "RF_5-Cell_AS_ARC", "rf5CellPermit" and "LaserPermit" status change from "OK" to "fault". Record the results on Data Sheet.

4.4.2.2 Remove "RF_5-Cell_AS_ARC" fault, press "Reset" button twice quickly to clear the faults. Monitor "RF_5-Cell_AS_ARC", "rf5CellPermit" and "LaserPermit" status change from "fault" to "OK". Record the results on Data Sheet.

4.4.3 RF_5-Cell_VS_ARC

4.4.3.1 Ask RF expert to simulate "RF_5-Cell_VS_ARC" fault, Monitor "RF_5-Cell_VS_ARC", "rf5CellPermit" and "LaserPermit" status change from "OK" to "fault". Record the results on Data Sheet.

4.4.3.2 Remove "RF_5-Cell_VS_ARC" fault, press "Reset" button twice quickly to clear the faults. Monitor "RF_5-Cell_VS_ARC", "rf5CellPermit" and "LaserPermit" status change from "fault" to "OK". Record the results on Data Sheet.

4.4.4 RF_Kly_Wndw_Arc

4.4.4.1 Ask RF expert to simulate "RF_Kly_Wndw_Arc" fault, Monitor "RF_Kly_Wndw_Arc", "rfGunPermit" and "LaserPermit" status change from "OK" to "fault". Record the results on Data Sheet.

4.4.4.2 Remove "RF_Kly_Wndw_Arc" fault, press "Reset" button twice quickly to clear the faults. Monitor "RF_Kly_Wndw_Arc", "rfGunPermit" and "LaserPermit" status change from "fault" to "OK". Record the results on Data Sheet.

4.4.5 RF_Kly_Circ_Arc

4.4.5.1 Ask RF expert to simulate "RF_Kly_Circ_Arc" fault, Monitor "RF_Kly_Circ_Arc", "rfGunPermit" and "LaserPermit" status change from "OK" to "fault". Record the results on Data Sheet.

4.4.5.2 Remove "RF_Kly_Circ_Arc" fault, press "Reset" button twice quickly to clear the faults. Monitor "RF_Kly_Circ_Arc", "rfGunPermit" and "LaserPermit" status change from "fault" to "OK". Record the results on Data Sheet.

4.4.6 RF_Gun_FPC1_VS_Arc

4.4.6.1 Ask RF expert to simulate "RF_Gun_FPC1_VS_Arc" fault, Monitor "RF_Gun_FPC1_VS_Arc", "rfGunPermit" and "LaserPermit" status change from "OK" to "fault". Record the results on Data Sheet.

4.4.6.2 Remove "RF_Gun_FPC1_VS_Arc" fault, press "Reset" button twice quickly to clear the faults. Monitor "RF_Gun_FPC1_VS_Arc", "rfGunPermit" and "LaserPermit" status change from "fault" to "OK". Record the results on Data Sheet.

4.4.7 RF_Gun_FPC1_AS_Arc

4.4.7.1 Ask RF expert to simulate "RF_Gun_FPC1_AS_Arc" fault, Monitor "RF_Gun_FPC1_AS_Arc", "rfGunPermit" and "LaserPermit" status change from "OK" to "fault". Record the results on Data Sheet.

4.4.7.2 Remove "RF_Gun_FPC1_AS_Arc" fault, press "Reset" button twice quickly to clear the faults. Monitor "RF_Gun_FPC1_AS_Arc", "rfGunPermit" and "LaserPermit" status change from "fault" to "OK". Record the results on Data Sheet.

4.4.8 RF_Gun_FPC2_VS_Arc

4.4.8.1 Ask RF expert to simulate "RF_Gun_FPC2_VS_Arc" fault, Monitor "RF_Gun_FPC2_VS_Arc", "rfGunPermit" and "LaserPermit" status change from "OK" to "fault". Record the results on Data Sheet.

4.4.8.2 Remove "RF_Gun_FPC2_VS_Arc" fault, press "Reset" button twice quickly to clear the faults. Monitor "RF_Gun_FPC2_VS_Arc", "rfGunPermit" and "LaserPermit" status change from "fault" to "OK". Record the results on Data Sheet.

4.4.9 RF_Gun_FPC2_AS_Arc

4.4.9.1 Ask RF expert to simulate "RF_Gun_FPC2_AS_Arc" fault, Monitor "RF_Gun_FPC2_AS_Arc", "rfGunPermit" and "LaserPermit" status change from "OK" to "fault". Record the results on Data Sheet.

4.4.9.2 Remove "RF_Gun_FPC2_AS_Arc" fault, press "Reset" button twice quickly to clear the faults. Monitor "RF_Gun_FPC2_AS_Arc", "rfGunPermit" and "LaserPermit" status change from "fault" to "OK". Record the results on Data Sheet.

4.4.10 RF_50KW_Amp

4.4.10.1 Ask RF expert to simulate “RF_50KW_Amp” fault, Monitor “RF_50KW_Amp” and “LaserPermit” status change from “OK” to “fault”. Record the results on Data Sheet.

4.4.10.2 Remove “RF_50KW_Amp” fault, press “Reset” button twice quickly to clear the faults. Monitor “RF_50kW_Amp” and “LaserPermit” status change from “fault” to “OK”. Record the results on Data Sheet.

4.4.11 RF_Klystron

4.4.11.1 Ask RF expert to simulate “RF_Klystron” fault, Monitor “RF_Klystron” and “LaserPermit” status change from “OK” to “fault”. Record the results on Data Sheet.

4.4.11.2 Remove “RF_Klystron” fault, press “Reset” button twice quickly to clear the faults. Monitor “RF_Klystron” and “LaserPermit” status change from “fault” to “OK”. Record the results on Data Sheet.

4.4.12 LLRF Ready

4.4.12.1 Ask RF expert to simulate “LLRF Ready” fault, Monitor “LLRF Ready” and “LaserPermit” status change from “OK” to “fault”. Record the results on Data sheet.

4.4.12.2 Remove “LLRF Ready” fault, press “Reset” button twice quickly to clear the faults. Monitor “LLRF Ready” and “LaserPermit” status change from “fault” to “OK”. Record the results on Data Sheet.

4.4.13 LLRF Field Stable

4.4.13.1 Ask RF expert to simulate “LLRF Field Stable” fault, Monitor “LLRF Field Stable”, and “LaserPermit” status change from “OK” to “fault”. Record the results on Data Sheet.

4.4.13.2 Remove “LLRF Field Stable” fault, press “Reset” button twice quickly to clear the faults. Monitor “LLRF Field Stable” and “LaserPermit” status change from “fault” to “OK”. Record the results on Data Sheet.

4.5 HTS_Solenoid_Main Test

An expert from Power Supply Group shall be present to assist the following tests:

4.5.1 HTS_Solenoid_Main

4.5.1.1 Ask Power Supply expert to simulate “HTS_Solenoid_Main” fault, Monitor “HTS_Solenoid_Main”, and “LaserPermit” status change from “OK” to “fault”. Record the results on Data Sheet.

4.5.1.2 Remove “HTS_Solenoid_Main” fault, press “Reset” button twice quickly to clear the faults. Monitor “HTS_Solenoid_Main” and “LaserPermit” status change from “fault” to “OK”. Record the results on Data Sheet.

4.6 Water Tests

An expert from Water Supply Group shall be present to assist the following tests :

4.6.1 Water_Main

4.6.1.1 Ask Water Supply expert to simulate “Water_Main” fault, Monitor “Water_Main”, “rf5CellPermit” and “LaserPermit” status change from “OK” to “fault”. Record the results on Data Sheet.

4.6.1.2 Remove “Water_Main” fault, press “Reset” button twice quickly to clear the faults. Monitor “Water_Main”, “rf5CellPermit” and “LaserPermit” status change from “fault” to “OK”. Record the results on Data Sheet.

4.6.2 Wat_5-Cell_FPC_Flow

4.6.2.1 Ask Water Supply expert to simulate “Wat_5-Cell_FPC_Flow” fault, Monitor “Wat_5-Cell_FPC_Flow”, “rf5CellPermit” and “LaserPermit” status change from “OK” to “fault”. Record the results on Data Sheet.

4.6.2.2 Remove “Wat_5-Cell_FPC_Flow” fault, press “Reset” button twice quickly to clear the faults. Monitor “Wat_5-Cell_FPC_Flow”, “rf5CellPermit” and “LaserPermit” status change from “fault” to “OK”. Record the results on Data Sheet.

4.6.3 Wat_FPC_Flow

4.6.3.1 Ask Water Supply expert to simulate “Wat_FPC_Flow” fault, Monitor “Wat_FPC_Flow”, “rfGunPermit” and “LaserPermit” status change from “OK” to “fault”. Record the results on Data Sheet.

4.6.3.2 Remove “Wat_FPC_Flow” fault, press “Reset” button twice quickly to clear the faults. Monitor “Wat_FPC_Flow”, “rfGunPermit” and “LaserPermit” status change from “fault” to “OK”. Record the results on Data Sheet.

4.6.4 Wat_FPC_Temp

4.6.4.1 Ask Water Supply expert to simulate “Wat_FPC_Temp” fault, Monitor “Wat_FPC_Temp”, “rfGunPermit” and “LaserPermit” status change from “OK” to “fault”. Record the results on Data Sheet.

4.6.4.2 Remove “Wat_FPC_Temp” fault, press “Reset” button twice quickly to clear the faults. Monitor “Wat_FPC_Temp”, “rfGunPermit” and “LaserPermit” status change from “fault” to “OK”. Record the results on Data Sheet.

4.7 Instrumentation Tests

An expert from Instrumentation Group shall be present to assist with the following tests:

4.7.1 Cathode_Master_Gun

4.7.1.1 Ask Instrumentation expert to simulate “Cathode_Master_Gun” fault, Monitor “Cathode_Master_Gun”, “rfGunPermit” and “LaserPermit” status change from “OK” to “fault”. Record the results on Data Sheet.

4.7.1.2 Remove “Cathode_Master_Gun” fault, press “Reset” button twice quickly to clear the faults. Monitor “Cathode_Master_Gun”, “rfGunPermit”and “LaserPermit” status change from “fault” to “OK”. Record the results on Data Sheet.

4.7.2 DCCT Beam Loss

4.7.2.1 Ask Instrumentation expert to simulate “DCCT Beam Loss” fault, Monitor “DCCT Beam Loss” and “LaserPermit” status change from “OK” to “fault”. Record the results on Data Sheet.

4.7.2.2 Remove “DCCT Beam Loss” fault, press “Reset” button twice quickly to clear the faults. Monitor “DCCT Beam Loss” and “LaserPermit” status change from “fault” to “OK”. Record the results on Data Sheet.

4.7.3 ICT Heartbeat

4.7.3.1 Ask Instrumentation expert to simulate “ICT Heartbeat” fault, Monitor “ICT Heartbeat” and “LaserPermit” status change from “OK” to “fault”. Record the results on Data Sheet.

4.7.3.2 Remove “ICT Heartbeat” fault, press “Reset” button twice quickly to clear the faults. Monitor “ICT Heartbeat” and “LaserPermit” status change from “fault” to “OK”. Record the results on Data Sheet.

4.7.4 PMT Beam Loss 1

4.7.4.1 Ask Instrumentation expert to simulate “PMT Beam Loss 1” fault, Monitor “PMT Beam Loss 1” and “LaserPermit” status change from “OK” to “fault”. Record the results on Data Sheet.

4.7.4.2 Remove “PMT Beam Loss 1” fault, press “Reset” button twice quickly to clear the faults. Monitor “PMT Beam Loss 1” and “LaserPermit” status change from “fault” to “OK”. Record the results on Data Sheet.

4.7.5 PMT Beam Loss 2

4.7.5.1 Ask Instrumentation expert to simulate “PMT Beam Loss 2” fault, Monitor “PMT Beam Loss 2” and “LaserPermit” status change from “OK” to “fault”. Record the results on Data Sheet.

4.7.5.2 Remove “PMT Beam Loss 2” fault, press “Reset” button twice quickly to clear the faults. Monitor “PMT Beam Loss 2” and “LaserPermit” status change from “fault” to “OK”. Record the results on Data Sheet.

4.7.6 BPM1

4.7.6.1 Ask Instrumentation expert to simulate “BPM1” fault, Monitor “BPM1” and “LaserPermit” status change from “OK” to “fault”. Record the results on Data Sheet

4.7.6.2 Remove “BPM1” fault, press “Reset” button twice quickly to clear the faults. Monitor “BPM1” and “LaserPermit” status change from “fault” to “OK”. Record the results on Data Sheet.

4.7.7 BPM2

4.7.7.1 Ask Instrumentation expert to simulate “BPM2” fault, Monitor “BPM2” and “LaserPermit” status change from “OK” to “fault”. Record the results on Data Sheet.

4.7.7.2 Remove “BPM2” fault, press “Reset” button twice quickly to clear the faults. Monitor “BPM2” and “LaserPermit” status change from “fault” to “OK”. Record the results on Data Sheet.

4.7.8 BPM3

4.7.8.1 Ask Instrumentation expert to simulate “BPM3” fault, Monitor “BPM3” and “LaserPermit” status change from “OK” to “fault”. Record the results on Data Sheet.

4.7.8.2 Remove “BPM3” fault, press “Reset” button twice quickly to clear the faults. Monitor “BPM3” and “LaserPermit” status change from “fault” to “OK”. Record the results on Data Sheet.

4.7.9 BPM4

4.7.9.1 Ask Instrumentation expert to simulate “BPM4” fault, Monitor “BPM4” and “LaserPermit” status change from “OK” to “fault”. Record the results on Data Sheet.

4.7.9.2 Remove “BPM4” fault, press “Reset” button twice quickly to clear the faults. Monitor “BPM3” and “LaserPermit” status change from “fault” to “OK”. Record the results on Data Sheet.

4.7.10 BPM5

4.7.10.1 Ask Instrumentation expert to simulate “BPM5” fault, Monitor “BPM5” and “LaserPermit” status change from “OK” to “fault”. Record the results on Data Sheet.

4.7.10.2 Remove “BPM5” fault, press “Reset” button twice quickly to clear the faults. Monitor “BPM5” and “LaserPermit” status change from “fault” to “OK”. Record the results on Data Sheet.

4.7.11 BPM6

4.7.11.1 Ask Instrumentation expert to simulate “BPM6” fault, Monitor “BPM6” and “LaserPermit” status change from “OK” to “fault”. Record the results on Data Sheet.

4.7.11.2 Remove “BPM6” fault, press “Reset” button twice quickly to clear the faults. Monitor “BPM6” and “LaserPermit” status change from “fault” to “OK”. Record the results on Data Sheet.

4.7.12 BPM7

4.7.12.1 Ask Instrumentation expert to simulate “BPM7” fault, Monitor “BPM7” and “LaserPermit” status change from “OK” to “fault”. Record the results on Data Sheet.

4.7.12.2 Remove “BPM7” fault, press “Reset” button twice quickly to clear the faults. Monitor “BPM7” and “LaserPermit” status change from “fault” to “OK”. Record the results on Data Sheet.

4.7.13 BPM8

4.7.13.1 Ask Instrumentation expert to simulate “BPM8” fault, Monitor “BPM8” and “LaserPermit” status change from “OK” to “fault”. Record the results on Data Sheet.

4.7.13.2 Remove “BPM8” fault, press “Reset” button twice quickly to clear the faults. Monitor “BPM8” and “LaserPermit” status change from “fault” to “OK”. Record the results on Data Sheet.

4.7.14 BPM9

4.7.14.1 Ask Instrumentation expert to simulate “BPM9” fault, Monitor “BPM9” and “LaserPermit” status change from “OK” to “fault”. Record the results on Data Sheet.

4.7.14.2 Remove “BPM9” fault, press “Reset” button twice quickly to clear the faults. Monitor “BPM9” and “LaserPermit” status change from “fault” to “OK”. Record the results on Data Sheet.

4.7.15 BPM10

4.8.15.1 Ask Instrumentation expert to simulate “BPM10” fault, Monitor “BPM10” and ”LaserPermit” status change from “OK” to “fault”. Record the results on Data Sheet.

4.8.15.2 Remove “BPM10” fault, press “Reset” button twice quickly to clear the faults. Monitor “BPM10” and “LaserPermit” status change from “fault” to “OK”. Record the results on Data Sheet.

4.7.16 BPM11

4.7.16.1 Ask Instrumentation expert to simulate “BPM11” fault, Monitor “BPM11” and ”LaserPermit” status change from “OK” to “fault”. Record the results on Data Sheet.

4.7.16.2 Remove “BPM11” fault, press “Reset” button twice quickly to clear the faults. Monitor “BPM11” and “LaserPermit” status change from “fault” to “OK”. Record the results on Data Sheet.

4.7.17 BPM12

4.7.17.1 Ask Instrumentation expert to simulate “BPM12” fault, Monitor “BPM12” and ”LaserPermit” status change from “OK” to “fault”. Record the results on Data Sheet.

4.7.17.2 Remove “BPM12” fault, press “Reset” button twice quickly to clear the faults. Monitor “BPM12” and “LaserPermit” status change from “fault” to “OK”. Record the results on Data Sheet.

4.7.18 BPM13

4.7.18.1 Ask Instrumentation expert to simulate “BPM13” fault, Monitor “BPM13” and ”LaserPermit” status change from “OK” to “fault”. Record the results on Data Sheet.

4.7.18.2 Remove “BPM13” fault, press “Reset” button twice quickly to clear the faults. Monitor “BPM13” and “LaserPermit” status change from “fault” to “OK”. Record the results on Data Sheet.

4.7.19 BPM14

4.7.19.1 Ask Instrumentation expert to simulate “BPM14” fault, Monitor “BPM14” and ”LaserPermit” status change from “OK” to “fault”. Record the results on Data Sheet.

4.7.19.2 Remove “BPM14” fault, press “Reset” button twice quickly to clear the faults. Monitor “BPM14” and “LaserPermit” status change from “fault” to “OK”. Record the results on Data Sheet.

4.7.20 BPM15

4.7.20.1 Ask Instrumentation expert to simulate “BPM15” fault, Monitor “BPM15” and ”LaserPermit” status change from “OK” to “fault”. Record the results on Data Sheet.

4.7.20.2 Remove “BPM15” fault, press “Reset” button twice quickly to clear the faults. Monitor “BPM15” and “LaserPermit” status change from “fault” to “OK”. Record the results on Data Sheet.

4.7.21 BPM16

4.7.21.1 Ask Instrumentation expert to simulate “BPM16” fault, Monitor “BPM16” and ”LaserPermit” status change from “OK” to “fault”. Record the results on Data Sheet.

4.7.21.2 Remove “BPM16” fault, press “Reset” button twice quickly to clear the faults. Monitor “BPM16” and “LaserPermit” status change from “fault” to “OK”. Record the results on Data Sheet.

4.7.22 Ion_Ch_Beam_Loss

4.7.22.1 Ask Instrumentation expert to simulate “Ion_Ch_Beam_Loss” fault, Monitor “Ion_Ch_Beam_Loss” and “LaserPermit” status change from “OK” to “fault”. Record the results on Data Sheet.

4.7.22.2 Remove “Ion_Ch_Beam_Loss” fault, press “Reset” button twice quickly to clear the faults. Monitor “Ion_Ch_Beam_Loss” and “LaserPermit” status change from “fault” to “OK”. Record the results on Data Sheet.

4.7.23 Cathode_Master_Lsr

4.7.23.1 Ask Instrumentation expert to simulate “Cathode_Master_Lsr” fault, Monitor “Cathode_Master_Lsr” and “LaserPermit” status change from “OK” to “fault”. Record the results on Data Sheet.

4.7.23.2 Remove “Cathode_Master_Lsr” fault, press “Reset” button twice quickly to clear the faults. Monitor “Cathode_Master_Lsr” and “LaserPermit” status change from “fault” to “ok”. Record the results on Data Sheet.

4.7.24 ICT Reading

4.7.24.1 Ask Instrumentation expert to simulate “ICT Reading” fault. Set the “ICT Threshold” value greater than the ICT Reading value. Monitor “ICT Reading” and “LaserPermit” status change from “OK” to “fault”. Record the results on Data Sheet.

4.7.24.2 Remove “ICT Reading” fault, press “Reset” button twice quickly to clear the faults. Monitor “ICT Reading” and “LaserPermit” status change from “fault” to “OK”. Record the results on Data Sheet.

4.7.25 Pepper Pot

4.7.25.1 Ask Instrumentation expert to simulate “Pepper Pot” fault. Set the “Pepper Pot Threshold” value greater than the “ICT Reading Value” Value. Monitor “Pepper Pot” and “LaserPermit” status change from “OK” to “fault”. Record the results on Data Sheet.

4.7.25.2 Remove “Pepper Pot” fault and have expert set “Pepper Pot” Threshold to its normal value. Press “Reset” button twice quickly to clear the faults. Monitor “Pepper Pot” and “LaserPermit” status change from “fault” to “OK”. Record the results on Data Sheet.

4.7.26 Profile Monitor

4.7.26.1 Ask Instrumentation expert to simulate “Profile Monitor” fault and set the “Profile Monitor Threshold” value greater than the “ICT Reading Value”. Monitor “Profile Monitor and “LaserPermit” status change from “OK” to “fault”. Record the results on Data Sheet.

4.7.26. 2 Remove “Profile Monitor” fault and have expert set “Profile Monitor” Threshold value to its normal value. Press “Reset” button twice quickly to clear the faults. Monitor “Profile Monitor” and “LaserPermit” status change from “fault” to “OK”. Record the results on Data Sheet.

4.7.27 Halo Scraper

4.7.27.1 Ask Instrumentation expert to simulate “Halo Scraper” fault and set the “Halo Scraper Threshold” value greater than the “ICT Reading Value”. Monitor “Halo Scraper” and “LaserPermit” status change from “OK” to “fault”. Record the results on Data Sheet.

4.7.27.2 Remove “Halo Scraper” fault and have expert set Halo Scraper Threshold value to its normal value. Press “Reset” button twice quickly to clear the faults. Monitor “Halo Scraper” and “LaserPermit” status change from “fault” to “OK”. Record the results on Data Sheet.

4.7.28 Dipole Profile Mon

4.7.28.1 Ask Instrumentation expert to simulate “Dipole Profile Mon” fault and set the “Dipole Profile Mon” Threshold value greater than the “ICT Reading Value”. Monitor “Dipole Profile Mon” and “LaserPermit” status change from “OK” to “fault”. Record the results on Data Sheet.

4.7.28.2 Remove “Dipole Profile Mon” fault and have expert set “Dipole Profile Mon” Threshold value to its normal value. Press “Reset” button twice quickly to clear the faults. Monitor “Dipole Profile Mon” and “LaserPermit” status change from “fault” to “OK”. Record the results on Data Sheet.

4.8 <u>Particle Accelerator Safety System (P.A.S.S.)</u>

An expert from Access Control Group shall be present to assist with the following tests:

4.8.1 P.A.S.S.

4.8.1.1 Ask Access Control expert to simulate “PASS” fault, Monitor “Pass”, “rfGunPermit” and “LaserPermit” status change from “OK” to “fault”. Record the results on Data Sheet.

4.8.1.2 Remove “PASS” fault, press “Reset” button twice quickly to clear the faults. Monitor “PASS”,“rfGunPermit: and “LaserPermit” status change from “fault” to “OK”. Record the results on Data Sheet.

THIS PAGE LEFT BLANK

APPENDEX 1

Test Data Sheet

ERL MPS

Cryogenic Tests Performed By: _____

Date : _____

Vacuum Tests Performed By: _____

Date: _____

RF Tests Performed By: _____

Date: _____

Power Supply Tests Performed By: _____

Date : _____

Water System Tests Performed By: _____

Date : _____

Instrumentation Tests Performed By: _____

Date : _____

Access Control Tests Performed By: _____

Date : _____

Reference Paragraph	RESULTS (Initial column)	
	PASS	FAIL*
CRYOGENIC TESTS		
Cryo_5-Cell		
4.2.1.1 "Cryo_5-Cell", "rf5CellPermit" and "LaserPermit" status change from "OK" to "fault".		
4.2.1.2 "Cryo_5-Cell", "rf5CellPermit" and "LaserPermit" status from "Fault" to "OK".		
Cryo_Gun		
4.2.2.1 "Cryo_Gun", "rfGunPermit" and "LaserPermit" status from "OK" to "fault".		
4.2.2.2 "Cryo_Gun", "rfGunPermit" and "LaserPermit" status from "Fault" to "OK".		
VACUUM TESTS		
Vac_5-Cell_Beam		
4.3.1.1 "Vac_5-Cell_Beam", "rf5CellPermit" and "LaserPermit" status from "OK" to "fault".		
4.3.1.2 "Vac_5-Cell_Beam", "rf5CellPermit" and "LaserPermit" status from "fault" to "OK".		
Vac_Gun_FPC_Beam		
4.3.2.1 "Vac_Gun_FPC_Beam", "rfGunPermit" and "LaserPermit" status change from "OK" to "fault".		
4.3.2.2 "Vac_Gun_FPC_Beam", "rfGunPermit" and "LaserPermit" status change from "Fault" to "OK".		
Vac_Gun_Cryostat		
4.3.3.1 "Vac_Gun_Cryostat" and "LaserPermit" status change from "OK" to "fault".		
4.3.3.2 "Vac_Gun_Cryostat" and "LaserPermit" change from "Fault" to "OK".		
Vac_Valve_Gun_to_FC		
4.3.4.1 "Vac_Valve_Gun_to_FC" "and LaserPermit" status change from "OK" to "fault".		
4.3.4.2 Vac_Valve_Gun_to_FC"_",and "LaserPermit" status change from "fault" to "OK".		
Vac_Valve_Gun_to_Dump		
4.3.5.1 "Vac_Valve_Gun_to_Dump" and LaserPermit" status change from "OK" to "fault".		

Reference Paragraph	RESULTS (Initial column)	
	PASS	FAIL*
4.3.5.2 Vac_Valve_Gun_to_Dump" and LaserPermit" status change from "fault" to "OK".		
Vac_Valve_Loop		
4.3.6.1 "Vac_Valve_Loop" and "LaserPermit" status change "OK" to "fault".		
4.3.6.2 " Vac_Valve_Loop"_"and "LaserPermit" status change "fault" to "OK".		
Vac_5-Cell Cryostat		
4.3.7.1 "Vac_5-Cell Cryostat" ,"rf5CellPermit" _and "LaserPermit" change from "OK" to "fault".		
4.3.7.2 "Vac_5-Cell Cryostat" ,"rf5CellPermit" _and "LaserPermit" status change from "fault" to "OK".		
RF TESTS		
RF_50KW_Circ_Arc		
4.4.1.1 "RF_50KW_Circ_Arc", "rf5CellPermit" and "LaserPermit" change from "OK" to "fault".		
4.4.1.2 "RF_50KW_Circ_Arc", "rf5CellPermit" and "LaserPermit" change from "fault" to "OK".		
RF_5-Cell_AS_ARC		
4.4.2.1 "RF_5-Cell_AS_ARC", "rf5CellPermit" and "LaserPermit" change from "OK" to "fault".		
4.4.2.2 "RF_5-Cell_AS_ARC", "rf5CellPermit" and "LaserPermit" change from "fault" to "OK".		
RF_5-Cell_VS_ARC		
4.4.3.1 "RF_5-Cell_VS_ARC", "rf5CellPermit" and "LaserPermit" change from "OK" to "fault".		
4.4.3.2 "RF_5-Cell_VS_ARC", "rf5CellPermit" and "LaserPermit" change from "fault" to "OK".		
RF_Kly_Wndw_ARC		
4.4.4.1 " RF_Kly_Wndw_Arc", "rfGunPermit" and "LaserPermit" change from "OK" to "fault".		
4.4.4.2 "RF_Kly_Wndw_Arc", "rfGunPermit" and "LaserPermit" change from "fault" to "OK".		
RF_Kly_Circ_Arc		
4.4.5.1 "RF_Kly_Circ_Arc", "rfGunPermit" and "LaserPermit" change from "OK" to "fault".		

Reference Paragraph	RESULTS (Initial column)	
	PASS	FAIL*
4.4.5.2 "RF_Kly_Circ_Arc", "rfGunPermit" and "LaserPermit" change from "fault" to "OK".		
RF_Gun_FPC1_VS_Arc		
4.4.6.1 "RF_Gun_FPC1_VS_Arc", "rfGunPermit" and "LaserPermit" change from "OK" to "fault".		
4.4.6.2 "RF_Gun_FPC1_VS_Arc", "rfGunPermit" and "LaserPermit" change from "fault" to "OK".		
RF_Gun_FPC1_AS_Arc		
4.4.7.1 "RF_Gun_FPC1_AS_Arc", "rfGunPermit" and "LaserPermit" change from "OK" to "fault".		
4..4.7.2 "RF_Gun_FPC1_AS_Arc", "rfGunPermit" and "LaserPermit" change from "fault" to "OK".		
RF_Gun_FPC2_VS_Arc		
4.4.8.1 "RF_Gun_FPC2_VS_Arc", "rfGunPermit" and "LaserPermit" change from "OK" to "fault".		
4.4.8.2 "RF_Gun_FPC2_VS_Arc", "rfGunPermit" and "LaserPermit" change from "fault" to "OK".		
RF_Gun_FPC2_AS_Arc		
4.4.9.1 "RF_Gun_FPC2_AS_Arc", "rfGunPermit" and "LaserPermit" change from "OK" to "fault".		
4.4.9.2 "RF_Gun_FPC2_AS_Arc", "rfGunPermit" and "LaserPermit" change from "fault" to "OK".		
RF_50KW_Amp		
4.4.10.1 "RF_50kW_Amp" and "LaserPermit" status change from "OK" to "fault".		
4.4.10.2 "RF_50kW_Amp" and "LaserPermit" status change "fault" to "OK".		
RF_Klystron		
4.4.11.1 "RF_Klystron" and "LaserPermit" status change "OK" to "fault".		
4.4.11.2 "RF_Klystron" and "LaserPermit" status change "fault" to "OK".		
LLRF Ready		
4.4.12.1 "LLRF Ready" and "LaserPermit" status change "OK" to "fault".		

Reference Paragraph	RESULTS (Initial column)	
	PASS	FAIL*
4.4.12.2 "LLRF Ready" and "LaserPermit" status change "fault" to "OK".		
LLRF Field Stable		
4.4.13.1 "LLRF Field Stable" and "LaserPermit" status change "OK" to "fault".		
4.4.13.2 "LLRF Field Stable" and "LaserPermit" status change "fault" to "OK".		
POWER SUPPLY TESTS		
HTS_Solenoid_Main		
4.5.1 "HTS_Solenoid_Main" and "LaserPermit" status change "OK" to "fault".		
4.5.2 "HTS_Solenoid_Main" and "LaserPermit" status change "fault" to "OK".		
WATER SYSTEM TESTS		
Water_Main		
4.6.1.1 "Water_Main","rf5CellPermit"and "LaserPermit" change from "OK" to "fault".		
4.6.1.2 "Water_Main,"rf5CellPermit"and "LaserPermit" change from "fault" to "OK".		
Wat_5-Cell_FPC_Flow		
4.6.2.1 "Wat_5-Cell_FPC_Flow"," "rf5CellPermit" and "LaserPermit" change from "OK" to "fault".		
4.6.2.2 "Water 5-Cell_FPC_Flow"," "rf5CellPermit" and "LaserPermit" change from "fault" to "OK".		
Wat_FPC_Flow		
4.6.3.1 "Wat_FPC_Flow","rfGunPermit" and "LaserPermit" change from "OK" to "fault".		
4.6.3.2 "Wat_FPC_Flow"," rf5GunPermit" and "LaserPermit" change from "fault" to "OK".		
Wat_FPC_Temp		
4.6.4.1 "Wat_FPC_Temp","rfGunPermit" and "LaserPermit" change from "OK" to "fault".		
4.6.4.2 "Wat_FPC_Temp","rfGunPermit" and "LaserPermit" change from "fault" to "OK".		

Reference Paragraph	RESULTS (Initial column)	
	PASS	FAIL*
INSTRUMENTATION TESTS		
Cathode_Master_Gun		
4.7.1.1 “Cathode_Master_Gun”,”rfGunPermit” and “LaserPermit” change from “OK” to “fault”.		
4.7.1.2 “Cathode_Master_Gun”,”rfGunPermit” and “LaserPermit” change from “fault” to “OK”.		
DCCT Beam Loss		
4.7.2.1 “DCCT Beam Loss” and “LaserPermit” status change from “OK” to “fault”.		
4.7.2.2 “DCCT Beam Loss” and “LaserPermit” status change from “fault” to “OK”.		
ICT heartbeat		
4.7.3.1 “ICT Heartbeat” and “LaserPermit” status change from OK” to “fault”.		
4.7.3.2 “ICT Heartbeat” and “LaserPermit” status change from “fault” to “OK”.		
PMT Beam Loss 1		
4.7.4.1 “PMT Beam Loss 1” and “LaserPermit” status change from “OK” to “fault”.		
4.7.4.2 “PMT Beam Loss 1” and “LaserPermit” status change from “fault” to “OK”.		
PMT Beam Loss 2		
4.7.5.1 “PMT Beam Loss2” and “LaserPermit” status change from “OK” to “fault”.		
4.7.5.2 “PMT Beam Loss2” and “LaserPermit” status change from “fault” to “OK”.		
BPM1		
4.7.6.1 “BPM1” and “LaserPermit” status change from ”OK” to “fault”.		
4.7.6.2 “BPM1” and “LaserPermit” status change from “fault” to “OK”.		
BPM2		
4.7.7.1 “BPM2” and “LaserPermit” status change from “OK” to “fault”.		
4.7.7.2 “BPM2” and “LaserPermit” status change from “fault” to “OK”.		
BPM3		
4.7.8.1 “BPM3” and “LaserPermit” status change from “OK” to “fault”.		

Reference Paragraph	RESULTS (Initial column)	
	PASS	FAIL*
4.7.8.2 "BPM3" and "LaserPermit" status change from "fault" to "OK".		
BPM4		
4.7.9.1 "BPM4" and "LaserPermit" status change from "OK" to "fault".		
4.7.9.2 "BPM4" and "LaserPermit" status change from "fault" to "OK".		
BPM5		
4.7.10.1 "BPM5" and "LaserPermit" status change from "OK" to "fault".		
4.7.10.2 "BPM5" and "LaserPermit" status change from "fault" to "OK".		
BPM6		
4.7.11.1 "BPM6" and "LaserPermit" status change from "OK" to "fault".		
4.7.11.2 "BPM6" and "LaserPermit" status change from "fault" to "OK".		
BPM7		
4.7.12.1 "BPM7" and "LaserPermit" status change from "OK" to "fault".		
4.7.12.2 "BPM7" and "LaserPermit" status change from "fault" to "OK".		
BPM8		
4.7.13.1 "BPM8" and "LaserPermit" status change from "OK" to "fault".		
4.7.13.2 "BPM8" and "LaserPermit" status change from "fault" to "OK".		
BPM9		
4.7.14.1 "BPM9" and "LaserPermit" status change from "OK" to "fault".		
4.7.14.2 "BPM9" and "LaserPermit" status change from "fault" to "OK".		
BPM10		
4.7.15.1 "BPM10" and "LaserPermit" status change from "OK" to "fault".		
4.7.15.2 "BPM10" and "LaserPermit" status change from "fault" to "OK".		
BPM11		
4.7.16.1 "BPM11" and "LaserPermit" status change from "OK" to "fault".		
4.7.16.2 "BPM11" and "LaserPermit" status change from "fault" to "OK".		

Reference Paragraph	RESULTS (Initial column)	
	PASS	FAIL*
BPM12		
4.7.17.1 "BPM12" and "LaserPermit" status change from "OK" to "fault".		
4.7.17.2 "BPM12" and "LaserPermit" status change from "fault" to "OK".		
BPM13		
4.7.18.1 "BPM13" and "LaserPermit" status change from "OK" to "fault".		
4.7.18.2 "BPM13" and "LaserPermit" status change from "fault" to "OK".		
BPM14		
4.7.19.1 "BPM14" and "LaserPermit" status change from "OK" to "fault".		
4.7.19.2 "BPM14" and "LaserPermit" status change from "fault" to "OK".		
BPM15		
4.7.20.1 "BPM15" and "LaserPermit" status change from "OK" to "fault".		
4.7.20.2 "BPM15" and "LaserPermit" status change from "fault" to "OK".		
BPM16		
4.7.21.1 "BPM16" and "LaserPermit" status change from "OK" to "fault".		
4.7.21.2 "BPM16" and "LaserPermit" status change from "fault" to "OK".		
Ion_Ch_Beam_Loss		
4.7.22.1 "Ion_Ch_Beam_Loss" and "LaserPermit" status change from "OK" to "fault".		
4.7.22.2 "Ion_Ch_Beam_Loss" and "LaserPermit" status change from "fault" to "OK".		
Cathode_Master_Lsr		
4.7.23.1 "Cathode_Master_Lsr" and "LaserPermit" status change from "OK" to "fault".		
4.7.23.2 "Cathode_Master_Lsr" and "LaserPermit" status change from "fault" to "OK".		
ICT Reading		
4.7.24.1 "ICT Reading" and "LaserPermit" status change from "OK" to "fault".		

Reference Paragraph	RESULTS (Initial column)	
	PASS	FAIL*
4.7.24.2 "ICT Reading" and "LaserPermit" status change from "fault" to "OK".		
Pepper Pot		
4.7.25.1 "Pepper Pot" and "LaserPermit" status change from "OK" to "fault".		
4.7.25.2 "Pepper Pot" and "LaserPermit" status change from "fault" to "OK".		
Profile Monitor		
4.7.26.1 "Profile Monitor" and "LaserPermit" status change from "OK" to "fault".		
4.7.26.2 "Profile Monitor" and "LaserPermit" status change from "fault" to "OK".		
Halo Scraper		
4.7.27.1 "Halo Scraper" and "LaserPermit" status change from "OK" to "fault".		
4.7.27.2 "Halo Scraper" and "LaserPermit" status change from "fault" to "OK".		
Dipole_Profile_Mon		
4.7.28.1 "Dipole_Profile_Mon" and "LaserPermit" status change from "OK" to "fault".		
4.7.28.2 "Dipole_Profile_Mon" and "LaserPermit" status change from "fault" to "OK".		
Particle Accelerator Safety System (P.A.S.S.)		
4.8.1.1 "PASS","rfGunPermit"and "LaserPermit" change from "OK" to "fault".		
4.8.1.2 "PASS","rfGunPermit" and "LaserPermit" change from "fault" to "OK"		

*Description and Action taken for FAILED Tests:

Approved ERL Project Leader: _____

Date: _____

THIS PAGE LEFT BLANK

Table 1 Signals I/O listing

System Name	Module	Channel	Slot
Inputs			
For Gun Permit			
Water Main	NI 9425	DI0	1
Pass	NI 9425	DI1	1
Vacuum Beam Gun FPC & Beam (Vac_Gun_FPC_Beam)	NI 9425	DI6	1
Cryo Gun	NI 9425	DI7	1
Water FPC Flow (Wat_FPC_Flow)	NI 9425	DI8	1
Cathode Home Gun	NI 9425	DI9	1
Cathode Clamps Gun	NI 9425	DI10	1
RF Gn FPC1 VacSide ArcDet (RF Gun FPC1 VS Arc)	NI 9401 (B)	DIO0	4
RF Gn FPC1 AirSide ArcDet (RF Gun FPC1 AS Arc)	NI 9401 (B)	DIO1	4
RF Gn FPC2 VacSide ArcDet (RF Gun FPC2 VS Arc)	NI 9401 (B)	DIO2	4
RF Gn FPC2 AirSide ArcDet (RF Gun FPC2 AS Arc)	NI 9401 (B)	DIO3	4
RF Klystron Window ArcDet (RF Kly Wndw Arc)	NI 9401 (B)	DIO4	4
RF Klystron Circulation ArcDet (RF Kly Circ Arc)	NI 9401 (B)	DIO5	4
Water FPC Temperature	NI 9401 (B)	DIO6	4
For 5-Cell Permit			
Water Main	NI 9425	DI0	1
Pass	NI 9425	DI1	1
Cryo_5_Cell	NI 9425	DI2	1
Vacuum 5-Cell Beam (Vac_5-Cell_Beam)	NI 9425	DI3	1
Vacuum 5-Cell Cryostat	NI 9425	DI4	1
Water 5-Cell FPC Flow	NI 9425	DI5	1
RF 50kW Circulation ArcDet (RF_50W_Circ_Arc)	NI 9401 (A)	DIO0	2

System Name	Module	Channel	Slot
RF 5-Cell cavity AirSide ArcDet (RF_5-Cell_AS_Arc)	NI 9401 (A)	DIO1	2
RF 5-Cell cavity VacSide ArcDet (RF_5-Cell_VS_Arc)	NI 9401 (A)	DIO2	2
For Laser			
Vacuun Gun Crystat (Vac Gun Crystat)	NI 9425	DI11	1
Vacuum Valve Gun to Faraday Cup (Vac Valve Gun to FC)	NI 9425	DI12	1
Vacuum Valve Gun to Dump (Vac Valve Gun to Dump)	NI 9425	DI13	1
Vacuun Valve Open Loop (Vac Valve Loop)	NI 9425	DI14	1
Cath_Home_Laser (Cathode Homer_Lsr)	NI 9425	DI15	1
Cath_Clamp_Laser (Cathode Clamps_Lsr)	NI 9425	DI16	1
HALO SCRAPERS	NI 9425	DI17	1
ICT_Heartbeat (Integrating Current Transformer)	NI 9425	DI18	1
PPEPPER POT	NI 9425	DI19	1
PROFILE MONITOR	NI 9425	DI20	1
Dipole_Profile_Mon	NI 9425	DI21	1
Spare	NI 9425	DI22	1
Spare	NI 9425	DI23	1
Spare	NI 9425	DI24	1
Spare	NI 9425	DI25	1
Spare	NI 9425	DI26	1
Spare	NI 9425	DI27	1
Spare	NI 9425	DI28	1
Spare	NI 9425	DI29	1
Spare	NI 9425	DI30	1
Spare	NI 9425	DI31	1
RF 50KW Amp	NI 9401 (C)	DIO0	7
RF Klystron	NI 9401 (C)	DIO1	7
HTS Solenoid Main	NI 9401 (C)	DIO2	7

System Name	Module	Channel	Slot
HTS Solenoid Aux (Spare)	NI 9401 (C)	DIO3	7
LLRF Ready	NI 9401 (C)	DIO4	7
LLRF Field Stable	NI 9401 (C)	DIO5	7
PMT Beam Loss 1	NI 9401 (C)	DIO6	7
PMT Beam Loss 2	NI 9401 (C)	DIO7	7
BPM1	NI 9401 (D)	DIO0	5
BPM2	NI 9401 (D)	DIO1	5
BPM3	NI 9401 (D)	DIO2	5
BPM4	NI 9401 (D)	DIO3	5
BPM5	NI 9401 (D)	DIO4	5
BPM6	NI 9401 (D)	DIO5	5
BPM7	NI 9401 (D)	DIO6	5
BPM8	NI 9401 (D)	DIO7	5
BPM9	NI 9401 (E)	DIO0	6
BPM10	NI 9401 (E)	DIO1	6
BPM11	NI 9401 (E)	DIO2	6
BPM12	NI 9401 (E)	DIO3	6
BPM13	NI 9401 (E)	DIO4	6
BPM14	NI 9401 (E)	DIO5	6
BPM15	NI 9401 (E)	DIO6	6
BPM16	NI 9401 (E)	DIO7	6
Ion_Ch_Beam_Loss	NI 9401 (8)	DIO7	4
DCCT Beam Loss	NI 9401 (A)	DIO3	2
ICT Reading (Integrating Current Transformer)	NI9223	Chan 1	3
Outputs			
Sytem Name	**Module**	**Channel**	**Slot**
SRF Gun Permit(High Level)	NI 9401 (A)	DIO7	2
5-Cell Gun Permit (High Level)	NI 9401 (A)	DIO6	2
Laser Permit (High Level)	NI 9401 (A)	DIO 5	2

If you are using a printed copy of this procedure, and not the on-screen version, then you MUST make sure the dates at the bottom of the printed copy and the on-screen version match. The on-screen version of the Collider-Accelerator Department Procedure is the Official Version. Hard copies of all signed, official, C-A Operating Procedures are available by contacting the ESSHQ Procedures Coordinator, Bldg. 911A

C-A OPERATIONS PROCEDURES MANUAL

18.10.1 VTF Chipmunk Response Procedure

Text Pages 2 through 5

Hand Processed Changes

HPC No.	Date	Page Nos.	Initials
_____	_____	_____	_____
_____	_____	_____	_____
_____	_____	_____	_____

Approved: _____***Signature w/Date on File***_____
Collider-Accelerator Department Chairman Date

L. Hammons

1. Purpose

1.1 The purpose of this procedure is to provide operators of the VTF facility with instructions on responding to chipmunks that can disable or interlock RF operation in the Vertical Test Facility (VTF).

1.2 Acronyms and Definitions:

1.2.1 ACS – Access Controls System

1.2.2 Chipmunk – Device used to monitor radiation levels, in millirem/hour.

1.2.3 Chipmunk Interlock – An event in which the critical devices are disabled triggered by a chipmunk which exceeds a preset dose rate.

1.2.4 Critical Device – A device that controls or prevents the generation of hazardous radiation levels in a given area. For the VTF this includes, but is not necessarily limited to the RF system.

1.2.5 Dose Rate – Magnitude of radiation field, normally reported in millirem/hour.

1.2.6 FAIL SAFE – Indication of problem with a chipmunk. The problem will cause the ACS to go into SAFE mode.

1.2.7 Interlock Level – The preset dose rate registered by a chipmunk that will cause the chipmunk to interlock the critical devices.

1.2.8 RAD TRIP – Indication that a chipmunk has registered a dose rate that exceeds its interlock level. The condition will cause the critical devices to be disabled by the ACS.

1.2.9 RSC – Radiation Safety Committee

1.2.10 RS LOTO – Radiation Safety Lockout/Tagout, performed by an authorized person that protects a given area from radiation by disabling a critical device.

2. Responsibilities

2.1 Operators of the VTF are responsible for investigating interlocks that occur at the facility.

2.2 The RSC Chair may authorize temporary written exceptions to this procedure, which the Chair shall review within two working days with the ESSHQ Division Head.

3. Prerequisites

3.1 The ACS shall be certified for all areas not otherwise locked out by RS LOTO.

3.2 Qualified and trained VTF operators.

4. Precautions

None

5. Procedures

Note 1:

1. VTF chipmunks include the following:

Name	Device	Location
NM179	NMON179.erl	Center of moving roof
NM180	NMON180.erl	Northeast corner of VTF

Note 2:

Chipmunks levels can be monitored using the *ChipmunkViewer* application.

Note 3:

Chipmunks interlocks are shown as a 'RAD TRIP' on the PASS HMI display below the stairs at the VTF..

Note 4:

A chipmunk interlock will turn off the critical devices including the RF power to the device under test.

5.1 IF a chipmunk interlock occurs, perform the following:

5.1.1 IF operating the RF in CW mode:

5.1.1.1 Reduce the RF power to the device under test.

5.1.1.2 Reset the interlock condition by pressing the RAD TRIP RESET button on the VTF Access Control Box mounted beneath the stairs of the VTF facility.

5.1.1.3 Resume operation.

5.1.1.3.1 IF repeated interlocks occur, continue to perform step 5.1.1.1 until no further interlocks occur.

5.1.2 IF operating the RF in pulsed mode:

5.1.2.1 Reduce the RF power and/or the duty cycle to the device under test.

5.1.2.2 Reset the interlock condition by pressing the RAD TRIP RESET button on the VTF Access Control Box mounted beneath the stairs of the VTF facility.

5.1.2.3 Resume operation.

5.1.2.3.1 If repeated interlocks occur, continue to perform step 5.1.2.1 until no further interlocks occur.

5.2 Problems associated with the chipmunk system:

Note:
A 'FAIL SAFE' condition of either chipmunk in the VTF facility will cause the access control system to go the SAFE mode. Both 'FAIL SAFE' and 'RAD TRIP' will be indicated on the HMI display on the
VTF Access Control Box.

5.2.1 IF a 'FAIL SAFE' indication is displayed on the HMI panel:

5.2.1.1 Attempt a hardware reset using the H/W RESET button on the VTF Access Control Box mounted beneath the stairs of the VTF facility.

5.2.1.1.1 IF the reset is successful, the 'FAIL SAFE indication will change to 'OK'.

5.2.1.1.2 To restore operation of the facility, change the access mode from SAFE to the desired mode as per the instructions given in C-A OPM 18.10.2, "Operation of VTF (Vertical Test Facility) ACS (Access Control System).

5.2.1.1.3 IF the reset does not clear the 'FAIL SAFE' indication, call the Access Control group for assistance.

6. Documentation

None

7. References

7.1 C-A OPM 18.10.2, "Operation of VTF (Vertical Test Facility) ACS (Access Control System)".

8. Attachments

None

If you are using a printed copy of this procedure, and not the on-screen version, then you MUST make sure the dates at the bottom of the printed copy and the on-screen version match.
The on-screen version of the Collider-Accelerator Department Procedure is the Official Version.
Hard copies of all signed, official, C-A Operating Procedures are available by contacting the ESSHQ Procedures Coordinator, Bldg. 911A

C-A OPERATIONS PROCEDURES MANUAL

18.10.2 VTF Roof Operation

Hand Processed Changes

HPC No.	Date	Page Nos.	Initials

Approved: _____***Signature With Date on File***_____
Collider-Accelerator Department Chairman Date

R. Porqueddu

18.10.2 VTF Roof Operation

1. Purpose

This procedure describes the process for operating the "Rolling Roof" or moveable shielding roof which covers the vertical test facility in building 912. The Rolling Roof has a mass of approximately 65 Tons located on top of a block house at a height of 15 feet, operated remotely from a control box on the ground. Moving this much mass, overhead, by a powered means has inherent safety concerns which dictate the action of operating be well detailed in this report.

2. Responsibilities

The only users who should be operating this equipment are the Project Engineers overseeing the operation of the VTF, Building Managers and the Principal investigators who may be running experiments in the facility. Under no circumstances should the roof be operated unless there is an absolute need to do so. Use of this facilities feature should follow the ALARA principle – its operation should take place As Low As Reasonable Allowable (or possible). For instance, tests to the Access Controls have been designed so that roof movement can be simulated and actual Roof movement is not required. The roof "machine guard" interlock is to be tested as part of normal operation as well.

3. Prerequisites

Along with all other area specific training required to access the facility, this roof shall only be operated in conjunction with the sweep procedures for the experimental area the roof covers as outlined in TPL 12-11.

This facility has been designed and erected as per CA6010047 which is a category A1 drawing. No modifications or alterations are permitted to this facility as it would impact these drawings or all activities may not proceed.

4. Precautions

Moving a 65 Ton (130,000 lbs) roof, elevated 15 feet overhead by remote control while standing below and alongside of it has inherent safety concerns. There are safeguards preventing the roof from crashing into the end stops, and even if it does the roof track system is designed to absorb the loads and prevent it from being driven off.

The roof and its associated shielding is documented and QA-1 rated. Modifying or re-arranging the shielding in any other way then moving the roof into position is prohibited.

5. Procedure

5.1 In order to close the roof (Move the roof over the Vertical Test Dewar) either partially, or completely, perform the following operations.

5.1.1 Before beginning it is necessary to be sure that the 480 Volt motor power is switched on. If it is the power indicator in the upper left hand corner will be illuminated. If it is not have it switched on.

5.1.2 Inspect both roof tracks for debris or obstruction. All tools and any loose items must be cleaned from the top of the blocks as well.

5.1.3 Inspect the Roof Cable, make sure it is in good order, nothing is resting on it or it is touching the shielding and is sufficiently taught.

5.1.4 Ensure there are no equipment / experiments which are above the top level of the blocks. Check by eye.

5.1.5 If a sweep is also being performed those tasks should be performed at this time as per TPL 12-11, "Securing Vertical Test Facility (VTF) for Experimental Tests, Sweep Procedure."

5.1.6 Exit to the top of the platform, pull up stairs and insert lock.

5.1.7 Walk down the stairs and exit the VTF. Perform any other operations required if sweeping the facility at this point.

5.1.8 At the Control box observe the "Motor Power" selector is in the "Disabled" position and the red indicator light associated with it is off. Turn it on at this time and observe the lamp to illuminate.

5.1.9 Insert the interlock key in the "Key SW" location and move it from "Disabled" to "Enabled".

5.1.10 Observe the following indicator lights are in the current status.

5.1.10.1 "AC OL Falt" Amber indicator light is off (This is roof motor over load).

5.1.10.2 "Stairs Down" Amber indicator light is off (This assures the stairs are out of the way).

5.1.10.3 "Key SW Enabled" Amber indicator light is on (This is the key switch just enabled).

5.1.11 If the Roof has previously been completely opened, observe the “Open” red indicator light is illuminated. Otherwise it will be dark.

5.1.12 Rotate the “Roof Direction SW” to the “Closed Direction” Pushbutton if not already in that position.

5.1.13 Observe the “VTF Roof cam East” for any obstructions.

5.1.13.1 Note that the stairs should be up.

5.1.13.2 No obstructions on the tracks

5.1.13.3 No equipment in the path of the roof.

5.1.14 While observing the Leading Edge of the Roof in the East camera, press and hold the Green “Closed Direction” button and watch the roof close.

5.1.15 At any time the motion of the roof can be halted by lifting your finger off the “Closed Direction” Button.

5.1.16 Continue holding the button until the roof stops itself and pressing the button no longer has any effect. Remove your finger from the button and observe that the “Closed” Green indicator light is illuminated.

5.1.17 Rotate the “Motor Power” switch to the “Disabled” position and the Red light goes out.

5.1.18 Rotate the “Key SW” to the “Disabled” position and remove the key.

The roof is now closed and ready for operations should that be desired.

5.2 In order to open the roof (Move the roof from over the VTD to opposite side of the blockhouse) either partially, or completely, perform the following operations.

5.2.1 Before beginning it is necessary to be sure that the 480 Volt motor power is switched on. If it is the power indicator in the upper left hand corner will be illuminated. If it is not have it switched on.

5.2.2 If the facility was previously swept for operations please refer to TPL 12-11, “Securing Vertical Test Facility (VTF) for Experimental Tests, Sweep Procedure.” for any additional activities at this point.

5.2.3 At the Control box observe the “Motor Power” selector is in the “Disabled” position and the red indicator light associated with it is off. Turn it on at this time and observe the lamp to illuminate.

5.2.4 Insert the interlock key in the “Key SW” location and move it from “Disabled” to “Enabled”.

5.2.5 Observe the following indicator lights are in the current status.

5.2.5.1 “AC OL Falt” Amber indicator light is off (This is roof motor over load).

5.2.5.2 “Stairs Down” Amber indicator light is off (This assures the stairs are out of the way).

5.2.5.3 “Key SW Enabled” Amber indicator light is on (This is the key switch just enabled).

5.2.6 If the Roof has previously been completely closed, observe the “closed” green indicator light is illuminated. Otherwise it will be dark.

5.2.6 Rotate the “Roof Direction SW” to the “Open Direction” Pushbutton if not already in that position.

5.2.7 Observe the “VTF Roof cam East” for any obstructions.

5.2.7.1 Note that the stairs should be up.

5.2.8 Observe the “VTF Roof cam West” for any obstructions.

5.2.8.1 No obstructions on the tracks
5.2.8.2 No equipment in the path of the roof.

5.2.9 While observing the Leading Edge of the Roof in the West camera, press and hold the RED “Open Direction” button and watch the roof open.

5.2.10 At any time the motion of the roof can be halted by lifting your finger off the “Open Direction” Button.

5.2.11 Continue holding the button until the roof stops itself and pressing the button no longer has any effect. Remove your finger from the button and observe that the “Open” Red indicator light is illuminated.

5.2.12 Rotate the “Motor Power” switch to the “Disabled” position and the Red light goes out.

5.2.13 Rotate the “Key SW” to the “Disabled” position and remove the key.

5.3 In order to safely work on the roof motor and mechanism, the roof can be stopped in any given position, but observe the following:

5.3.1 Be sure the 480Volt motor power is switched off. Finding the source of the 480 Volt motor power identified on the switch LOTO the circuit breaker as required.

5.3.2 Rotate the “Key SW” to the “Disabled” position and remove the key.

5.3.3 If the roof must be moved in the closed direction follow the procedures outlined in section 5.1 of this document. After moving the roof follow the procedure in section 5.3.1 of this document.

5.3.5 If the roof must be moved in the open direction follow the procedures outlined in section 5.2 of this document. After moving the roof, follow the procedure in section 5.3.1 of this document.

5.3.6 The roof major components are accessed by using a ladder and climbing up the rear of the blockhouse and can be found under the roof but on top of the aluminum grating / platform.

5.4 Because the roof motor “machine guard” interlock is a key-switch it must be tested and the test logged at least once in every 6 months. The test can be performed by trained operators and they should follow the procedure here to do so. This test will begin with the roof in the “open” position always.

5.4.1 Before beginning it is necessary to be sure that the 480 Volt motor power is switched on. If it is the power indicator in the upper left hand corner will be illuminated. If it is not have it switched on.

5.4.2 Inspect both roof tracks for debris or obstruction. All tools and any loose items must be cleaned from the top of the blocks as well.

5.4.3 Inspect the Roof Cable, make sure it is in good order, nothing is resting on it or it is touching the shielding and is sufficiently taught.

5.4.4 Ensure there are no equipment / experiments which are above the top level of the blocks. Check by eye.

5.4.5 If a sweep is also being performed those tasks should be performed at this time as per TPL 12-11, “Securing Vertical Test Facility (VTF) for Experimental Tests, Sweep Procedure.”

5.4.6 Exit to the top of the platform, pull up stairs and insert lock.

5.4.7 Walk down the stairs and exit the VTF. Perform any other operations required if sweeping the facility at this point.

5.4.8 At the Control box observe the “Motor Power” selector is in the “Disabled” position and the red indicator light associated with it is off.

5.4.9 With interlock key NOT inserted in the “Key SW” Rotate the “Roof Direction SW” to the “Closed Position” if not already in that position.

5.4.10 Observe the “VTF Roof cam East” for any obstructions.

5.4.10.1 Note that the stairs should be up.

5.4.10.2 No obstructions on the tracks

5.4.10.3 No equipment in the path of the roof.

5.4.11 While observing the Leading Edge of the Roof in the East camera, press and hold the Green “Closed Direction” button and verify that the roof does NOT move.

5.4.12 Insert the interlock key in the “Key SW” location and move it from “Disabled” to “Enabled”.

5.4.13 Observe the following indicator lights are in the current status.

5.4.13.1 “AC OL Falt” Amber indicator light is off (This is roof motor over load).

5.4.13.2 “Stairs Down” Amber indicator light is off (This assures the stairs are out of the way).

5.4.13.3 “Key SW Enabled” Amber indicator light is on (This is the key switch just enabled).

5.4.14 Observe the “VTF Roof cam East” for any obstructions.

5.4.14.1 Note that the stairs should be up.

5.4.14.2 No obstructions on the tracks

5.4.14.3 No equipment in the path of the roof.

5.4.15 While observing the Leading Edge of the Roof in the East camera, press and hold the Green “Closed Direction” button and watch the roof close. Let it travel for a foot or two and release the button, the roof will stop.

5.4.16 Rotate the “Key SW” to the “Disabled” position and remove the key.

5.4.17 Rotate the “Roof Direction SW” to the “Open Direction” Pushbutton.

5.4.18 While observing the Leading Edge of the Roof in the West camera, press and hold the RED “Open Direction” button and verify that the roof does NOT move.

5.4.19 At this point the roof motor “machine guard” operation has been properly verified, log the date and test results in the log attached to the control box.

5.4.20 Now the roof should be parked in either the fully closed (see section 5.1) or fully open (see section 5.2) position.

6. Documentation

6.1 D04-E1879 Winch controller Electrical Schematic Diagram

6.2 D04-E1878 VTF Motor Controls Electrical Schematic Diagram

6.3 CA6010047 Vertical Test Facility Roof Sled, Blockhouse and Roof Assembly

7. References

7.1 TPL 12-11 Securing Vertical Test Facility (VTF) for Experimental Tests, Sweep Procedure.

8. Attachments

8.1 Picture 1 – Motor control box

8.2 Picture 2 – Roof cameras, East and West.

Attachment 8.1

Motor control Box

Attachment 8.2

Roof Cameras, East and West.

If you are using a printed copy of this procedure, and not the on-screen version, then you MUST make sure the dates at the bottom of the printed copy and the on-screen version match.
The on-screen version of the Collider-Accelerator Department Procedure is the Official Version.
Hard copies of all signed, official, C-A Operating Procedures are available by contacting the ESSHQ Procedures Coordinator, Bldg. 911A

18.10.3 SRF LVTF and SVTF Safe Operating Limits

Hand Processed Changes

HPC No.	Date	Page Nos.	Initials

Approved: _____***Signature with Date on File***_____
Collider-Accelerator Department Chairman Date

S. Belomestnykh

18.10.3 – SRF LVTF and SVTF Safe Operating Limits

1. Purpose

Responsibility for the safe and reliable operation of the Superconducting Radio Frequency (SRF) Large Vertical Test Facility (LVTF) and Small Vertical Test Facility (SVTF) facility resides with the LVTF/SVTF Operations Coordinator and the Liaison Physicist as per C-A-OPM 18.2.3. The purpose of this procedure is to outline the Safe Operating Limits for LVTF and SVTF.

2. Responsibilities

2.1 The Liaison Physicist has responsibilities for each of the safe operating limits as specified in this procedure.

2.2 The person in charge that approves any emergency actions that depart from the requirements of this procedure must inform the C-AD Department Chair within 2-hours of this decision.

3. Prerequisites

3.1 Radiation Shielding

3.1.1 Before radiation producing operations, the Liaison Physicist or his designate must ensure that all shielding is properly in place and configuration controlled.

3.1.2 The Liaison Physicist or designee (e.g., Access Controls Group Leader) must ensure that during LVTF or SVTF operations the ACS is functional. This means that the portions of the ACS that prevent exposure to radiation or turn off RF when excessive levels of ionizing radiation occur are functional.

3.1.3 The Liaison Physicist or designee (e.g., Access Controls Group Leader) must ensure that during radiation-producing operations, area radiation monitors that are interfaced with the LVTF or SVTF ACS to remove RF when excessive ionizing radiation is sensed, must be within their calibration date.

3.1.4 The Liaison Physicist or designee (e.g., Access Controls Group Leader and Accelerator Components & Instrumentation Group Leader), must ensure that during radiation-producing operations, the locations of area radiation monitors interfaced with the LVTF or SVTF ACS, are configuration controlled.

3.1.5 The Liaison Physicist or designee must ensure completion of RSC, ASSRC and ESRC Check off Lists, if any before allowing radiation-producing operations.

3.1.6 The Liaison Physicist or designee must ensure each experiment, or test at LVTF or SVTF, shall be reviewed by an internal C-AD review of the adequacy of the relief systems to keep the staff safe and to prevent damage to other equipment. All tests shall be accompanied by a P&ID and an overall configuration drawing approved by a cognizant engineer and the Chief Mechanical Engineer. Radiation safety issues must be reviewed by the RSC. The reviews must be completed before the start of the experiment.

3.2 ODH Protection

3.2.1 The Liaison Physicist or designee must ensure that when cryogens are charged in the system, exhaust fan and the ODH portion of the SVTF ACS are operable. The fan must be manually turned on to enter SVTF. Personnel entering SVTF must wear a POM if there are cryogens in the system.

The Liaison Physicist or designee must ensure that when cryogens are charged in the system, the ODH portion of the LVTF ACS is operable. The LVTF has an ODH monitor at the accessible area at the top of the blockhouse. Personnel must check that the oxygen concentration at the top plate is above 18% (nominal) before entering the pit at top of the blockhouse. The oxygen level can be read at the base.

The Liaison Physicist or designee must ensure that the ODH sensors in the VTF portion of the building 912 are operational. This means that when the oxygen concentration in the building falls below 18% (nominal), the ODH system must automatically isolate the LN2 tank.

Authorized Alternative: Upon discovery that either the SVTF exhaust fan is inoperable, or the ODH portion of the LVTF or SVTF ACS is out of service, entry to the affected area may be allowed by the Liaison Physicist, or designee, if each entrant has their own 5-minute escape pack (or wears a self-contained breathing apparatus), and a portable oxygen monitor.

3.2.2 The Liaison Physicist or designee must ensure ODH area classifications comply with the requirements in the BNL SBMS Subject Area, ODH Classification/Controls.

4. Precautions

The hazards in the operations of the LVTF and SVTF include cryogenics hazards, Oxygen Deficiency Hazard, and ionizing radiation hazard.

5. Procedure

5.1 LVTF and SVTF Safe Operating Limits:

5.1.1 Per BNL RGD registration form for the SC RF Test Block House (VTF or Large VTF), the RF power is limited to 500 W CW, and the X-ray energy range is up to 6 MeV.

5.1.2 Per BNL RGD registration form for the SC RF Block House (SVTF), the RF power is limited to 200 W CW, and the X-ray energy range is up to 4 MeV.

6. Documentation

None

7. References

8.1 C-A-OPM 18.2.3 "VTF and SVTF Operations Organization and Administration."
8.2 BNL Radiation-Generating Device (RGD) Registration Form for Vertical SC RF Test Block House (LVTF), Model # Vert SCRF BH-2, Serial # Vert SCRF BH-001.
8.3 BNL Radiation-Generating Device (RGD) Registration Form for SC RF Block House (SVTF), Model # SCRF BH-1, Serial # SCRF BH-001.

8. Attachments

None

Collider-Accelerator Department

BROOKHAVEN NATIONAL LABORATORY

Building 911A
P.O. Box 5000
Upton, NY 11973-5000
Phone 631 344- 5636
Fax 516 344-5676
cirn@bnl.gov

managed by Brookhaven Science Associates
for the U.S. Department of Energy

date: August 30, 2011
to: E. Lessard
subject: BORE type review of ERL and Blockhouse
from: P. Cirnigliaro
Attendees: P. Cirnigliaro, A. Pendzick, D. Phillips, E. Santiago, M. Gaffney, J. Sandberg, R. Travis, P.K. Feng, D. Pate

On August 24, 2011 a BORE type walk through was performed in building 912 at ERL.The following actions were generated:

In the Klystron Room at ERL:

1- Determine the status of the multi-conductor wire in cable tray under the klystron and label its function if it is not to be permanently installed.
2- Confirm that the cables in the cable tray under the klystron are power and signal and they are properly segregated.
3- Confirm that the power rating of the cable tray under the klystron is not exceeded.

In the ERL Control Room/Counting House;

1- All ceiling tiles are to be in place and have no holes or missing sections.
2- Label pipes and valves on RF cooling system.
3- Incorporate into pressure testing data base /label pressure relief valve on RF cooling system.
4- Guard handles on valves on RF cooling system pipes.
5- All circuit breaker boxes are to have schedules indentifying each breaker function including spares.
6- Back of Thales power transmitter requires label indicating that the 480 volts up stream supply is to be turned off/LOTO prior to opening equipment access door.
7-Label RF power meter to indicate what scale (range) is being used.
8- Remove unused electrical box/conduit near control room door.

High Voltage Transformer Area;

1- Determine if the secondary containment under the transformers require Suffolk County Article 12 registration.
2- Label water piping and valves.
3- Across from the HV transformers on the counting house wall, attach electrical conduit and boxes to wall, they are free floating (no support).
4- Across from the HV transformers on the counting house wall electrical box FDS G43 V1HVPS requires that fitting be tightened.

5- Across from the HV transformers on the counting house wall, determine if tie wraps are sufficient and provide proper wire support in vertical cable tray.

Klystron Power Supply Room;

1-Correct trip hazards from conduits on floor.

2-Electrical boxes and have conduit covers open, bolt covers closed.

3- Confirm that electrical boxes are bonded.

4- Confirm that grounding sticks comply with SBMS subject area Electrical Safety, Design Guide.

ERL Block House;

1- Inspect cable trays where they "T", ensure proper cable dividers are in place.

2-Ensure PASS system cables and signal cables are not in the power side of cable trays.

3- Label water pipes and valves.

ERL Condo, Second Floor;

1- Inspect wood inserts on floor for trip hazard, indicate hazard with hazard tape as necessary.

2- Water cooled powers supply should have leak detection.

3- Circuit breaker panels should have no open circuit breaker bays when panel becomes operational.

VTF Block House;

1- Review stairs for OSHA compliance (length of stairs, rise/tread, etc).

2- Review vertical ladder for OSHA compliance.

3- 6 inch cable tray on the outside of the VTF connected to a panel box requires covers to at least 8 feet high.

General Comments;

1- Update Key Plans, FUA, Run Cards.

2- Label floor loading in all areas that are not on a slab.

3- Electrical equipment is to be NRTL inspected.

Cc: Attendees
R. Karol
D. Passarello

INSTRUMENT READINESS REVIEW REPORT
FOR
ENERGY RECOVERY LINAC GUN-TO-DUMP COMMISSIONING

April 3-4, 2014

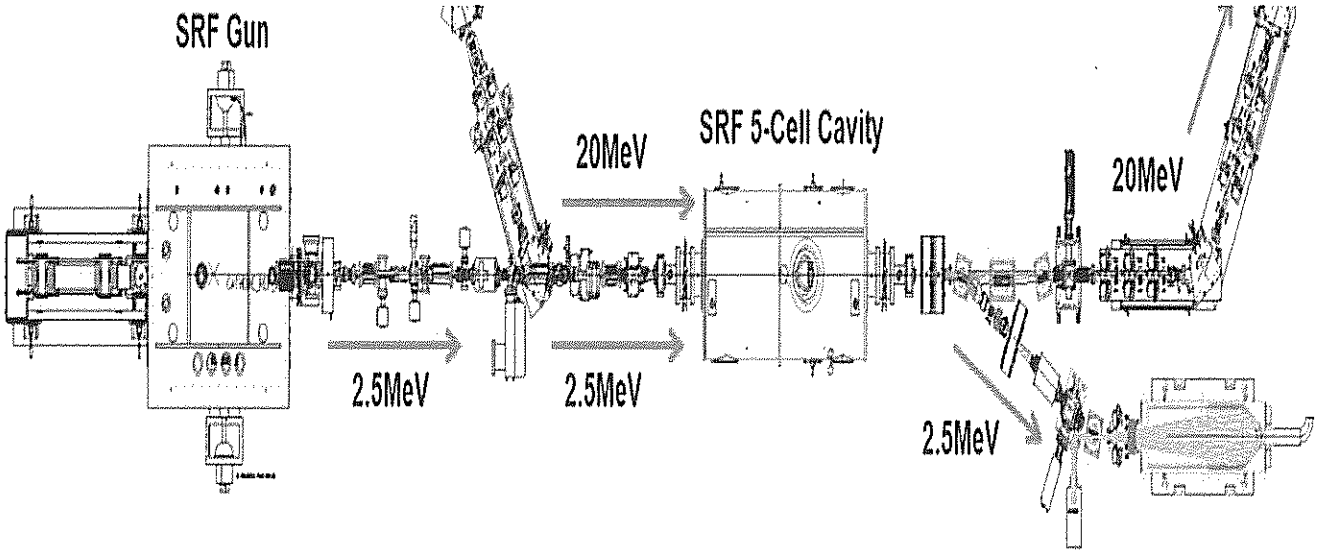

ERL Gun-to-Dump Commissioning IRR Team

LEAD	Chuck Schaefer	4/15/14 DATE
MEMBER	Walt Czekaj	4/15/14 DATE
MEMBER	Asher Etkin	4-15-2014 DATE
MEMBER	Peter Ingrassia	4/15/2014 DATE
MEMBER	Charles Theisen	4/15/2014 DATE

Table of Contents

Executive Summary 1
Results 2
1.0 Safety Assessment Document (SAD), Accelerator Safety Envelope (ASE), and Unreviewed Safety Issue (USI) Process 2
2.0 Alarming and Interlocking Radiation Monitors 4
3.0 Radiation Protection 5
4.0 Conduct of Operations (CONOPS) 6
5.0 Radiation, Laser and ODH Interlocks 8
6.0 Controls System, Cyber Security 9
7.0 Conventional Safety/Environment, Safety and Health (ESH) 12
8.0 Electrical Safety and Lockout/Tagout (LOTO) 13
Summary of Pre-Start and Post-Start Findings 14
Appendix A: Charge Letter 17
Appendix B: ERL IRR Agenda 19

Executive Summary

An Instrument Readiness Review (IRR) has been conducted for the gun-to-dump commissioning of the Energy Recovery Linac (ERL) per the Charge Letter (see Appendix A) from the Collider-Accelerator Department (C-AD) Research and Development Division Head. The objective of the IRR was to provide assurance that gun-to-dump commissioning of the ERL can be conducted in a safe and environmentally sound manner.

The IRR Team consisted of five BNL staff. The site visit portion of the IRR emphasized a performance-based approach with a strong focus on field activities that included walk-downs and inspections of systems and structures, inspections of safety systems, and interviews and roundtable discussions with staff. A comprehensive set of Lines of Inquiry (LOIs) was developed by C-AD and used to guide the review.

For each topical area, pre-start and post-start findings are presented along with recommendations (opportunities for improvements). The IRR Team identified 23 pre-start findings, 7 post-start findings, and several recommendations (opportunities for improvement). Pre-start findings should be resolved prior to the on-site portion of the Accelerator Readiness Review (ARR) activities. Post-start findings may be resolved in a reasonable timeframe after the ARR activities and should be entered and tracked to completion in a corrective action tracking system. Recommendations are offered as representative of best practices and are left to C-AD line management for resolution, as appropriate.

Known open action items that were presented to the IRR Team and that are being tracked in C-AD's Family Assessment Tracking System (ATS) or Radiation Safety Committee (RSC) open action database are not included in this report.

The functional areas of Quality Assurance, Configuration Management, and Contractor Assurance were not evaluated by this IRR due to the unexpected unavailability of the assessor assigned to review them. It is expected that C-AD Management will make arrangements to have these functional areas assessed separately prior to the ARR.

Based on this review, the use of non-plenum rated cables in the ERL Control Room overhead and the proper dressing of cables into and out of instrument racks is believed to be a significant issue that will require a coordinated effort to address.

Overall, it was determined that there are still a modest number of tasks that need to be completed prior to declaring the facility fully ready for the ARR. Several of the pre-start actions should be completed prior to low power testing, however, the team believes that ERL is well on its way to being ready for the ARR later this summer.

Results

1.0 Safety Assessment Document (SAD), Accelerator Safety Envelope (ASE), and Unreviewed Safety Issue (USI) Process

1.1 Observations

Sections of the SAD (August 2011) pertinent to the ERL were reviewed and validated for accuracy and adequacy by interview and tours. The ERL ASE (June 2012) was also reviewed. There are implementing procedures for the ASE requirements, such as Access Controls Testing. Fault studies will be used to verify shield integrity. The Commissioning Sequence calls for a stepped approach to increasing beam current and verifying shield integrity before proceeding with higher currents.

The ERL is housed inside of a shielded enclosure constructed from a combination of standard and high density concrete and steel. Locations of penetrations are described in the SAD. Another USI evaluation is planned to address the changes in the number of penetrations as well as the analysis and solution for the large roof cracks.

The following USI-triggering procedures were verified: C-AD Work Permit (04/2014), OPM 1.10.1, *Procedure for Identifying Unreviewed Safety Issue*, and OPM 13.6.1a, *Design Review Questionnaire*. ERL staff training on the ERL safety basis was examined.

1.2 LOIs

1. Ensure assumptions in the safety analysis are configuration managed	Adequate
2. Validate that shielding statements in the ASE are accurate	Adequate
3. Ensure fault conditions and assumptions are reflected in the SAD and procedures	Adequate
4. Validate that the ASE is up to date, consistent with SBMS requirements, and updates are reflected in procedures and USIs	Adequate after implementation of pre-start finding
5. Verify that specifications used in shielding analyses are valid	Adequate
6. Verify Radiation Safety Committee actions are addressed or being tracked to completion	Adequate
7. Verify ASE credited controls are understood by operators and configuration managed	Adequate
8. Verify that Operators have been trained on the facility safety basis	Adequate after implementation of pre-start finding
9. Check the status of the Commissioning Plan, Commissioning Sequence, and Commissioning Fault Study Plans	Adequate
10. Verify system descriptions in SAD	Adequate
11. Check bulk shielding thicknesses against the drawing specifications	Adequate
12. Verify there are enough Operators and Radiological Control support staff to meet planned commissioning schedule	Adequate

1.3 Pre-Start Findings

1.3.1 Add a citation in the ERL ASE to the version of the SAD that applies.

1.3.2 Train ERL staff in C-AD OPM 2.5.6.1, *ERL High Current Operations*.

1.4 Post-Start Findings

None

1.5 Recommendations

None

2.0 Alarming and Interlocking Radiation Monitors

2.1 Observations

Nine (9) interlocking Chipmunks have been placed in and around the ERL enclosure. The Chipmunks were confirmed to be in calibration with a calibration due date of July 2014. Alarm indications are available to the ERL Operators via the ERL Control Room alarm monitoring system, but there is no document explaining the rationale for the location of the Chipmunks. The RSC Chairman explained why several of these locations were selected.

Several of the Chipmunk Interface Boxes contain a "20 mR/hr" label. This does not agree with the Chipmunk interlock set points and could be a point of confusion.

2.2 LOIs

1. What is the source term that needs to be monitored and at what levels? Is the Chipmunk capable of monitoring this source term? What evidence is there to support this?	Adequate
2. How many Chipmunks are required to support ERL commissioning, and are they calibrated and in place?	Adequate
3. What is the process for determining Chipmunk placement, and is this documented?	Adequate after implementation of pre-start finding
4. Verify how Chipmunks are configuration controlled	Adequate
5. Verify that C-AD has a process for controlling and changing alarm and interlock set points.	Adequate
6. Verify that Chipmunk alarms are displayed in the ERL Control Room.	Adequate
7. Has C-AD validated the Chipmunk dose rate displays in the ERL Control Room?	Adequate

2.3 Pre-Start Findings

2.3.1 Document the rationale for placement of the interlocking monitors.

2.4 Post-Start Findings

2.4.1 Remove the "20 mR/hr" labels from the Chipmunk interface boxes.

2.5 Recommendations

None

3.0 Radiation Protection

3.1 Observations

C-AD has adequate Radiological Control Technician (RCT) staffing to support ERL commissioning, which is planned to occur only on the day shift. Weekend running is not currently planned. Portable instrumentation is adequate to monitor the source term. However, the ERL bulk shield drawing has not been formally approved and placed under configuration control.

An area-monitoring plan and map have been prepared for deployment of thermoluminescent dosimeters (TLDs), but the frequency of changing out TLDs has not yet been determined. Also, the TLDs are not labeled to guard against unintended relocation.

3.2 LOIs

1. Portable instrument performance data has been reviewed to ensure the instruments are capable of accurately measuring the pulsed fields	Adequate
2. An appropriate number of trained and qualified RCTs are available to support commissioning	Adequate
3. An area monitoring plan using passive TLDs exists	Adequate after implementation of pre-start findings
4. As-built ERL enclosure bulk shielding is verified to match the dimensions prescribed on engineering drawings, and the shield design drawings are current, approved and under configuration control.	Adequate after implementation of pre-start findings

3.3 Pre-Start Findings

3.3.1 Document the frequency of change out (e.g., monthly, etc.) of the area monitoring TLDs as a part of the passive area monitoring plan and label them to prevent unauthorized movement.

3.3.2 Formally approve the ERL bulk shield drawing and make modifications based upon the Engineering Change Notice (ECN) to address the large roof crack issue.

3.4 Post-Start Findings

None

3.5 Recommendations

3.5.1 The Klystron has been treated as a Radiation Generating Device (RGD) for several years during stand-alone testing. Now that ERL is preparing for commissioning, consider removing the Klystron from the RGD Program, as it is part of the ERL accelerator.

4.0 Conduct of Operations (CONOPS)

4.1 Observations

The ERL has a knowledgeable Operations Coordinator who has created a conduct of operations plan for the facility. The plan relies heavily on C-AD's established CONOPS Program. ERL-specific procedures have been developed and approved (e.g., LOTO, search and secure the ERL enclosure, ALARA strategies for tuning the beam, etc.). A CONOPS Matrix has been prepared but it could not be determined whether it has been approved. Because of the reliance on C-AD's CONOPS program, the ERL CONOPS program is deemed to be adequate, although the CONOPS culture is recognized to be in its infancy. ERL will monitor and respond to system alarms. The C-AD Main Control Room will also receive many of these alarms but will not be expected to respond.

Individuals interviewed were knowledgeable of procedures on which they had received training, but some procedure and training gaps were identified. Job Training Assessments (JTAs) have been created for each position on the ERL organization chart. R2A2s exist but do not appear to be current. Operations/commissioning organization and an operations training program have been established.

4.2 LOIs

1. Verify that a Commissioning Plan has been prepared	Adequate
2. Verify that technical and operations procedures that support commissioning have been prepared and approved	Adequate
3. Verify that procedures have been validated	Adequate
4. Verify Local Emergency Coordinator effectiveness for Incident Command from the ERL Control Room	Adequate after implementation of pre-start findings
5. Verify a CONOPS Matrix has been prepared and approved	Adequate after implementation of pre-start findings
6. Verify that an operations/commissioning organization has been established consistent with the C-AD organization	Adequate
7. Verify that implementing procedures cited in the Matrix have been prepared and approved	Adequate
8. Verify Operators have been trained on procedures	Adequate after implementation of pre-start findings
9. Verify that an ERL operations and qualification program has been established	Adequate
10. Verify JTAs for all positions have been prepared	Adequate after implementation of pre-start findings
11. Verify that a Control Room staffing plan has been established	Adequate
12. Verify R2A2s for commissioners	Adequate

4.3 Pre-Start Findings

4.3.1 Revise the draft CONOPS Matrix to include several missing core elements (e.g., communications, log keeping, etc.)

4.3.2 Internally approve the ERL CONOPS Matrix.

4.3.3 Create an R2A2 for the ERL Control Room Technician and revise remaining ERL staff R2A2s to ensure that they are current with respect to job expectations.

4.3.4 Add OPM 3.15.2, *Response to PASS ODH Alarms During Refrigerator Shutdown,* to the ERL CONOPS Program.

4.3.5 Revise OPM 18.5.3.a, *Key Personnel,* to indicate the current Operations Coordinator.

4.3.6 Complete Operator training for the procedures identified in the CONOPS Matrix.

4.4 Post-Start Findings

None

4.5 Recommendations

None

5.0 Radiation, Laser and ODH Interlocks

5.1 Observations

Documents related to the ERL Access Controls System (ACS) were reviewed. Documents are maintained both in the old document control system (which is a spreadsheet-based system) and in the newer "Windchill" document control system. It took a long time to find and retrieve ACS drawings from these systems. Having redundant document control systems is problematic from the perspective of determining which system actually contains authoritative drawings.

5.2 LOIs

1. Verify radiation interlocks are fail safe	Adequate
2. Verify critical devices are controlled by a fail-safe interface to the interlock system	Adequate
3. Verify the interlock system requires the enclosure to be searched and secured prior to enabling beam	Adequate
4. Verify that interlock system components are labeled or readily identifiable	Adequate
5. Verify that an appropriate entry control program has been established	Adequate
6. Verify that periodic testing is being performed as required by the BNL Radiological Control Manual	Adequate
7. Verify that the interlock system has been placed under configuration control	Adequate
8. Verify that interlock design documentation has been placed under configuration control	Adequate after implementation of pre-start findings

5.1 Pre-Start Findings

5.1.1 Ensure that ACS design documentation is readily available for the ARR.

5.2 Post-Start Findings

5.2.1 Resolve the issue of maintaining redundant drawings in two separate document control systems.

5.3 Recommendations

None

6.0 Controls System, Cyber Security

6.1 Observations

ERL staff members were interviewed as to their respective roles regarding controls and response to system alarms. All interviewees were helpful and forthcoming. In general, housekeeping is a significant issue. The IRR Team recognizes that ERL is in the final phases of construction, but additional attention to housekeeping is required.

6.2 LOIs

1. Verify wiring/cabling for the controls hardware meets code	Adequate after implementation of pre-start findings
2. Validate process for managing configuration of computer software controls	Adequate
3. Ensure necessary cyber security requirements are met pertaining to control system networks	Adequate
4. Confirm testing for control room alarms, monitors and controls	Adequate
5. Ensure necessary training is in place for personnel that operate, test and maintain the control system	Adequate
6. Verify alarm set point configuration control	Adequate
7. Check that alarm response is clearly defined	Adequate
8. Verify wiring/cabling documentation and configuration control for controls hardware	Adequate
9. Review how the limits of equipment operations as defined in the ASE are handled by the controls system	Adequate
10. Assess control system reaction to a power outage	Adequate
11. Check that alarm response clearly defined	Adequate after implementation of pre-start findings
12. Review list of open items	Some remain. Post start
13. Review tools for controlling the release of controls system drivers and applications	Adequate
14. Examine controls reaction to a power outage	Not fully investigated
15. Examine and concur on process to change/modify hardware and software related to controls during commissioning	Adequate
16. Check that alarm response clearly defined	Adequate after implementation of pre-start findings
17. There is a plan that addresses cyber security on a site-wide basis and specifically for accelerator controls	Adequate
18. The cyber security risk assessment for accelerator controls adequately identifies threats and vulnerabilities specific to the	Adequate

operating environment	
19. The cyber-risk assessment for accelerator controls adequately identifies risks and counter measures to reduce risk to an acceptable level	Adequate
20. There is an authority to operate the system used to control accelerator functions within acceptable risks	Adequate
21. The cyber security plan incorporates recommended practices and protocols	Adequate
22. There are adequate personnel resources to maintain the cyber security program and processes	Adequate
23. There are adequate fiscal resources to maintain the cyber security equipment through near-term software and hardware upgrades	Adequate
24. There is adequate infrastructure to maintain and support cyber security for accelerator controls	Adequate
25. Software QA supports activities related to commissioning	Adequate
26. The development of accelerator controls is governed by applicable standards	Adequate
27. Accelerator controls software has accurate configuration information from users/owners for device control	Adequate
28. There are resources that allow controls software to be tested before implementation	Adequate
29. There is an adequate user feedback mechanism to resolve software issues	Adequate
30. Accelerator controls software is configuration managed	Adequate
31. There are adequate personnel resources to maintain the accelerator controls software applications	Adequate
32. There is adequate infrastructure to maintain and support accelerator controls software applications	Adequate
33. Software QA supports activities related to commissioning	Adequate

6.3 Pre-Start Findings

6.3.1 Remove non-plenum rated cables from the control room ceiling and run them in cable trays.

6.3.2 Properly dress cables into and out of equipment racks in the control room and mezzanine area.

6.3.3 Develop a plan to test control system alarms and provide alarm guidance to Operators.

6.3.4 Establish a plan to train Operators in the use of the Control System and document Operator training once performed.

6.3.5 Finish developing and issuing commissioning procedures for operating and testing controls systems.

6.3.6 Finish testing the laser system timing controls and document satisfactory performance.

6.3.7 Develop and issue a Machine Protection System (MPS) test procedure and document MPS test results.

6.4 Post-Start Findings

6.4.1 Finish Controls installation drawings and release them electronically.

6.4.2 Archive configuration documents for the MPS.

6.4.3 Complete labeling of equipment rack wiring.

6.4.4 Complete development of Controls software user interfaces

6.5 Recommendations

It might beneficial to put together an inspection team to monitor the state of "housekeeping" at the ERL facility at monthly intervals, until commissioning has been initiated.

7.0 Conventional Safety/Environment, Safety and Health (ESH)

7.1 Observations

The ERL Control Room and operational areas in Building 912 were walked down with the IRR Team and separately with the C-AD conventional safety counterpart. Previous ERL ESH findings and actions were reviewed with C-AD's Quality Assurance Manager to determine whether any actions were outstanding. Also, a review of the training assignments for ERL staff was conducted separately with the C-AD Training Coordinator and ERL Operations Coordinator to verify that training has been conducted for the hazards expected in ERL work spaces.

7.2 LOIs

1. Assess adequacy of procedures and practices related to fall protection, elevated work, material handling, compressed gas storage and use, use of cryogens, fire safety, life safety and laser safety	Adequate after implementation of findings
2. Determine whether prior safety committee actions have been addressed and closed out	Adequate after implementation of findings
3. Verify training for expected hazards that workers may encounter in ERL work spaces.	Adequate

7.3 Pre-Start Findings

7.3.1 Update fire and life safety postings in the ERL Control Room and ERL enclosure to reflect operational considerations.

7.3.2 Action description for action 7470.1.2 in the institutional Action Tracking System (ATS) does not reflect LESHC meeting 12-04 action assignment. Validate that LESCH assigned action is complete or is being tracked to completion.

7.4 Post-Start Findings

7.4.1 Label piping systems in the ERL enclosure as to hazard contents and direction of flow.

7.5 Recommendations

7.5.1 The fixed ladder for ERL enclosure roof access was inspected in CY2012 using fixed ladder inspection checklist Revision #1. The current SBMS ladder checklist is Revision #6. Consider re-evaluating the ladder using the more recent SBMS checklist.

7.5.2 Consider aligning ERL system expert training assignments with the hazards that they are expected to encounter at ERL (i.e., noise and job-specific hazards).

8.0 Electrical Safety and Lockout/Tagout (LOTO)

8.1 Observations

A review of the Klystron Accountable Key (Kirk Key) system was conducted with the C-AD Chief Electrical Engineer and the system was determined to be robust and sound. A review of the OPM 18.11 series (ERL LOTO procedures) for personnel entry into the ERL was conducted with the ERL Operations Coordinator. Also, a review of the Klystron power supply grounding and LOTO procedure was conducted with the ERL Radio-Frequency System Support Lead.

8.2 LOIs

1. A comprehensive list of Primary Authorized and Authorized employees is being maintained	Adequate
2. JTAs address training called out in procedures	Adequate
3. ERL staff have been trained to the new BNL LOTO training requirements	Adequate after implementation of findings
4. Verify ERL LOTO procedures are current and reflect requirements from SBMS	Adequate after implementation of findings
5. Observe field LOTOs, both simple and complex	Adequate
6. Equipment labeling LOTO procedures have been validated for accuracy and applicability by a knowledgeable person	Adequate

8.3 Pre-Start Findings

8.3.1 OPMs 18.11.1 and 18.11.2 need to be revised to identify training requirements, ensure consistency with updated terminology and SBMS LOTO Subject Area elements, and clearly indicate approval authority for ERL LOTO.

8.3.2 ERL Shift Leader training requirements need to be developed for determining lockout equivalency as per OPM 18.11.2 step 3.5.

8.4 Post-Start Findings

None

8.5 Recommendations

8.5.1 Existing complex LOTO instructions for the Klystron High Voltage power supply do not provide detail on the use of hook (workman) grounds. The procedure could be enhanced by a description of the function of this device and by adoption of the format exemplified in C-AD OPM 2.36.c.

Summary of Pre-Start and Post-Start Findings

Table 1
Summary of Pre-Start Findings

Identifier	Review Area	Finding
Pre-Start 1	Accelerator Safety Envelope (ASE)	Add a citation in the ERL ASE to the version of the SAD that applies.
Pre-Start 2	Safety Assessment Document (SAD)	Train ERL staff in C-AD OPM 2.5.6.1, *ERL High Current Operations.*
Pre-Start 3	Alarming and Interlocking Radiation Monitors	Document the rationale for placement of the interlocking monitors.
Pre-Start 4	Radiological Protection and Shielding	Document the frequency of change out (e.g., monthly, etc.) of the area monitoring TLDs as a part of the passive area monitoring plan, and label the TLDs to prevent unauthorized movement.
Pre-Start 5	Radiological Protection and Shielding	Formally approve the ERL bulk shield drawing and make modifications based upon the Engineering Change Notice (ECN) to address the large roof crack issue.
Pre-Start 6	Conduct of Operations	Revise the draft CONOPS Matrix to include several missing core elements (e.g., communications, log keeping, etc.).
Pre-Start 7	Conduct of Operations	Internally approve the ERL CONOPS Matrix.
Pre-Start 8	Conduct of Operations	Create an R2A2 for the ERL Control Room Technician and revise remaining ERL staff R2A2s to ensure that they are current with respect to job expectations.
Pre-Start 9	Conduct of Operations	Add OPM 3.15.2, *Response to PASS ODH Alarms During Refrigerator Shutdown,* to the ERL CONOPS Program.
Pre-Start 10	Conduct of Operations	Revise OPM 18.5.3.a, *Key Personnel,* to indicate the current Operations Coordinator.
Pre-Start 11	Conduct of Operations	Complete Operator training for the procedures identified in the ERL CONOPS Matrix.
Pre-Start 12	Radiation, Laser and ODH Interlocks (PPS)	Ensure that ACS design documentation is readily available for the ARR.
Pre-Start 13	Controls System, Cyber Security	Remove non-plenum rated cables from the control room ceiling and run them in cable trays.
Pre-Start 14	Controls System, Cyber	Properly dress cables into and out of

	Security	equipment racks in the control room and mezzanine area.
Pre-Start 15	Controls System, Cyber Security	Develop a plan to test control system alarms and provide alarm guidance to Operators.
Pre-Start 16	Controls System, Cyber Security	Establish a plan to train Operators in the use of the Control System and document Operator training once performed.
Pre-Start 17	Controls System, Cyber Security	Finish developing and issuing commissioning procedures for operating and testing controls systems.
Pre-Start 18	Controls System, Cyber Security	Finish testing the laser system timing controls and document satisfactory performance.
Pre-Start 19	Controls System, Cyber Security	Develop and issue an MPS test procedure and document MPS test results.
Pre-Start 20	Conventional Safety/ESH	Update fire and life safety postings in the ERL Control Room and ERL enclosure to reflect operational considerations.
Pre-Start 21	Conventional Safety/ESH	Action description for action 7470.1.2 in the institutional Action Tracking System (ATS) does not reflect LESHC meeting 12-04 action assignment. Validate that LESCH assigned action is complete or is being tracked to completion.
Pre-Start 22	Electrical Safety/LOTO	OPMs 18.11.1 and 18.11.2 need to be revised to identify training requirements, ensure consistency with updated terminology and SBMS LOTO Subject Area elements, and clearly indicate approval authority for ERL LOTO.
Pre-Start 23	Electrical Safety/LOTO	ERL Shift Leader training requirements need to be developed for determining lockout equivalency as per OPM 18.11.2 step 3.5.

Table 2
Summary of Post-Start Findings

Identifier	Review Area	Finding
Post-Start 1	Alarming and Interlocking Radiation Monitors	Remove the "20 mR/hr" labels from the Chipmunk interface boxes
Post-Start 2	Radiation, Laser and ODH Interlocks (PPS)	Resolve the issue of maintaining redundant drawings in two separate document control systems
Post-Start 3	Controls System, Cyber Security	Finish Controls installation drawings and release them electronically
Post-Start 4	Controls System, Cyber Security	Archive configuration documents for the MPS
Post-Start 5	Controls System, Cyber Security	Complete labeling of equipment rack wiring
Post-Start 6	Controls System, Cyber Security	Complete development of Controls software user interfaces
Post-Start 7	Conventional Safety/ESH	Label piping systems in the ERL enclosure as to hazard contents and direction of flow

Appendix A: Charge Letter

From: Lessard, Edward T
Sent: Friday, March 07, 2014 2:17 PM
To: Schaefer, Charles W; Theisen, Charles; Wilke, Jessica R; Ingrassia, Peter F; Czekaj, Walter; Etkin, Asher
Cc: Kayran, Dmitry; Karol, Raymond C; Jamilkowski, James; Brown, Kevin A; Passarello, David J; Beavis, Dana; Reich, Jonathan; Raparia, Deepak; Bergh, Paul J; Cirnigliaro, Peter P; Raparia, Deepak; Hammons, Lee; Sheehy, Brian; Goode, George A; Sullivan, Patrick T (DOE); Roser, Thomas; Fischer, Wolfram; Pile, Philip H; Tuozzolo, Joseph E; Sandberg, Jon N; Manning, Pamela; Mueller, Berndt; LaMontagne, Stephanie H; Passarello, David J; Maraviglia, John; McIntyre, Gary T; Anderson Jr., John
Subject: ERL IRR April 3 and 4

Ladies and Gentlemen:

Thank you for agreeing to review preparedness for Phase I of commissioning of ERL. Your expertise and work is greatly appreciated and is needed to move this project forward. Below is the charge and some details about the IRR process. A draft agenda for the on-site review is attached.

Thank you again for this effort.

Regards,
Ilan Ben-Zvi
C-AD Accelerator R&D Division Head

Charge

- Perform an independent evaluation of ERL readiness for high-current commissioning
- Identify actions that are needed for a successful Accelerator Readiness Review later in the year

Please focus on the following areas:

- Areas identified in the Accelerator Safety Order (training, procedures, CAS, AB documents, USIs)
- Records of past reviews, incidents, actions
- Conduct of Operations procedures
- QA (assurance systems)
- Interlocking safety systems
- Controls system
- Conventional safety practices such as LOTO

The following table summarizes IRR Team Members, Focus Areas and Counterparts

Charles Schaefer **IRR Team Lead**	SAD, ASE, USIs, Activities and Records Counterparts: D. Kayran, E. Lessard
Jesse Wilke	Past Actions and Reviews, Quality Assurance, Configuration Management, Documents and Records, CAS, Drawings Counterpart: D. Passarello
Charles Theisen	Controls System Counterpart: J. Jamilkowski

Peter Ingrassia	Conduct of Operations, Commissioning Plan, Commissioning Sequence, Fault Studies Counterparts: L. Hammons, D. Kayran
Charles Schaefer	Alarming and Interlocking Area Radiation Monitors Counterparts: D. Beavis, J. Reich
Charles Schaefer	Radiation Protection and Safety, Ozone, Hydrogen, Fault Study Plan Counterparts: D. Beavis, P. Bergh, R. Karol,
Walter Czekaj	Conventional Safety, ODH, Lasers, LOTO Counterpart: P. Cirnigliaro, L. Hammons, R. Karol
Asher Etkin	Personal Protection Systems: Interlocks for ACS, ODH, Laser Counterparts: J. Reich, B. Sheehy

The review process should consider:

- Lines of Inquiry (see attached for links)
- Document reviews
- Counterpart discussions
- Observations

Please report the following action items:

- Pre-Start – actions that should be addressed prior to the Accelerator Readiness Review
- Post-Start – actions that will not be completed prior to the Accelerator Readiness Review; the IRR team should recommend that these actions be identified to the ARR, and the plan and schedule for completing the actions provided to and discussed with the Accelerator Readiness Review team
- Opportunities for Improvement – action that the IRR team believes would significantly enhance the Accelerator Readiness Review process

Please prepare a report as follows:

Contents
- Brief discussion of the Findings and Observations within each area of the IRR
- Brief comments on opportunities for improvement
- Pre-start and post-start action items and opportunities for improvement

Schedule
- Please prepare a draft report drafted within 7 to 11 days following the on-site work
- Please submit the draft to counterparts for factual accuracy and comments
- Please submit the final report to C-AD management within approximately one week after comments received

Appendix B: IRR for ERL High Current Commissioning A G E N D A

Thursday April 3, 2014 (DAY 1)

Conference Room	Time	Description	Lead (s)
LCR	8:30 – 9:00	IRR Team Meeting	C. Schaefer
LCR and ERL	9:00 – 9:20	Welcome & Introductions Safety Briefing	I. Ben-Zvi E. Lessard
	9:20 – 9:40	Readiness Status and Look Ahead	I. Ben-Zvi
	9:40 – 10:00	ERL ASE and SAD/Credited Controls and Past Action Items	E. Lessard and D. Passarello
	10:00 – 10:30	Tour of the ERL Area	
	10:30 – 10:50	Commissioning Sequence and Conduct of Operations	D. Kayran and L. Hammons
LCR	10:50 – 11:10	Interlocks	J. Reich and R. Karol
LCR	11:10 – 11:30	Radiological Issues	D. Beavis and P. Bergh
LCR	11:30 – 12:00	Conventional Safety Issues	P. Cirnigliaro and R. Karol
	12:00 – 1:00	Break	
	1:00 – 5:00	Team Interviews, documents & records reviews, system walk-downs, work observations, discussions, breakout sessions	Team Members & Counterparts

Friday April 4, 2014 (DAY 2)

Conference Room	Time	Description	Lead (s)
LCR	8:30 – 9:00	IRR Team Meeting	C. Schaefer
	9:00 – 12:00	Team Interviews, documents & records reviews, system walk-downs, work observations, discussions, breakout sessions	Team Members & Counterparts
LCR	1:00 – 4:00	IRR Team Meeting	C. Schaefer
LCR	4:00 – 5:00	C-AD Debrief	C. Schaefer

From: Lessard, Edward T
To: Rokni, Sayed H.; cossairt@fnal.gov; "erickson@SLAC.Stanford.EDU"; Schaefer, Charles W; Ian Evans
Cc: Kayran, Dmitry; Passarello, David J; Lessard, Edward T; Theisen, Charles; Jamilkowski, James; Hammons, Lee; Beavis, Dana; Bergh, Paul J; Karol, Raymond C; Cirnigliaro, Peter P; Etkin, Asher; Reich, Jonathan; Fischer, Wolfram; Pile, Philip H; Roser, Thomas; Manning, Pamela; Sullivan, Patrick T (DOE); Brock, Jenifer; Mattson, Gail
Subject: ERL Phase 1 ARR Charge
Date: Wednesday, April 23, 2014 2:31:00 PM
Attachments: Specific Lines of Inquiry for ERL ARR.pdf
General LOIs.pdf
Draft Agenda - ERL ARR July 2014.pdf

Dear Sayed:

Thank you for agreeing to head the Accelerator Readiness Review for Phase I of ERL commissioning on July 29, 30 and 31, 2014. Based on your recent email, the team members will be Don Cossairt (FNAL), Ian Evans (SLAC) and Roger Erickson (SLAC). Please check if their schedules will work out. Additionally, Chuck Schaefer from BNL's ESH Directorate will join the team.

Phase I includes commissioning with high current beam from the gun to the dump, but does not include the complete ERL loop, which will be the subject of a Phase II ARR. You and your team's expertise and work is greatly appreciated and is needed to move this project forward. Below is the charge and some details about the BNL ARR process. A draft agenda and lines of inquiry for the on-site review are attached.

Pam Manning (631-344-4072) will be your contact for information regarding access to web based documents and other administrative matters. It is necessary for you to go to the BNL website: http://www.bnl.gov/guv/gis.asp and register on the Guest Information System at BNL for your visit here (please choose Collider-Accelerator Department as 'department to be assigned' and Ed Lessard as the 'host'). Also, please contact Pam regarding travel arrangements.

Thank you again for this effort.

Regards.

Ilan Ben-Zvi

C-AD Accelerator R&D Division Head

Charge
• Please perform an independent Accelerator Readiness Review of ERL gun and beam transport to the dump for high-current commissioning
• Please identify actions that are needed for a successful Phase II Accelerator Readiness Review of the complete ERL later in the year

Please focus on the following areas:
• Areas identified in the Accelerator Safety Order (training, procedures, CAS, AB documents, USIs)

• Records of past reviews, incidents, actions
• Conduct of Operations procedures
• QA (assurance systems)
• Interlocking safety systems
• Controls system
• Conventional safety practices such as LOTO

The following summarizes focus areas and BNL counterparts.

SAD, ASE, USIs, Activities and Records
Counterparts: D. Kayran, E. Lessard

Past Actions and Reviews, Quality Assurance, Configuration Management, Documents and Records, CAS, Drawings
Counterpart: D. Passarello

Controls System
Counterparts: Charles Theisen, J. Jamilkowski

Conduct of Operations, Commissioning Plan, Commissioning Sequence, Fault Studies
Counterparts: L. Hammons, D. Kayran

Alarming and Interlocking Area Radiation Monitors
Counterparts: D. Beavis, J. Reich

Radiation Protection and Safety, Ozone, Hydrogen, Fault Study Plan
Counterparts: D. Beavis, P. Bergh, R. Karol

Conventional Safety, ODH, Lasers, LOTO
Counterpart: P. Cirnigliaro, L. Hammons

Personal Protection Systems: Interlocks for ACS, ODH, Laser
Counterparts: J. Reich, A. Etkin

The review process should consider:

• Lines of Inquiry (see attached)
• Document reviews
• Counterpart discussions
• Observations

Please report the following action items:

Pre-Start – actions that should be addressed prior to the Phase I approval by DOE
Post-Start – actions that may be completed after Phase I approval; the ARR team should recommend that these actions be identified to the ERL management, and that management's plan and schedule for completing the actions be provided to and discussed with the Accelerator Readiness Review team
Opportunities for Improvement – actions that the ARR team believe would significantly enhance the Phase II Accelerator Readiness Review process

Please prepare a report as follows:

Contents

- Brief discussion of the Findings and Observations within each area of the ARR
- Brief comments on opportunities for improvement
- Pre-start and post-start action items and opportunities for improvement

Schedule

- Please prepare a draft report drafted within 7 to 11 days following the on-site work
- Please submit the draft to counterparts for factual accuracy and comments
- Please submit the final report to C-AD management within approximately one week after comments received

DRAFT

APPENDIX C: PLAN OF ACTION

ERL ARR TEAM
PLAN OF ACTION

COLLIDER-ACCELERATOR DEPARTMENT
ERL GUN TO DUMP COMMISSIONING

1. OBJECTIVE/SCOPE

The objective of this Accelerator Readiness Review (ARR) is to ensure that commissioning of the ERL superconducting RF gun to the beam dump can be performed in a safe and environmentally responsible manner. The scope of this ARR includes all activities associated with ERL commissioning of the 3.5 MeV beam from the gun to the dump at the Building 912 ERL accelerator enclosure.

The supporting policies and procedures will be among the deliverables to the ARR team.

This plan of action was developed with the ARR Team and is required prior to commissioning and operations of new accelerators, and is a BNL prerequisite to conducting the ARR.

The ARR is a process for ensuring that facility conditions and operations with the potential to affect worker or public safety and health, or to have a negative impact on the environment, have been evaluated, and the appropriate safeguards established. This plan guides the ARR process to be conducted in accordance with DOE Order 420.2C using an approach consistent with the draft DOE Guide 420.2–1A (August 2013) and the BNL Standards Based Management System (SBMS) Accelerator Safety Subject Area. In accordance with DOE Order 420.2C, the ARR ensures the following processes are in place:

1. An appropriate Contractor Assurance System that maintains an internal assessment/review program
2. An appropriate Facility Configuration Management Program that is related to accelerator safety
3. Credited Controls and appropriate administrative processes related to accelerator safety (e.g. training, procedures, etc.).

Additionally, consistent with the DOE Guide 420.2–1 and draft DOE Guide 420.2–1A, the ARR should verify:

1. An acceptable Safety Assessment Document (SAD) has been properly developed in accordance with DOE O 420.2C requirements, and has been reviewed and approved in accordance with the BNL internal safety review system.
2. An adequate Accelerator Safety Envelope (ASE) has been developed, is supported by the SAD, and approved in accordance with BNL and Brookhaven DOE Site Office (BHSO) requirements.
3. The facility to be commissioned is in compliance with ASE requirements.
4. An appropriate Commissioning Plan has been developed.
5. An appropriate Unreviewed Safety Issue (USI) process has been developed and is being utilized.
6. Procedures necessary for the safe operation of the facility have been developed, reviewed, and approved, and an appropriate process for the development, review and approval of new and revised procedures is in place.
7. Procedures to deal with abnormal and emergency situations have been prepared and are approved for use.
8. Records important for commissioning activities are properly controlled.
9. Equipment and systems having safety importance, as described in the SAD, have been installed and have been appropriately tested.
10. Personnel training and qualification programs relevant to safe commissioning have been established.
11. Clearly defined roles and responsibilities have been established for accelerator commissioning activities, including those for training and procedures related to safety.
12. An appropriate assurance process for the review of the accelerator safety program elements as specified in the CRD of DOE Order 420.2C is in place.

The ARR is not an extensive wall–to–wall assessment of all aspects of commissioning, but a performance based assessment of the proposed commissioning activities designed to ensure the facility will be commissioned in a safe, secure, and environmentally sound manner. Weaknesses identified as part of the ARR process should become part of an overall lessons learned program.

2. ERL ARR TEAM MEMBERS AND TOPICAL AREAS

NAME	AFFILIATION AND CONTACT INFORMATION	TOPICAL AREA
Sayed Rokni (Team Lead)	Telephone: Cell Phone: Email:	SAD, ASE, USIs, Activities and Records Past Actions and Reviews, Quality Assurance, Configuration Management, Documents and Records, CAS, Drawings
Roger Erikson	Telephone: Cell Phone: Email:	Controls Systems Conduct of Operations, Commissioning Plan, Commissioning Sequence, Fault Studies
Don Cossairt	Telephone: Cell Phone: Email:	Alarming and Interlocking Area Radiation Monitors Radiation Protection and Safety, Ozone, Hydrogen, Fault Study Plan Personal Protection Systems: Interlocks for ACS, ODH, Laser
Chuck Schaefer	Telephone: Cell Phone: Email:	Controls Systems Alarming and Interlocking Area Radiation Monitors
Ian Evans	Telephone: Cell Phone: Email:	Conduct of Operations, Commissioning Plan, Commissioning Sequence, Fault Studies Radiation Protection and Safety, Ozone, Hydrogen, Fault Study Plan Conventional Safety, ODH Lasers, LOTO Personal Protection Systems: Interlocks for ACS, ODH, Laser
Jessie Wilke	Telephone: Cell Phone: Email:	Past Actions and Reviews, Quality Assurance, Configuration Management, Documents and Records, CAS, Drawings SAD, ASE, USIs, Activities and Records

A DOE Site Office (BHSO) representative will observe and provide DOE oversight of this ARR.

- Patrick Sullivan, DOE BHSO Observer (ptsullivan@bnl.gov, 631–344–4092)

C-AD Administrative support for the ARR team:

- Pam Manning, (pmanning@bnl.gov, 631–344–4072)

3. C-AD PERSONNEL CONTACT INFORMATION

NAME	CONTACT INFORMATION	RESPONSIBILITY/TOPICAL AREA
Thomas Roser	Telephone: Cell Phone: Email:	C-AD Chairman
Ilan Ben-Zvi	Telephone: Cell Phone: Email:	C-AD Associate Chair for Accelerator R&D Division, ERL Accelerator Facility Manager
Edward Lessard	Telephone: Cell Phone: Email:	C-AD Associate Chair for ESSHQ IRR/ARR Process Review Process for Facility Modifications Authorization Basis Documents USI Process
Dmitri Kayran	Telephone: Cell Phone: Email:	ERL Liaison Physicist, ERL Project Leader, ERL Shift Leader (operator) Commissioning Plan Documentation and Procedures Readiness Personnel Readiness System and Process Readiness
Lee Hammons	Telephone: Cell Phone: Email:	ERL Operations Coordinator, Work Control Coordinator Conduct of Operations Operator Training and Qualifications
Jonathan Reich	Telephone: Cell Phone: Email:	Access Controls Group Leader Access Control System (ACS) Safety Related Interlocks
Ray Karol	Telephone: Cell Phone: Email:	C-AD ESSHQ Division Head Credited Controls Procedure USIs for ERL
Dana Beavis	Telephone: Cell Phone: Email:	C-AD Radiation Safety Committee Chair Shielding Access Control Logic
Paul Bergh	Telephone: Cell Phone: Email:	BNL Facility Representative for C-AD Radiological Control Radiation Monitoring
Peter Cirnigliaro	Telephone: Cell Phone: Email:	C-AD Work Control Manager Work Planning and Control Industrial Safety

Charles Theisen	Telephone: Cell Phone: Email:	Hardware Controls Systems Head Controls Machine Protection Systems
Dave Phillips	Telephone: Cell Phone: Email:	ERL Liaison Engineer Engineered ERL Facilities IFM Interface
James Jamilkowski	Telephone: Cell Phone: Email:	Controls Front End Systems Group Leader Cybersecurity Controls
Brian Sheehy	Telephone: Cell Phone: Email:	Laser Physicist Lasers
Asher Etkin	Telephone: Cell Phone: Email:	C-AD ESH Coordinator, Access Controls Physicist Laser Safety ACS Testing Review
Dave Passarello	Telephone: Cell Phone: Email:	QA Manager Resolution of Past Actions Document and Record Control
Tom Seda	Telephone: Cell Phone: Email:	ERL Control Room Technician (operator), Accelerator R & D Division Research Space Manager
Vadim Ptitsyn	Telephone: Cell Phone: Email:	ERL Shift Leader (operator)
Robert Kellerman	Telephone: Cell Phone: Email:	ERL Control Room Technician (operator)
Gary McIntyre	Telephone: Cell Phone: Email:	ERL Work Control Coordinator
Erdong Wang	Telephone: Cell Phone: Email:	Photocathode Physicist
Robert Lambiase	Telephone: Cell Phone: Email:	Power Supply Engineering
Sergey Belomestnykh	Telephone: Cell Phone: Email:	SRF Group Head SRF Gun
Alex Zaltsman	Telephone: Cell Phone: Email:	RF Group Leader
Roberto Than	Telephone: Cell Phone:	Cryogenic Systems Head

	Email:	
Mike Mapes	Telephone: Cell Phone: Email:	Vacuum Systems Group Leader

4. LINES OF INQUIRY (LOI)

The C-AD organization developed LOIs as appropriate for topical areas and listed them in Sections 1-4 of the ARR Report. ARR Team input on the content of the LOIs was solicited prior to finalization of the LOIs.

5. METHODS FOR COLLECTING DATA AND INFORMATION

A performance based approach will be used for the ARR. Methodology for collecting performance based information will include document reviews, system walk–downs and/or inspections of the physical plant, interviews with C-AD staff and management, direct observation of work as appropriate and sampling of the proposed commissioning activities.

A dedicated website has been established to provide access to key documentation that includes a Safety Assessment Document (SAD), an approved Accelerator Safety Envelope (ASE), ERL Unreviewed Safety Issues (USI), and documents related to assurance, configuration management, and conduct of operations, among other items. The ARR website can be accessed via the following link:

https://indico.bnl.gov/conferenceDisplay.py?confId=762

All team members are expected to participate in all of the on–site review. The ARR members are to examine objective evidence that demonstrates activities, procedures, instructions, and records are being properly executed and documented.

The on–site review is expected to last approximately 2.5 days on a schedule agreed upon between C-AD management and team members. In addition, a telephone-meeting will be arranged with all team members approximately 1 week prior to the on–site visit to provide the team with a status report, to review the ARR process and POA, and to discuss any documents submitted to the team including requests for additional documents.

6. RESULTS OF THE ARR

The ARR Team will prepare a report that adequately documents the activities of the review team. The report will document the review and address the team membership, scope of the review, review criteria, results of the review, and a conclusion that indicates whether the accelerator safety implementation is adequate to support safe operation. Each team member shall document their evaluation, and identify any findings that require resolution.

Findings reported by the team should be categorized as Pre–start or Post–start findings. Items that must be resolved prior to the Accelerator Readiness Review (ARR) will be identified as Pre–start items. Items that may be resolved after operations commences will be identified as Post–start items. Cross–cutting issues, such as procedures, staffing levels, and personnel qualifications will be evaluated by team members in applicable areas and recommendations

made based upon those inputs.

The team will prepare and present a closeout briefing, including any Pre– and Post–start findings upon completion of the on–site review on July 31, 2014. A draft written report documenting the activities of the IRR team and any pre–start and post–start findings will be prepared and submitted to the Chairman of the Collider-Accelerator Department within two weeks after completion of the review (August 14, 2014) for a factual accuracy check. The final report will be delivered one week after the team leader's receipt of comments from the factual accuracy review. The team lead will be responsible for drafting the reports, and incorporating comments. Each team member will be responsible for submitting sections of the report, and for reviewing comments on each draft phase.

– END-

OFFICE OF RADIATION PROTECTION

Ilan Ben-Zvi, Ph.D.
Associate Chair and Division Head, Accelerator R&D
Brookhaven National Laboratory
Bldg. 911, P.O. Box 5000, MS 911B
Upton, NY 11973, USA
+1(631) 344-5143

Sayed H. Rokni, Ph.D., CHP
Radiation Safety Officer
Radiation Protection Department Head
SLAC National Accelerator Laboratory
2575 Sand Hill Road, MS 48
Menlo Park, CA, USA 94025
+1 (650) 926 3544

15 September 2014

Dear Dr. Ben-Zvi,

RE: ERL ARR REPORT JULY 29-31, 2014

The Accelerator Readiness Review (ARR) team for Energy Recovery Linac, gun and beam transport to the dump, has completed its work by reviewing the current status of this facility at Brookhaven National Laboratory. Team members visited relevant areas of the facility, and discussed a wide variety of technical issues, processes, policies, and procedures as part of this review. The attached report summarizes observations, pre-start and post starts findings, opportunities for improvement, and other comments from their review.

The committee found the C-AD and ERL management and staff to be open, helpful, and very willing to provide explanations or demonstrations to support our inquiries. Their efforts made our visit pleasant and productive.

On behalf of the ARR committee, I wish ERL a safe, efficient and productive commissioning.

Sincerely,

Sayed Rokni

Enclosures (1)
CC:
ARR Committee
- Chuck Schaefer
- Don Cossairt
- Ian Evans
- Jessie Wilke
- Roger Erickson

BNL
- Berndt Mueller
- Edward Lessard
- Gail Mattson
- Thomas Rosen

DOE BHSO
- Patrick Sullivan

ACCELERATOR READINESS REVIEW REPORT

FOR

ENERGY RECOVERY LINAC (ERL) COMMISSIONING

JULY 29-31, 2014

BROOKHAVEN
NATIONAL LABORATORY

ERL Accelerator Readiness Review Team

LEAD Sayed Rokni

MEMBER Ian Evans

MEMBER Don Cossairt

MEMBER Roger Erickson

MEMBER Jessica Wilke

MEMBER Chuck Schaefer

Signed for the Committee S. H. Rokni 9/15/2014
Sayed Rokni, Chair, ARR ERL

TABLE OF CONTENTS

EXECUTIVE SUMMARY 3
1.0 Documentation and Procedure, Program Operations 5
1.1 Safety Assessment Document (SAD) 5
1.2 Accelerator Safety Envelope (ASE) 5
1.3 Unreviewed Safety Issue (USI) Process 6
1.4 Resolution of Past Action Items 6
1.5 Commissioning Plan and Related Documents 7
1.6 C-AD ESH Programs 8
1.7 Document and Record Control 9
1.8 Assurance System 10
1.9 IFM Work Planning and Control 11
2.0 Accelerator Facility Safety 12
2.1 Configuration Management (CM) of Credited Controls 12
2.2 Conduct of Operations 13
2.3 Safety Review Committees 14
3.0 Facility Additions and Modifications 15
3.1 Safety Review for Accelerator Hardware (Controls) 15
4.0 Summary of Pre-Start and Post-Start Findings 17
5.0 Charge to the Committee and the Committee Responses 19

APPENDIX A: ARR TEAM CHARGE
APPENDIX B: ARR TEAM MEMBERS
APPENDIX C: PLAN OF ACTION
APPENDIX D: LINES OF INQUIRY

EXECUTIVE SUMMARY

An Accelerator Readiness Review (ARR) has been conducted for Collider-Accelerator Department's Energy Recovery Linac (ERL) per the Charge (see Appendix A) from the Associate Chair for the C-AD Accelerator R&D Division. The objective of the ARR was to provide assurance that commissioning the ERL gun to the dump can be performed in a safe, secure and environmentally sound manner. The ARR was conducted in accordance with DOE Order 420.2C, *Safety of Accelerator Facilities,* using an approach consistent with the draft DOE Guide 420.2-1A, *Accelerator Facility Safety Implementation Guide for DOE Order 420.2C, Safety of Accelerator Facilities*[1].

The ARR Team was led by Sayed Rokni from SLAC National Accelerator Laboratory and membership consisted of Don Cossairt (FNAL), Ian Evans (SLAC), Roger Erickson (SLAC), Jessie Wilke (BNL) and Chuck Schaefer (BNL) with extensive and diverse accelerator safety expertise (See Appendix B). The site visit portion of the ARR emphasized a performance-based approach with a strong focus on field activities that included walk-downs and inspections of systems and structures, inspections of safety systems, interviews, and roundtable discussions with staff. A comprehensive set of Lines of Inquiry (LOIs) was provided to guide the review. The committee also used their own professional expertise to focus on specific areas.

For each topical area, pre-start and post-start findings are presented along with opportunities for improvements and noteworthy practices. The ARR Team identified 9 pre-start and 2 post-start findings, 3 opportunities for improvement and 4 noteworthy practices. All pre-start findings are to be resolved prior to the commissioning activities at beams powers higher than 70 Watts. Post-start findings may be resolved in a reasonable timeframe after the commissioning activities have started and should be tracked to completion. Opportunities for improvement are offered as recommendations from the review team, but should not be considered mandatory requirements.

The ARR team noted that an extensive set of mature policies, processes, procedures, documents and methods to implement the requirements of the Accelerator Safety Order has been established by C-AD that will be applied to the ERL. C-AD has a well-established history of carrying out technically challenging accelerator programs and complex operations safely and effectively within the structure of these processes. The ARR team assumes that the C-AD organization will apply the same management and review processes to the ERL as have been applied to the AGS and RHIC facilities.

Based on this review, the ARR team concludes that in the area of ERL commissioning, from the gun to the dump (scope of this ARR), C-AD has in place processes, procedures and qualified staff necessary to complete the installation and commissioning of ERL safely and in compliance with the DOE Order 420.2C requirements. Completion of the pre-start findings will ensure a safe and compliant commissioning from gun to the dump at planned high currents.

The ARR committee members recognize that the unique high-current superconducting RF Energy Recovery Linac will primarily function in a commissioning and testing mode. Based on this review, ARR committee members recommend that commissioning of ERL gun to the dump proceed in phases. Namely, with the completion of specific pre-start findings, we recommend approval for commissioning at beam powers of up to 70 Watts, consistent with the previously approved low current mode by DOE BHSO.

---

[1] DOE Guide 420.2-1A was approved August 01, 2014.

Completion of pre-start findings 1 and 7 are not required for commissioning at average beam power of less than 70 Watts. All pre-start findings need to be completed and their completion verified before commissioning at higher beam powers.

A member of the ARR team, Mr. Chuck Schaefer will verify the completion of the pre-start findings on behalf of the committee. The ARR chair will recommend approval for commissioning after the pre-start findings are completed and verified.

1.0 Documentation and Procedures, Program Operations

1.1 Safety Assessment Document (SAD)

1.1.1 Observations

- The C-AD Safety Assessment Document (SAD), dated May 2011, has been properly developed in accordance with DOE O 420.2C requirements, and has been approved by the C-AD and BNL management.
- The C-AD SAD contains the safety analysis performed to support ERL ASE.

1.1.2 Opportunities for Improvement

- None

1.1.3 Pre-Start Findings

- Prior to exceeding 70 Watts of average beam power additional controls to mitigate radiological hazards related to the adequacy of ERL shielding and other systems for high-power operations need to be formally documented per C-AD procedures and implemented as per the Commissioning Sequence, OPM 18.5.8 and relevant RSC procedures in OPM Chapter.

1.1.4 Post-Start Findings

- None

1.1.5 Noteworthy Practices

- None

1.2 Accelerator Safety Envelope (ASE)

1.2.1 Observations

- ERL has an approved ASE that defines the credited controls for the maximum credible beam incident. It defines the maximum credible beam power and beam energy (3.5 MeV for gun, 1.5 MW of power to gun and 1.5 MW of beam power on beam dump). The ERL ASE was approved by the BHSO on June 6, 2012.
- ERL ASE defines the physical and administrative bounding conditions and controls for safe operations based on the safety analysis documented in the SAD.
- Approved OPM procedures are in place describing the ASE for High Current Commissioning and for the commissioning ASE for Low Power Test.

1.2.2 Opportunities for Improvement

- None

1.2.3 Pre-Start Findings

- None

1.2.4 Post-Start Findings

- None

1.2.5 Noteworthy Practices

- The distinction between the Credited safety systems and defense in depth that supports compliance with ASE requirements has been clearly documented.

1.3 Unreviewed Safety Issue (USI) Process

1.3.1 Observations

- The ARR committee reviewed one example of use of USI process; specifically the request for exemption leading to the BHSO approval of the Low Power Testing.
- C-AD has a well-established and strong USI Process that is described in C-AD (OPM 1.10.1) "Procedure for Identifying Unreviewed Safety Issues", Revision 07, Dated November 2012 and 1.10.1.a C-A USI Determination Form. This process will be employed for operations of the ERL.
- New projects or accelerator facility modifications, procedure changes and discovery of unplanned issues are reviewed through the USI determination process for potential impact on Credited Controls.
- The ARR team interviewed ERL operation staff and management; the management was knowledgeable about the USI process and requirements, but the operators were not familiar with the details. However, operators were knowledgeable and trained on escalation mechanisms.

1.3.2 Opportunities for Improvement

- C-AD should evaluate ERL staff understanding and use of the USI Checklist as a support to work planning and ensure its use is meeting management's expectations.

1.3.3 Pre-Start Findings

- None

1.3.4 Post-Start Findings

- None

1.3.5 Noteworthy Practices

- None

1.4 Resolution of Past Action Items

1.4.1 Observations

- All Pre-start items from the ERL IRR performed in April 2014 have been completed, verified by the Quality Assurance group and closed.
- There were seven Post-start Findings from the ERL IRR performed in April. One item is Closed, two are Completed waiting independent verification (planned for August and September), four are open with due dates in December 2014.
- The C-AD uses several methods to track actions. The Institutional Assessment Tracking System (ATS) is used for high level reviews as required by the BNL Standards Based Management System (SBMS). C-AD Committee Checklists are used for near term, life

safety items. A C-AD Family ATS is used to for internal assessment findings that do not require immediate attention.

1.4.2 Opportunities for Improvement

- None

1.4.3 Pre-Start Findings

- None

1.4.4 Post-Start Findings

- Complete the remaining Post-Start Findings from the ERL IRR as currently planned and verify completion prior to commissioning for the mission begins

1.4.5 Noteworthy Practices

- None

1.5 Commissioning Plan and Related Documents

1.5.1 Observations

- Draft commissioning plans have been developed which appear adequate to guide initial commissioning activities. As a new machine that promises to extend the frontiers of accelerator technical capabilities, this facility will evolve as tests are conducted and design details are refined. It is important that commissioning plans be developed and carefully thought through, but that they remain flexible to adapt to changing requirements. The ARR Team recognizes the importance of managing this program to be open to innovation, while always remaining vigilant to ensure that the program is conducted safely and that the integrity of the equipment is reasonably well protected. The commissioning sequence, OPM 18.5.8, which was draft at the time of the ARR, has been approved by C-AD after the review.
- The RSC Checklist provides a single document to collect signatures from SMEs that their required systems for radiation protection are ready for operations with a radiation source, including x-ray generating devices and beam. However, the actual specific technical prerequisites for safe commissioning, including the specific devices subject to rigorous control, are listed elsewhere and not immediately available to the persons carrying out the control room activities. The team was favorably impressed when shown the State Table document, which appears to be a clear and well-controlled list of credited devices needed to ensure radiation safety.
- When asked about these devices and their specific functions and settings, most of the persons involved in beam operations were aware of the existence and importance of the State Tables document, but were not conversant with the contents. As an opportunity for improvement, the team recommends that staff awareness of the significance of the controlled devices critical to radiation safety should be enhanced. Having a single brief document in the control room that summarizes the specific safety devices would ensure that the control room staff will be sensitive to the importance of these devices and would provide them with the formal assurance that they have approval to commence beam operations.

1.5.2 Opportunities for Improvement

- A single brief document in the control room should be prepared that summarizes the specific safety devices and any trip thresholds or other device settings that must be controlled to meet the approved safety limits. This document would help provide the control room staff with the formal assurance that they have approval to commence beam operations.

1.5.3 Pre-Start Findings

- The ERL Commissioning Sequence, OPM 18.5.8, which was in draft form at the time of the ARR, needs to be finalized, reviewed and approved by C-AD management.

1.5.4 Post-Start Findings

- None

1.5.5 Noteworthy Practices

- None

1.6 C-AD ESH Programs

1.6.1 Observations

- Based on interviews and visit/walk down of the ERL facility, there appears to be a strong and positive ESH influence on the scientific mission, with an adequate level of support for this stage of the project. R2A2's are complete and are suitable to support activities into and beyond commissioning. ESH staff and functions are supported within C-AD by a number of safety committees that are charged with providing an independent review of systems and sub-systems, providing assurance to C-AD senior management that the ERL meets the standards required to operate. The committees include the Accelerator Systems Safety Review Committee (ASSRC) and the C-AD's Radiation Safety Committee (RSC).
- There are many procedures in place that govern how C-AD and by extension the ERL will operate. These reflect a high level of knowledge and formality with respect to Conduct of Operations, and afford continuity across C-AD operated accelerators. I reviewed the ASSRC Checklist, C-AD 1.11.2 "F&O Interface Document" and many OPM's. It is clear effort and thought have been put into their development, as they come across clear and concise.
- The ERL remains a research project, but by having distinct roles (Operations Coordinator, Shift Team Leads & Shift Technicians) in the control room, provides assurance that the required processes to commission the ERL safely and efficiently are being followed.
- We reviewed engineering drawings, placement of ODH sensors in the ERL for both Liquid Helium and Liquid Nitrogen losses, System State Tables that reflect access permits during routine operations and under an ODH fault conditions, credited controls that respond to an ODH events and configuration management of these systems. Procedures governing use and response to abnormal events were available for review.
- Hydrogen and Ozone production have been analyzed in BNL-97122-2012-IR "Analytical approximate radiation effects due to Bremsstrahlung". Even in a worst case scenario,

Hydrogen production is capped at <6 liters per hour. This will be vented automatically within the ERL building (not the ERL cave). Normal HVAC air changes are more than sufficient to suitably dilute and remove Hydrogen vented to the room and remove this hazard. Ozone production was analyzed for a 1 MW beam with 0.25 m of iron shielding. Ozone production was conservatively calculated to be 1E-04 ppm (parts per million), which is well within established exposure limits of 0.1ppm averaged over 8 hours.

- There is an institutional Lock Out – Tag Out (LOTO) program in place that is established in BNL's Standard Based Management System (SBMS). This is augmented by a Radiation Hold (RS Hold) program that allows hardware to be locked out for radiological purposes. It carries over the fundamental philosophy of LOTO. Tracking is via a system of locks and tags, while placement and communication of RS Holds is further supported by an electronic log available to operations staff.
- The appropriate section within SBMS, which incorporates the prevailing ANSI standard, covers lasers. The Laser Lab has a "Standard Operating Procedure for the ERL Laser", which is the vehicle for implementing required standards. It defines line management responsibility and has the requisite laser system hazard analysis, conditions to operate and system configuration, established hardware controls, required personal protective equipment (PPE) and minimum training requirements. Items under configuration control such as shutters, attenuator (for low power running) and items in the PASS are well secured and labeled as such. There is a procedure in place that covers removal or alteration of these items. Access control is covered via a proximity card that is linked to current training profiles of ERL staff.
- It was observed that a pressurized gas manifold adjacent to the dump inside the ERL enclosure lacked any process fluid labeling. As all piping needs to be labeled, this should be rectified and a thorough inspection of other process piping within the ERL should be performed.

1.6.2 Opportunities for Improvement

- None

1.6.3 Pre-Start Findings

- Label process piping to/from the gas manifold adjacent to the dump

1.6.4 Post-Start Findings

- None

1.6.5 Noteworthy Practices

- None

1.7 Document and Record Control

1.7.1 Observations

- C-AD OPM 1.4.3 for Issuing, Revising, or Changing the Status of Permanent Procedures is thorough and implemented in the department, applies to the ERL, and is being implemented to document ERL specific procedures (Chapter 18 of the C-AD OPM).

    - The ESSHQ group assigns reviewers and reviews procedures for format and usability
    - Assessments performed by QA/QC management review procedure adherence.
  - C-AD OPM 13.4.1 provides instruction on Records Management for all of C-AD, including ERL and is in concert with the BNL SBMS requirements.
  - OPM 13.4.2d is the list of C-AD Records including the description, retention plan and responsible party.
  - One or two of each of the following records were reviewed for evidence of procedure compliance:
    - Design Drawings
    - Engineering Change Notices
    - Procedure development and revision tracking sheet
    - Employee R2A2 (QA Manager, ERL Technician)
    - Internal Assessments/Audits

1.7.2 Opportunities for Improvement

- None

1.7.3 Pre-Start Findings

- None

1.7.4 Post-Start Findings

- **Practices** None

1.7.5 Noteworthy

- None

1.8 Assurance System

1.8.1 Observations

- A high level review of several QA processes was performed:
  - QA function in C-AD
  - Document / Procedure Management (OPM1.4.3)
  - Procurement (OPM 13.7.1)
  - Design, Drawings (OPM 13.6.1)
  - Records Management (OPM 13.4.2, 13.4.2d)
  - Independent Assessment and Nonconformance and Corrective/Preventive Action Tracking (OPM 13.10.1)

For each process, the relevant procedure was reviewed. ERL records indicating the procedure was being followed were reviewed. The processes are well established in the C-AD and are being applied to the ERL as they are to other accelerators and equipment in the department.

- The objective of the C-AD Independent Assessment program is to verify the implementation of the C-AD OPM, OSH, EMS programs, specifically that procedures are being followed. All OPMs are scheduled for review on a prescribed basis (annual, 24, 36,

48 months). The QA Group reviews documents and records required by the OPM and interviews staff who implements the OPM. Assessments are documented. Findings are assigned to the responsible Group Leader / Technical Supervisor for corrective action. Actions are tracked in the C-AD Family ATS.

- Observation of work performance is accomplished via weekly C-A management walk-throughs. These are documented in a C-AD database as well as the BNL database. Items requiring follow-up are tracked in the C-AD Family ATS.
- Assessments are performed as scheduled, documented and corrective actions tracked as prescribed in OPM 13.10.1.
- The QA manager is involved in the review of suppliers, review and approval of SOWs, Tech Specs, requisitions greater than $10K, and is a member of RFP Review Boards.
- Requirements for Design, Drawing and Specification Requirements and Configuration Management are complete and implemented. QA Level A1 drawings are reviewed by QA, the relevant safety committee chair, and the C-AD chair in addition to the reviews performed for QA Level A3 and A3 drawings.
    - ECNs are prepared for A1 drawings

1.8.2 Opportunities for Improvement

- The 2013 Assessment of OPM 13.4.1 Records Management reviewed QA records. There were no findings. It is recommended that future assessments of this OPM focus on other C-AD records.

1.8.3 Pre-Start Findings

- None

1.8.4 Post-Start Findings

- None

1.8.5 Noteworthy Practices

- None

1.9 IFM Work Planning and Control

1.9.1 Observations

- There exists a Memorandum of Understanding (MOU) and Operations Procedures Manual (OPM) section covering Work Planning and Control of the North Facility Complex of which the ERL falls within. The interaction between both groups is vital, especially with respect to management of credited controls that are required for ERL operations and maintained by F&O, or controls that have been established by C-AD for access etc. Examples would be the maintenance of the ERL Fan which is part of the credited controls for oxygen deficiency or implementation of radiation barriers that might prevent access to areas needed by F&O.
- Strong communication is a must and takes place via routine planning meetings; this includes establishment of roles to ensure work and work packages are reviewed and authorized.

- Memorandum of Understanding (MOU) regarding Accelerator Safety and Conduct of Operations Requirements for C-AD Accelerator Facilities by the F&O North Facility Complex team, September 10, 2010.
- C-A Operations Procedures Manual – 1.11.2 Accelerator Safety and Conduct of Operations, Configuration Control Requirements and Facility Modifications for C-AD Accelerator Facilities Managed by the Facilities & Operations (F&O) North Facility Complex team, or the F&O Modernization Project Office.

1.9.2 Opportunities for Improvement

- None

1.9.3 Pre-Start Findings

- None

1.9.4 Post-Start Findings

- None

1.9.5 Noteworthy Practices

- None

2.0 Accelerator Facility Safety

2.1 Configuration Management (CM) of Credited Controls

2.1.1 Observations

- The C-AD has processes and procedures to maintain configuration of safety credited and other accelerator equipment accelerators. Configuration Management – Shielding, Access-Control Systems, radiation monitors, ODH, shielding drawings, Access Control Systems Drawings and State Tables, Access Control System Testing Procedures were reviewed and found to be clear, reviewed, staff trained and knowledgeable about their use.
- Configuration management of radiation monitors was also reviewed; responsible SMEs were knowledgeable, documents were current.
- Procedures for conducting prompt radiation measurements (fault studies) were discussed with SMEs. These procedures are not clearly synchronized to assure proper coordination with the progress of commissioning activities, most prominently the planned increases in beam power.
- Due to past decisions and for what appear to be historical reasons the bulk shielding for the ERL was not designed in a coherent manner with a well-developed shielding assessment that was peer-reviewed.
- The present shielding is adequate for the initial stage of the commissioning plan. Additional shielding, analysis and verification is needed for high beam powers and may necessitate radiation measurements coordinated with fault studies at each "hold point" in the Commissioning Sequence, OPM 18.5.8.

- The present shielding analysis is largely the work of one individual using conservative methodologies not completely documented. A complete list of the shielding analyses performed to this point was not available.
- There is no clear plan for the management of local shielding on the beam line that might be needed as commissioning begins. As the beam power is increased, it is plausible that local shielding may be employed to control prompt radiation fields in proximity to the beamline to achieve shielding goals. This will potentially raise configuration management issues that should be anticipated and addressed in advance.

2.1.2 Opportunities for Improvement

- None

2.1.3 Pre-Start Findings

- Procedures and plans for conducting prompt radiation measurements (fault studies) should be reviewed and synchronized with Commissioning Sequence to assure proper coordination with the progress of commissioning activities, most prominently the planned increases in beam power and relevant fault study procedures.
- Update and/or develop appropriate Procedures for Shielding/Barrier Removal, Removal of Primary Area Beam Components, or Modifications, and ensure a clear plan for the management of local shielding is reviewed and implemented.

2.1.4 Post-Start Findings

- To assure availability of the shielding calculations to others for continuity of operations, the preparation of a comprehensive shielding assessment for the ERL should be prepared and made readily available.

2.1.5 Noteworthy Practices

- The system for managing the state tables was thorough.
- The system for referencing design drawings was thorough and straightforward to use.

2.2 Conduct of Operations

2.2.1 Observations

- The ERL program draws heavily on a well-established system of policies and procedures developed over many years for managing the conduct of operations at the other accelerator facilities operated by C-AD. This system has proven to be effective and has now been extended to cover the proposed ERL operations. The documentation supporting this system is extensive and appears to provide the procedures necessary to ensure safe operation of the new facility.
- In the course of interviewing various persons involved in the conduct of operations, the ARR team members noted some ambiguity about the lines of responsibility for day-to-day safe operation and whether management authority was adequately aligned with responsibility for safety. The persons interviewed all seemed to be comfortable with the organizational structure and R2A2's, but several persons seemed to be hesitant when asked how specific hypothetical questions of responsibility would be resolved.

The ARR team recommends that the ERL management should be attentive to the potential for problems that could arise from a lack of clear lines of responsibility. In particular, care should be taken to ensure that programmatic pressures do not lead to compromises in the high standards of conduct of operations. The team recognized the importance of the Operations Coordinator and felt that management must take care to ensure that this role is not diminished in the ERL organization.

2.2.2 Opportunities for Improvement

- None

2.2.3 Pre-Start Findings

- C-AD Management should ensure that lines of authority and responsibility for the conduct of operations of the ERL facility are clear. The authority of the Operations Coordinator must be clearly defined and established.

2.2.4 Post-Start Findings

- None

2.2.5 Noteworthy Practices

- None

2.3 Safety Review Committees

2.3.1 Observations

- The C-AD SAD lists review by a number of safety committees as Minimum Administrative Controls for Safe Operations. For ERL commissioning, these include C-AD's Accelerator Systems Safety Review Committee (ASSRC), and the C-AD's Radiation Safety Committee (RSC) for review and approve the changes.
- The Radiation Safety Committee (RSC) reviews radiological issues relevant to each accelerator start-up annually and reviews new or modifications to Access Control Systems (ACSs) and to shielding.
- The Accelerator Systems Safety Review Committee (ASSRC) completes a walkthrough of each accelerator facility before it starts up or moves on to different configurations or power levels. Checklists specify facility and equipment conditions that need to be met before starting up and need to be signed off by the subject matter expert. This inspection includes standard ESH housekeeping items such as, daisy chained extensions cords, removal of combustibles, trip hazards etc.
- BNL's institutional safety committees such as Pressure and Cryogenic Safety Subcommittee (PCSS) are relied upon for expertise outside the Department.
- The Radiation Safety Committee has reviewed the generic plans for the mitigation of radiation hazards, and general plans for fault studies for the commissioning of the ERL. However, the specific fault study plans for each fault study are reviewed and approved by the RSC once ERL has control of the beam at low power but prior to commissioning for the mission.
- RSC chair also is the lead SME designing the shielding and the planning for fault studies.

2.3.2 Opportunities for Improvement

- None

2.3.3 Pre-Start Findings

- Perform a review of shielding and faults studies by RSC and independent SMEs as per Commissioning Sequence, and Fault Study Procedure and plans.

2.3.4 Post-Start Findings

- None

2.3.5 Noteworthy Practices

- None

3.0 Facility Additions and Modifications

3.1 Safety Review for Accelerator Hardware (Controls)

3.1.1 Observations

- Instruments set up to detect prompt radiation, known as "Chipmunks", are recognized as critical to the safe commissioning and operation of the ERL facility. If radiation levels exceed specified thresholds the device either alarms or interlocks. The condition is indicated on computer screens in the ERL control room, but does not currently generate an audible alarm for the alarm condition. The interlock threshold turns the radiation off. The committee recommends that the potential hazard associated with a Chipmunk alarm justifies the implementation of an audible warning to ensure that the operator immediately recognizes the condition.
- The strategy for deployment of Chipmunks is documented, and the processes for changing their locations and/or alarm and interlock set points is proceduralized and well understood by staff.
- The Controls Group produced a list of action items that are still in progress. Several of these are necessary prior to Commissioning (e.g., ERL Laser Power Limit, Beam Loss Monitor Plots, etc.).
- C-AD is planning to correlate ERL power levels with Chipmunk response for two Chipmunks (NMO181 and NMO182) internal to the ERL enclosure so that the Chipmunks can be used as a type of power-limiting device. Additional local shielding around the chipmunk is planned to ensure the detectors do not saturate. as part of the commissioning sequence.

3.1.2 Opportunities for Improvement

- None

3.1.3 Pre-Start Findings

- An audible alarm in the ERL Control Room is needed to alert the Operators should a Chipmunk go into alarm.

- Complete installation and testing of controls that are required to support Commissioning (e.g., ERL Laser Power Limit, Loss Monitor Plots, etc.).

3.1.4 Post-Start Findings

- None

3.1.5 Noteworthy Practices

- The Controls Group recently issued an ERL Machine Protection Systems (MPS) Test Procedure (OPM 18.8.6.5). This test procedure will help ensure the MPS operates as intended to provide equipment protection and minimize machine down time.

4.0 Summary of Pre-Start and Post-Start Findings

TABLE 1: Summary of Pre-Start Findings

IDENTIFIER	REVIEW AREA	FINDING
Pre-Start 1*	Documentation & Procedure Safety Assessment Document (SAD)	Prior to exceeding 70 Watts of average beam power additional controls to mitigate radiological hazards related to the adequacy of ERL shielding and other systems for high-power operations need to be formally documented per C-AD procedures and implemented as per the Commissioning Sequence, OPM 18.5.8 and relevant RSC procedures in OPM Chapter.
Pre-Start 2	Commissioning Plan and Related Documents	The ERL Commissioning Sequence, OPM 18.5.8, which was in draft form at the time of the ARR, needs to be finalized, reviewed and approved by C-AD management.
Pre-Start 3	C-AD ESH Programs	Label process piping to/from the gas manifold adjacent to the dump.
Pre-Start 4	Configuration Management (Shielding)	Procedures and plans for conducting prompt radiation measurements (fault studies) should be reviewed and synchronized with Commissioning Sequence to assure proper coordination with the progress of commissioning activities, most prominently the planned increases in beam power and relevant fault study procedures.
Pre-Start 5	Configuration Management (Shielding)	Update, and/or develop appropriate Procedures for Shielding/Barrier Removal, Removal of Primary Area Beam Components, or Modifications, and ensure a clear plan for the management of local shielding is reviewed and implemented.
Pre-Start 6	Conduct of Operations	C-AD Management should ensure that lines of authority and responsibility for the conduct of operations of the ERL facility are clear. The authority of the Operations Coordinator must be clearly defined and established.
Pre-Start 7*	Safety Committee reviews	Perform a review of shielding and faults studies by RSC and independent SMEs as per Commissioning Sequence, and Fault Study Procedure and plans.
Pre-Start 8	Facility Safety Modification	An audible alarm in the ERL Control Room is needed should a Chipmunk go into alarm.
Pre-Start 9	Facility Safety Modification	Complete installation and testing of controls that are required to support Commissioning (e.g., ERL Laser Power Limit, Loss Monitor Plots, etc.).

* Completion of Pre-Start conditions 1 and 7 are not required for commissioning at average beam power of less than 70 Watts, but these conditions must also be completed, and their completion verified prior to commissioning at higher beam powers.

TABLE 2: Summary of Post-Start Findings

IDENTIFIER	REVIEW AREA	FINDING
Post-Start 1	Resolution of Past Action Items	Complete the remaining Post-Start Findings from the ERL IRR as currently planned and verify completion prior to commissioning for the mission begins
Post-Start 2	Configuration Management (Shielding)	To assure availability of the shielding calculations to others for continuity of operations, the preparation of a comprehensive shielding assessment for the ERL should be prepared and made readily available.

5.0 Charge to the Committee and the Committee Responses

Charge to Committee	Committee Response
Please perform an independent Accelerator Readiness Review of ERL gun and beam transport to the dump for high-current commissioning	Completed; please see the report
Please identify actions that are needed for a successful Phase II Accelerator Readiness Review of the complete ERL later in the year	A comprehensive shielding assessment should be performed and peer reviewed for successful Commissioning
	A report summarizing progress and the technical challenges encountered should be prepared and made available to the Phase II ARR committee
	Incorporate lessons learned from the phase 1 into the planning for phase 2

APPENDIX A: ARR TEAM CHARGE

Dear Sayed:

Thank you for agreeing to head the Accelerator Readiness Review for Phase I of ERL commissioning on July 29, 30 and 31, 2014. Based on your recent email, the team members will be Don Cossairt (FNAL), Ian Evans (SLAC) and Roger Erickson (SLAC). Please check if their schedules will work out. Additionally, Chuck Schaefer from BNL's ESH Directorate will join the team.

Phase I includes commissioning with high current beam from the gun to the dump, but does not include the complete ERL loop, which will be the subject of a Phase II ARR. You and your team's expertise and work is greatly appreciated and is needed to move this project forward. Below is the charge and some details about the BNL ARR process. A draft agenda and lines of inquiry for the on-site review are attached.

Pam Manning (631-344-4072) will be your contact for information regarding access to web based documents and other administrative matters. It is necessary for you to go to the BNL website: http://www.bnl.gov/guv/gis.asp and register on the Guest Information System at BNL for your visit here (please choose Collider-Accelerator Department as 'department to be assigned' and Ed Lessard as the 'host'). Also, please contact Pam regarding travel arrangements.

Thank you again for this effort.

Regards.

Ilan Ben-Zvi
C-AD Accelerator R&D Division Head
April 23, 2014

Charge:
• Please perform an independent Accelerator Readiness Review of ERL gun and beam transport to the dump for high-current commissioning
• Please identify actions that are needed for a successful Phase II Accelerator Readiness Review of the complete ERL later in the year

Please focus on the following areas:
• Areas identified in the Accelerator Safety Order (training, procedures, CAS, AB documents, USIs)
• Records of past reviews, incidents, actions
• Conduct of Operations procedures
• QA (assurance systems)
• Interlocking safety systems
• Controls system
• Conventional safety practices such as LOTO

The following summarizes focus areas and BNL counterparts:
SAD, ASE, USIs, Activities and Records
Counterparts: D. Kayran, E. Lessard

Past Actions and Reviews, Quality Assurance, Configuration Management, Documents and Records, CAS, Drawings
Counterpart: D. Passarello

Controls System
Counterparts: Charles Theisen, J. Jamilkowski

Conduct of Operations, Commissioning Plan, Commissioning Sequence, Fault Studies
Counterparts: L. Hammons, D. Kayran

Alarming and Interlocking Area Radiation Monitors
Counterparts: D. Beavis, J. Reich

Radiation Protection and Safety, Ozone, Hydrogen, Fault Study Plan
Counterparts: D. Beavis, P. Bergh, R. Karol

Conventional Safety, ODH, Lasers, LOTO
Counterpart: P. Cirnigliaro, L. Hammons

Personal Protection Systems: Interlocks for ACS, ODH, Laser
Counterparts: J. Reich, A. Etkin

The review process should consider:
- Lines of Inquiry
- Document reviews
- Counterpart discussions
- Observations

Please report the following action items:
Pre-Start – actions that should be addressed prior to the Phase I approval by DOE
Post-Start – actions that may be completed after Phase I approval; the ARR team should recommend that these actions be identified to the ERL management, and that management's plan and schedule for completing the actions be provided to and discussed with the Accelerator Readiness Review team
Opportunities for Improvement – actions that the ARR team believe would significantly enhance the Phase II Accelerator Readiness Review process

Please prepare a report as follows:
Contents
- Brief discussion of the Findings and Observations within each area of the ARR
- Brief comments on opportunities for improvement
- Pre-start and post-start action items and opportunities for improvement

Schedule
- Please prepare a draft report drafted within 7 to 11 days following the on-site work
- Please submit the draft to counterparts for factual accuracy and comments
- Please submit the final report to C-AD management within approximately one week after comments received

APPENDIX B: ARR TEAM MEMBERS

Sayed Rokni
Team Lead

25 years at SLAC National Accelerator Laboratory. Ph.D. in Nuclear Physics from Utah State University, and a Certified Health Physicist. Current Position: Radiation Protection Department Manager, Radiation Safety Officer, Radiation Physics Group Leader, 2001–present. Prior Positions: Acting Director for ESH Division, 2005-2007; Radiation Physicist, 1991-present; Engineering Physicist, Research Division, 1989-1991; Faculty Research Associate, Nuclear Physics Group, University of Massachusetts, Amherst, 1987-1989.

J. Donald Cossairt

36 years at Fermi National Accelerator Laboratory. Ph.D. in Physics from Indiana University Bloomington, and a Certified Health Physicist. Current Position: Associate Head, ESH&Q Section 1996-present. Previously: Radiation Protection Manager 1996-present, ES&H Section Head, 1989-1996. Widely known as an instructor in accelerator radiation protection at sessions of the U. S. Particle Accelerator School. Distinguished Emeritus Member of the National Council on Radiation Protection and Measurements.

Roger Erickson

34 years at SLAC National Accelerator Laboratory. Ph.D. in Experimental High Energy Physics from Cornell University. Current Position: Director of Accelerator Operations and Safety Division. Prior Positions: Deputy System Leader of SLC Final Focus System; Project Manager of A-Line 50 GeV Upgrade Project.

Ian Evans

Over 25 years of technical and management experience, primarily in the areas of operational and experimental safety at accelerator based DOE user facilities. Current Position: Directorate ESH Program Manager for the Linac Coherent Light Source (LCLS) and Stanford Synchrotron Radiation Light source (SSRL). Responsibilities include development, implementation and oversight of staff and user based ESH and Work Planning and Control programs.

Chuck Schaefer

20 years at Brookhaven National Laboratory (BNL). M.S. in Health Physics from the University of Florida, and a Certified Health Physicist. Current Position: Accelerator Safety Officer and BNL Radiological Waste Characterization Analyst, Radiological Control Division. Prior Positions: BNL Radiological Control Manager 2003-2008, Facility Support Manager 2001-2003, BNL Radiological Field Supervisor 1995-2001.

Jessica Wilke

20 years at Brookhaven National Laboratory (BNL). MBA in Business Information Systems Management, Hofstra University. Certified Quality Manager, Quality Engineer, Quality Auditor, Six Sigma Green Belt (ASQ). Current Position: Deputy Manager Quality Management Office, Contractor Assurance System POC. Prior Position: Quality Program Engineer 1994-2013. Responsibilities have included Verification of the BNL QA Program, development of assessment and performance processes, leader of the Human Performance Improvement initiative, causal analysis team lead. Experienced facilitator.

APPENDIX C: PLAN OF ACTION

ERL ARR TEAM
PLAN OF ACTION

COLLIDER-ACCELERATOR DEPARTMENT
ERL GUN TO DUMP COMMISSIONING

OBJECTIVE/SCOPE

The objective of this Accelerator Readiness Review (ARR) is to ensure that commissioning of the ERL superconducting RF gun to the beam dump can be performed in a safe and environmentally responsible manner. The scope of this ARR includes all activities associated with ERL commissioning of the 3.5 MeV beam from the gun to the dump at the Building 912 ERL accelerator enclosure.

The supporting policies and procedures will be among the deliverables to the ARR team.

This plan of action was developed with the ARR Team and is required prior to commissioning and operations of new accelerators, and is a BNL prerequisite to conducting the ARR.

The ARR is a process for ensuring that facility conditions and operations with the potential to affect worker or public safety and health, or to have a negative impact on the environment, have been evaluated, and the appropriate safeguards established. This plan guides the ARR process to be conducted in accordance with DOE Order 420.2C using an approach consistent with the draft DOE Guide 420.2–1A (August 2013) and the BNL Standards Based Management System (SBMS) Accelerator Safety Subject Area. In accordance with DOE Order 420.2C, the ARR ensures the following processes are in place:

1. An appropriate Contractor Assurance System that maintains an internal assessment/review program
2. An appropriate Facility Configuration Management Program that is related to accelerator safety
3. Credited Controls and appropriate administrative processes related to accelerator safety (e.g. training, procedures, etc.)

Additionally, consistent with the DOE Guide 420.2–1 and draft DOE Guide 420.2–1A, the ARR should verify:

1. An acceptable Safety Assessment Document (SAD) has been properly developed in accordance with DOE O 420.2C requirements, and has been reviewed and approved in accordance with the BNL internal safety review system
2. An adequate Accelerator Safety Envelope (ASE) has been developed, is supported by the SAD, and approved in accordance with BNL and Brookhaven DOE Site Office (BHSO) requirements

3. The facility to be commissioned is in compliance with ASE requirements
4. An appropriate Commissioning Plan has been developed
5. An appropriate Unreviewed Safety Issue (USI) process has been developed and is being utilized
6. Procedures necessary for the safe operation of the facility have been developed, reviewed, and approved, and an appropriate process for the development, review and approval of new and revised procedures is in place
7. Procedures to deal with abnormal and emergency situations have been prepared and are approved for use
8. Records important for commissioning activities are properly controlled
9. Equipment and systems having safety importance, as described in the SAD, have been installed and have been appropriately tested
10. Personnel training and qualification programs relevant to safe commissioning have been established
11. Clearly defined roles and responsibilities have been established for accelerator commissioning activities, including those for training and procedures related to safety
12. An appropriate assurance process for the review of the accelerator safety program elements as specified in the CRD of DOE Order 420.2C is in place

The ARR is not an extensive wall–to–wall assessment of all aspects of commissioning, but a performance based assessment of the proposed commissioning activities designed to ensure the facility will be commissioned in a safe, secure, and environmentally sound manner. Weaknesses identified as part of the ARR process should become part of an overall lessons learned program.

ERL ARR TEAM MEMBERS AND TOPICAL AREAS

NAME	AFFILIATION AND CONTACT INFORMATION	TOPICAL AREA
Sayed Rokni (Team Lead)	Email: rokni@slac.stanford.edu	**SAD, ASE, USIs, , Configuration Management,**
Roger Erickson	Email: roger@slac.stanford.edu	Conduct of Operations, Commissioning Plan, Commissioning Sequence, Controls Systems
Don Cossairt	Email: cossairt@fnal.gov	**Radiation Protection and Safety, Ozone, Fault Study Plan, Configuration Management.**
Chuck Schaefer	Email: schaefer@bnl.gov	Alarming and Interlocking Area Radiation Monitors, Controls Systems
Ian Evans	Email: evans@slac.stanford.edu	**Conventional Safety, ODH Lasers, Loto, Work Planning and Control, C-AD ESH Programs**
Jessie Wilke	Email: jessie@bnl.gov	Past Actions and Reviews, CAS, Quality Assurance, Documents and Records,

A DOE Site Office (BHSO) representative will observe and provide DOE oversight of this ARR.

- Patrick Sullivan, DOE BHSO Observer [ptsullivan@bnl.gov, (631) 344–4092]

C-AD Administrative support for the ARR team:

- Pamela Manning, [pmanning@bnl.gov, (631) 344–4072]

APPENDIX D: LINES OF INQUIRY

1.0 Documents and Procedures, Program for Operations	
1.1 Safety Assessment Document (SAD)	
1. Interview selected management /staff involved in SAD development	Adequate
2. Determine adequacy of safety analysis performed to support SAD	Adequate
3. Determine if SAD meets DOE O 420.2C requirements	Adequate
4. Determine if SAD provides adequate technical basis for ASE	Pre-Start 1
5. Determine adequacy of process to review and approve SAD	Adequate
6. Interview selected management /staff to determine knowledge of SAD requirements	Adequate
7. Determine adequacy of SAD to support commissioning	Adequate
1.2 Accelerator Safety Envelope (ASE)	
1. Interview selected management/staff involved in ASE preparation	Adequate
2. Determine if ASE addresses required controls and operating limits	Adequate
3. Determine if ASE meets DOE O 420.2C requirements	Adequate
4. Determine adequacy of process to review and approve ASE	Adequate
5. Interview selected management/operational staff	Adequate
6. Determine adequacy of ASE to support commissioning	Adequate
1.3 Unreviewed Safety Issue (USI) Process	
1. Determine if USI process meets DOE O 420.2C requirements	Adequate
2. Determine if USI process is consistent with commissioning SAD	Adequate
3. Interview those involved in USI process development and management	Adequate
4. Determine if USI process will be adequately linked to Configuration Management program	Adequate
5. Determine adequacy of USI process to support commissioning	Adequate
1.4 Resolution of Past Action Items	
1. For open items, ensure that planned closure actions are appropriate and responsive to the findings	Not reviewed
2. Determine if the processes are implemented or whether there is a credible, resource-loaded plan for implementation	Not reviewed
3. Determine adequacy of resolutions of past items to support commissioning	Post-Start 1
1.5 Commissioning Plan and Related Documents	
1. Commissioning Plan fully describes roles, responsibilities, accountabilities, and authorities that establish the expectations and duties of managers, supervisors, and operators for carrying out the commissioning and any related documented authorizations	Adequate
2. 2. Commissioning Plan addresses staffing schedules, authority and reporting chain for operational, safety, and scheduling issues procedures (normal and emergency/contingency), administrative controls, and personnel training	Adequate *
3. 3. Commissioning Plan identifies or properly references engineered safety systems that will be operable for the accelerator	Pre-Starts 4,5
4. 4. Commissioning Plan identifies the operational characteristics for specific modes of commissioning needed to support the safety case for	Pre-Start 4

progressively higher power commissioning	
5. 5. Determine adequacy of Commissioning Plan and fault studies to support commissioning	Pre-Starts 4,5,6
1.6 C-AD ESH Programs and ERL Functional Organization	
1. Determine if the ERL organization is developed that supports all functions necessary to support commissioning	Adequate
2. Determine if the C-AD organization includes committees that have a functional role in ERL processes	Adequate
3. Determine if charters, chairs, and members for all committees that have a role in ERL commissioning are in place	Adequate
4. Determine if policies and procedures are in place to ensure committees and their charters and charges are appropriately aligned.	Adequate
5. Determine that the ERL organization is consistent with commissioning SAD and ASE	Adequate
6. Determine if an ES&H organization is in place with fully qualified staff and appropriate R2A2s to support commissioning	Adequate
7. Determine if all procedures needed to effectively support commissioning are in place including implementation of the following SBMS requirements: **a.** Worker Safety & Health **b.** Conventional Health and Safety **c.** Radiological Protection and Control **d.** Environmental **e.** Waste Management **f.** Emergency Preparedness and Response **g.** Security (including Cybersecurity).	Adequate for areas reviewed (SBMS, RADCON, Acc Systems Safety Review Committee)
8. Interview C-AD Chair, C-AD ESSHQ Associate Chair, C-AD ESSHQ Division Head and selected C-AD ESSHQ staff	Adequate
9. Determine if a C-AD ES&H program is in place to support cryogenic operations	Adequate
10. Determine if R2A2s developed for ESSHQ staff are aligned with the ERL organization	Adequate
11. Determine adequacy of C-AD ESSHQ organization to support commissioning	Adequate
1.7 Document and Record Control	
1. Determine if key records are identified	Adequate
2. Determine if Records Custodians for key records are identified and interviewed	Adequate
3. Interview records custodians	Adequate
4. Determine if records management and storage complies with all applicable requirements	Adequate
5. Determine if records management program effectively supports routine operation	Adequate
6. Determine if records related to credited controls in the C-AD document control system are readily available?	Adequate
7. Determine if staff can access records they need for commissioning	Not Reviewed
8. Ensure records management is consistent with commissioning ASE	Not Reviewed

1.8 Assurance System	
1. Determine if a process is in place for comprehensively assessing ERL commissioning performance against goals, monitoring and analyzing performance data and information, and identifying and correcting unfavorable trends or deviations	Adequate
2. Determine if external assessments are planned, used and employ peer reviews and assessments that include accelerator subject matter experts from other accelerator facilities	Pre-Start 5
3. Determine if the performance management system includes a process for investigation and analysis of events and incidents and their associated causes.	Adequate
4. Ensure the assurance process meets the requirement of DOE O 420.2C requirements and SBMS and is consistent with the commissioning SAD	Adequate
5. Determine if the assurance programs are adequate to support commissioning	Adequate
1.9 IFM Work Planning and Control	
1. Determine if an Integrated Facility Management (IFM) model to support the C-AD facility complex during ERL commissioning is effectively deployed	Adequate
2. Interview selected management/staff on their role in the Integrated Facility Management system	Adequate
3. Determine adequacy of work planning on conventional facilities associated with ERL	Adequate

2.0 Accelerator Facility Safety	
2.1a Maintenance of Credited Controls (CCs) and Safety System and Components (SSCs)	
1. Determine if there is a process to manage the maintenance of CCs and SSCs	Adequate
2. Determine if the processes for maintaining CCs (radiation monitors, shielding, and the ACS) and SSCs (e.g. fire detection and suppression systems) for accelerator are clearly defined and documented, including process change control	Adequate
3. Determine if responsibilities for process execution are clearly and formally assigned in R2A2s and/or organizational procedures	Adequate
4. Determine if procedures are in place for removing and placing CCs and SSCs back in service	Adequate
5. Determine if approved alternatives to CCs have been defined	Adequate
6. Determine if program meets the requirements of DOE 420.2C and the draft AS Guide	Adequate
7. Determine if the program is fully implemented	Post-Start 2
8. Determine adequacy of the maintenance program for CCs and SSCs to support commissioning	Adequate
2.1b Configuration Management (CM) of Credited Controls	
1. Determine if the configuration of ASE required controls (credited controls	Adequate

and supports) will be properly managed during accelerator commissioning	
2. Evaluate effectiveness of configuration management program	Adequate
3. Determine if the accelerator credited control systems are protected against un-authorized access	Adequate
4. Determine if configuration management is applied to defense-in-depth controls on a graded approach	Pre-Start 3
5. Determine if the configuration management program is adequate to support commissioning	Adequate
2.2 Conduct of Operations	
1. Interview C-AD and ERL management and staff involved in the development and implementation of the Conduct of Operations program	Adequate
2. Review Conduct of Operations procedures to determine overall adequacy of program	Adequate
3. Determine if Conduct of Operations program is adequately implemented at the ERL	Adequate
3.1 Are the proposed performance criteria in place to satisfy the required guidelines for the following: 3.2 Commissioning Organization and Administration 3.3 Operating Practices 3.4 Control Area Activities 3.5 Communications 3.6 Control of On-Shift Training 3.7 Notifications 3.8 Control of Equipment and System Status 3.9 Log keeping 3.10 Operations Turnover 3.11 Required Reading 3.12 Timely Orders to Operators 3.13 Operations Procedures 3.14 Work Planning and Controls	Adequate *
4. Interview staff at ERL to assess knowledge of and implementation of the Conduct of Operations program	Adequate
5. Review sample copies of R2A2s and JTAs for ERL Operators	Adequate
6. Determine if a staffing plan for commissioning has been established	Adequate
7. Determine if a commissioning organization has been established consistent with the organization described in the Conduct Operations Matrix	Not Reviewed.
8. Determine appropriate procedures are in place to address industrial safety concerns	Pre-Start 3
9. Determine adequacy of the Conduct of Operations program to support commissioning	Adequate
2.3 Safety Review Committees	
1. Determine if a safety review program is prepared, approved and implemented	Pre-Start 6
2. Determine if applicable procedures are in place for C-AD safety committees	Adequate

3. What staff qualifications are required to manage and implement the safety review committee program	Adequate
4. Interview C-AD managers and staff to determine their knowledge of the requirements of the safety review program	Adequate
5. Determine adequacy of safety review committees to support commissioning	Pre-Start 6

* This determination of adequacy is based on a limited sampling of information and on recognition that the C-AD organization has well-established policies and procedures for controlling operations of the AGS and RHIC programs. The ARR committee assumed the same level of rigor will be applied to the ERL program.

3.0 Facility Additions and Modifications	
3.1 Safety Review for Accelerator Hardware	
1. Determine if a process is established by C-AD for safety oversight and review for modifications to the ERL	Adequate
2. Determine if the process is consistent with SAD/ASE requirements	Adequate
3. Determine if supporting documents and procedures are in place to implement the process	Adequate
4. Determine if the process is adequately linked to USI process	Adequate
5. Determine if the process meets DOE O 420.2C requirements and is consistent with the Accelerator Safety Guide	Adequate
6. Interview selected management/staff to determine knowledge of accelerator safety review process requirements for accelerators	Adequate
7. Determine if a process is established by C-AD to perform pre-operational acceptance testing of hardware, including procedure development and implementation of required training	Pre-starts 7, 8
8. Determine if guidelines are in place for deciding on the appropriate level of review	Adequate

Collider Accelerator Department

Building 911
P.O. Box 5000
Upton, NY 11973-5000

BROOKHAVEN NATIONAL LABORATORY

managed by Brookhaven Science Associates
for the U.S. Department of Energy

Memo

Date: December 5, 2014

To: Distribution

From: Jack Eng

Subject: QA Report - Verification of Conformance to Requirements for ERL Low Power Test Operation
(QA Assessment 2014 - 367)

I. Scope/Objectives:

As an assurance method to be utilized to monitor and track the ERL Low Power Test operation, this assessment evaluates supporting documentation and verifies that the following requirements are being met (see Attachment #7):

1. Review all ERL RSC checklists to ensure the appropriate signatures were obtained each time ERL was set for operations.
2. Review the ERL Logbook to ensure that beam power parameters were logged daily as required and were within specified parameters.
3. Ensure that each test at ERL was reviewed by ASSRC, ESRC or RSC before the start of each run with beam or attempted run with beam.
4. Ensure at least one ERL person was in the ERL control room during all beam operations.
5. Ensure that the ERL configuration has been reviewed by the ASSRC within the last year.
6. Ensure the ERL shift leader completed qualifications of all personnel responsible for implementing the sweep procedure.
7. Ensure the ERL shift leader re-signed the RSC checklist if more than 7-days elapsed between tests/attempted tests.

The above requirements, which are the criteria for this assessment, can be found in the operational procedure C-A-OPM 2.5.6, Commissioning Accelerator Safety Envelope (CASE) Credited Controls and Support for ERL Low Power Testing.

II. Results of Assessment:

The assessment was conducted on 12/03/2014; it included a walk-through of C-AD Main Control Room and ERL Control Room. Dmitry Kayran, the project leader and a shift leader, was interviewed.

RSC and ASSRC Check-Off Lists were located in C-AD Main Control Room. ERL Sweep Procedure and Check-Off List were located in ERL Control Room.

1. Review all ERL RSC checklists to ensure the appropriate signatures were obtained each time ERL was set for operations.
   Finding: All appropriate signatures were obtained for all ERL RSC Check-off Lists for Low Power Beam Testing of the ERL SRF electron gun:
   - The first radiation checklist dated 4/13/2014 and the change control form dated 5/27/2014 were cancelled on 7/3/2014 (see Attachment #1).
   - The second radiation checklist dated 10/29/2014 and the change control forms dated 11/18/2014 and 11/14/2014 were reviewed and signed (see Attachment #2).

   Opportunity for Improvement: The change control forms signed by Operations Coordinator did not have the 'Time' & 'Date' filled out (see Attachment #2, highlighted in yellow).

2. Review the ERL Logbook to ensure that beam power parameters were logged daily as required and were within specified parameters.
   Finding: Four individual runs were conducted: 5/28/2014, 11/17/2014, 11/18/2014 & 11/20/2014 (see Attachment #3). The details of each run were recorded in the electronic log (e-log) in ERL Control Room; readily accessible from authorized computers. The runs on 11/17/2014 & 11/18/2014 were successful (see Attachment #4). All measurements fell within the specified parameters:
   - Electronic kinetic energy for the SRF gun: < 3.5MeV
   - Electronic beam power leaving the ERL SRF gun or the 5-cell cavity: < 70W averaged over 1-hour
   - Electronic kinetic energy to the dump: < 25MeV

   Opportunity for Improvement: In the e-log, consideration should be given to putting the specified parameters side by side with actual measurements for purpose of comparison **(**e.g. Electronic kinetic energy for the SRF gun < 3.5MeV: Actual: 1.3MeV).

3. Ensure that each test at ERL was reviewed by ASSRC, ESRC or RSC before the start of each run with beam or attempted run with beam.
   Finding: Each test at ERL was reviewed by ASSRC or RSC before the start of each run or attempted run with beam:
   - C-A Accelerator Systems Safety Review Committee Check-off List was reviewed on 4/25/2014. A walkthrough of ERL Test Setup for Stage 1 Low Power Gun Testing was conducted on 4/24/2014. Another walkthrough was conducted on 5/27/2014 before the 5/28/2014 test run (see Attachment #5).
   - The first radiation checklist dated 4/13/2014 and the change control form dated 5/27/2014 were cancelled on 7/3/2014 (see Attachment #1).
   - The second radiation checklist dated 10/29/2014 and the change control forms dated 11/18/2014 and 11/14/2014 were reviewed and signed (see Attachment #2).

   Opportunity for Improvement: In the Title column of CK-05, 'ISTS' was changed to 'ACG'. Changes should not be made without initial and date (see Attachment #5, highlighted in yellow).

4. Ensure at least one ERL person was in the ERL control room during all beam operations.
   Finding: Four individual runs were conducted. Each run had at least one ERL person in ERL Control Room during beam operation (see Attachment #3).
   Opportunity for Improvement: In the e-log, consideration should be given to changing "Author1 & Author2" to "Operator & Other Person" to be consistent with the terms used in Section 5.6.1 of C-A-OPM 2.5.6 (see Attachment #3, highlighted in yellow).

5. Ensure that the ERL configuration has been reviewed by the ASSRC within the last year.
   Finding: C-A Accelerator Systems Safety Review Committee Check-off List was reviewed on 4/25/2014. A walkthrough of ERL Test Setup for Stage 1 Low Power Gun Testing was conducted on 4/24/2014. Another walkthrough was conducted on 5/27/2014 before the 5/28/2014 test run (see Attachment #5). Walkthroughs are performed each time a test configuration has been changed.

6. Ensure the ERL shift leader completed qualifications of all personnel responsible for implementing the sweep procedure.
   Finding: Dmitry Kayran completed qualifications of all personnel responsible for performing sweeps by observing their performance in executing the Sweep procedure. JTA records showed that Dmitry Kayran, Vadim Ptitsyn, Thomas Seda, Robert Kellermann and Lee Hammons are trained for implementing the sweep procedure (see Attachment #6). The Sweep Checklists showed that two trained persons (TL & Op2) performed the sweep and a third person (Op3) performed 'Static Watch'.

7. Ensure the ERL shift leader re-signed the RSC checklist if more than 7-days elapsed between tests/attempted tests.
   Finding: RSC Check-off List Change Control Forms dated 11/18/2014 & 11/14/2014 were reviewed and approved. The second RSC checklist was re-signed by Dmitry Kayran on 12/3/2014 (see Attachment 2).

III. Conclusions:

The supporting documentation was readily retrievable. There was no major or minor nonconformance. There were four Opportunities for Improvement (OFI):

OFI #1: The change control forms signed by Operations Coordinator did not have the 'Time' & 'Date' filled out.

OFI #2: In the e-log, consideration should be given to putting the specified parameters side by side with actual measurements for purpose of comparison **(**e.g. Electronic kinetic energy for the SRF gun < 3.5MeV: Actual: 1.3MeV).

OFI #3: In the Title column of CK-05, 'ISTS' was changed to 'ACG'. Changes should not be made without initial and date.

OFI #4: In the e-log, consideration should be given to changing "Author1 & Author2" to "Operator & Other Person" to be consistent with the terms used in Section 5.6.1 of C-A-OPM 2.5.6.

IV. Definitions:

- **Finding -** Results of the evaluation of the collected audit evidence compared with the agreed audit criteria. Audit findings provide the basis for the audit report. While all findings of nonconformity must be documented, findings of conformity may be documented if within the agreed upon audit scope.

- **Major Nonconformance -** A lack of an element, procedure, or a non-fulfilled requirement that puts the process/system at jeopardy, and could lead to significant impact on quality, environment, ES&H, operations, or reliability.

- **Minor Nonconformance -** An observed lapse in a program, process, procedure, or requirement, usually single incidents, that do not have a significant impact on the quality, environment, ES&H, operations, or reliability.

- **Opportunity for Improvement -** A suggested means of improving an activity or fulfilling the intent of a requirement.

ATTACHMENT #1

RSC Check-off List Change Control Form (CCF)

Check-off List Title: ERI check-off list for Low Power Beam Testing

Initiator: Dana Beavis **Date:** 5/27/14

Notes: (1) The RSC Chair shall approve any changes to completed, active, check-off lists, and designate other approvals, personnel to be informed of the change, and the individual selected to verify that the change is implemented. He shall also document any beam limitations as a result of the change.

(2)The MCR shall coordinate these approvals, and disseminate information to designated personnel prior to implementing the change and modifying operations to the affected area as described below.

Description of Change
(include original checklist item number(s), if applicable) **Verified by/date/time**

Add New Requirement To be completed before beam is allowed.

BP (LE) 1ST halo Scrapper RS LOTOed open.

Concled 7/3/14 DB

Change Approved: Dana Beavis 5/27/14
RSC Chair Date

Other Approvals (as determined by the RSC Chair):

NONE

Personnel to be informed of Change(as determined by the RSC Chair):

NONE

RSC Checklist Change Implemented:

David Muffler 11:15 5/27/14
Operations Coordinator Time Date

[1]Place in RSC Check-off List Binder at the front of the affected check-off list.

C-A-OPM-ATT 9.1.2.b 2 Revision 03
April 12, 2010

Prepared by: Wencan Xu

Date: April 13, 2014

Reviewed by: Tama Beavis

Date: 5/9/14

Approved by: Ivan Roser

T. Roser

Date: 5/12/14

Cancel 7/3/14 DB

ERL RSC Check-Off List for Low Power Beam Testing of the ERL SRF electron gun

Completion of this ERL RSC Check-Off List is a prerequisite for beam testing.

Upon completion of this check-off list in the MCR, the ERL cold emission testing (CET) of the SRF electron gun may commence.

1.	DK (LP)	**RSC LOTO has been applied to prevent the 1 MW klystron from being energized. This or equivalent must remain in place until the check-off list is complete.**
2.	DK (LP)	RSC LOTO has been applied to prevent excitation of five-cell cavity.
3.	DK (LP)	C-AD OPM 2.5.6 must be followed for the low power test.
4.	DK (LP)	Sweep procedure in place for the blockhouse and west area.
5.	AC (IG)	Chipmunk operation verified.
6.	AC (IG)	Chipmunk alarm and interlock levels checked against table below.
7.	JBP (LE)	ERL block house shielding and barriers inspected and acceptable low power beam operations
8.	JBP (LE)	ERL block house shielding prints approved.
9.	JBP (LE)	Barriers are in place at both ends of the trench and posted.
10.	JBP (LE)	The ladder at the power supply house has a locked barrier and is posted.
11.	JBP (LE)	Access panel on side of electronic room is locked closed.

Page 1 of 4

12. ___ (RCD) Second floor access panel posted with "HP escort required when ERL is operating. Contact ERL control room at ext 3135 for operating status"

13. ___ (RCD) Post area between West wall of the ERL and building wall as "HP escort required when ERL is operating. Contact ERL control room at ext 3135 for operating status"

14.

15. ___ (ACG) Chipmunks required for CET have interlock function checked. (See attached list).

16. ___ (ACG) PASS test is complete for ERL.

17. ___ (ACG) State Tables approved for ERL beam operations.

18. ___ (ACG) PASS wiring prints approved.

19. ___ (ACG) PASS software under configuration management.

20. ___ (RCD) Entrance gates to Building 912 NEEBA as "Controlled Area. TLD required for entry.

21. ___ (RCD) East side support building, first and second floors posted "HP escort required when ERL is operating. Contact ERL control room at ext 3135 for operating status"

22. ___ (LE) Area surrounding ERL is posted as no ladders no climbing.

23. ___ (LE) First dipole after gun is RS LOTOed off.

24. ___ (ACG) All bypasses or temporary jumpers in place have been discussed with RSCC.

25. ___ (ACG) ODH interlocks certified.

26. ___ (RSCC) Chipmunk response reviewed for low power test.

27. ___ (RSCC) ERL shielding has been examined and found acceptable.

28. ___ (RSCC) Building roof requirements given to LE and RCD.

29. ___ (RSCC) Radiation survey precautions discussed with RCD. Not Signed DB 5/27/14

30. ___ (RSCC) Chipmunk response for low power tests acceptable. procedure, DB 5/23/14

31. ___ (RSCC) Seam analysis and penetration updates provided to RSC for low power test.

Comp'd 7/31/14 DB

note: As of 16:47 This is complete DB 5/27/14

Page 2 of 4

32. KOB (RCD) Building roof over ERL posted " No access to this area of roof when ERL is operating. Contact ERL control room at ext. 3135 for operating status".

33. JS (CEE) Conditions from review of Laser and ICT for beam intensity completed, as per review memo.

34. DK (LP) Blockhouse and west fenced areas have been verified as swept.

35. DK (LP) Five-cell Cavity RS LOTOed off.

36. DK (LP) A procedure provides operators instruction for responding to ICT interlocks.

37. DK (LP) Access procedure for locked west area to ensure any accesses do not leave the area unlocked without requiring a sweep of ERL.

38. DK (LP) LP will notify R. Karol or E. Lessard when beam operations begin.

39. DM (LP) ERL ready for low power test.

40. DMM (OC) List completion verified by on-duty operations coordinator.

Come to a 7/3/14 D. Beavis

When the list above is complete then the ERL SRF electron gun may begin operations with beam.

The on-duty RCT needs to be in the area to conduct surveys of the shielding and penetrations. After the surveys have been reviewed, the configuration of the area posting near the ERL block house will be determined. A detailed survey will be conducted and documented after stable operations of the gun at 1W are achieved.

RCD	Radiological Control Division: P. Bergh or designee x 4466
LE	Liaison Engineer: D. Phillips or designee x 4471
LP	Liaison Physicist: D. Kayran or designee x 5136
MCRGL	MCR Group Leader: P. Ingrassia or designee x 7272
RSCC	Radiation Safety Committee Chairperson: D. Beavis or designee x 7124
OC	Operations Coordinator x 4662
ACG	Access Control Group: J. Reich or designee
RCT	Radiation Control Technician
IG	Instrumentation Group: M. Minty or designee
CEE	Chief Electrical Engineer: J. Sandberg or designee x 4312
RGDC	C-AD RGD Custodian: A. Etkin or designee

Page 3 of 4

CHIPMUNKS

Name	Location	Interlock [mrem/hr]	Alarm [mrem/hr]	
NMO170	North Labyrinth	~~25~~ 20	10	DB 5/22
NMO171	North Gate	25 ~~25~~	1 ~~10~~	DB 5/22
NMO172	1 MW Waveguide port	2.5	1	
NMO173	50 kW Waveguide area	2.5	1	
NMO174	West cryo pipe exit	2.5	1	
NMO175	South Gate	2.5	1	DB 5/22
NMO176	South Labyrinth	50 ~~25~~	20 ~~1~~	
NMO177	Internal to ERL1	-	-	
NMO178	Internal to ERL 2	-	-	
NMO181	Gun power limit	20	16	
NMO182	Power limit gun and dump	20	16	

Page 4 of 4

ATTACHMENT #2

RSC Check-off List Change Control Form (CCF)

Check-off List Title: ERL check off list for Low Power Testing

Initiator: Dana Beavis **Date:** 11/18/14

Notes: (1) The RSC Chair shall approve any changes to completed, active, check-off lists, and designate other approvals, personnel to be informed of the change, and the individual selected to verify that the change is implemented. He shall also document any beam limitations as a result of the change.

(2)The MCR shall coordinate these approvals, and disseminate information to designated personnel prior to implementing the change and modifying operations to the affected area as described below.

Description of Change
(include original checklist item number(s), if applicable) **Verified by/date/time**

① After The 2nd dipole has been RS LoTo off by either The L.P. or L.E. Then The 1ST Dipole can be unLocked for beam in 1ST band & FaulT Studies

DK (LP or LE) 2nd Dipole RS LoToed off

Then

DBP (LE) 1ST Dipole unLocked & LoTo removed.

DBP (LE) SLiTs Before 1ST Dipole unLocked & cable connected

Change Approved: Dana Beavis 11/18/14
RSC Chair Date

Other Approvals (as determined by the RSC Chair):

Personnel to be informed of Change(as determined by the RSC Chair):

- Dmitry Kayran - LP
- Dave Phillips - LE

RSC Checklist Change Implemented:

Operations Coordinator Time Date

[1]Place in RSC Check-off List Binder at the front of the affected check-off list.

RSC Check-off List Change Control Form (CCF)

Check-off List Title: ERL RSC check off list for Low power Beam Testing of the ERL SRF Electron gun

Initiator: Dmitry Kayran **Date:** 11-14-2014

Notes: (1) The RSC Chair shall approve any changes to completed, active, check-off lists, and designate other approvals, personnel to be informed of the change, and the individual selected to verify that the change is implemented. He shall also document any beam limitations as a result of the change.

(2)The MCR shall coordinate these approvals, and disseminate information to designated personnel prior to implementing the change and modifying operations to the affected area as described below.

Description of Change
(include original checklist item number(s), if applicable) **Verified by/date/time**

add to Item 2 RSLOTO ~~floor~~ loadbar to gun,
add. This must remain in place until the check-off list is complete.

Change Approved: Peter Ehrlich 11-14-2014
RSC Chair Date

Other Approvals (as determined by the RSC Chair):
NA

Personnel to be informed of Change(as determined by the RSC Chair):
NA

RSC Checklist Change Implemented:
Tom Butler 15:30 11/14/14
Operations Coordinator Time Date

[1]Place in RSC Check-off List Binder at the front of the affected check-off list.

RSC Check-off List Change Control Form (CCF)

Check-off List Title: ERL RSC Check-Off list for Low Power Beam Testing of the ERL SRF Electron gun.

Initiator: Paul Bergh Date: 11-14-14

Notes: (1) The RSC Chair shall approve any changes to completed, active, check-off lists, and designate other approvals, personnel to be informed of the change, and the individual selected to verify that the change is implemented. He shall also document any beam limitations as a result of the change.

(2)The MCR shall coordinate these approvals, and disseminate information to designated personnel prior to implementing the change and modifying operations to the affected area as described below.

Description of Change
(include original checklist item number(s), if applicable) Verified by/date/time

Original Check list reads: #13 Access panel posted.
Change to: Access panel locked and posted as HP escort and survey required when ERL is operating.

Original Check list reads: #14 Post area between west wall of ERL and building wall as access prohibited without an RCT.
Change to: #14 Area between west wall of ERL and building swept, locked and posted HP escort survey required when ERL is operating.

Original Check list reads: #16 Entrance gate to ERL block house posted.
Change to : #16 Outside entrances to building 912 ERL area posted as CONTROLLED AREA, TLD Required.

Original Check list reads: #17Areas around the entrance gates roped off and posted not to enter without HP for the beam tests.
Change to: #17 ERL block house roof swept and locked and posted No Roof Access when ERL is Operating.

Original Check list reads: #25 Building roof posted as needed.
Change to: #25 Building 912 roof above ERL posted No Access when ERL is Operating.

Original Check list reads: #26 Post area between west wall of ERL and building wall as access prohibited without a RCT.

Change to: Post first and second floor of condo as HP escort and survey required when ERL is operating.

Add #33 On east side of ERL transformer area rope and post HP escort and survey required when ERL is operating.

Change Approved: _____ 11-14-2014
RSC Chair Date

Other Approvals (as determined by the RSC Chair):
NA

Personnel to be informed of Change(as determined by the RSC Chair):
NA.

RSC Checklist Change Implemented:

_____ _____ _____
Operations Coordinator **Time Date**

[1]Place in RSC Check-off List Binder at the front of the affected check-off list.

C-A-OPM-ATT 9.1.2.b Page 2 of 2 Revision 04 June 4, 2014

The signatures are valid. Dec 3, 2014

Prepared by: Wencan Xu

Date: Oct. 29, 2014

Reviewed by: [signature]

Date: 10/29/14

Approved by: [signature]

T. Roser

Date: 10/30/14

ERL RSC Check-Off List for Low Power Beam Testing of the ERL SRF electron gun

Completion of this ERL RSC Check-Off List is a prerequisite for beam testing.

Upon completion of this check-off list in the MCR, the ERL cold emission testing (CET) of the SRF electron gun may commence.

1. [signature] (LP) **RSC LOTO has been applied to prevent the 1 MW klystron from being energized. This or equivalent must remain in place until the check-off list is complete.**

2. [signature] (LP) **RSC LOTO has been applied to prevent excitation of the gun cathode by the laser.**

3. [signature] (LE) **First dipole after gun is RS LOTOed off. This must remain LOTOed off until fault studies are complete and reviewed for the straight section.**

4. [signature] (IG) **Slits after gun in first beam transport sections are RS LOTOed fully open.**

5. [signature] (LP) C-AD OPM 2.5.6 must be followed for the low power test.

6. [signature] (IG) Chipmunk operation verified.

7. [signature] (IG) Chipmunk alarm and interlock levels checked against table below.

8. [signature] (LE) ERL block house shielding and barriers inspected and acceptable low power beam operations

9. [signature] (RSCC) ERL shielding improvements reviewed and inspected.

10. [signature] (LE) Barriers are in place at both ends of the trench and posted.

11. DBP (LE) The ladder at the power supply house has a locked barrier and is posted.

12. DBP (LE) Access panel on side of electronic room is locked closed.

13. PB (RCD) Access panel posted. SEE RSC Change form Attached. P.Bu

14. PB (RCD) Post area between West wall of the ERL and building wall as access prohibited without an RCT. SEE RSC change form Attached P.Bu

15. JR (ACG) Chipmunks have interlock function checked. (See attached list).

16. PB (RCD) Entrance gates to the ERL block house posted. SEE RSC change form Attached. P.Bu

17. PB (RCD) Areas around the entrance gates roped off and posted not to enter without HP for the beam tests. SEE RSC change form Attached P.Bu

18. DB (RSCC) The support building against ERL shielding is satisfactory for access without an RCT escort.

19. DBP (LE) Area surrounding ERL is posted as no ladders/no climbing.

20. JR (ACG) All bypasses or temporary jumpers in place have been discussed with RSCC.

21. JR (ACG) ODH interlocks certified.

22. DB (RSCC) ERL shielding has been examined and found acceptable.

23. DB (RSCC) Building roof requirements given to LE and RCD.

24. DB (RSCC) Radiation survey precautions and details given to RCD.

25. PB (RCD) Building roof posted as needed. SEE RSC change form Attached

26. PB (RCD) Post area between West wall of the ERL and building wall as access prohibited without a RCT. SEE RSC change form Attached

27. S (CEE) Conditions from review of Laser and ICT for beam intensity completed, as per review memo.

28. [illegible] (LP) Blockhouse and west fenced areas have been verified as swept.

29. [illegible] (LP) A procedure provides operators instruction for responding to ICT interlocks.

30. [illegible] (LP) Work Control Coordinator (WCC) will be informed of the operations of the ERL gun with beam so that OPM 4.99 and 4.99a can be followed.

31. (LP) ERL ready for low power test.

32. (OC) List completion verified by on-duty operations coordinator.

33. (RCD) SEE RSL Change Form Attached.

When the list above is complete then the RS LOTO of the laser and Klystron can be removed so that low power beam testing can begin to the first Faraday cup.

When the SRF gun is ready to potentially generate beam, the on-duty RCT needs to be in the area to conduct surveys of the shielding and penetrations.

RCD	Radiological Control Division: P. Bergh or desig
LE	Liaison Engineer: D. Phillips or designee
LP	Liaison Physicist: D. Kayran or designee
MCRGL	MCR Group Leader: P. Ingrassia or designee
RSCC	Radiation Safety Committee Chairperson: D. Beav
OC	Operations Coordinator
ACG	Access Control Group: J. Reich or designee
RCT	Radiation Control Technician
IG	Instrumentation Group: M. Minty or designee
CEE	Chief Electrical Engineer: J. Sandberg or designee
RGDC	C-AD RGD Custodian: A. Etkin or designee
WCC	Work Control Coordinator :F. Kobasiuk or designee

CHIPMUNKS			
Name	Location	Interlock [mrem/hr]	Alarm [mrem/hr]
NMO170	North Labyrinth	~~2.5~~ 20 (RCK 11/13/14)	~~1~~ 10 (RCK 11/13/14)
NMO171	North Gate	2.5	1
NMO172	1 MW Waveguide port	2.5	1
NMO173	50 kW Waveguide area	2.5	1
NMO174	West cryo pipe exit	2.5	1
NMO175	South Gate	2.5	1
NMO176	South Labyrinth	~~2.5~~ 50 (RCK 11/13/14)	~~1~~ 20 (RCK 11/13/14)
NMO177	Internal to ERL1	-	-
NMO178	Internal to ERL 2	-	-
NMO181	Gun power limit	20	10
NMO182	Power limit gun and dump	20	10

WXU.
email sent by Dana.
(See ~~etc~~ ~~other~~ next page)

Page 4 of 4

ATTACHMENT #3

ERL_stay **Wed_May_28_2014_9:14:14_AM**

Started: **2014-May-28 09:14:14** Ended: **2014-May-29 00:36:09**

Author1: **Dmitry** Author2: **Wencan,**

Title: **Wed May 28 2014 First Beam Test** Log# **39**

æ 09:25 (1 edit):cp **Shift plan:**

1. Gun at 4k. Insert the cathode
2. Gun at 2k. Establish stable gun operation with cathode inserted.
3. Setup laser, timing, instrumentation
4. Establish first beam from the BNL SRF gun.
5. Carry out initial beam studies and cathode measurements.

a) bunch charge, current, energy, position, size

b) cathode QE, life time -Dmitry

æ May-29-2014 00:36:cp **Summary:** End of the run today.

1. Cathode is inserted into the cavity and clamped as the same steps as last time. The frequency frequenc instead of 190 kHz.

2. The field was ramped up to 1.4 MV, 40 ms quickly and no power missing (no multipacting). To save l we didn't spend a lot of time to look for the longest pulse lenght.

3. Dark current was seen clearly by beam profile monitor and faraday cup, which is about 2 uA. Howeve beam even with scanning RF phase, RF amplitude, laser spot location, laser power increment, and steerii possible ways)

4. The laser beam is seen in beam profile monitor (YAG) by scattering from somewhere, where maybe c somewhere else.

5. We will keep the cavity at 4K until tomorrow morning. The plan is to test the cavity with cathode agai may focus on pushing the pulse length of the voltage. We will have a meeting to discuss the result today

6 Blow off the water, everything is checked ok. -wencan

æ 09:27:cp

Gun is below 4k.

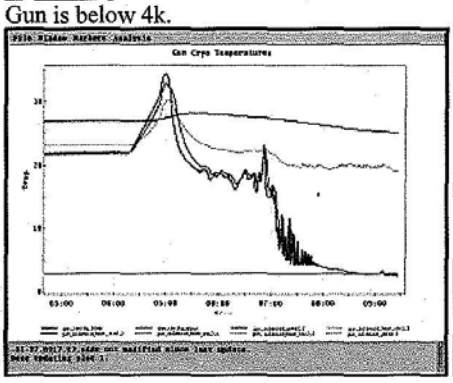

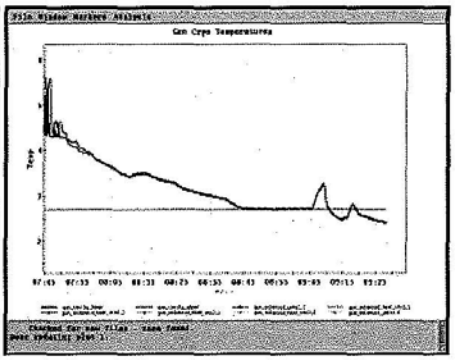

ERL_stay **Mon_Nov_17_2014_9:17:07_AM**

Started: **2014-Nov-17 09:17:07** Ended: **2014-Nov-17 22:45:15**

Author1: **Wencan** Author2:

Title: **Mon Nov 17 2014** Log# **57**

æ 22:45:cp **Summary:** It is a successful beam test today!

1. The vacuum was control very well during the cathode insertion; The cavity was able to reach 1.2 MV
2. Spent some time on looking for beam, and found timing was wrong and corrected it. Then, we see the
3. Observe the beam with 3 Watt laser with 1.2 MV, 20 ms . Bunch charge: 1.7 pC, beam current 2.4 nA
4. Increase the laser power to 6.08 Watt. Bunch charge: 200 pC/66 bunch= 3.2 pC, beam 0.57 uA in tota
5. At the end, we increased the RF pulse to 800 ms to measure the QE change and run it for about 30 mi

Blew off the FPC water and everything is check ok!

The cavity will be kept at 2 K and continue to test tomorrow at 10:00 O'clock.
-Wencan

æ 09:17:cp Beam test today! -wencan

æ 10:23:cp Brian and I measured the cathode QE just now. The QE drops very fast. My feeling is the cc 0.0035% was measured from the transport cart and the screw is still blocking some light. The tight space in the documents.

Here is the reason :

Cathode QE after preparation 2 hours: 0.25%

36 hours later (measured at deposition side): 0.18%

Then Move to ERL cave(measured at cart): 0.03%

Before bake(measured at cart):0.025%

After bake(measured at cart):0.0035%

If assume the cathode QE is no drop while in cart moving, then (0.0035/0.03)*0.18%=0.021%

Thanks,

Erdong -Wencan for Erdong

ERL_stay **Tue_Nov_18_2014_10:05:24_AM**
Started: **2014-Nov-18 10:05:24** Ended: **2014-Nov-18 22:39:44**
Author1: **Wencan** Author2:
Title: **Tue Nov 18 2014** Log# **58**

æ 22:39:cp **Summary:** 1. Measured the beam current at the beginning of this morning and found the be
2. Spent most of time on the fault study for low power beam and completed the three main items.
3. Somehow, at about 2 PM, the laser's Pockels cell driver began to fail intermittently. It was found that i
continued running with a 500 Hz macropulse repetition frequency
4.Measured the beam kinetic energy, which is 1.3 MeV. But we will have to confirm it tomorrow.

Blew off FPC water and everything is checked OK.

-wencan

æ 10:07:cp Beam test today:

1. Beam parameters measurement;
2. Fault study for high beam power test

-wencan

æ 10:08:cp Brian and I checked the laser mirror in the beam line. It is clean! -wencan

---

æ 10:11:cp
the design for the ICT analog reading has 2 trip point one for negative (programmable) and a positive va

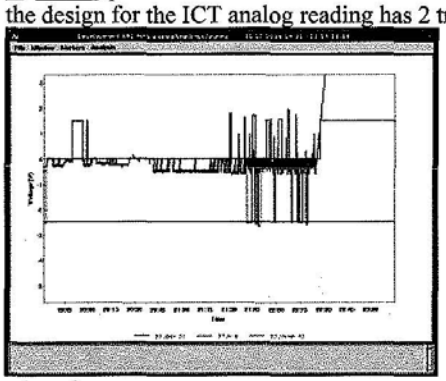

-chungh

æ 10:33:cp Dana was here, and will start fault study soon. -wencan

---

æ 10:52:cp
RF

ERL_stay **Thu_Nov_20_2014_9:20:04_AM**

Started: **2014-Nov-20 09:20:04** Ended: **2014-Nov-20 15:23:40**

Author1: **Dmitry** Author2:

Title: **Thu Nov 20 2014** Log# **59**

æ 09:24 (3 edits):cp **Shift plan:**
1. Check QE. with previouse laser settings
2. Calibrate FC vs ICT signal following procedure.
3. Proceed with updated fault studies plan.
4. Check gun voltage calibrations and magnets.

Reminder: Move NM178 closer to Faraday cup before cave is sweapt. -Dmitry

---

æ 15:23 (1 edit):cp **Summary:** We were able to confirm dark current 45nA by Faraday Cup signal. PM' too.
With laser on haven't seen any photocurrent at ICT, FC, Chipmunk.
Increase laser macropulse length step-wise towards 100usec scanning RF phase at each step. No photocu monitors.
Official declare that no QE at cold cathode condition left.
Will measure QE then cathode is removed from the gun and warmed up.

-Dmitry

æ 09:59:cp We expect cavity be cold and ready for test cold by 11-30 am. -Dmitry

---

æ 11:09:cp
At Dmitry and Brian's request, I've added a new Gpm and logging request under:
Development/ERL/Timing/MasterTimingConfig. Settings are polled once every other second so that we available record of what we were running at any given time.

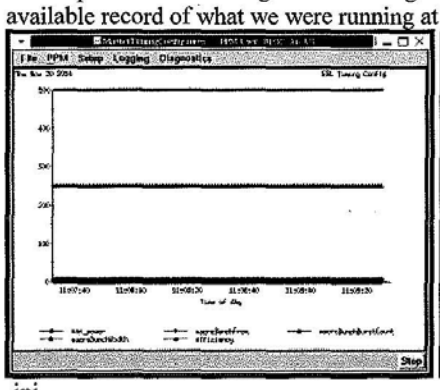

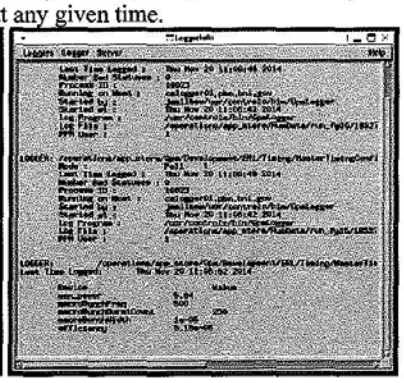

-jpj

æ 12:44:cp Gun at 2K.
We are ready for sweep. -Dmitry.

æ 13:10 (2 edits):cp Chipmunk NMO178 has been shifted to an elevated location downstream at about the Faraday flange. - 68" from beamline - 98" inches directly from flange - 33" inches above floor - 43 d beamline. -LH

ATTACHMENT #4

ERL_stay **Mon_Nov_17_2014_9:17:07 _AM**

Started: **2014-Nov-17 09:17:07** Ended: **2014-Nov-17 22:45:15**

Author1: **Wencan** Author2:

Title: **Mon Nov 17 2014** Log# **57**

22:45:cp **Summary:** It is a successful beam test today!

1. The vacuum was control very well during the cathode insertion; The cavity was able to reach 1.2MV with 3 times vacuum trips and then st
2. Spent some time on looking for beam, and found timing was wrong and corrected it. Then, we see the beam.
3. Observe the beam with 3 Watt laser with 1.2MV, 20ms . Bunch charge: 1.7pC, beam current 2.4nA. beam power 2.6mW. QE is 1.2E-5.
4. Increase the laser power to 6.08 Watt. Bunch charge: 200pC/66bunch= 3.2pC, beam 0.57uA in total and 390nA photo-current .
5. At the end, we increased the RF pulse to 800ms to measure the QE change and run it for about 30 mins with several ICT trips.

Blew off the FPC water and everything is check ok!

The cavity will be kept at 2K and continue to test tomorrow at 10:00 O'clock.
-Wencan

09:17:cp Beam test today! -wencan

---

re 10:23:cp Brian and I measured the cathode QE just now. The QE drops very fast. My feeling is the copper invading the cathode crystal or t 0.0035% was measured from the transport cart and the screw is still blocking some light. The tight space nearly has no way to allow us to tun< in the documents.

Here is the reason :

Cathode QE after preparation 2 hours: 0.25%

36 hours later (measured at deposition side): 0.18%

Then Move to ERL cave(measured at cart): 0.03%

ERL_stay **Tue_Nov_18_2014_10:05:24_AM**

Started: **2014-Nov-18 10:05:24** Ended: **2014-Nov-18 22:39:44**

Author1: **Wencan** Author2:

Title: **Tue** Nov 18 **2014** Log# 58

---

re 22:39:cp **Summary:** 1. Measured the beam current at the beginning of this morning and found the beam current is 1 uA

2. Spent most of time on the fault study for low power beam and completed the three main items.

3. Somehow, at about 2 PM, the laser's Pockels cell driver began to fail intermittently. It was found that it would function for long periods (ho continued running with a 500 Hz macropulse repetition frequency

4. Measured the beam kinetic energy, which is 1.3 MeV. But we will have to confirm it

tomorrow. Blew off FPC water and everything is checked OK.

-wencan

---

re 10:07:cp Beam test today:

1. Beam parameters measurement;
2. Fault study for high beam power test

-wencan

10:08:cp Brian and I checked the laser mirror in the beam line. It is clean! -wencan

---

re 10:11:cp

the design for the ICT analog reading has 2 trip point one for negative (programmable) and a positive value (fixed+1.Sv) The data showed tl

ATTACHMENT #5

C-A ACCELERATOR SYSTEMS SAFETY REVIEW COMMITTEE CHECK-OFF LIST

Prepared by: D. Raparia
Approved by: [illegible]

Date: April 25, 2014
Date: 4/25/14

ASSRC Check-Off List for: ***Walkthrough of ERL Test Setup for Stage 1 Low Power Gun Testing on April 24, 2014***

Checklist items 1 through 16 must be completed before low power gun tests are started

Checklist Item #	Initials	Title	Description of check-off list item
CK-01	JBP	LE	All areas of the ERL facility require a significant cleanup of unneeded materials and combustibles, including a thorough inspection for trip hazards. These problems need to be fixed
CK-02	JBP	LE	Inspect the ERL facility and remove any daisy chaining of extension cords
CK-03	JBP	LE	No extension cords can be in cable tray including Chipmunk cords
CK-04	AOR	ISTS	Ensure that only Chipmunks that are expected to be moved to different locations over the ERL testing program are powered by extension cords
CK-05	[illegible]	~~ISTS~~ ~~ACG~~	Chipmunk NMO-182 has its cord enter the ERL enclosure through a shield block seam in the ERL roof. The RSC Chair requests that this be modified to an appropriate method for cave entry
CK-06	JBP	LE	All beam line stands that will have powered equipment must be inspected and proper stand grounds installed
CK-07	JBP	LE	The floor grating over water hoses and the Laser transport pipe to the gun needs to have yellow and black striped tape on each edge to make this step more visible to reduce a trip hazard
CK-08	JBP	LE	Remove any temporary fire extinguishers in the ERL enclosure and ensure that permanent extinguishers are properly mount and labeled so they can be quickly located
CK-09	[illegible]	PDGL	All equipment that will be energized for the Stage 1 low power test must have a completed Equipment Electrical Inspection
CK-10	JBP	LE	There were a few loose disconnected cable tags found on the floor of the ERL enclosure. Inspect all loose cables at the ERL facility and hang properly filled out green Disconnected Cable tags out where required
CK-11	JBP	LE	Electrical Panel PNL SCH-ERL-RP1 (912-P-204) on the west outside wall of the ERL enclosure need the load schedule checked and filled out as per NEC requirements
CK-12	[illegible]	LS	Place Laser warning postings on the black laser mirror enclosure as required by SBMS
CK-13	[illegible]	SE	Update the Noise Posting on the entry door to the pump room trailer
CK-14	JBP	LE	It appears that the heat tape cord that is on the outside ERL west enclosure wall by the helium manifold is daisy chained. Check this configuration and correct as necessary
CK-15	JBP	LE	Although not directly related to the low power test, Stage 1, the ERL LE needs to contact ESSHQ Division to inspect the instrumentation on the water cooled beam dump before the "butter dish" shield is installed over the beam dump
CK-16	[illegible]	ERLS	Contact the ESSHQ Division to inspect the cathode cart when it is returned

< Only require to ground this cart >

Checklist Item #	Initials	Title	Description of check-off list item
			to its final position at the ERL gun
CK-17		ERLPL	Contact the ASSRC when ready to begin Stage 2 of the ERL low power testing for another ASSRC walk through

LE – Liaison Engineer, D. Phillips
PDGL – Power Distr. GL, P.K. Feng
SE – Safety Engineer, P. Cirnigliaro
ISTS - Instrument Systems Technical Supervisor, T. Curcio
LS – Laser Scientist, B. Sheehy
ERLS – ERL Scientist, W. Xu
ERLPL- ERL Project Leader, D. Kayran

I allow Stage 1 ERL Low Power Gun Testing to begin:

Signature: Associate Chair for Accelerator R&D

Building 911
P.O. Box 5000
Upton, NY 11973-5000

BROOKHAVEN NATIONAL LABORATORY

managed by Brookhaven Science Associates
for the U.S. Department of Energy

C-A Accelerator Systems Safety Review Committee

Memo

date: *April 24, 2014*

to: *ASSRC Members and Guests*

from: *D. Raparia and R. Karol*

subject: ***Walkthrough of ERL Test Setup for Stage 1 Low Power Gun Testing on April 24, 2014***

Members: D. Raparia*, J. Alessi, P. Bergh, P. Cirnigliaro*, F. Craner, A. Drees, A. Etkin*, P. K. Feng*, P. Ingrassia, S. Jao*, R. Karol*, M. Kretschmann, K. Kusche*, E. Lessard*, G. McIntyre, W. Needrith, D. Phillips*, J. Sandberg, M. Sivertz, J. Tuozzolo, R. Than*, M. Van Essendelft, J. Wright
**members present*

Guests: T. Miller, L. Hammons, T. Seda, G. Mahler, J. Fite, M. Wilinski, P. Sullivan (BHSO)

Presenters: D. Phillips, D. Kayran, W. Xu, B. Sheehy

This walkthrough was conducted in preparation for Stage 1 low power testing of the ERL gun. BHSO has approved an exemption from the requirement to have an Accelerator Readiness Review (ARR) before this test begins[1] based on a C-AD USI Form written for the low power testing[2]. The beam power is limited to 70 W but the project expects that 7 W to 10 W will be sufficient to achieve the desired test results. Machine Protection System (MPS) will limit the beam power to desire level by monitoring beam current at Integrating Current Transformer (ICT) and Faraday Cup. Stage 1 of the test involves inserting a cathode into the superconducting (SC) ERL gun, RF supplied to the gun from the Klystron and beam generated by a laser beam focused on the cathode. For this phase, the electron beam will be transported from the gun through beam pipe, an ICT, through an open gate valve whose position can only be changed manually in the current configuration, past a LOTO'd off dipole magnet (to prevent the beam from being transported to the 5-cell cavity), then to a Faraday Cup which acts as the beam stop. The start of this Stage 1 test is expected to be the week of May 8th and will continue for a few months. Stage 2 is another portion of the low power testing but all the components are not yet installed for this test so another ASSRC walkthrough will be scheduled for that test.

Following the low power testing, an ARR is scheduled for the end of July to allow high current gun testing to prove that the cathode can supply the required current for the future eRHIC upgrade. From that point on the exemption for low power testing will be withdrawn and the ARR process for all phases of ERL commissioning and operations will be in place up to the final configuration of the ERL as described in the C-AD SAD.

The walk through began in the ERL block house with Dmitry Kayran and Wencan Xu making the presentations. The Laser Room was reviewed by Brian Sheehy. The 2nd floor of the pump room

[1] Letter from F. Crescenzo (BHSO) to G. Goode (BNL) dated September 10, 2013, APPROVAL OF THE EXEMPTION REQUEST FOR THE PROTOTYPE ENERGY RECOVERY LINAC (ERL) LOW POWER TESTING
[2] C-AD Unreviewed Safety Issue Form for ERL Low Power testing dated 12/4/12.

trailer was reviewed by D. Phillips showing where the magnet power supplies and instrument powers supplies were located. The ERL Instrument Room and the ERL Control Room in the trailer adjacent to B912 NEBA was reviewed by Dmitry Kayran and Wencan Xu. The cathode cart which is currently being repaired was in place for the walk though. The Committee focused only on the areas involved in the low power gun test, Stage 1.

Based upon the inspection during the walk through, the Committee requires that the following items, 1 through 16, be completed before the low power testing begins:

1. The Committee understands that there is a large amount of work in progress at ERL in preparation for the upcoming low power testing, however, all areas of the ERL facility require a significant cleanup of unneeded materials and combustibles, including a thorough inspection for trip hazards. These problems need to be fixed (**CK-01, D. Phillips**)
2. Inspect the ERL facility and remove any daisy chaining of extension cords (**CK-02, D. Phillips**)
3. No extension cords can be in cable tray including Chipmunk cords (**CK-03, D. Phillips**)
4. Ensure that only Chipmunks that are expected to be moved to different locations over the ERL testing program are powered by extension cords (**CK-04, T. Curcio**)
5. Chipmunk NMO-182 has its cord enter the ERL enclosure through a shield block seam in the ERL roof. The RSC Chair requests that this be modified to an appropriate method for cave entry (**CK-05, T. Curcio**)
6. All beam line stands that will have powered equipment must be inspected and proper stand grounds installed (**CK-06, D. Phillips**)
7. The floor grating over water hoses and the Laser transport pipe to the gun needs to have yellow and black striped tape on each edge to make this step more visible to reduce a trip hazard (**CK-07, D. Phillips**)
8. Remove any temporary fire extinguishers in the ERL enclosure and ensure that permanent extinguishers are properly mount and labeled so they can be quickly located (**CK-08, D. Phillips**)
9. It is recognized that ERL construction began before the BNL Electrical Equipment Inspection Program was in place. All equipment that will be energized for the Stage 1 low power test must have a completed Equipment Electrical Inspection (**CK-09, P. K. Feng**)
10. There were a few loose disconnected cable tags found on the floor of the ERL enclosure. Inspect all loose cables at the ERL facility and hang properly filled out green Disconnected Cable tags out where required (**CK-10, D. Phillips**)
11. Electrical Panel PNL SCH-ERL-RP1 (912-P-204) on the west outside wall of the ERL enclosure need the load schedule checked and filled out as per NEC requirements (**CK-11, D. Phillips**)
12. Place Laser warning postings on the black laser mirror enclosure as required by SBMS (**CK-12, B. Sheehy**)
13. Update the Noise Posting on the entry door to the pump room trailer (**CK-13, P. Cirnigliaro**)
14. It appears that the heat tape cord that is on the outside ERL west enclosure wall by the helium manifold is daisy chained. Check this configuration and correct as necessary (**CK-14, D. Phillips**)
15. Although not directly related to the low power test, Stage 1, the ERL LE needs to contact ESSHQ Division to inspect the instrumentation on the water cooled beam dump before the "butter dish' shield is installed over the beam dump (**CK-15, D. Phillips**)
16. Contact the ESSHQ Division to inspect the cathode cart when it is returned to its final position at the ERL gun (**CK-16, W. Xu**)
17. Contact the ASSRC when ready to begin Stage 2 of the ERL low power testing for another ASSRC walk through (**CK-17, D. Kayran**)

Dist:	ASSRC	I. Ben-Zvi
	Guests	D. Passarello
	T. Roser	
	W. Fischer	

Building 911
P.O. Box 5000
Upton, NY 11973-5000

BROOKHAVEN
NATIONAL LABORATORY

managed by Brookhaven Science Associates
for the U.S. Department of Energy

C-A Accelerator Systems Safety Review Committee

Memo

date: *May 27, 2014*

to: *ASSRC Members and Guests*

from: *D. Raparia and P. Cirnigliaro*

subject: ***Walkthrough of Cathode Cart for ERL Test Setup for Stage 1 Low Power Gun Testing on May 27, 2014***

Members: D. Raparia*, J. Alessi, P. Bergh, P. Cirnigliaro*, F. Craner, A. Drees, A. Etkin*, P. K. Feng*, P. Ingrassia, S. Jao, R. Karol, M. Kretschmann, K. Kusche, E. Lessard, G. McIntyre, W. Needrith, D. Phillips*, J. Sandberg, M. Sivertz, J. Tuozzolo, R. Than*, M. Van Essendelft, J. Wright
**members present*

Guests: T. Seda, W. Xu,
Presenters: D. Phillips, D. Weiss, R. Anderson

This walkthrough was conducted in preparation for Stage 1 low power testing of the ERL gun. This test involves inserting a cathode into the superconducting (SC) ERL gun, RF supplied to the gun from the Klystron and beam generated by a laser beam focused on the cathode.
This walkthrough by the ASSRC completes checklist item 16 (**CK-16**) generated from the ASSRC walkthrough of *ERL Test Setup for Stage 1 Low Power Gun Testing performed on April 24, 2014*.

The walkthrough took place in the ERL block house with, D. Phillips, D. Weiss, R. Anderson, making presentations. The cathode cart was located in place and ready for operations. The Committee focused only on this area involved in the low power gun test, Stage 1. The committee discussed the use of low flow (0.25 gpm) of LN2 in the clean room, and determined that is was not a significant hazard. Operation Procedures have been written and implemented for the operation of the cathode cart. Bonding of the cart stand and the vacuum racks were found to be adequate.

Based upon the inspection during the walk through, the Committee found no items to be corrected.

Dist: ASSRC T. Roser
W. Fischer
D. Passarello
I. Ben-Zvi
Guests

Attachment #6

Requirements for KAYRAN, DMITRY

(AD-761) ERL Shift Leader			
Course No.	Requirements for this JTA	Date Completed	Date Expires
AD-CA_ACCESS	Collider-Accelerator Access Training	12/6/2012	12/6/2014
AD-OPM-1.20	C-A Policy for Valuable Materials Security	7/17/2014	7/17/2016
AD-OPM-10.1	Occurrence Reporting & Processing of Ops Info	7/17/2014	NA
AD-OPM-10.1.D	Operator Response to Water Spills	7/23/2014	7/23/2015
AD-OPM-10.1.E	Operator Response to Smoke in C-A Primary Areas	7/23/2014	7/23/2015
AD-OPM-18.2.1	ERL Operations Organization and Administration	3/28/2014	3/28/2016
AD-OPM-18.2.2	ERL Operating Practices	3/28/2014	3/28/2016
AD-OPM-18.3.1	Emergency Proc for the R&D Energy Recovery Linac	3/28/2014	3/28/2015
AD-OPM-18.3.2	Response to Low Oxygen Alarm in Bldg 912 R&D Area	3/28/2014	3/28/2015
AD-OPM-18.4.1	Operation of ERL Particle Accel Security Sys	3/28/2014	3/28/2016
AD-OPM-18.4.1.A	ERL Experimental Area Sweep Checklist	3/28/2014	3/28/2015
AD-OPM-18.4.2 (R&A)	Securing ERL W. Alley for Beam Ops (R&A)	7/17/2014	7/17/2015
AD-OPM-18.4.2.A	ERL Experimental Area Sweep Checklist	3/28/2014	3/28/2015
AD-OPM-18.6.1	Responding to Chipmunk Alarms and Interlocks	3/28/2014	3/28/2015
AD-OPM-18.6.2	ALARA Strategies for Tuning During ERL Operations	3/28/2014	3/28/2016
AD-OPM-2.12	Communications Practices	7/23/2014	7/23/2015
AD-OPM-2.28	C-AD Procedure for Work Planning	7/23/2014	7/23/2015
AD-OPM-2.3	Activities in Control Rooms	7/24/2014	7/24/2016
AD-OPM-2.4	Operator Trainees	7/23/2014	7/23/2015
AD-OPM-2.5.6	ERL Commissioning Accel Safety Envelope (CASE)	3/28/2014	3/28/2015
AD-OPM-2.5.6.1	ASE Credited Controls & Supports/ERL High Current	7/23/2014	7/23/2015
AD-OPM-2.7	Logkeeping	7/23/2014	7/23/2015
AD-OPM-2.8	Shift Turnover	7/23/2014	7/23/2015
AD-OPM-3.0	Local Emergency Plan for the C-A Dept	4/7/2014	4/7/2016
AD-OPM-3.2	Emergency Procedures to be Implemented by the LEC	4/2/2014	4/2/2016
AD-OPM9.1.16	Lockout/Tagout for Radiation Safety (RS LOTO)	7/23/2014	7/23/2015
HP-OSH-025	Cryogen Safety	2/18/2004	NA
HP-OSH-150A	Basic Electrical Safety	4/5/2011	NA
HP-OSH-151A	Lockout/Tagout - Affected Employee	2/18/2004	NA
HP-OSH-151A-W	Lockout/Tagout - Affected Employee	2/18/2004	NA
HP-RWT002	Radiological Worker I	3/28/2014	3/28/2016
TQ-NOISE	Noise and Hearing Conservation	4/18/2014	4/18/2015
TQ-ODH	Oxygen Deficiency Hazard - Class 0	12/6/2012	12/6/2014
TQ-SMF	Static Magnetic Fields	1/27/2012	1/27/2015

Requirements for PTITSYN, VADIM

(AD-761) ERL Shift Leader			
Course No.	Requirements for this JTA	Date Completed	Date Expires
AD-CA_ACCESS	Collider-Accelerator Access Training	11/24/2014	11/24/2016
AD-OPM-1.20	C-A Policy for Valuable Materials Security	7/22/2014	7/22/2016
AD-OPM-10.1	Occurrence Reporting & Processing of Ops Info	7/22/2014	NA
AD-OPM-10.1.D	Operator Response to Water Spills	7/22/2014	7/22/2015
AD-OPM-10.1.E	Operator Response to Smoke in C-A Primary Areas	7/22/2014	7/22/2015
AD-OPM-18.2.1	ERL Operations Organization and Administration	3/25/2014	3/25/2016
AD-OPM-18.2.2	ERL Operating Practices	3/25/2014	3/25/2016
AD-OPM-18.3.1	Emergency Proc for the R&D Energy Recovery Linac	3/25/2014	3/25/2015
AD-OPM-18.3.2	Response to Low Oxygen Alarm in Bldg 912 R&D Area	3/25/2014	3/25/2015
AD-OPM-18.4.1	Operation of ERL Particle Accel Security Sys	3/25/2014	3/25/2016
AD-OPM-18.4.1.A	ERL Experimental Area Sweep Checklist	3/25/2014	3/25/2015
AD-OPM-18.4.2 (R&A)	Securing ERL W. Alley for Beam Ops (R&A)	7/22/2014	7/22/2015
AD-OPM-18.4.2.A	ERL Experimental Area Sweep Checklist	3/25/2014	3/25/2015
AD-OPM-18.6.1	Responding to Chipmunk Alarms and Interlocks	3/25/2014	3/25/2015
AD-OPM-18.6.2	ALARA Strategies for Tuning During ERL Operations	3/25/2014	3/25/2016
AD-OPM-2.12	Communications Practices	7/22/2014	7/22/2015
AD-OPM-2.28	C-AD Procedure for Work Planning	7/22/2014	7/22/2015
AD-OPM-2.3	Activities in Control Rooms	7/22/2014	7/22/2016
AD-OPM-2.4	Operator Trainees	7/22/2014	7/22/2015
AD-OPM-2.5.6	ERL Commissioning Accel Safety Envelope (CASE)	3/25/2014	3/25/2015
AD-OPM-2.5.6.1	ASE Credited Controls & Supports/ERL High Current	7/22/2014	7/22/2015
AD-OPM-2.7	Logkeeping	7/22/2014	7/22/2015
AD-OPM-2.8	Shift Turnover	7/22/2014	7/22/2015
AD-OPM-3.0	Local Emergency Plan for the C-A Dept	3/25/2014	3/25/2016
AD-OPM-3.2	Emergency Procedures to be Implemented by the LEC	3/25/2014	3/25/2016
AD-OPM9.1.16	Lockout/Tagout for Radiation Safety (RS LOTO)	7/24/2014	7/24/2015
HP-OSH-025	Cryogen Safety	4/28/2014	NA
HP-OSH-150A	Basic Electrical Safety	5/2/2014	NA
HP-OSH-151A	Lockout/Tagout - Affected Employee	5/13/2014	NA
HP-OSH-151A-W	Lockout/Tagout - Affected Employee	5/13/2014	NA
HP-RWT002	Radiological Worker I	11/6/2014	11/6/2016
TQ-NOISE	Noise and Hearing Conservation	8/4/2014	8/4/2015
TQ-ODH	Oxygen Deficiency Hazard - Class 0	11/24/2014	11/24/2016
TQ-SMF	Static Magnetic Fields	5/28/2013	5/28/2016

Requirements for SEDA, THOMAS

(AD-763) ERL Control Room Technician			
Course No.	Requirements for this JTA	Date Completed	Date Expires
AD-CA_ACCESS	Collider-Accelerator Access Training	7/11/2014	7/11/2016
AD-ELECSAFETY-1	C-AD Electrical Safe Work Practices-1	8/5/2013	8/5/2016
AD-LOTO-OJT	Department-Specific Lockout/Tagout	9/5/2014	9/5/2015
AD-OPM-1.20	C-A Policy for Valuable Materials Security	6/23/2014	6/23/2016
AD-OPM-10.1.D	Operator Response to Water Spills	6/26/2014	6/26/2015
AD-OPM-10.1.E	Operator Response to Smoke in C-A Primary Areas	6/26/2014	6/26/2015
AD-OPM-18.11.1	LOTO Procedure for Personnel Entry into the ERL	3/24/2014	3/24/2016
AD-OPM-18.11.2	LOTO for the ERL During Accelerator Operations	3/24/2014	3/24/2016
AD-OPM-18.2.1	ERL Operations Organization and Administration	3/24/2014	3/24/2016
AD-OPM-18.2.2	ERL Operating Practices	3/24/2014	3/24/2016
AD-OPM-18.3.1	Emergency Proc for the R&D Energy Recovery Linac	3/24/2014	3/24/2015
AD-OPM-18.3.2	Response to Low Oxygen Alarm in Bldg 912 R&D Area	3/24/2014	3/24/2015
AD-OPM-18.4.1	Operation of ERL Particle Accel Security Sys	3/24/2014	3/24/2016
AD-OPM-18.4.1.A	ERL Experimental Area Sweep Checklist	5/27/2014	5/27/2015
AD-OPM-18.4.2 (R&A)	Securing ERL W. Alley for Beam Ops (R&A)	7/22/2014	7/22/2015
AD-OPM-18.6.1	Responding to Chipmunk Alarms and Interlocks	3/24/2014	3/24/2015
AD-OPM-18.6.2	ALARA Strategies for Tuning During ERL Operations	3/24/2014	3/24/2016
AD-OPM-2.12	Communications Practices	6/24/2014	6/24/2015
AD-OPM-2.28	C-AD Procedure for Work Planning	6/26/2014	6/26/2015
AD-OPM-2.3	Activities in Control Rooms	7/23/2014	7/23/2016
AD-OPM-2.4	Operator Trainees	6/23/2014	6/23/2015
AD-OPM-2.5.6	ERL Commissioning Accel Safety Envelope (CASE)	3/24/2014	3/24/2015
AD-OPM-2.5.6.1	ASE Credited Controls & Supports/ERL High Current	6/24/2014	6/24/2015
AD-OPM-2.7	Logkeeping	6/24/2014	6/24/2015
AD-OPM-2.8	Shift Turnover	7/22/2014	7/22/2015
AD-OPM-3.0	Local Emergency Plan for the C-A Dept	3/24/2014	3/24/2016
AD-OPM-3.2	Emergency Procedures to be Implemented by the LEC	3/24/2014	3/24/2016
HP-OSH-025	Cryogen Safety	6/17/1998	NA
HP-OSH-151B-W	Lockout/Tagout (LOTO)	9/8/2014	9/8/2015
HP-RWT002	Radiological Worker I	8/19/2014	8/19/2016
TQ-ELECSAF1	Electrical Safety I	4/2/2013	4/2/2015
TQ-LOTO-P	LOTO Job Performance Measure	9/5/2014	9/5/2015
TQ-NOISE	Noise and Hearing Conservation	6/2/2014	6/2/2015
TQ-ODH	Oxygen Deficiency Hazard - Class 0	7/11/2014	7/11/2016
TQ-SMF	Static Magnetic Fields	8/20/2013	8/20/2016

Requirements for KELLERMANN, ROBERT

(AD-763) ERL Control Room Technician			
Course No.	Requirements for this JTA	Date Completed	Date Expires
AD-CA_ACCESS	Collider-Accelerator Access Training	9/17/2014	9/17/2016
AD-ELECSAFETY-1	C-AD Electrical Safe Work Practices-1	11/20/2012	11/20/2015
AD-LOTO-OJT	Department-Specific Lockout/Tagout	9/19/2014	9/19/2015
AD-OPM-1.20	C-A Policy for Valuable Materials Security	6/25/2014	6/25/2016
AD-OPM-10.1.D	Operator Response to Water Spills	6/25/2014	6/25/2015
AD-OPM-10.1.E	Operator Response to Smoke in C-A Primary Areas	6/26/2014	6/26/2015
AD-OPM-18.11.1	LOTO Procedure for Personnel Entry into the ERL	3/24/2014	3/24/2016
AD-OPM-18.11.2	LOTO for the ERL During Accelerator Operations	3/24/2014	3/24/2016
AD-OPM-18.2.1	ERL Operations Organization and Administration	3/24/2014	3/24/2016
AD-OPM-18.2.2	ERL Operating Practices	3/24/2014	3/24/2016
AD-OPM-18.3.1	Emergency Proc for the R&D Energy Recovery Linac	3/24/2014	3/24/2015
AD-OPM-18.3.2	Response to Low Oxygen Alarm in Bldg 912 R&D Area	3/24/2014	3/24/2015
AD-OPM-18.4.1	Operation of ERL Particle Accel Security Sys	3/24/2014	3/24/2016
AD-OPM-18.4.1.A	ERL Experimental Area Sweep Checklist	5/27/2014	5/27/2015
AD-OPM-18.4.2 (R&A)	Securing ERL W. Alley for Beam Ops (R&A)	7/14/2014	7/14/2015
AD-OPM-18.6.1	Responding to Chipmunk Alarms and Interlocks	3/24/2014	3/24/2015
AD-OPM-18.6.2	ALARA Strategies for Tuning During ERL Operations	3/24/2014	3/24/2016
AD-OPM-2.12	Communications Practices	6/26/2014	6/26/2015
AD-OPM-2.28	C-AD Procedure for Work Planning	6/26/2014	6/26/2015
AD-OPM-2.3	Activities in Control Rooms	7/22/2014	7/22/2016
AD-OPM-2.4	Operator Trainees	6/26/2014	6/26/2015
AD-OPM-2.5.6	ERL Commissioning Accel Safety Envelope (CASE)	3/24/2014	3/24/2015
AD-OPM-2.5.6.1	ASE Credited Controls & Supports/ERL High Current	6/26/2014	6/26/2015
AD-OPM-2.7	Logkeeping	6/26/2014	6/26/2015
AD-OPM-2.8	Shift Turnover	7/9/2014	7/9/2015
AD-OPM-3.0	Local Emergency Plan for the C-A Dept	3/24/2014	3/24/2016
AD-OPM-3.2	Emergency Procedures to be Implemented by the LEC	3/24/2014	3/24/2016
HP-OSH-025	Cryogen Safety	10/8/2012	NA
HP-OSH-151B-W	Lockout/Tagout (LOTO)	9/26/2014	9/26/2015
HP-RWT002	Radiological Worker I	9/30/2014	9/30/2016
TQ-ELECSAF1	Electrical Safety I	9/25/2014	9/25/2016
TQ-LOTO-P	LOTO Job Performance Measure	9/19/2014	9/19/2015
TQ-NOISE	Noise and Hearing Conservation	9/19/2014	9/19/2015
TQ-ODH	Oxygen Deficiency Hazard - Class 0	9/17/2014	9/17/2016
TQ-SMF	Static Magnetic Fields	10/1/2012	10/1/2015

Requirements for HAMMONS, LEE

(AD-762) ERL Operations Coordinator			
Course No.	Requirements for this JTA	Date Completed	Date Expires
AD-CA_ACCESS	Collider-Accelerator Access Training	11/4/2014	11/4/2016
AD-ELECSAFETY-1	C-AD Electrical Safe Work Practices-1	6/15/2012	6/15/2015
AD-OPM-1.20	C-A Policy for Valuable Materials Security	6/19/2014	6/19/2016
AD-OPM-10.1	Occurrence Reporting & Processing of Ops Info	6/19/2014	NA
AD-OPM-10.1.D	Operator Response to Water Spills	6/19/2014	6/19/2015
AD-OPM-10.1.E	Operator Response to Smoke in C-A Primary Areas	6/19/2014	6/19/2015
AD-OPM-18.2.1	ERL Operations Organization and Administration	3/24/2014	3/24/2016
AD-OPM-18.2.2	ERL Operating Practices	3/24/2014	3/24/2016
AD-OPM-18.3.1	Emergency Proc for the R&D Energy Recovery Linac	3/26/2014	3/26/2015
AD-OPM-18.3.2	Response to Low Oxygen Alarm in Bldg 912 R&D Area	3/27/2014	3/27/2015
AD-OPM-18.4.1	Operation of ERL Particle Accel Security Sys	3/28/2014	3/28/2016
AD-OPM-18.4.1.A	ERL Experimental Area Sweep Checklist	6/19/2014	6/19/2015
AD-OPM-18.4.2 (R&A)	Securing ERL W. Alley for Beam Ops (R&A)	6/19/2014	6/19/2015
AD-OPM-2.12	Communications Practices	6/19/2014	6/19/2015
AD-OPM-2.28	C-AD Procedure for Work Planning	6/19/2014	6/19/2015
AD-OPM-2.3	Activities in Control Rooms	7/22/2014	7/22/2016
AD-OPM-2.4	Operator Trainees	6/19/2014	6/19/2015
AD-OPM-2.5.6	ERL Commissioning Accel Safety Envelope (CASE)	3/26/2014	3/26/2015
AD-OPM-2.5.6.1	ASE Credited Controls & Supports/ERL High Current	6/19/2014	6/19/2015
AD-OPM-2.7	Logkeeping	6/19/2014	6/19/2015
AD-OPM-2.8	Shift Turnover	6/19/2014	6/19/2015
AD-OPM-3.0	Local Emergency Plan for the C-A Dept	3/24/2014	3/24/2016
AD-OPM-3.2	Emergency Procedures to be Implemented by the LEC	4/2/2014	4/2/2016
AD-OPM9.1.16	Lockout/Tagout for Radiation Safety (RS LOTO)	3/11/2014	3/11/2015
HP-OSH-025	Cryogen Safety	10/11/2012	NA
HP-OSH-150A	Basic Electrical Safety	3/11/2014	NA
HP-OSH-151A	Lockout/Tagout - Affected Employee	9/22/2014	NA
HP-OSH-151A-W	Lockout/Tagout - Affected Employee	9/22/2014	NA
HP-OSH-151B-W	Lockout/Tagout (LOTO)	9/22/2014	9/22/2015
HP-RWT002	Radiological Worker I	11/1/2013	11/1/2015
TQ-ELECSAF1	Electrical Safety I	3/11/2014	3/11/2016
TQ-NOISE	Noise and Hearing Conservation	10/2/2014	10/2/2015
TQ-ODH	Oxygen Deficiency Hazard - Class 0	11/4/2014	11/4/2016
TQ-SMF	Static Magnetic Fields	5/24/2013	5/24/2016

Attachment #7

From: Sullivan, Patrick T (DOE)
Sent: Monday, November 24, 2014 10:30 AM
To: Lessard, Edward T
Cc: Hammons, Lee; Schaefer, Charles W; Dikeakos, Maria
Subject: ERL Review

Ed,

Here are some suggestions you may want to pass along to Dmitry to use for documenting the ERL Low Power Test Operation review that was required as part of the DOE exemption approval. Although it is beyond the requested timeframe (September 2014), it is understood that the additional time was spent to develop an operating cathode. These items come mainly from OPM 2.5.6. Please include any assurance methods that were utilized to monitor and track the operation as part of the review.

1. Review all ERL RSC checklists to ensure the appropriate signatures were obtained each time ERL was set for operations.
2. Review the ERL Logbook to ensure that beam power parameters were logged daily as required and were within specified parameters.
3. Ensure that each test at ERL was reviewed by ASSRC, ESRC or RSC before the start of each run with beam or attempted run with beam.
4. Ensure at least one ERL person was in the ERL control room during all beam operations.
5. Ensure that the ERL configuration has been reviewed by the ASSRC within the last year.
6. Ensure the ERL shift leader completed qualifications of all personnel responsible for implementing the sweep procedure.
7. Ensure the ERL shift leader re-signed the RSC checklist if more than 7-days elapsed between tests/attempted tests.

U.S. DEPARTMENT OF ENERGY

Patrick T. Sullivan, CSP, RRPT
U.S. Department of Energy
Brookhaven Site Office
Operations Management Division
Office: (631) 344-4092
sulli@bnl.gov

Reviewers:

R. Karol

E. Lessard

T. Roser

Distribution:
I. Ben-Zvi
L. Hammons
R. Karol
D. Kayran
E. Lessard
D. Passarello
T. Roser

Commissioning of the ERL, Stage 2 of the Commissioning Plan

The final layout of the Energy Recovery Linac (ERL) is described in Figure 1.

It is intended that the ERL will be undergo the Accelerator Readiness Review (ARR) process in two stages before it commissioned in Building 912.

Stage 1 ARR was associated with the commissioning of the beam path from the gun to the beam dump, with the 5-cell SRF accelerating cavity turned off. During the first ARR, the ERL loop magnets and vacuum chamber as well as associated components were not addressed.

Stage 2 ARR is associated with the commissioning of the 5-cell cryomodule and ERL return loop. During the Stage 2 ARR, which occurs prior to commissioning approval by BHSO, all ERL components will be reviewed for full current and full energy commissioning. The current and energy limits are in the ERL Accelerator Safety Envelope (ASE).

After completion of the Stage 2 ERL ARR, receipt of BHSO authorization to commence commissioning activities, and subsequent completion of commissioning activities in building 912, ERL will be moved to its final location at RHIC IP2. This will require a third stage ARR prior to commissioning at IP2.

Table 1 provides a detailed list of the components shown in Figure 1that are associated with the Stage 1 and 2 ARR reviews.

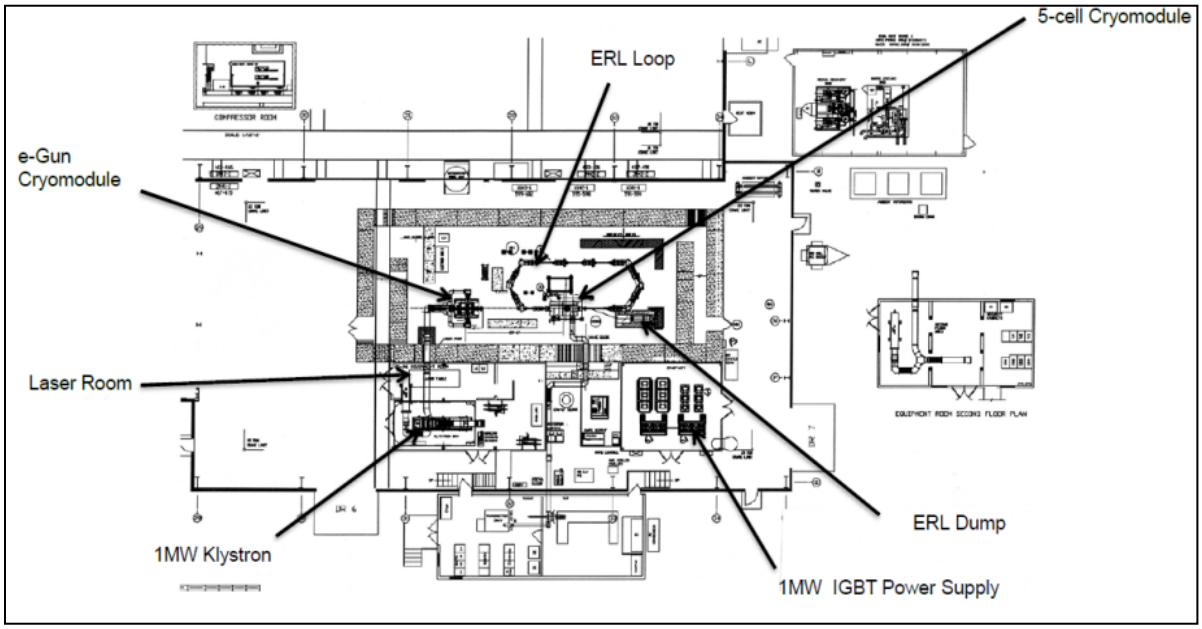

Figure 1. Final Layout of BNL R&D ERL at Building 912

The ERL uses a high-current electron beam generated by a laser-photocathode superconducting RF (SRF) electron gun. A laser is illuminating a photocathode located in the SRF gun to generate the electron beam.

The electron beam is focused and guided by a collection of magnets in an evacuated beam pipe. These magnets are energized by power supplies. The shielding accounts for all angles of electron beam bending that can be driven by maximum magnet current.
The operation of the SRF gun and 5-cell SRF cavity is controlled by RF electronics, including high-power amplifiers. After passing through the ERL, the beam is disposed in a high-power, water-cooled beam-dump.

The ERL is equipped with beam instrumentation that measures beam current, beam location, size, energy and other more specific parameters. The instrumentation also includes radiation measurement devices to detect secondary radiation from potential beam losses.

The ERL enclosure is shielded by a concrete and steel enclosure designed to attenuate the radiation generated by the operation of the ERL. Access into the ERL enclosure is controlled by an engineered Personnel Protection System (PPS).

The ERL is equipped with a machine protection system that shuts off the beam, RF power or other components to protect the ERL equipment during commissioning. A computer control system governs all the machine parameters and collects data.

Table 1 List of ERL Components Required for Readiness Reviews

ARR Stage 1 Gun to Dump Commissioning Equipment		Additional ARR Stage 2 Loop Commissioning Equipment
Photocathode	Laser	SRF accelerating 5-cell cavity
SRF gun	Klystron	50 kW RF amplifier
High power RF amplifier	Beam instrumentation: DCCT, Rad Monitors, BPM	Loop beam instrumentation
Magnets: dipoles, solenoids, correctors	Magnets power supplies	Loop magnets
Controls	Vacuum Pumps	Loop magnet power supplies
Cryogenic system	Beam dump	Loop vacuum pumps
Engineered safety systems relevant to Stage 1	Cooling water system	Engineered safety systems relevant to Stages 1 and 2

The scope of the ERL Stage 2 commissioning activities are as follows: The beam pulse, which is generated accelerated in the SRF gun, will be accelerated to higher energy by the 5-cell SRF cavity, and then transported through the returning loop back to the 5-cell cavity. At the second pass through the 5-cell cavity, the beam pulse will return energy to

the RF field and decelerate. This beam pulse will then be transported to the beam dump at lower energy and the next beam pulse will enter the 5-cell cavity. The commissioning will be carried out in accord with safety-related assumptions in the Safety Assessment Document (SAD) and planned activities will not violate the limits set by the ERL Accelerator Safety Envelope (ASE). During commissioning, low current beam will be used initially, and once this low current beam is controlled, current will be increased. Once moderate current beam is controlled, fault studies will be performed using current levels that create measurable levels of secondary radiation. Fault studies will not be performed with high current since radiation measurements can be extrapolated. After fault studies are completed and controls are confirmed, other commissioning objectives will be accomplished.

Internal Readiness Review (IRR)
Energy Recovery Linac (ERL)

December 15-16, 2014

BROOKHAVEN NATIONAL LABORATORY

a passion for discovery

Office of Science

Purpose of the Internal Readiness Review

Team was charged by C-AD Management to:

- Provide an independent evaluation of the ERL's Readiness for High Current/High Energy Commissioning to include the Full Loop and 5-Cell Cavity
- Identify additional actions needed for a successful Accelerator Readiness Review (ARR)
- Identify actions (recommendations) that would enhance the ERL Readiness Review Process

Team Members

Chuck Schaefer	**Team Lead** SAD, ASE, USIs, ARMs, Radiation Protection, Fault Studies
Chuck Gortakowski	Past Actions and Reviews, Quality Assurance, Configuration Management, Documents and Records, CAS, Drawings
Walt Czekaj	Conventional Safety, ODH, Lasers, LOTO
Peter Ingrassia	Conduct of Operations, Operator Training/Qualification, Commissioning Plan, Commissioning Sequence, Fault Studies
Asher Etkin	Personal Protection Systems: Interlocks for ACS, ODH, Laser, Magnets
Charles Theisen	Controls System
Henry Kahnhauser	Radiological Shielding
Pat Sullivan	DOE-BHSO Observer

Review Process

- Document Review
- On-site review of documentation
- C-AD staff presentations
- Staff discussions
- Work observation

Findings

Pre-Start – Issues that should be addressed prior to the ARR

Post-Start – Items that will not be completed prior to the ARR. The IRR team recommends that these issues be identified to the ARR, and the plan and schedule for completing the actions provided to and discussed with the ARR Team

Recommendations – Items that the IRR team believe would significantly enhance the ARR process

Note: Open actions items that are already being formally tracked in C-AD's FATS or by the RSC are not included in this report.

SAD, ASE, USIs
Chuck Schaefer

- **Observations**
  - There have been no recent changes to the SAD dated August 2011
  - Reviewed several ERL USIs prepared in CY2014 - Okay
  - Reviewed ERL ASE dated June 2012 and commissioning ASE dated April 2013 – Okay
- **Pre-Start Findings**
  - None
- **Post-Start Findings**
  - None
- **Recommendations**
  - None

Past Reviews, QA, Configuration Management, CAS
Chuck Gortakowski

- **Observations**

  The system is well established. It is being managed by individuals that fully understands the requirements and the documented system that is in place.

  - Many internal procedures have been generated to ensure compliance.
  - Procedures have forms attached to the procedures when forms are needed.
  - Training system is well documented and managed by the training manager.
  - Assessments are being conducted to ensure a compliant system.
  - ATS is being used to ensure action items are completed.

Past Reviews, QA, Configuration Management, CAS
Chuck Gortakowski

- **Pre-Start Findings**

ATS item 7969.1.18 was closed using two check lists that were attached to the action item.

- One was for Laser configuration checklist,
- the second checklist was called Task Checklist

Finding:

- There was no objective evidence that the checklists are part of the configuration control system, as there was no objective evidence that the document had all the required information on them.
  - The checklists will need to become an official document prior to starting.

Past Reviews, QA, Configuration Management, CAS
Chuck Gortakowski

- **Post-Start Findings**
  - Form 18.5.9.a requires a signature for the Operations Coordinator. A review of the organizational chart indicated the position was changed to Operational Specialist. Titles should be consistent to avoid confusion.

Past Reviews, QA, Configuration Management, CAS
Chuck Gortakowski

- **Recommendations**
  - The organization is in the process of cross training a back up for the operations Specialist. Once a second person is trained, it is recommended this person be added to the organization chart to clearly indicate a second approved person.
  - ATS 7969.1.3 Document the rationale for placement of the interlocking monitors. Prestart finding from IRR-ERL April 3-4 2014
    - A Memo was used to document the rational for the placement of Chipmunks. All the pages of the Memo did not have any indication to make it clear they were all part of the same document.
    - Recommendation is to make these type of documents into something more official. A report format should be used.

Past Reviews, QA, Configuration Management, CAS
Chuck Gortakowski

- **Recommendations**

3. Windchill is a new system that is being used for drawing and design control. It has been in the works for about two years. Several of the drawings that were reviewed were very recently incorporated into the system.

- **It is recommended that more effort be made to get all drawing and ECN into the windchill, and get it fully implemented. The Windchill project seems to be something that is taking a long time to get fully implemented. The sooner it is implemented, the sooner the organization will see the benefit.**
- **The current system is only using a Engineering Change Notice (ECN). It is recommended that a review be conducted to look into adding Engineering Change Requests (ECR) to the process.**

Control Systems
Charles Theisen

- **Observations**
  - Control room and rack area neat and orderly
  - All items from 1st IRR resolved
  - Original Lines of Inquiry reviewed
    (Including cyber security and software QA)
  - Migration into Windchill will take time
  - Open items well understood

Control Systems
Charles Theisen

- **Pre-Start Findings**
  - MPS Modifications – Defined, Implemented, Tested
  - Profile Monitors/Low Level Controls Software
  - Install and Integrate New Cameras
  - Beam Position Monitors/Low Level Controls Software
  - Beam Loss Monitors/Low Level Controls Software
  - DCCT PXIe System

- **Post-Start Findings**
  - Graphical Displays For BPMs, BLMs (HL Software)
  - Dump Loss Distribution Monitor (HL Software)

Control Systems
Charles Theisen

- **Recommendations**
  - Develop plan to address solenoid modifications

Operator Training / Qualifications

Peter Ingrassia C-AD

- **Observations**
  - ERL operations and support staff have been trained in procedures relevant to the ERL low power gun to dump test.
  - Procedures relating to the Conduct of Operations have been trained. Shift leaders JTA's reflect training in relevant procedures including OPM 10.1 – Occurrence Reporting.
  - Some procedures for the full loop test including the 5 cell Rf cavity are still evolving (no surprise).
- **Pre-Start Findings**
  - Finalize full loop test procedures and train – for example 18.5.NN "ERL: Loop Commissioning Sequence (D. Kayran)

Commissioning Plan and Sequence

Peter Ingrassia C-AD

- **Observations**
  - ARDD (Accelerator Research and Development Division) views the Commissioning Sequence Procedures as embodying the Commissioning Plan
  - OPM 18.5.8 ERL: Gun-to-Dump Commissioning Sequence is well thought out and contains numerous hold points that require RSC Chair fault study review before commissioning can continue.
  - OPM 18.5.NN ERL: Loop Commissioning Sequence is modeled after OPM 15.5.8 and shows the same conservative approach.
  - Commissioning sequence is adequate to support commissioning including fault studies
  - **Recommendation**
  - Implement the ARR recommended “opportunity for improvement” – that is – a list of engineered safety systems (critical devices) made easily available to operators/ shift leaders.

Fault Studies

Peter Ingrassia C-AD

- **Observations**
  - ERL relies on C-AD OPM 9.1.9 “Fault Study Procedure” for guidance when conducting fault studies.
  - OPM 9.1.9 and OPM Att 9.1.9.b (Maintaining data in Logbooks) both require 3 year review.
  - OPM 9.1.9 paragraph regarding control of fault study logs is out of date -- fault study logs not controlled by MCR.
- **Pre-Start Findings**
  - Update, and review both OPM 9.1.9 and Att 9.1.9.b.

Conduct of Operations

Peter Ingrassia C-AD

- **Observations**
- **OPM 2.5.6 "Commissioning Accelerator Safety Envelope and Supports for ERL Low Power Testing paragraph 5.10.7 says**
  - *The ERL Shift Leader or designee must qualify each operator and other staff approved by ERL management to perform sweeps to enable ERL enclosure for beam by observing their performance in executing the Sweep procedure*
  - ERL allows designated individuals to train other designated individuals to sweep (search and secure) the ERL beam enclosure.
  - ERL Control Room Technicians (trainers?) JTA's DO NOT reflect training in good sweep practices – OPM 4.56 "Procedure for Sweeping Primary Beam Enclosures" as is required for all sweepers
- **Pre-Start Findings**
  - Train all ERL sweepers must be trained in OPM 4.56
  - http://www.cadops.bnl.gov/AGS/Operations/Training/CAD_Approved_Sweepers.pdf

Conduct of Operations

Peter Ingrassia C-AD

- **Observations**
- **OPM 2.5.6 "Commissioning Accelerator Safety Envelope and Supports for ERL Low Power Testing paragraph 5.10.10 says**
  - *The ERL Shift Leader must re-sign the RSC checklist if more than 7 days elapses between sequential low-power beam tests after checking that other signatures on the list remain valid.*
  - **The requirement is reasonable yet easily forgotten.**

- **Pre-Start Findings**
  - Consider softening the requirement or implement a requirement that is less easily missed or forgotten.

Conduct of Operations

Peter Ingrassia C-AD

- **Observations**
- **OPM 18.3.2 "Response to ODH Alarms" describes operator actions in response to an ODH condition at ERL**
  - The procedure does not appear to address the condition where one PASS division alarms and the other does not (equipment failure).

- **Recommendation**
  - Consider adding instructions for responding to "single division PASS ODH alarms.

Conduct of Operations

Peter Ingrassia C-AD

- **Observations**
- ERL SRF Gun Low Power Beam Test is governed (?), in part, by Work Permit SS2014, Work Order #160. In doing so ERL has set a precedent for commissioning by including Enhanced Work Planning in beam commissioning activities.
- The work plan "package" found in the control room includes technical background material about ERL, as well as formal and informal procedures. examples
  - OPM ?? "Setup Procedure for ERL ICT Interlock" – formal procedure not in procedure manual as of 13:45 hrs. 16 December
  - MPS check off list (Draft) – intent is to fill out prior to each operating cycle.
- The motivation for employing enhanced work planning could be interpreted as a means of permitting the use procedures that have not gone through the procedure review process.
- Pre-Start Finding.
  - Determine which informal procedures to make Temporary Procedures in order to allow for review and evolution.
  - After the determination – use the Temporary Procedure Process.
  - Locate previously completed MPS checklists.

Conduct of Operations
Peter Ingrassia C-AD

- **Observations**
  - ERL construction is limited by availability of C-AD labor resources.
  - Resolution of equipment problems during ERL commissioning will be limited by C-AD labor resources – especially when commissioning occurs concurrent with RHIC Operation.
  - Owing to the capacity of the Helium plant, ERL plans to operate for short two day (?) periods weekly. ERL equipment problems during periods of operation will create time pressure for workers especially during periods of RHIC operation.
- **Pre-Start Findings**
  - Modify Shift Operations Organization Charts OPM 2.1 attachment 8.1 AND OPM 18.2 Attachment 8.1 (as well as the procedures) in order to require the ERL shift leader to contact the Operations Coordinator in the RHIC MCR when labor is required during periods of RHIC operations OR the Maintenance Coordinator during Maintenance periods during the RHIC Operating Cycle.
  - Make the Maintenance Coordinator aware of all such labor requests.
- **Recommendations**
  - Relocate ERL commissioning/operation to RHIC MCR to facilitate interaction/integration

ARMs, Radiation Protection, Fault Study Plans
Chuck Schaefer

- **Observations**
  - C-AD is heavily relying on Chipmunks to help ensure the department's shielding policy is met
  - Eleven (11) ARMs are deployed, Nine are Interlocking
  - Audible alarms annunciate in the ERL Control Room
  - Some ARMs may not be optimally sited
  - An initial Fault Study at ~ 1 W was conducted in late November
  - A fault study beam power threshold (to avoid machine damage) has not been formally defined (e.g., 10 W, 20 W, etc.)
  - There are adequate RCT staffing levels and survey equipment to support ERL commissioning
  - A commissioning sequence has been prepared that contains radiological review hold points

ARMs, Radiation Protection, Fault Study Plans
Chuck Schaefer

- **Pre-Start Findings**
  - Determine a maximum fault study beam power and ensure this is clearly documented in the Commissioning Sequence and Fault Study Plans
  - Formally verify that the combination of project radiological shielding and Chipmunks will meet the department's shielding policy
- **Post-Start Findings**
  - None
- **Recommendations**
  - None

Interlocks
Asher Etkin

- **Observations**
  - 1 - The interlock systems for Access Control, ODH and Lasers have been in use for several years with no unsafe failures.
  - 2 – The interlock for the six dipoles in the transport from gun to dump was reviewed, implemented, and certified.

- **Pre-Start Findings**
  - 1 – Document and implement a configuration control procedure for all critical magnets.
  - 2 – Determine how six interlocked magnets are tuned.

Interlocks
Asher Etkin

- **Pre-Start Findings (cont.)**
  - 3 – Validate the exclusion of the dump line Quad, extraction correctors and ring dipoles from the MPS.
- **Post-Start Findings**
  - None
- **Recommendations**
  - None

Radiation Shielding
Henry Kahnhauser

- **Observations**
  - Initial bulk shielding calculations are based upon data from NCRP 144 - Okay
  - There are plans to add additional shielding inside the ERL enclosure (e.g., near the beam dump and existing concrete block by the Gun)
  - Verified that cracks/seams have been shielded as per RSC requirements
  - No commitment to conduct fault studies at energies > 10 MeV could be found. Examination of shielding integrity needs to be performed at beam energies that will produce neutrons (i.e., 10 – 20 MeV).
  - Not all radiological shielding ECNs have been approved.

Radiation Shielding
Henry Kahnhauser

- **Pre-Start Findings**
  - Complete the installation of planned supplemental shielding within the ERL enclosure
  - Ensure that all ECNs related to shielding have been approved
  - Ensure that the commissioning sequence contains a commitment to conduct fault studies at beam energies that will produce neutrons
  - Complete the Gun-to-Dump ARR Post Start action 2: “To assure availability of the shielding calculations to others for continuity of operations, the preparation of a comprehensive shielding assessment for the ERL should be prepared and made readily available”
- **Post-Start Findings**
  - None
- **Recommendations**
  - None

Conventional Safety / Stairs, Railings, Roof Access

W. Czekaj

- **Observations**
  - A detailed review of ERL loop area, control room and facility exterior was conducted.
    - Notable improvements in life safety postings and process pipe labeling.
    - Commendable substitution of fabricated steel decking structure for previous wood observation platform.
  - A review of ERL ODH calculations associated with USI determination on 4/22/14 and supporting documentation was conducted.
    - There are some discrepancies in the description of control systems in place.
  - Interviews with ERL and C-AD staff were held.
    - Staff are invested in safety aspects of operation and management and displayed depth and breadth of knowledge.

Conventional Safety / Stairs, Railings, Roof Access

W. Czekaj

- **Pre-Start Findings**
  - None
- **Post-Start Findings**
  - None
- **Recommendations**
  - None

INSTRUMENT READINESS REVIEW REPORT
FOR
ENERGY RECOVERY LINAC FULL LOOP COMMISSIONING

December 15-16, 2014

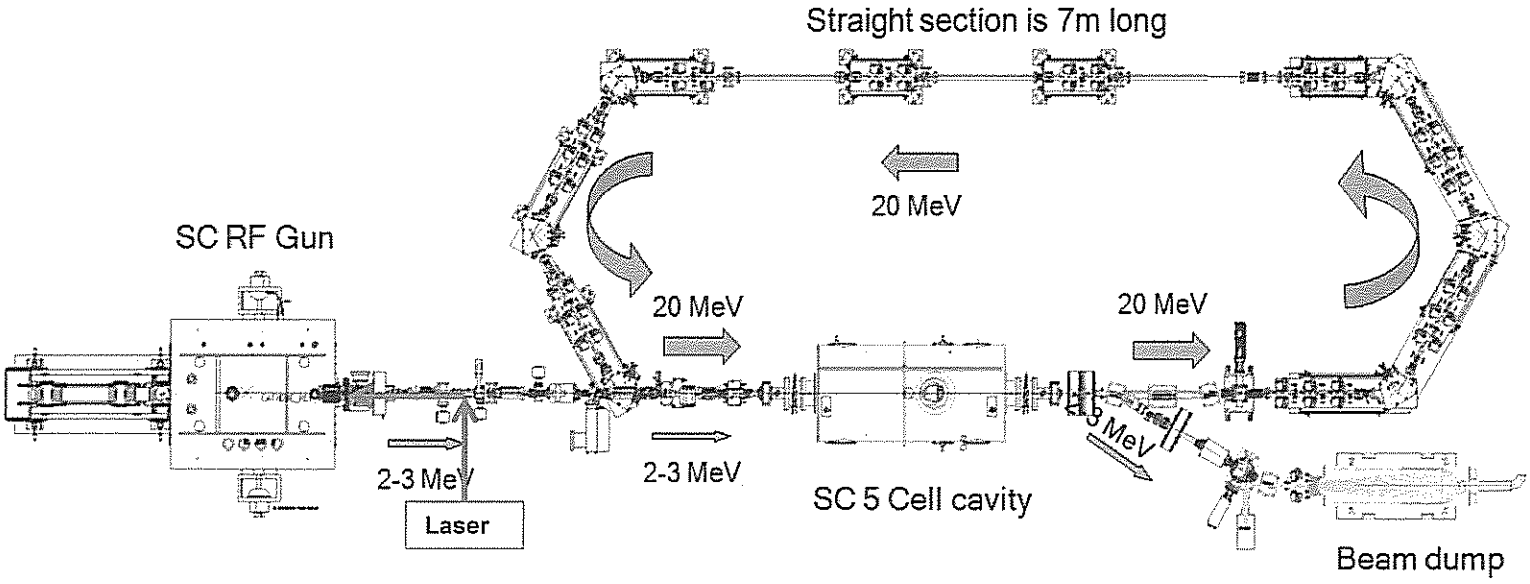

BROOKHAVEN
NATIONAL LABORATORY

ERL Full Loop Commissioning IRR Team

LEAD	Chuck Schaefer	1/13/15 DATE
MEMBER	Walt Czekaj	1/13/15 DATE
MEMBER	Asher Etkin	1-13-2015 DATE
MEMBER	Chuck Gortakowski	1/13/2015 DATE
MEMBER	Henry Kahnhauser S. Coleman for H. Kahnhauser	1/13/2015 DATE
MEMBER	Peter Ingrassia	1/13/2015 DATE
MEMBER	Charles Theisen	1/13/2015 DATE

Table of Contents

Executive Summary 1
Results 2
1.0 Safety Assessment Document (SAD), Accelerator Safety Envelope (ASE), and Unreviewed Safety Issue (USI) Process 2
2.0 Alarming and Interlocking Radiation Monitors, Radiation Protection, and Fault Study Plans 3
3.0 Conduct of Operations (CONOPS) 4
4.0 Radiation, Laser, ODH, and Magnet Interlocks 6
5.0 Controls System, Cyber Security 7
6.0 Conventional Safety/Stairs, Railings, Roof Access, Cranes 9
7.0 Radiological Shielding 10
8.0 Past Actions and Reviews, Quality Assurance, Configuration Management, Documents and Records, CAS, Drawings 11
Summary of Pre-Start and Post-Start Findings 13
Appendix A: Charge Letter 16
Appendix B: Agenda 19

Executive Summary

An Instrument Readiness Review (IRR) has been conducted for the high-current high-energy commissioning of the Energy Recovery Linac (ERL), including the full loop and 5 cell cavity per the Charge Letter (see Appendix A) from the Collider-Accelerator Department (C-AD) Research and Development Division Head. The objective of the IRR was to provide assurance that high-current high-energy commissioning of the ERL can be conducted in a safe and environmentally sound manner.

The IRR Team consisted of seven BNL staff. The site visit portion of the IRR emphasized a performance-based approach with a focus on field activities that included walk-downs and inspections of systems and structures, inspections of safety systems, and interviews and roundtable discussions with staff. A set of Lines of Inquiry (LOIs) was developed and used to guide much of the review.

For each topical area, pre-start and post-start findings are presented along with recommendations (opportunities for improvements). The IRR Team identified 21 pre-start findings, 2 post-start findings, and 10 recommendations. Pre-start findings should be resolved prior to the on-site portion of the Accelerator Readiness Review (ARR) activities. Post-start findings may be resolved in a reasonable timeframe after the ARR activities and should be entered and tracked to completion in a corrective action tracking system. Recommendations are offered as representative of best practices and are left to C-AD line management for resolution, as appropriate.

The previous Gun-to-Dump ARR Team required an independent review of ERL radiological shielding as a pre-start action for beam-to-dump commissioning. The path to completing this action consists of the shielding review conducted as part of this IRR, and also a separate verification (using the FLUKA shielding code) by a shielding expert external both to CAD and the IRR Team. The results of the FLUKA analysis are not part of this IRR.

Overall, it was determined that there are still a modest number of tasks that need to be completed prior to declaring the facility fully ready for high-energy high-current commissioning. Many of these are already being worked and several are expected to be completed shortly. The team believes that ERL is well on its way to being ready for the ARR within a couple of months.

Results

1.0 Safety Assessment Document (SAD), Accelerator Safety Envelope (ASE), and Unreviewed Safety Issue (USI) Process

1.1 Observations

There have been no recent changes to the SAD, dated August 2011. Several USI screenings related to ERL have been prepared in 2014. These were reviewed and found to be acceptable.

The ERL ASE, dated June 2012, and Commissioning ASE, dated April 2013, were reviewed and found to be compliant with Standards-Based Management System (SBMS) requirements and consistent with the SAD.

1.2 LOIs

1. Ensure assumptions in the safety analysis are configuration managed.	Adequate
2. Validate that shielding statements in the ASE are accurate.	Adequate
3. Ensure fault conditions and assumptions are reflected in the SAD and procedures.	Adequate
4. Validate that the ASE is up to date, consistent with SBMS requirements, and updates are reflected in procedures and USIs.	Adequate
5. Verify that specifications used in shielding analyses are valid.	Adequate
6. Verify Radiation Safety Committee actions are addressed or being tracked to completion.	Adequate
7. Verify ASE credited controls are understood by operators and configuration managed.	Adequate
8. Verify that Operators have been trained on the facility safety basis.	Adequate
9. Check the status of the Commissioning Plan, Commissioning Sequence, and Commissioning Fault Study Plans.	Adequate
10. Verify system descriptions in SAD.	Adequate
11. Check bulk shielding thicknesses against the drawing specifications.	Adequate
12. Verify there are enough Operators and Radiological Control support staff to meet planned commissioning schedule.	Adequate

1.3 Pre-Start Findings

None

1.4 Post-Start Findings

None

1.5 Recommendations

None

2.0 Alarming and Interlocking Radiation Monitors, Radiation Protection, and Fault Study Plans

2.1 Observations

C-AD is heavily relying on Chipmunks to help ensure the effectiveness of its radiation protection program. A total of eleven (11) Chipmunks are deployed in and around ERL, nine (9) of which are interlocking. Audible alarms annunciate in the ERL Control Room.

An initial Fault Study at ~1 W was conducted in late November. A fault study beam power threshold (to avoid machine damage) has not been formally defined (e.g., 10 W, 20 W, etc.).

There are adequate Radiological Control Technician (RCT) staffing levels and survey equipment to support ERL commissioning. A commissioning sequence has been prepared that contains adequate radiological review hold points.

2.2 LOIs

1. How many Chipmunks are required to support ERL commissioning, and are they calibrated and in place?	Adequate
2. What is the process for determining Chipmunk placement, and is this documented?	Adequate
3. Verify how Chipmunks are configuration controlled.	Adequate
4. Verify that C-AD has a process for controlling and changing alarm and interlock set points.	Adequate
5. Verify that Chipmunk alarms are displayed in the ERL Control Room.	Adequate
6. Has C-AD validated the Chipmunk dose rate displays in the ERL Control Room?	Adequate
7. An appropriate number of trained and qualified RCTs are available to support commissioning.	Adequate
8. An area monitoring plan using passive TLDs exists.	Adequate
9. As-built ERL enclosure bulk shielding is verified to match the dimensions prescribed on engineering drawings, and the shield design drawings are current, approved and under configuration control.	Adequate

2.3 Pre-Start Findings

2.3.1 Determine a maximum fault study beam power and ensure this is clearly documented in the Commissioning Sequence and Fault Study Plans.

2.3.2 Formally document that the combination of project radiological shielding, posting, Chipmunk area radiation monitors and dose goals will meet the department's shielding policy.

2.4 Post-Start Findings

None

2.5 Recommendations

None

3.0 Conduct of Operations (CONOPS)

3.1 Observations

The Accelerator Research and Development Division (ARDD) views the Commissioning Sequence Procedures as embodying the Commissioning Plan. OPM 18.5.NN, *ERL: Loop Commissioning Sequence*, a work in progress, is modeled after OPM 18.5.8 and shows the same conservative approach. The Commissioning sequence is adequate to support commissioning, including fault studies. OPM 9.1.9, *Fault Study Procedure*, is beyond the C-AD's required three-year review cycle.

ERL shift leaders and control room technicians have been trained in the appropriate emergency procedures and the local emergency plan.

The CONOPS Matrix is prepared and being maintained. Implementing procedures in the CONOPS Matrix have been prepared and approved. Operators have been trained on procedures.

Job Training Assessments (JTAs) have been prepared for all positions. OPM 4.56 training does not appear on JTAs of workers who perform sweeps.

ERL construction and commissioning is limited by availability of C-AD labor resources. ERL commissioning during operation of the Relativistic Heavy Ion Collider (RHIC) will result in competition for the same labor resources.

The ERL Superconducting Radiofrequency (SRF) Gun Low Power Beam Test is governed, in part, by Work Permit SS2014, Work Order #160. As such, ERL has set a precedent for commissioning by including enhanced work planning in beam commissioning activities.

The work plan (package) in the ERL control room includes both formal and informal procedures. The motivation for employing enhanced work planning could be interpreted as a means of permitting the use of procedures that have not gone through C-AD's procedure review process. These informal procedures should be made into Temporary Procedures.

3.2 LOIs

1. Verify that a Commissioning Plan has been prepared	Adequate
2. Verify that technical and operations procedures that support commissioning have been prepared and approved	Adequate after implementation of pre-start finding
3. Verify that procedures have been validated	Adequate
4. Verify Local Emergency Coordinator effectiveness for Incident Command from the ERL Control Room	Adequate
5. Verify a CONOPS Matrix has been prepared and approved	Adequate
6. Verify that an operations/commissioning organization has been established consistent with the C-AD organization	Adequate
7. Verify that implementing procedures cited in the Matrix have been prepared and approved	Adequate
8. Verify Operators have been trained on procedures	Adequate after

	implementation of pre-start finding
9. Verify that an ERL operations and qualification program has been established	Adequate
10. Verify JTAs for all positions have been prepared	Adequate
11. Verify that a Control Room staffing plan has been established	Adequate
12. Verify R2A2s for commissioners	Adequate

3.3 Pre-Start Findings

3.3.1 Finalize full loop test procedures and train ERL staff, e.g., OPM 18.5.NN, *ERL: Loop Commissioning Sequence.*

3.3.2 Train all who perform ERL search and secure (sweep) in OPM 4.56, *Procedure for Sweeping Primary Beam Enclosures* and update JTAs.

3.3.3 Modify the Shift Operations organizational charts, OPM 2.1, Attachment 8.1 and OPM 18.2, Attachment 8.1, as well as the procedures, to require the ERL Shift Leader to contact the Operations Coordinator in the RHIC Main Control Room (MCR) when labor is required during periods of RHIC operations or the Maintenance Coordinator during maintenance periods of the RHIC Operating Cycle.

3.3.4 Review and revise, as needed, OPM 9.1.9, *Fault Study Procedure,* to bring it within the required three-year review cycle.

3.3.5 Determine which informal procedures to make into Temporary Procedures and convert them using the C-AD's temporary procedure process.

3.4 Post-Start Findings

None

3.5 Recommendations

3.5.1 Consider implementing the ARR-recommended "opportunity for improvement" to develop a list of engineered safety systems (critical devices) and make it easily available to operators and shift leaders.

3.5.2 Consider performing an emergency response "scripted" drill with ESSHQ Division members present to critique the performance of the ERL staff. Determine whether ERL response is sufficiently integrated with other C-AD operations groups, e.g., Collider-Accelerator Support (CAS).

3.5.3 Consider relocating ERL commissioning and operation to the RHIC MCR to facilitate interaction and integration.

3.5.4 Consider adding response instructions to OPM 18.3.2, *ODH Alarms* for the case where only one PASS division annunciates the alarm.

3.5.5 The ERL Commissioning ASE requires the ERL Shift Leader to re-sign the RSC checklist if more than 7 days elapses between sequential low-power beam tests after checking that other signatures on the list remain valid. C-AD should consider softening this requirement or implementing it in a way that is less easily missed or forgotten.

4.0 Radiation, Laser, ODH, and Magnet Interlocks

4.1 Observations

The interlock systems for Access Controls, ODH, and Lasers have been in use for several years with no unsafe failures. The Personnel Protection System (PPS) is being recertified every 6 months, but a recently-approved waiver extended the current recertification period to 8 months.

The interlocks for the six dipole magnets in the transport from gun to dump were reviewed, implemented, and certified.

4.2 LOIs

1. Verify radiation interlocks are fail safe	Adequate
2. Verify critical devices are controlled by a fail-safe interface to the interlock system	
3. Verify the interlock system requires the enclosure to be searched and secured prior to enabling beam	Adequate
4. Verify that interlock system components are labeled or readily identifiable	Adequate
5. Verify that an appropriate entry control program has been established	Adequate
6. Verify that periodic testing is being performed as required by the BNL Radiological Control Manual	Adequate
7. Verify that the interlock system has been placed under configuration control	Adequate after implementation of pre-start finding
8. Verify that interlock design documentation has been placed under configuration control	Adequate

4.3 Pre-Start Findings

4.3.1 Prepare, approve, and implement a configuration control procedure for all critical magnets.

4.3.2 Determine how the six interlocked dipole magnets will be tuned.

4.3.3 Validate the exclusion of the dump line quadrupole magnet, extraction correctors, and ring dipole magnets from the Machine Protection System (MPS).

4.4 Post-Start Findings

None

4.5 Recommendations

None

5.0 Controls System, Cyber Security

5.1 Observations

The ERL Control Room and adjacent rack area were neat, clean, and orderly. All open items from the previous IRR have been satisfactorily resolved. The original Lines of Inquiry were reviewed once again. All Controls findings seem to be well understood and should not pose a schedule threat.

Perhaps one area of concern is the migration into the new Windchill database. This is a manpower intensive effort, and it will take some time before an efficient system is realized.

5.2 LOIs

1. Verify wiring/cabling for the controls hardware meets code	Adequate
2. Validate process for managing configuration of computer software controls	Adequate
3. Ensure necessary cyber security requirements are met pertaining to control system networks	Adequate
4. Ensure necessary training is in place for personnel that operate, test and maintain the control system	Adequate
5. Verify alarm set point configuration control	Adequate
6. Verify wiring/cabling documentation and configuration control for controls hardware	Adequate
7. Assess control system reaction to a power outage	Not Fully Investigated
8. Check that alarm response is clearly defined	Adequate
9. Review list of open items	Adequate
10. Review tools for controlling the release of controls system drivers and applications	Adequate
11. Examine controls reaction to a power outage	Not Fully Investigated
12. Examine and concur on process to change/modify hardware and software related to controls during commissioning	Adequate
13. There is a plan that addresses cyber security on a site-wide basis and specifically for accelerator controls	Adequate
14. The cyber security risk assessment for accelerator controls adequately identifies threats and vulnerabilities specific to the operating environment	Adequate
15. The cyber-risk assessment for accelerator controls adequately identifies risks and counter measures to reduce risk to an acceptable level	Adequate
16. There is an authority to operate the system used to control accelerator functions within acceptable risks	Adequate
17. The cyber security plan incorporates recommended practices and protocols	Adequate
18. There are adequate personnel resources to maintain the cyber security program and processes	Adequate
19. There are adequate fiscal resources to maintain the cyber security equipment through near-term software and hardware	Adequate

upgrades	
20. There is adequate infrastructure to maintain and support cyber security for accelerator controls	Adequate
21. Software QA supports activities related to commissioning	Adequate
22. The development of accelerator controls is governed by applicable standards	Adequate
23. Accelerator controls software has accurate configuration information from users/owners for device control	Adequate
24. There are resources that allow controls software to be tested before implementation	Adequate
25. There is an adequate user feedback mechanism to resolve software issues	Adequate
26. Accelerator controls software is configuration managed	Adequate
27. There are adequate personnel resources to maintain the accelerator controls software applications	Adequate
28. There is adequate infrastructure to maintain and support accelerator controls software applications	Adequate
29. Software QA supports activities related to commissioning	Adequate

5.3 Pre-Start Findings

5.3.1 Fully define the changes to the MPS necessary for the next phase of testing. This involves some low-level programming within the MPS platform and some higher-level programming in order for it to interface with the Controls system. In addition, the MPS test procedure will need to be updated.

5.3.2 Install remaining Profile Monitors. Develop low-level Controls software necessary for operations.

5.3.3 Install and integrate new high-speed instrumentation cameras.

5.3.4 Install remaining Beam Position Monitors. Develop low-level Controls software necessary for operations.

5.3.5 Install remaining Beam Loss Monitors. Develop low-level Controls software necessary for operations.

5.3.6 Complete the programming and installation of the DCCT PXIe monitoring system. Develop low-level Controls software necessary for operations.

5.4 Post-Start Findings

5.4.1 Complete graphical display user interfaces for Beam Position Monitors and Beam Loss Monitors.

5.5 Recommendations

5.5.1 Consider developing a detailed plan and schedule to address upcoming modifications to the super conducting solenoid.

6.0 Conventional Safety/Stairs, Railings, Roof Access, Cranes

6.1 Observations

A detailed review of ERL Loop area, control room and facility exterior was conducted. Life safety postings and process pipe labeling identified in prior reviews has been updated to current standards. The replacement of a wood observation platform with fabricated steel structure is a good example of the maturation of the facility.

A review of ERL ODH calculations and supporting documentation associated with USI determinations was conducted. In some cases updated information was not clearly differentiated from outdated information contained in the same document. This does not constitute a finding as the facility is properly equipped but does cause confusion during document reviews. Staff members are very knowledgeable regarding current configuration of equipment and are able to explain apparent contradictions.

Interviews with CAD and ERL staff were conducted to verify training and assess safety culture. Staff members are invested in safety aspects of operation and management and displayed depth and breadth of knowledge. Training assignments include predictable hazards and are specific to facility and function of workers. Processes such as electronic logging and ERL Operations homepage information sharing are good examples of innovations to improve safe operations.

6.2 LOIs

1. Assess adequacy of procedures and practices related to fall protection, elevated work, material handling, compressed gas storage and use, use of cryogens, fire safety, life safety and laser safety	Adequate
2. Determine whether prior safety committee actions have been addressed and closed out	Adequate
3. Verify training for expected hazards that workers may encounter in ERL work spaces.	Adequate

6.3 Pre-Start Findings

None

6.4 Post-Start Findings

None

6.5 Recommendations

None

7.0 Radiological Shielding

7.1 Observations

Bulk shielding calculations performed in 2006 were based upon data from NCRP Report 144, *Radiation Protection for Particle Accelerator Facilities*. There are plans to add additional shielding inside of the enclosure (e.g., near the beam dump and adjacent to the existing concrete block by the Gun).

Horizontal cracks between shield blocks and vertical seams have been shielded as per Radiation Safety Committee requirements.

There are no commitments to conduct beam fault studies at energies that produce neutrons (i.e., > 10 MeV). Shielding integrity should be verified, if possible, with neutrons as well as photons.

Not all radiological shielding Engineering Change Notices (ECNs) have been formally approved.

7.2 LOIs

None provided

7.3 Pre-Start Findings

7.3.1 Complete the installation of planned supplemental shielding within the ERL enclosure.

7.3.2 Ensure that all ECNs related to radiological shielding have been approved and are available within Windchill.

7.3.3 Ensure that the Commissioning Sequence contains a commitment to conduct fault studies at beam energies that will produce neutrons.

7.3.4 Complete the Gun-to-Dump ARR Post-Start Action 2: "To assure availability of the shielding calculations to others for continuity of operations, the preparation of a comprehensive shielding assessment for the ERL should be prepared and made readily available."

7.4 Post-Start Findings

None

7.5 Recommendations

None

8.0 Past Actions and Reviews, Quality Assurance, Configuration Management, Documents and Records, CAS, Drawings

8.1 Observations

The Quality Assurance system is well established. It is being managed by the assigned Quality Manager. The Quality Manager was able to find documents at a moment's notice. The individual is very knowledgeable of the documented system.

There are many internal procedures that have been generated to ensure compliance. The procedures have forms that become part of the procedure and are controlled as attachments. The training system is well documented and managed by the Training Manager and follows the standard BNL format. It was easy to review and search for required training.

There are many assessments being conducted to ensure a compliant system. Some are process focused, while others use higher-level standards, such as ISO 14001, OSHA 18001, effectiveness reviews, and Tier 1 inspections. Action items are tracked in both the institutional and local (family) Assessment Tracking System (ATS). Files are reviewed to ensure compliance prior to closing out actions. Drawings and ECNs are being migrated into a new document control system called Windchill, which is an area that will require some extra effort before it is fully implemented.

ATS item 7969.1.18, "Finish testing the laser system timing controls," was closed using two checklists that were attached to the action item—one was for laser configuration and the second was called Task Checklist. There was no objective evidence that the checklists (which may be re-used) are part of the configuration control system, and there was no objective evidence that the checklists had all the required information on them, such as revision number, owning organization, etc.

8.2 LOIs

None provided

8.3 Pre-Start Findings

8.3.1 Ensure that the laser configuration and laser task checklists are controlled documents and contain all required information.

8.4 Post-Start Findings

8.4.1 Form 18.5.9.a, *ERL Low Power Experimental Configuration Checklist* requires a signature from the Operations Coordinator. A review of the organizational chart indicated that the position title was changed to Operational Specialist. Revise Form 18.5.9.a such that the designation of Operational Specialist is consistent with the organizational chart.

8.5 Recommendations

8.5.1 The organization is in the process of cross-training a back-up for the Operations Specialist. Once a second person is trained, it is recommended this person be added to the organizational chart to clearly indicate a second approved person.

8.5.2 ATS 7969.1.3, "Document the rationale for placement of the interlocking monitors (Pre-start finding from IRR-ERL April 3-4 2014)," was closed on

the basis of a Memorandum. Not all of the pages of the Memorandum were clearly marked to show they were all part of the same document. Consider using a more official format (e.g., Report, Technical Basis Document, etc.) to document decisions that affect the basis of accelerator operations in the area of safety.

8.5.3 Windchill is a new database for drawing and design control. C-AD has been implementing it for about two years. Several of the drawings that were reviewed were very recently incorporated into the system. It is recommended that C-AD expedite moving all drawings and ECNs into Windchill and fully implement it.

8.5.4 The configuration control system only uses ECNs. It is recommended that C-AD consider adding Engineering Change Requests (ECR) to the process. This will allow for the documentation of decisions not to implement certain changes, which will make the system more complete.

Summary of Pre-Start and Post-Start Findings

Table 1
Summary of Pre-Start Findings

Identifier	Review Area	Finding
Pre-Start 1	Fault Study and Commissioning Sequence	Determine a maximum fault study beam power and ensure this is clearly documented in the Commissioning Sequence and Fault Study Plans.
Pre-Start 2	Radiation Protection	Document that the combination of project radiological shielding, posting, Chipmunk area radiation monitors and dose goals will meet the department's shielding policy.
Pre-Start 3	Conduct of Operations	Finalize full loop test procedures and train ERL staff, e.g., OPM 18.5.NN, *ERL: Loop Commissioning Sequence*.
Pre-Start 4	Conduct of Operations	Train all who perform ERL search and secure (sweep) in OPM 4.56, *Procedure for Sweeping Primary Beam Enclosures* and update JTAs.
Pre-Start 5	Conduct of Operations	Modify the Shift Operations organizational charts, OPM 2.1, Attachment 8.1 and OPM 18.2, Attachment 8.1, as well as the procedures, to require the ERL Shift Leader to contact the Operations Coordinator in the RHIC Main Control Room (MCR) when labor is required during periods of RHIC operations or the Maintenance Coordinator during maintenance periods of the RHIC Operating Cycle.
Pre-Start 6	Conduct of Operations	Review and revise, as needed, OPM 9.1.9, *Fault Study Procedure*, to bring it within the required three-year review cycle.
Pre-Start 7	Conduct of Operations	Determine which informal procedures to make into Temporary Procedures and convert them using the C-AD's temporary procedure process.
Pre-Start 8	Interlocks	Prepare, approve, and implement a configuration control procedure for all critical magnets
Pre-Start 9	Interlocks	Determine how the six interlocked dipole magnets will be tuned
Pre-Start 10	Interlocks	Validate the exclusion of the dump line quadrupole magnet, extraction correctors,

		and ring dipole magnets from the Machine Protection System (MPS).
Pre-Start 11	Controls	Fully define the changes to the MPS necessary for the next phase of testing. This involves some low-level programming within the MPS platform and some higher-level programming in order for it to interface with the Controls system. In addition, the MPS test procedure will need to be updated.
Pre-Start 12	Controls	Install remaining Profile Monitors. Develop low-level Controls software necessary for operations.
Pre-Start 13	Controls	Install and integrate new high-speed instrumentation cameras.
Pre-Start 14	Controls	Install remaining Beam Position Monitors. Develop low-level Controls software necessary for operations.
Pre-Start 15	Controls	Install remaining Beam Loss Monitors. Develop low-level Controls software necessary for operations.
Pre-Start 16	Controls	Complete the programming and installation of the DCCT PXIe monitoring system. Develop low-level Controls software necessary for operations.
Pre-Start 17	Radiological Shielding	Complete the installation of planned supplemental shielding within the ERL enclosure.
Pre-Start 18	Radiological Shielding	Ensure that all ECNs related to radiological shielding have been approved and are available within Windchill.
Pre-Start 19	Radiological Shielding	Ensure that the Commissioning Sequence contains a commitment to conduct fault studies at beam energies that will produce neutrons.
Pre-Start 20	Radiological Shielding	Complete the Gun-to-Dump ARR Post-Start Action 2: "To assure availability of the shielding calculations to others for continuity of operations, the preparation of a comprehensive shielding assessment for the ERL should be prepared and made readily available."
Pre-Start 21	Configuration Management	Ensure that the laser configuration and laser task checklists are controlled documents and contain all required information.

Table 2
Summary of Post-Start Findings

Identifier	Review Area	Finding
Post-Start 1	Controls	Complete graphical display user interfaces for Beam Position Monitors and Beam Loss Monitors
Post-Start 2	Records	Form 18.5.9.a, *ERL Low Power Experimental Configuration Checklist* requires a signature from the Operations Coordinator. A review of the organizational chart indicated that the position title was changed to Operational Specialist. Revise Form 18.5.9.a such that the designation of Operational Specialist is consistent with the organizational chart.

Appendix A: Charge Letter

From: Lessard, Edward T
Sent: Monday, October 27, 2014 4:59 PM
To: Gortakowski, Charles; Theisen, Charles; Schaefer, Charles W; Etkin, Asher; Ingrassia, Peter F; Czekaj, Walter; Job, Panakkal; Kahnhauser, Henry F
Cc: Passarello, David J; Lebel, Roy H; Wilke, Jessica R; Hammons, Lee; Kayran, Dmitry; Beavis, Dana; Bergh, Paul J; Reich, Jonathan; Sheehy, Brian; Cirnigliaro, Peter P; Roser, Thomas; Ben-Zvi, Ilan; Jamilkowski, James; Manning, Pamela; Rokni, Sayed H.; Karol, Raymond C; Sullivan, Patrick T (DOE)
Subject: RE: ERL IRR Phase II, December 15 and 16, 2014
Attachments: ERL ARR Report.pdf; ERL IRR Report.pdf; ERL Energy Recovery Commissioning Plan Stage 2.docx; Draft Agenda - ERL IRR 12-15-14 and 12-16-14.docx

Gentlemen:

Please assemble as a team and review preparedness for Phase II of commissioning of ERL. Your expertise and work is greatly appreciated to continue to move this project forward. Below is the charge. A brief commissioning plan and draft agenda for the on-site review are attached.

Thank you again for your continued involvement.

Regards.

Ilan Ben-Zvi
C-AD Accelerator R&D Division Head

Charge

- Perform an independent evaluation of ERL readiness for high-current high-energy commissioning to include the loop and 5 cell cavity
- Identify actions that are needed for a successful Accelerator Readiness Review in December

Please focus on the following areas:

- Areas identified in the Accelerator Safety Order (training, procedures, CAS, AB documents, USIs)
- Records of past reviews, incidents, actions
- Conduct of Operations procedures
- QA (and other assurance systems)
- Interlocking safety systems
- Controls system
- Conventional safety practices such as LOTO
- Configuration Management of Safety Systems

The following table summarizes IRR Team Members, Focus Areas and Counterparts

Charles Schaefer **IRR Team Lead**	SAD, ASE, USIs, Activities and Records Counterparts: D. Kayran, E. Lessard
Chuck Gortakowski	Past Actions and Reviews, Quality Assurance, Configuration Management, Documents and Records, CAS, Drawings Counterpart: D. Passarello
Charles Theisen	Controls System Counterpart: J. Jamilkowski
Peter Ingrassia	Conduct of Operations, Commissioning Plan, Commissioning Sequence, Fault Studies Counterparts: L. Hammons, D. Kayran, D. Beavis
Charles Schaefer	Alarming and Interlocking Area Radiation Monitors, Interlocking Magnets Counterparts: D. Beavis, J. Reich
Charles Schaefer	Radiation Protection and Fault Study Plan Counterparts: D. Beavis, P. Bergh
Walter Czekaj	Conventional Safety, Stairs, Railings, Roof Access, Crane Counterpart: P. Cirnigliaro, L. Hammons
Henry Kahnhauser	Radiological Shielding Counterpart: D. Beavis
Asher Etkin	Personal Protection Systems: Interlocks for ACS, ODH, Laser, Magnets Counterparts: J. Reich, B. Sheehy

The review process should consider:

- Lines of Inquiry (see attached for links)
- Document reviews
- Counterpart discussions
- Observations

Please report the following action items:

- Pre-Start – actions that should be addressed prior to the Accelerator Readiness Review
- Post-Start – actions that will not be completed prior to the Accelerator Readiness Review; the IRR team should recommend that these actions be identified to the ARR, and the plan and schedule for completing the actions provided to and discussed with the Accelerator Readiness Review team
- Opportunities for Improvement – action that the IRR team believes would significantly enhance the Accelerator Readiness Review process

Please prepare a report as follows:

Contents

- Brief discussion of the Findings and Observations within each area of the IRR
- Brief comments on opportunities for improvement
- Pre-start and post-start action items and opportunities for improvement

Schedule

- Please prepare a draft report drafted within 7 to 11 days following the on-site work
- Please submit the draft to counterparts for factual accuracy and comments
- Please submit the final report to C-AD management within approximately one week after comments received

Appendix B: Agenda

IRR for ERL High Current - High Energy Commissioning December 15 and 16, 2014
Large Conference Room (LCR), Bldg. 911, 2nd Floor

AGENDA

Monday December 15, 2014 (DAY 1)

Conference Room	Time	Description	Lead (s)
LCR	8:30 – 9:00	IRR Team Meeting	C. Schaefer
LCR and ERL	9:00 – 9:15	Welcome & Introductions Safety Briefing	I. Ben-Zvi E. Lessard
	9:15 – 9:30	Readiness Status and Look Ahead	I. Ben-Zvi
	9:30 – 9:45	Past Action Items	D. Passarello
	9:45 – 10:00	Commissioning Sequence	D. Kayran
	10:00 – 10:15	Configuration Management of Credited Controls	R. Karol
	10:15 – 10:30	Coffee Break	
LCR	10:30 – 10:45	Radiological Issues - Shielding	D. Beavis
LCR	10:45 – 11:00	Training Status and New Procedures. E.g., Response Magnet Interlocks; Range of Trombone	L. Hammons
LCR	11:00 – 12:00	Tour of the ERL Area	
	12:00 – 1:00	Lunch Break	
	1:00 – 5:00	Team Interviews, documents & records reviews, system walk-downs, work observations, discussions, breakout sessions	Team Members & Counterparts

Tuesday December 16, 2014 (DAY 2)

Conference Room	Time	Description	Lead (s)
LCR	8:30 – 9:00	IRR Team Meeting	C. Schaefer
	9:00 – 12:00	Team Interviews, documents & records reviews, system walk-downs, work observations, discussions, breakout sessions	Team Members & Counterparts
LCR	1:00 – 4:00	IRR Team Meeting	C. Schaefer
LCR	4:00 – 5:00	C-AD Debrief	C. Schaefer

Lessard, Edward T

From: Bergh, Paul J
Sent: Monday, March 09, 2015 12:10 PM
To: Lessard, Edward T
Subject: RE: Survey of 912
Attachments: EEBA 1-2-15.docx; ERL 4th Qt.docx

Hi Ed,

The first attachment is a quarterly survey of B912 including the area where ERL is located . A review of past quarterly surveys shows that this survey of the ERL area is representative of the past few years. Based on this survey and an occupancy factor of 40 hours /week for a year a dose of 500 mrem per year is not possible.

The second attachment is map showing the locations of the Area TLDs deployed at ERL for 2014. Results are below. Based on these area TLD results and an occupancy factor of 40 hours /week for a year a dose of 500 mrem per year is not possible.

ERL TLD Area Monitoring for 2014

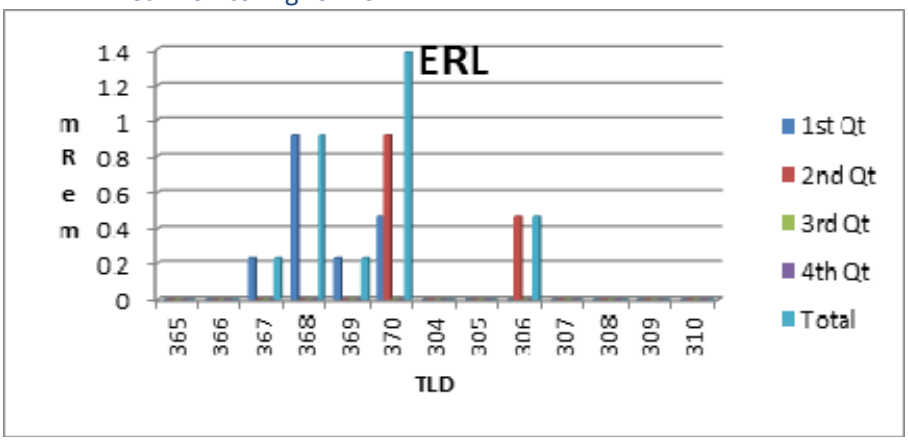

Thanks,

Paul

From: Lessard, Edward T
Sent: Monday, March 09, 2015 11:12 AM
To: Bergh, Paul J
Subject: RE: Survey of 912

Hi Paul:

Do you also have a general survey of the ERL areas? I need some numbers to see if we have a situation that is less than 500 mrem per year if a person stayed in the ERL area 40 hours per week with ERL not running. Thus, even dose rate from blocks stored nearby will count. Also, do we have any TLDs positioned out there, and some past data?

Thanks.

Regards.

Ed

From: Bergh, Paul J
Sent: Monday, March 09, 2015 10:43 AM
To: Lessard, Edward T
Subject: RE: Survey of 912

Hi Ed,

Attached are two surveys of the floor in B912:

The first attachment shows the contact dose rates(uR/h) on the floor.

The second attachment shows Contact/Knee/waist (uR/h) readings.

Thanks,

Paul

From: Lessard, Edward T
Sent: Friday, February 27, 2015 4:01 PM
To: Bergh, Paul J
Subject: Survey of 912

Hi Paul:

I recall you did a survey of 912 after we removed the old beamlines in ATF II area. Could you send me a copy?

Thanks.

Regards.

Ed

BNL RADIOLOGICAL SURVEY FORM

Bldg. #: 912 X **Routine** Quarterly
Location: EEBA □ **Special** N/A
Date/Time: 1-2-15 1330 □ **RWP#** N/A

Smear Survey Results (DPM/100cm^2)

	^{3}H	β – γ		α
1.			16.	
2.			17.	
3.			18.	
4.			19.	
5.			20.	
6.			21.	
7.			22.	
8.			23.	
9.			24.	
10.			25.	
11.			26.	
12.			27.	
13.			28.	
14.			29.	
15.			30.	

Masslin Survey Results (DPM/LAS)

1.		8.	
2.		9.	
3.		10.	
4.		11.	
5.		12.	
6.		13.	
7.		14.	

Legend: ○ **Smear Location** □ **Masslin Location**
Δ **Airborne**

xxx y
zzz

xxx=Contact Reading
zzz=Reading@ 30cm
y= Radiation Type

Dose Rates (Highest)		Airborne Contamination		
Contact	600	Time	µCi/cc	%DAC
General Area	250			

X All dose rates are in µRem/hr at 12 inches (30 cm) and taken at waist height unless otherwise noted.

Model	Bicron		
Serial #	CO87E		
Cal Due Date	5-12-15		
Source Checked (Yes or No)	Yes		

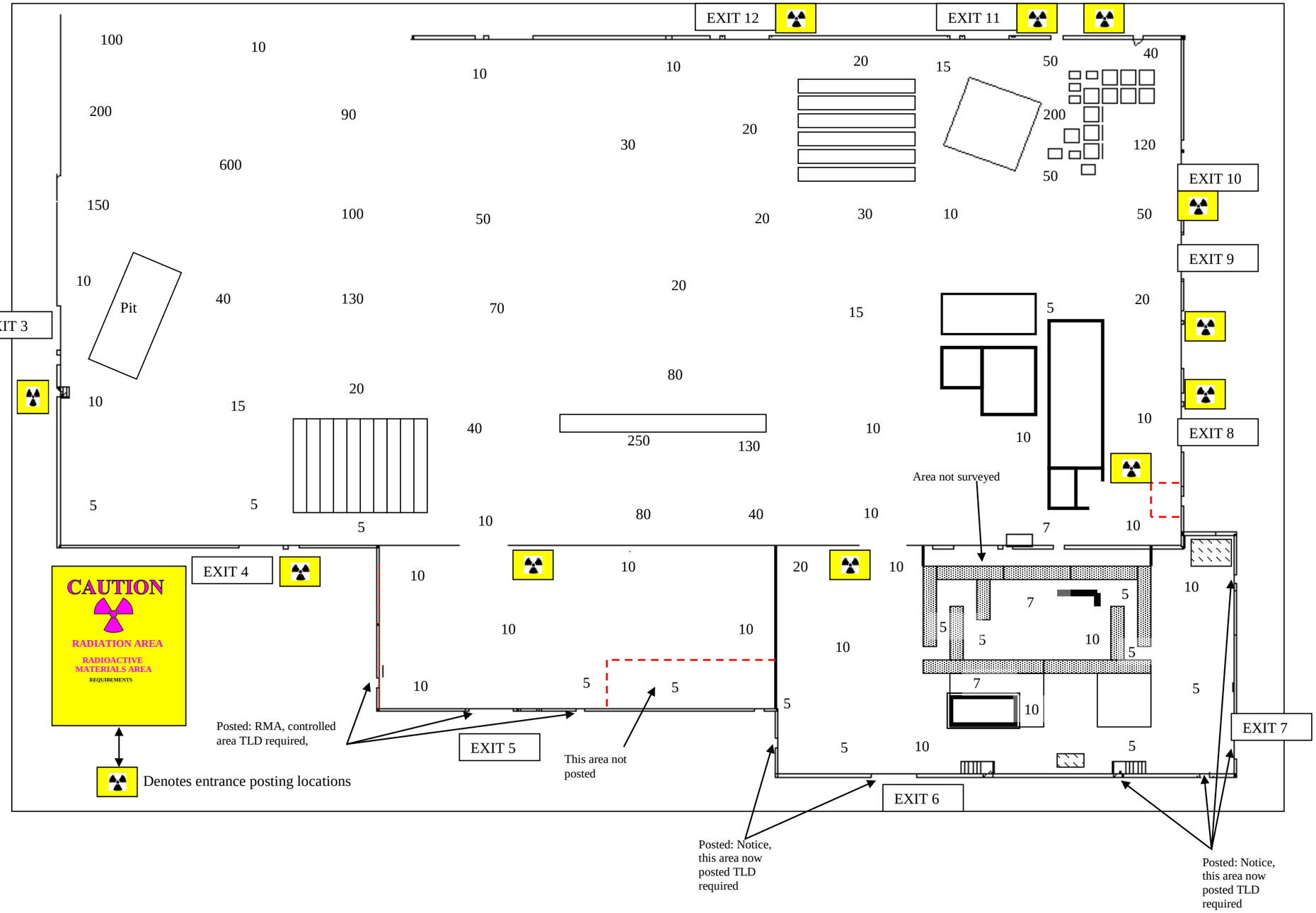

Surveyed By RWilkins 1-6-15
Signature/Date

Reviewed By:
Signature/Date

File Code: FS72SR.09

BNL RADIOLOGICAL SURVEY FORM

Bldg. #: 912 ☐ **Routine**_____
Location: ERL ☐ **Special**_____
Date/Time: 10-4-14 ☐ **RWP#**_____

Smear Survey Results (DPM/100cm^2)

	^{3}H	β – γ	α		^{3}H	β – γ	α
1.				16.			
2.				17.			
3.				18.			
4.				19.			
5.				20.			
6.				21.			
7.				22.			
8.				23.			
9.				24.			
10.				25.			
11.				26.			
12.				27.			
13.				28.			
14.				29.			
15.				30.			

Masslinn Survey Results (DPM/LAS)

1.			8.		
2.			9.		
3.			10.		
4.			11.		
5.			12.		
6.			13.		
7.			14.		

Legend: ○ **Smear Location** ☐ **Masslinn Location**
Δ **Airborne**

xxx **y**
zzz

xxx=Contact Reading
zzz=Reading@ 30cm
y= Radiation Type

Exposure Rates (Highest)		Airborne Contamination		
Contact		Time	µCi/cc	%DAC
General Area				

☐ All Exposure Rates are in mR/hr and taken at 12 inches (30 cm) unless otherwise noted.

Model			
Serial #			
Cal Due Date			
Source Checked (Yes or No)			

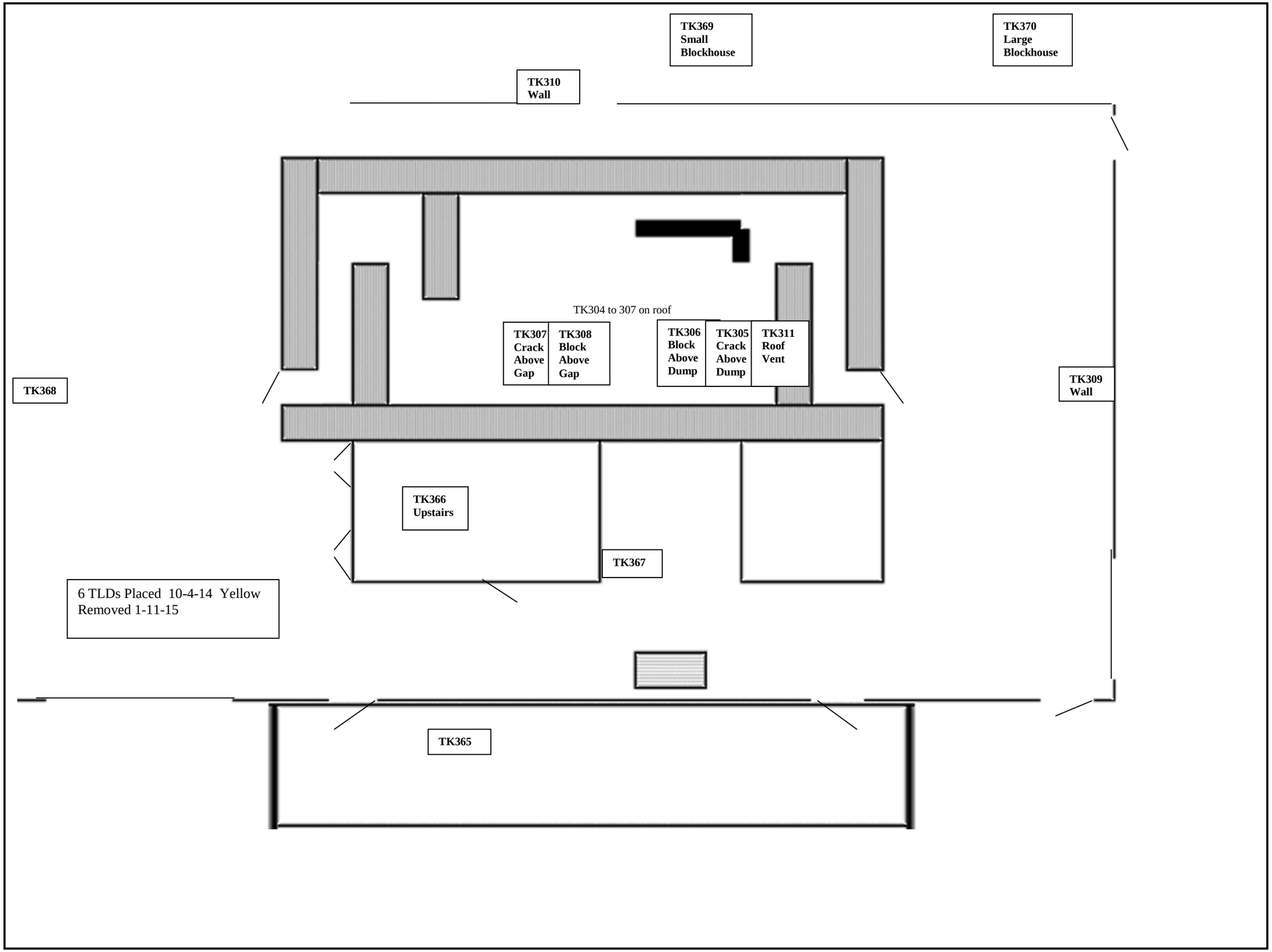

Form FS-1000.1

Surveyed By:_____
Signature/Date

Reviewed By:_____
Signature/Date