C-AD

Radiation

Safety Minutes of Radiation Safety Committee of August 10, 2006

Committee

Issued: August 21, 2006

Subject: ERL Critical Devices, Klystron Room, and Fault Protection

Present: D. Beavis, A. Etkin, P. Bergh, I. Ben-Zvi, K. Yip, I.-H. Chiang, R. Karol, L. Ahrens, N. Kling, D. Phillips, B. Oerter, P. Cameron, B. van Kuik, A. Zaltsman, and V.Litvinenko

Klystron Room Access Protection and Shielding

The Klystron room shielding was based on the operation of a similar Klystron at Los Alamos, which had a 1/8 inch lead "garage" over it. For the energy range of the x-rays the 1/8 inch of lead is equivalent to 2 inches of steel or less. The Klystron room is a steel box with a wall thickness of 2 inches of steel. There are penetrations in the back wall for utilities and the wave guide. These penetrations will be shadowed by steel of lead to prevent x-rays from directly shining out of the penetrations.

(CK-ERL-2006-485) Before operation of the Klystron the shielding prints need to be reviewed and signed. The review should examine the actual design for cracks and penetrations along with the any shadowing plates.

TLDs were attached to the Klystron during testing at the vendor (see attachment 1). Based on these results the committee recommends that the room does not require interlocks, but should have no access with the Klystron operating.

(CK-ERL-fy2006-486) A Kirk-key system will be used to control access to the room. The power to the klystron will be required to be off via the Kirk key for personnel to enter. The Kirk-key system is also an electrical safety requirement.

(CK-ERL-FY2006-487) The room will be posted as a high radiation area with beam on.

(CK-ERL-FY2006-488) Surveys will be conducted around the Klystron room before personnel are allowed near the steel enclosure. Attention should be given to any penetrations and cracks.

It is recommended that measurements inside and around the steel room be conducted to gain operational history on the radiation doses (probably will TLDs).

Critical Devices

The committee discussed the critical devices for ERL. A proposed list provided by J. Reich was considered (see attachment 2).

The potential radiation sources are the electron gun, the five-cell cavity, beam losses from the 3.5 MeV beam, and beam losses from the 25 MeV beam. The x-rays from the gun and five-cell cavity are expected to be more that 50 rads/hr at a meter. Therefore, dual interlocks and shutoff devices are required for all radiation sources.

(CK-ERL-FY2006-489) The Klystron will be turned off with two 4160V contactors. The internal contactor can be used as one of the critical devices provided that it is reviewed as suitable and the soft start does not defeat the protection provided by it. The low level RF (LLRF) was not considered as an option as a shutoff device due to the potential for oscillation in the system. The LLRF is will be used to shut the Klystron down quickly. The x-rays from the electron gun and the 3.5 MeV beam (and the 25 MeV beam) will be stopped by these critical devices.

(CK-ERL-FY2006-490) The existing 13.8 kV contactor will be used as a reachback for the 4160V contactors. The committee will reconsider this device as a reachback if an engineering review determines it is not suitable. Normally we do not reachback to 13.8 kV, but since this contactor was available from MPS operations in the past it was decided to utilize it.

(CK-ERL-FY2006-491) The critical devices for the five-cell cavity will be two 480V contactors. This will terminate the x-rays from the five-cell cavity (it will also prevent acceleration of the 3.5 MeV beam).

(CK-ERL-FY2006-492) The will be no reachback device for the two 480V contactors. The access control system will generate the local radiation emanate alarms if it detects a reachback condition and send alarms to the CAS and MCR.

The present approved scheme does not require the laser in the interlock system for radiation protection. It is not clear if the laser will have interlocks for access into the ERL area. The configuration has not been determined.

Interlock Testing

(CK-ERL-FY2006-493) It needs to be determined if the interlocks for ERL will require semi-annual or annual testing.

Beam Fault Protection

The committee was asked to provide guidelines on the acceptable fault levels that chipmunks could provide protection. The committee would like the design to have one

chipmunk detect faults up to 1 rem/hr. Two chipmunks must interlock for faults between 1 to 10 rem/hr.

The committee was asked to consider if other devices could be used to supplement the chipmunks for high fault levels. Attachment 3 provides a brief discussion of several schemes under consideration. Attachments 4 and 5 discuss the potential fault levels outside the shielding under various conditions. Shielding changes and shielding near the beam pipe are under consideration. If additional devices can be used to supplement the chipmunks the shielding design will be impacted.

P. Cameron made a presentation (see attachment 6) on detecting losses using beam current transformers in differential mode. The beam current transformers would have a null circuit and keep alive circuits. To compensate for thermal drifts, spurious magnetic fields, and gain/linearity the beam may need to be turned off every 1-5 minutes to renull. With this scheme beam losses approaching 0.1 microAmp could be detected. For a 50 mA 25 MeV beam a loss of 50 microAmps represents a factor of 50 below the 50 kW maximum beam loss limit. It was considered quite easy to detect this level of loss with the current transformers. Several members were uneasy with the idea of using the current transformers. Since time was up the meeting was adjourned. Discussion will continue in a meeting in 1-2 weeks on the current transformers and other options to limit beam losses.

Attachments (File copy Only):

1. E-mail, D. Beavis to RSC and attachments, August 8, 2006
2. E-mail, D. Beavis to RSC, August 8, 2006.
3. D. Beavis, “Comments for the RSC Meeting of August 10, 2006 on ERL”, August 8,2006
4. K. Yip, “ Radiation Estimates Related to the Energy Recovery Linac Facility (ERL)”, March 22, 2006
5. D. Beavis, “Simple Estimates for ERL Radiation”, August 1, 2006 and updated August 9, 2006.
6. P. Cameron, “Differential Current Measurement for Personnel Protection”, PowerPoint presentation, August 10, 2006.

CC:

RSC minutes file
RSC ERL file
RSC
Attendees

C-AD

Issued: January 23, 2007

Radiation

Safety Minutes of Radiation Safety Committee of January 18, 2007

Committee

Subject: Water Pipe over TtB and ERL Items

Present: D. Beavis, E.T. Lessard, C. Carlson, J. Mills, S. Guthrie, A. Raphael, R. Karol, A. Etkin, I.-H. Chiang, W. MacKay, P. Bergh, N. Kling, B. Van Kuik, J.W. Glenn, V. Litvinenko , and L. Ahrens

The committee reviewed two separate issues. The plan to install a domestic water pipe over the top of the TtB tunnel was reviewed. Two issues related to the ERL area design were discussed.

Water Pipe Over TtB

A domestic water pipe is planned to be routed over the top of the TtB tunnel. There is concern for the potential to activate the water in the pipe. Calculations on the expected activity concentrations were provided in two notes (see attachments 1 and 2).

The committee recommended that the pipe be allowed to go over the top of the TtB tunnel. It was recommended, based on ALARA principles, that a minimum of 3 feet of soil remain between the pipe and the tunnel instead of the initially planned 1-foot.

The committee reviewed the methods used to calculate the expected activity concentrations that could be expected in the water pipe for deuteron running. Deuterons beams produce the highest radiation levels of any of the beams that are transported in the Tandem to Booster (TtB) tunnel and therefore represent a worst case. The calculations appear to be conservative. With unrealistic water flow conditions the activity levels are typically 10^{-4} that of the drinking water standard (DWS). With realistic flow conditions most of the activity concentrations are 10^{-5} or lower relative to the DWS.

There was concern expressed about the possible perception of allowing any activity to be created in the water pipe no mater how small. It was noted that the addition of more soil between the pipe and the tunnel would not have a large impact of the cost of the project. Based on this the committee recommended that the design have 3 feet of dirt between the tunnel and the water pipe. Three feet of soil is the required minimum shielding thickness

of the TtB berm for deuterons. This would reduce the activity concentrations by a factor of 25 based on Figure 1. of attachment 1.

These numbers can be placed in perspective to other radiation doses. The average dose on Long Island due to cosmic rays is 24 mrem/yr (Radiological Worker 1 Training Study guide). The drinking water standard is based on 4 mrem/yr if all the water a person consumes comes from the activated water supply. Based on the activity concentrations it would be expected that a person drinking the water could receive 700,000,000 times smaller yearly dose than that from cosmic rays. Put another way, the dose from drinking the water for an entire year would be equivalent to the dose from cosmic rays for $1/10^{th}$ of a second. The committee decided that the potential activity was sufficiently small.

The pipe is a ductile iron pipe with a concrete liner. The question was raised if there was any issue about activity from the water pipe. The concentration of elements in the water includes any elements that were leached from the walls of the water pipe. The concrete has about a 10% fraction of Si. A 10^{-4} concentration of Si in the water could introduce about 10^{-3} pCi of Al-27 into the water with a 2 ft/s flow rate. Any leaching from the wall of the pipe is not expected to be an issue.

The nearest building where water could be extracted from the pipe is about 400 feet away. At a flow rate of 2 ft/s this requires 200 seconds for the water to travel to the nearest extraction point. Short-lived isotopes would have a large reduction in the concentration due to this transit time. The isotope with the highest concentration, N-16, has a half-life of 7.13 seconds. The concentration would be reduced by $4*10^{-9}$ for the transit time.

DOE does not list a drinking water limit for N-16. N-16 does have an air immersion limit of 3.*10**-9 micro-Ci/ml . A crude estimate of the a drinking water limit can be obtained by comparing the air immersion limit of N-16 to an element which has both an air immersion limit and drinking water limit. The air immersion limit for C-11 is 2.*10**-8 micro-Ci/ml and the DWS for C-11 is 400,000 pCi/L. Scaling by the air immersion limit a crude estimate of the drinking water limit for N-16 would be 60,000 pCi/L. The activity concentration was estimated to be 36 pCi/L of more than 1000 times lower. If the decay of the N-16 is taken into account due to the transit time to the nearest extraction point than the activity concentration of N-16 would be 10**-7 pCi/L. The committee did not consider the N-16 to be a concern.

The committee did not see a need to use configuration control on the potential locations of the loss points. It is noted that the calculations were conducted assuming the water pipe is at the peak of the neutron flux distribution relative to a local loss point. In reality the closest point is presently 12 meters away and a reduction of 100 is expected.

ERL Inner Shield Wall

The ERL facility has a four-foot thick light concrete wall. This wall does not provide sufficient shielding for the forward radiation from 25 MeV electron beam losses. Various

schemes have been tried in the past to supplement the outer wall. Attachment 3 discusses a scheme to shadow most of the outer wall by an inner wall of 2 feet of heavy concrete or steel. For a 50 kW beam loss the maximum dose rate outside the shielding is expected to be 15 rem/hr. Normal operations are expected to have values 1000 to 100,000 times lower.

The committee was asked to approve the general approach and not the specific details, which will be reviewed at a later meeting. The committee found the approach was reasonable and although the worst-case levels are higher than desired, the committee expects they are conservative and in reality will be lower. The area will have multiple chipmunks distributed around the facility, which should be able to detect beam faults and prevent exposure above the committee's or BNL's limits.

The machine protection devices are expected to typically turn off the beam when the beam losses are above 5-10 W. It is expected that losses of the scale 50 kW are not practical and the machine would be damaged at much smaller loss rates. The project is encouraged to provide a method and calculations that would support a smaller maximum sustainable beam loss rate.

The shield blocks are planned to be large blocks that require a crane to move. There is one location where space limitations may require lead to be used. It is requested that the inner shadow wall be constructed such that all components are captured in the present shielding removal procedure. Small shielding blocks such as pack blocks should be avoided so that configuration control is not an issue. **(Ck-ERL-FY2007-500).**

ERL 50 kW Wave Guide and Nearby Penetrations

The committee also discussed the penetrations planned for the 50 kW wave-guide, water pipes and cables that are adjacent to the support building. Attachment 4 discusses that assumptions and calculations that were done for these penetrations. The committee found the methods acceptable. A 50 kW beam loss is again assumed and the committee encourages the project to spend the effort to justify a smaller more realistic number.

The support building has predicted maximum levels of 500 mrem/hr from the penetrations. A chipmunk should be sufficient to prevent such faults. The highest estimate dose rate is 28 rem/hr outside the shielding directly outside of the wave-guide penetration. This location is 12 feet above the floor level and is in area that can be fenced off if needed. The 50 kW beam loss is very conservative. Fault studies will need to be conducted to determine the final configuration of this area outside of the penetrations. **(CK-ERL-Fy2007-501)**

The committee requests that the project provides an updated scenario for operations and personnel occupancies by area so that integrated exposure to personnel can be estimated. **(CK-erl-Fy2007-502)**

Attachments (file copy only)

1) D. Beavis, " Estimate of Radioactive Concentrations in a Water Pipe over TtB", Jan. 9, 2007.
2) D. Beavis, " Water Flow and Activity Concentrations in the Water Pipe Over TtB", Jan. 17, 2007.
3) D. Beavis, " The Effectiveness of a Two-Foot Thick Inner Concrete Wall", Dec. 11, 2007.
4) D. Beavis," Estimate of the Radiation Exiting Penetrations for the ERL 50 kW Wave Guide, Cable Buss Block, and Water Pipes", Dec. 6, 2007.

CC:

Present
RSC
RSC Minutes file
RSC tandem file
RSC ERL file

Collider-Accelerator Department

BROOKHAVEN NATIONAL LABORATORY

Building 911B – P.O. Box 5000
Upton, NY 11973-5000
Phone 631 344 7124
Fax 631 344 5568
beavis@bnl.gov
www.bnl.gov

managed by Brookhaven Science Associates
for the U.S. Department of Energy

Memo

date: *April 11, 2012*

to: *RSC*

from: *D. Beavis*

subject: *ERL Beam Dump Review*

The review of the design of the ERL beam dump and shield has been an open RSC checklist item[1] for ERL. The shield has been submitted for review. Several people have examined aspects of the electron beam dump. The beam dump is designed for 1MW of electrons at 3.5 MeV. This is the maximum beam energy for the electron gun. The ASE for ERL is written for 3.5 MeV and 1.5 MW although the beam dump is not expected to have more than 1 MW of beam.

External Dose Rates from the Beam Dump

The dose rates in areas adjacent to the ERL shielding have been estimated. Kin Yip[2] used MCNPX to estimate the dose rate at the east entrance gate and near 90 degrees at the closest location a person can stand. The dose rate near the power supply house was estimated to be $7.5*10^{-2}$ mrem/hr for 1 MW. The dose rate at the gate is 100 times lower. Analytic approximations were used[3] to estimate the dose rate near the concrete wall inside the power supply room at 1 mrem/hr. The dose rates in the isle way near the power supply building were estimated[4] to be 0.7 mrem/hr for 1MW.

The steel shield on the side of the beam dump is 6.1 inches thick, 3 inches on top, 4 inches at the back, and 6.1 inches on the bottom. In the forward direction a two-foot free standing block of steel is used to shadow the entrance door from the beam line and the beam dump. The beam dump in the ERL layout is shown below. In addition, various views of the beam dump and the removable shield are shown in a series of views.

The four-foot thick concrete roof is an area that is not allowed to be occupied during ERL operations. The dose rates on the roof over the beam dump will be about a factor of 20 higher than out the side wall due to the thinner steel shield and the smaller distance. This should not create any issues. The beam dump is downstream of the ODH vent, which is a weak portion of the roof shielding[5]. The photons must penetrate two feet of concrete to enter the port and require at least two scatters to exit the port. Scaling the G5 beam dump results, using the TVL for light concrete, and two scatters for the photons an estimate of less than 1 mrem/hr is expected out the ODH port.

The 50 kW waveguide is another close large penetration in the shielding. The expected dose exiting the port is estimated to be 6mrem/hr. There is a shadow block after the port[6] to further reduce the radiation exiting the port. The dose to occupied areas is expected to be satisfactory.

Most other penetrations are smaller and farther away and not expected to be an issue to the beam dump shield design. The beam dump will be a substantial source of x-rays inside the shielding for routine operations. This is a departure from the initial design philosophy[5] to make the dump no larger than expected routine losses. However, this design change does not create a dose issue for personnel outside the shielding and makes the dump shield design more economical. Initial surveys of the ERL facility will verify the design of the shielding and the penetrations.

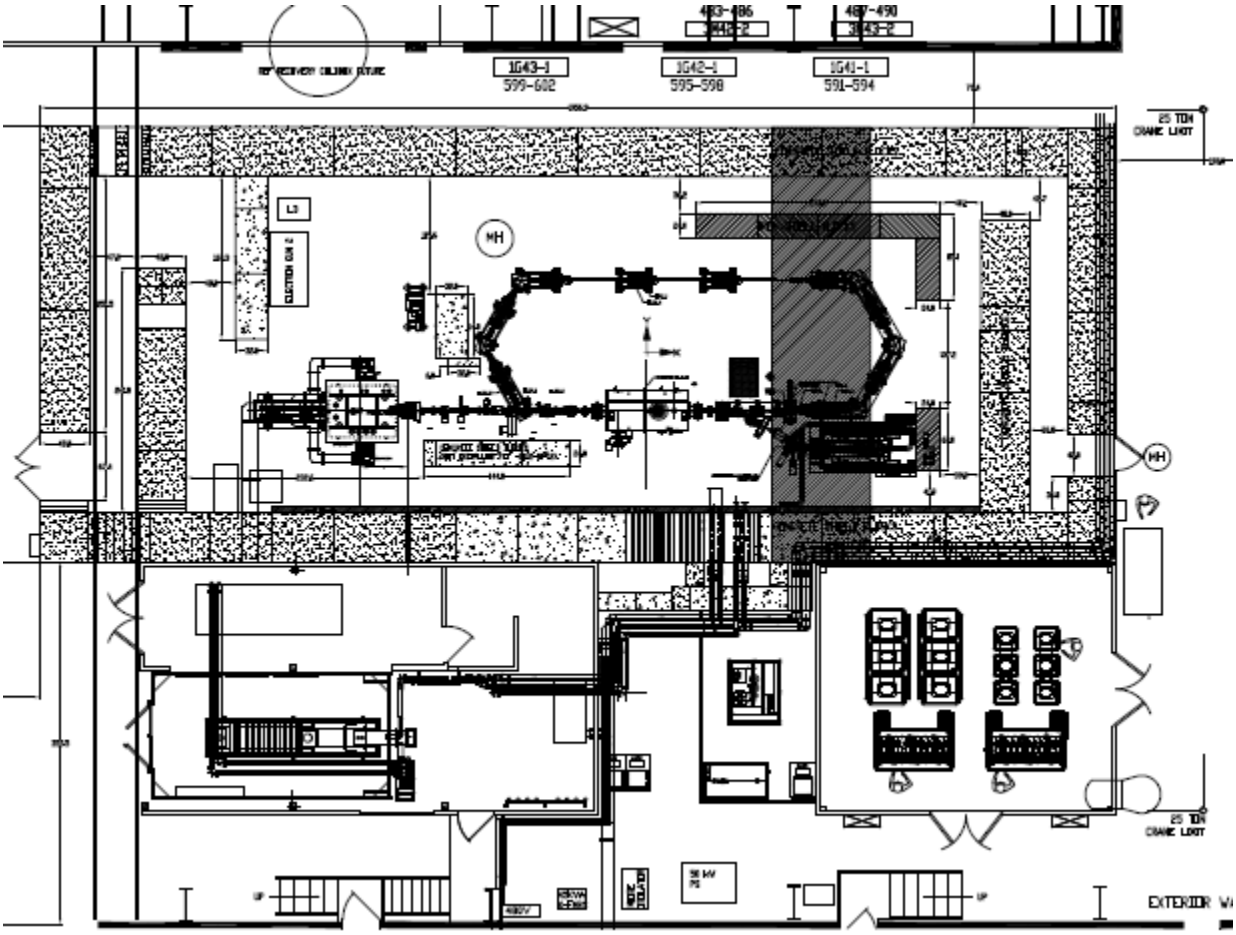

Layout showing the beam dump and surrounding facilities.

Ozone Production in Air near the Beam Dump

The production of ozone in the air surrounding the beam dump was estimated[2] to be 1.6 PPM per hour with no shielding. At that time the beam dump shield was estimated to be 0.25 meter thick and the ozone production would have been reduced by about 10^{-4}. The shield has been designed

to be about 6 inches thick on the sides and 3 inches on top. A distance of 10 meters was used for the estimation of the concentration, which may be too large a value. The concentration will depend of air circulation, incidental venting, etc. The air quality will be sampled for the first few operations to provide an empirical measure of the ozone production and concentration. **(Ck-FY2012-ERL-804)**

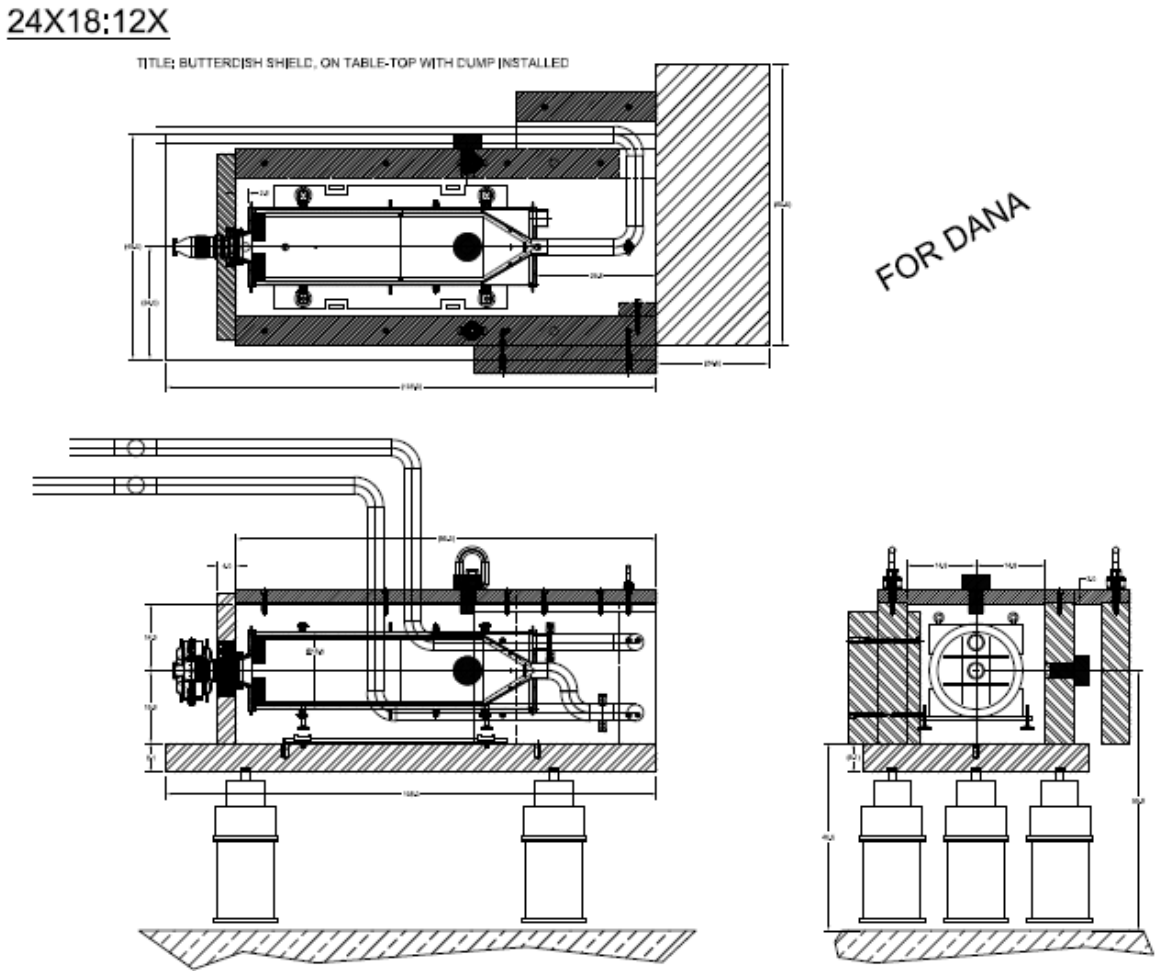

Various views of the beam dump and shield. The shield has counter weights for rigging.

Hydrogen Generation in the Cooling Water

The electron beam will deposit energy in the cooling water. Hydrogen can be generated in the water and has been examined by K. Yip[7] using MCNPX and I. Ben-Zvi[2] using analytic techniques. Their results were 4.8 liters/hr (K. Yip) and 5.6 liters/hr (I. Ben-Zvi). There are no expected radioactive products in the cooling water since the beam energy is below most thresholds. Therefore, the plan is to vent the gases from the cooling water to a safe location outside. At higher beam energies the radioactive products can make venting the gases an issue. The venting method and area must be reviewed by the safety section before beam is put into the dump. **(Ck-FY2012-ERL-805)**

References

1. RSC Minutes of May 27, 2004; http://www.c-ad.bnl.gov/esfd/RSC/Minutes/05-27-04%20minutes.pdf
2. Kin Yip memorandum of Feb. 27, 2012; http://www.c-ad.bnl.gov/esfd/RSC/Memos/kin_dump.pdf
3. I. Ben-Zvi, C-AD AP note, March 2012.
4. D. Beavis memorandum of Jan. 12, 2012; http://www.c-ad.bnl.gov/esfd/RSC/Memos/rsc%20memos/main%20pages/rsc_memos.htm
5. D. Beavis Memorandum of March 28, 2008; http://www.c-ad.bnl.gov/esfd/RSC/Memos/ERL-Penetrations3.pdf
6. D. Beavis Memorandum of Dec. 6, 2006; http://www.c-ad.bnl.gov/esfd/RSC/Memos/holes_1_040912.pdf
7. Kin Yip memorandum of Feb. 15, 2012; http://www.c-ad.bnl.gov/esfd/RSC/Memos/kin_dump_water.pdf

CC

D. Phillips
S. Belomestnykh
J. Tuozzolo
I. Ben-Zvi

Collider-Accelerator Department

BROOKHAVEN NATIONAL LABORATORY

Building 911B – P.O. Box 5000
Upton, NY 11973-5000
Phone 631 344 7124
Fax 631 344 5568
beavis@bnl.gov
www.bnl.gov

managed by Brookhaven Science Associates
for the U.S. Department of Energy

Memo

date: *April 11, 2012, (UPDATED-April 25, 2012)*

to: *RSC*

from: *D. Beavis*

subject: *ERL Beam Dump Review*

The review of the design of the ERL beam dump and shield has been an open RSC checklist item[1] for ERL. The shield has been submitted for review. Several people have examined aspects of the electron beam dump. The beam dump is designed for 1MW of electrons at 3.5 MeV. This is the maximum beam energy for the electron gun. The ASE for ERL is written for 3.5 MeV and 1.5 MW although the beam dump is not expected to have more than 1 MW of beam.

Although the text of this review is written for 1 MW the results can be scaled to 1.5 MW, which is the ASE limit. The conclusions are that there will be no radiological issues related to the beam dump at the ASE limit. This conclusion will be confirmed by radiological surveys and air sampling.

External Dose Rates from the Beam Dump

The dose rates in areas adjacent to the ERL shielding have been estimated. Kin Yip[2] used MCNPX to estimate the dose rate at the east entrance gate and near 90 degrees at the closest location a person can stand. The dose rate near the power supply house was estimated to be $7.5*10^{-2}$ mrem/hr for 1 MW. The dose rate at the gate is 100 times lower. Analytic approximations were used[3] to estimate the dose rate near the concrete wall inside the power supply room at 1 mrem/hr. The dose rates in the isle way near the power supply building were estimated[4] to be 0.7 mrem/hr for 1MW.

The steel shield on the side of the beam dump is 6.1 inches thick, 3 inches on top, 4 inches at the back, and 6.1 inches on the bottom. In the forward direction a two-foot free standing block of steel is used to shadow the entrance door from the beam line and the beam dump. The beam dump in the ERL layout is shown below. In addition, various views of the beam dump and the removable shield are shown in a series of views.

The four-foot thick concrete roof is an area that is not allowed to be occupied during ERL operations. The dose rates on the roof over the beam dump will be about a factor of 20 higher than out the side wall due to the thinner steel shield and the smaller distance. This should not create any issues. The beam dump is downstream of the ODH vent, which is a weak portion of the roof shielding[5]. The photons must penetrate two feet of concrete to enter the port and require at least two scatters to exit the port. Scaling the G5 beam dump results, using the TVL for light

concrete, and two scatters for the photons an estimate of less than 1 mrem/hr is expected out the ODH port.

The 50 kW waveguide is another close large penetration in the shielding. The expected dose exiting the port is estimated to be 6mrem/hr. There is a shadow block after the port[6] to further reduce the radiation exiting the port. The dose to occupied areas is expected to be satisfactory.

Most other penetrations are smaller and farther away and not expected to be an issue to the beam dump shield design. The beam dump will be a substantial source of x-rays inside the shielding for routine operations. This is a departure from the initial design philosophy[5] to make the dump no larger than expected routine losses. However, this design change does not create a dose issue for personnel outside the shielding and makes the dump shield design more economical. Initial surveys of the ERL facility will verify the design of the shielding and the penetrations.

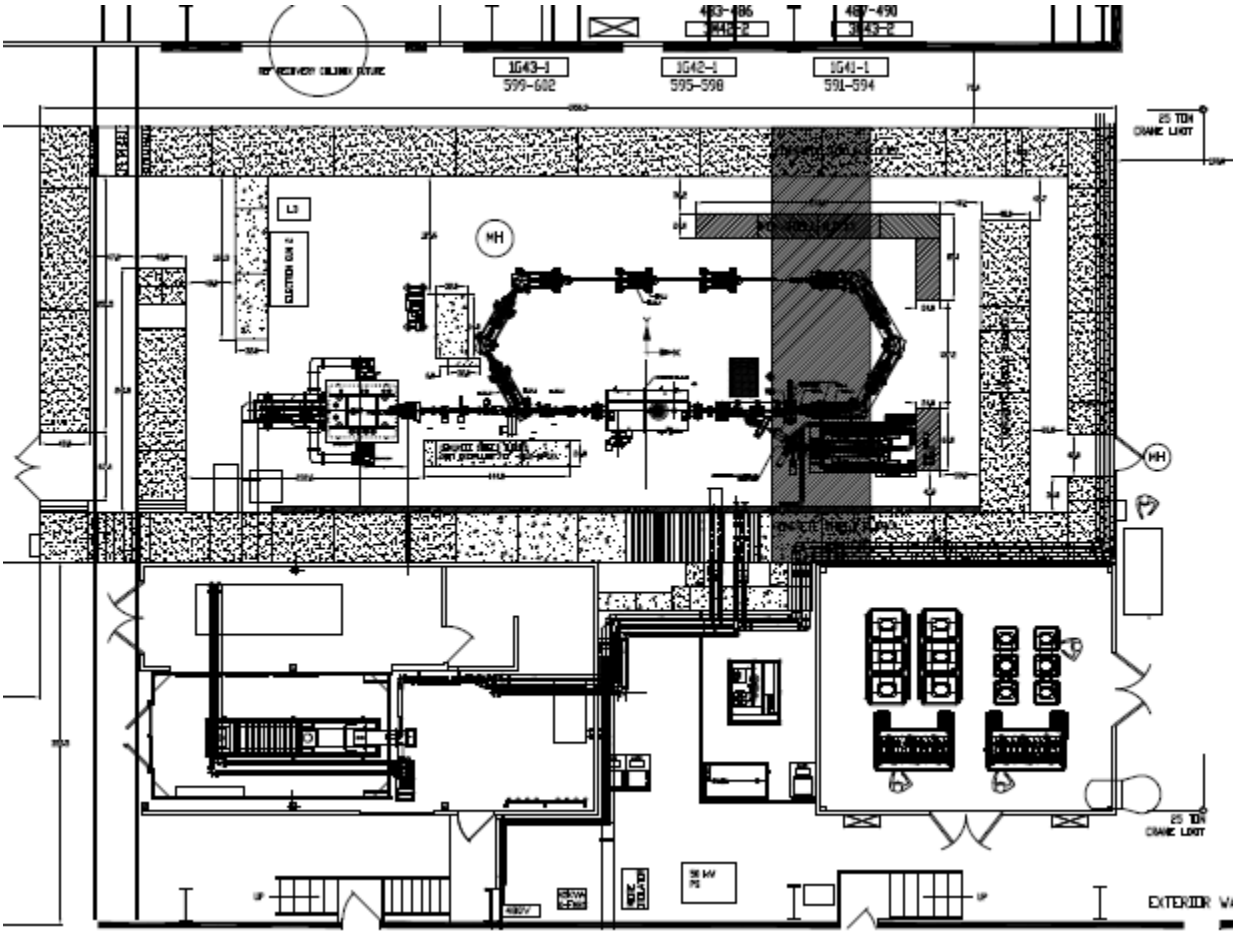

Layout showing the beam dump and surrounding facilities.

Ozone Production in Air near the Beam Dump

The production of ozone in the air surrounding the beam dump was estimated[2] to be 1.6 PPM per hour with no shielding. At that time the beam dump shield was estimated to be 0.25 meter thick and the ozone production would have been reduced by about 10^{-4}. The shield has been designed to be about 6 inches thick on the sides and 3 inches on top. A distance of 10 meters was used for the estimation of the concentration, which may be too large a value. The concentration will depend of air circulation, incidental venting, etc. The air quality will be sampled for the first few operations to provide an empirical measure of the ozone production and concentration. **(Ck-FY2012-ERL-804)**

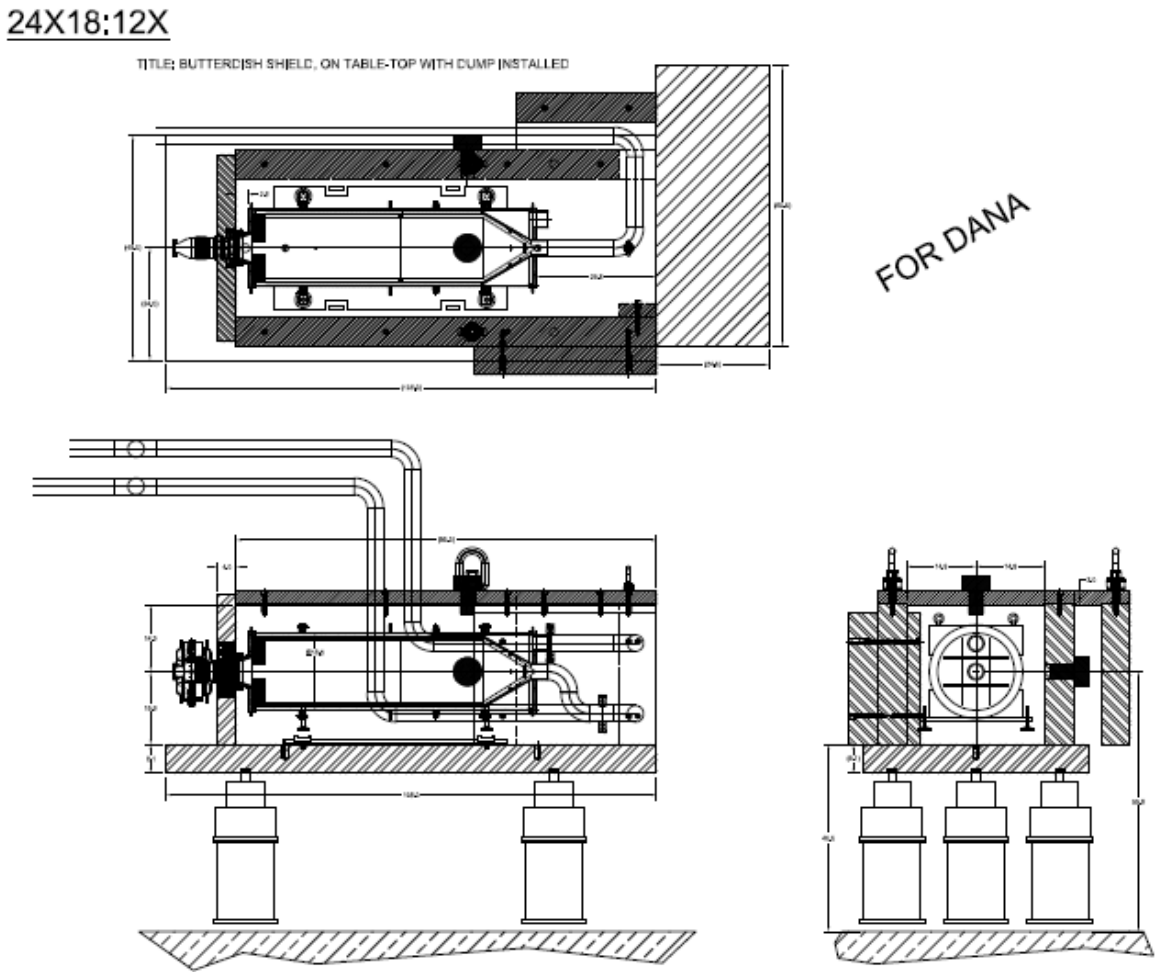

Various views of the beam dump and shield. The shield has counter weights for rigging.

Hydrogen Generation in the Cooling Water

The electron beam will deposit energy in the cooling water. Hydrogen can be generated in the water and has been examined by K. Yip[7] using MCNPX and I. Ben-Zvi[2] using analytic techniques. Their results were 4.8 liters/hr (K. Yip) and 5.6 liters/hr (I. Ben-Zvi). There are no expected radioactive products in the cooling water since the beam energy is below most thresholds. Therefore, the plan is to vent the gases from the cooling water to a safe location outside. At higher beam energies the radioactive products can make venting the gases an issue.

The venting method and area must be reviewed by the safety section before beam is put into the dump. **(Ck-FY2012-ERL-805)**

References

1. RSC Minutes of May 27, 2004; http://www.c-ad.bnl.gov/esfd/RSC/Minutes/05-27-04%20minutes.pdf
2. Kin Yip memorandum of Feb. 27, 2012; http://www.c-ad.bnl.gov/esfd/RSC/Memos/kin_dump.pdf
3. I. Ben-Zvi, C-AD AP note, March 2012.
4. D. Beavis memorandum of Jan. 12, 2012; http://www.c-ad.bnl.gov/esfd/RSC/Memos/rsc%20memos/main%20pages/rsc_memos.htm
5. D. Beavis Memorandum of March 28, 2008; http://www.c-ad.bnl.gov/esfd/RSC/Memos/ERL-Penetrations3.pdf
6. D. Beavis Memorandum of Dec. 6, 2006; http://www.c-ad.bnl.gov/esfd/RSC/Memos/holes_1_040912.pdf
7. Kin Yip memorandum of Feb. 15, 2012; http://www.c-ad.bnl.gov/esfd/RSC/Memos/kin_dump_water.pdf

CC

D. Phillips
S. Belomestnykh
J. Tuozzolo
I. Ben-Zvi

TITLE: BUTTERDISH SHIELD, BOLTED ASSEMBLY, W/ LIFTING RINGS

24X18: 8X

FOR DANA

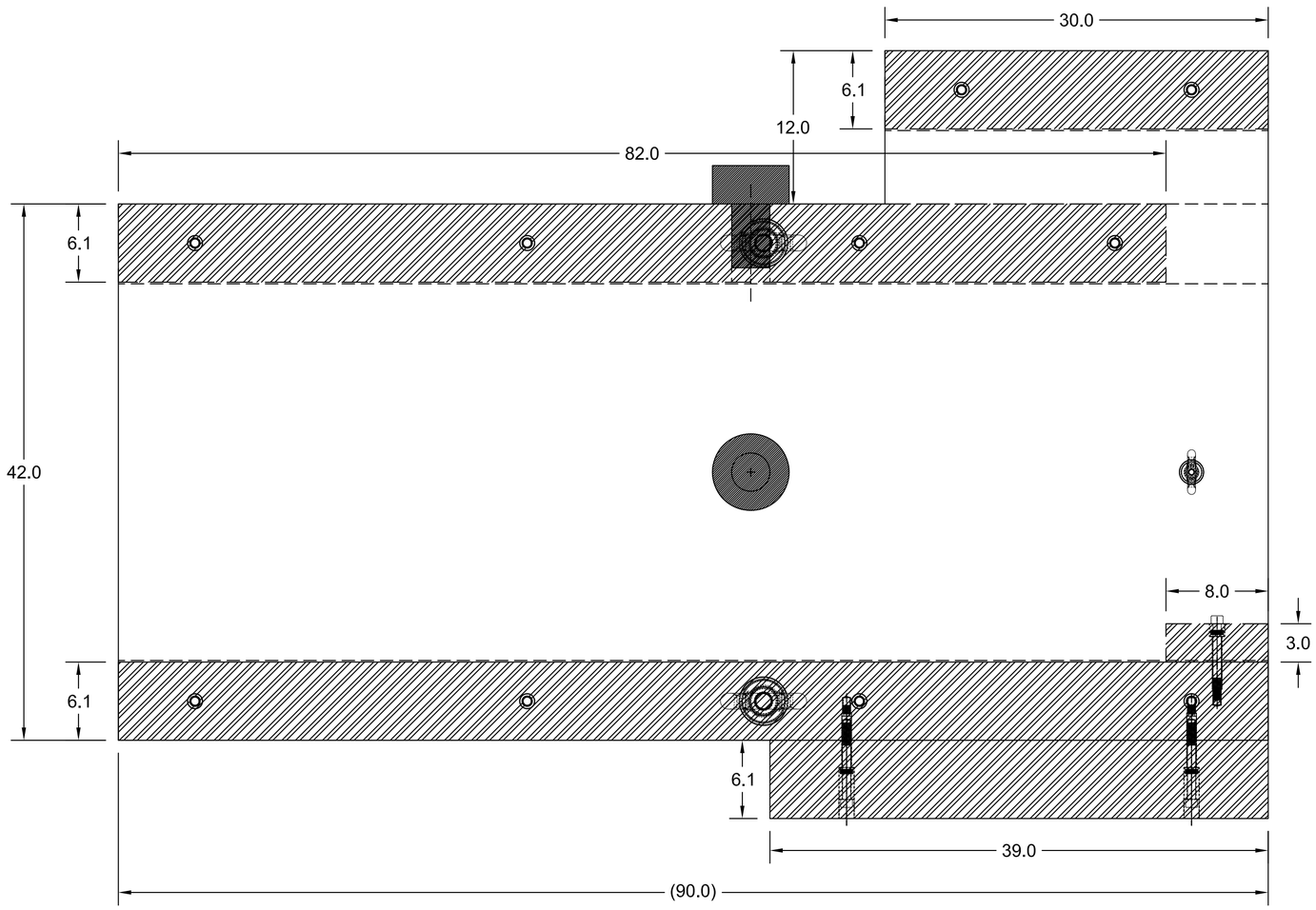

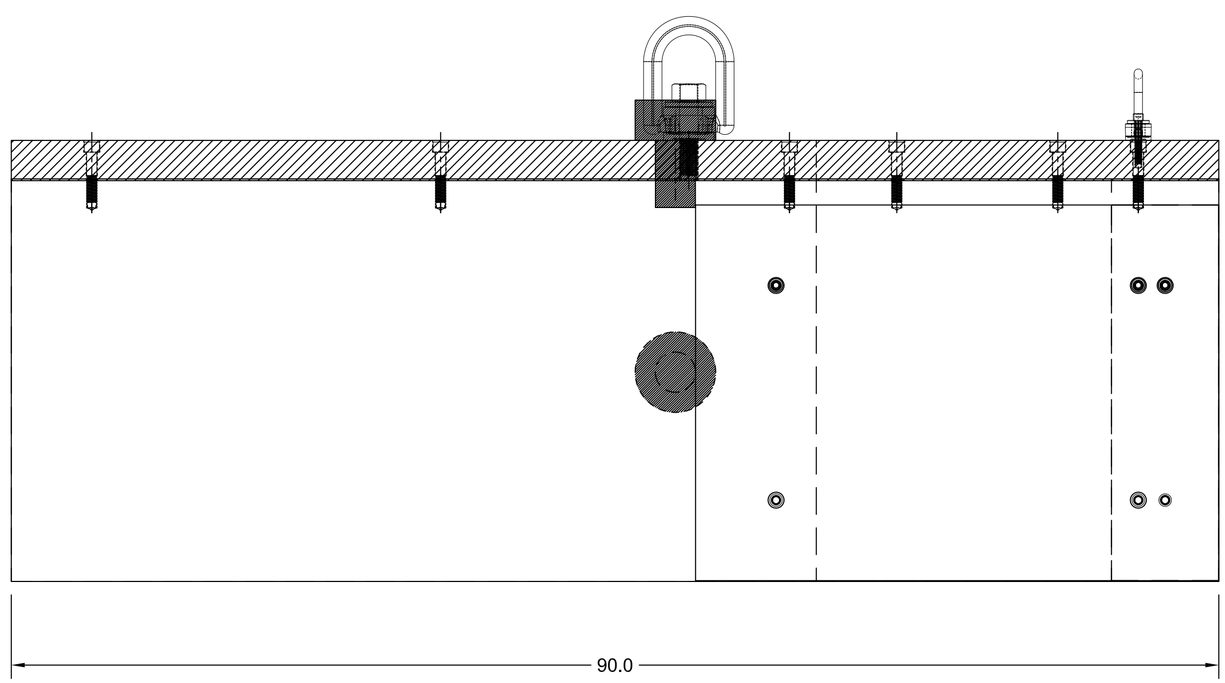

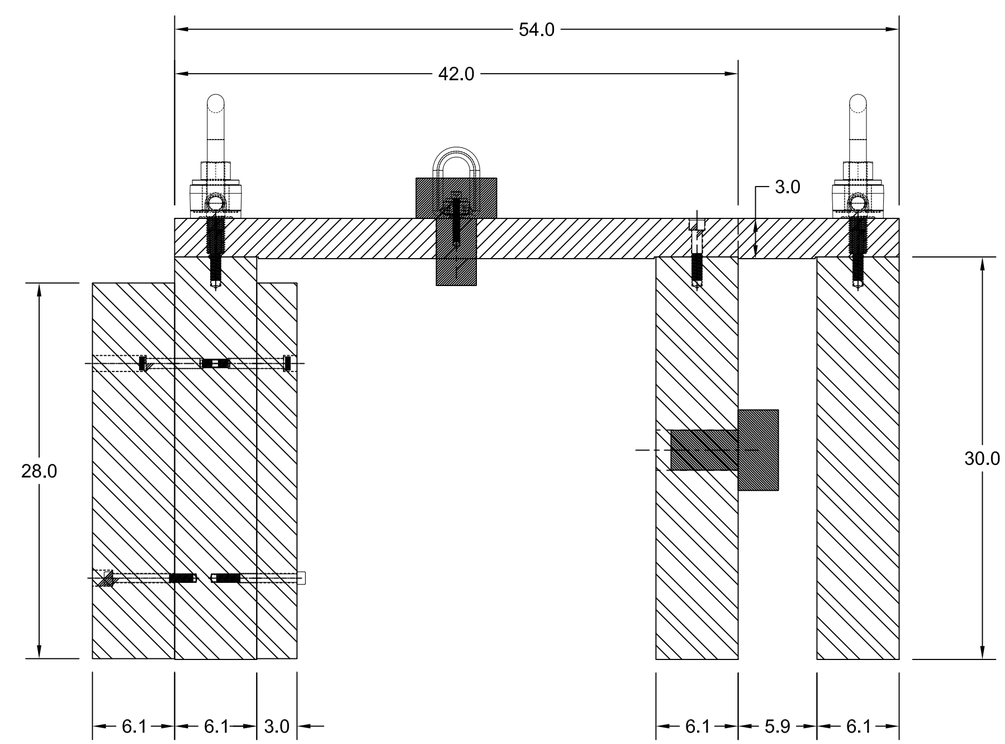

TITLE: BUTTERDISH SHIELD, ON TABLE-TOP

24X18: 8X

FOR DANA

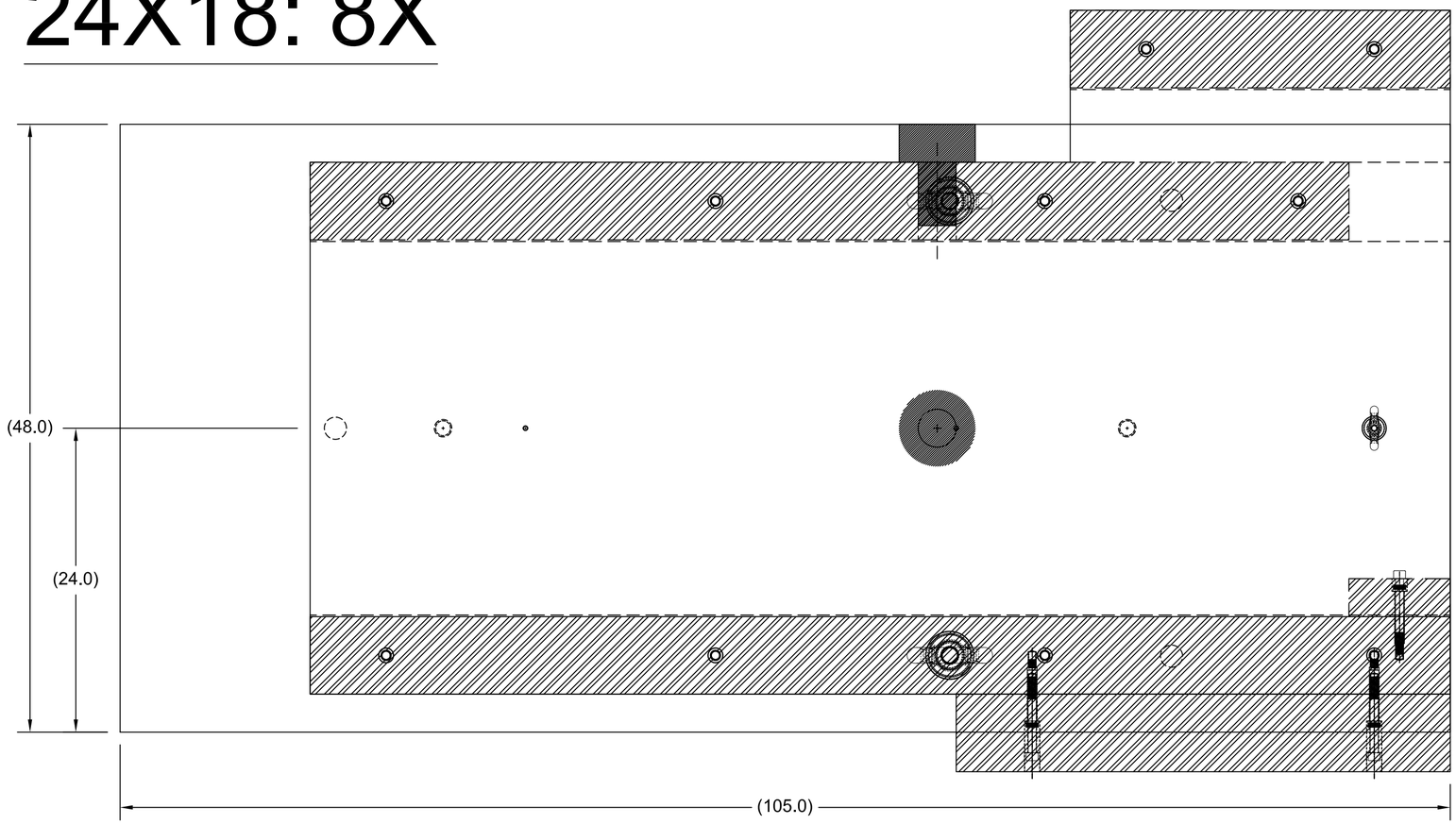

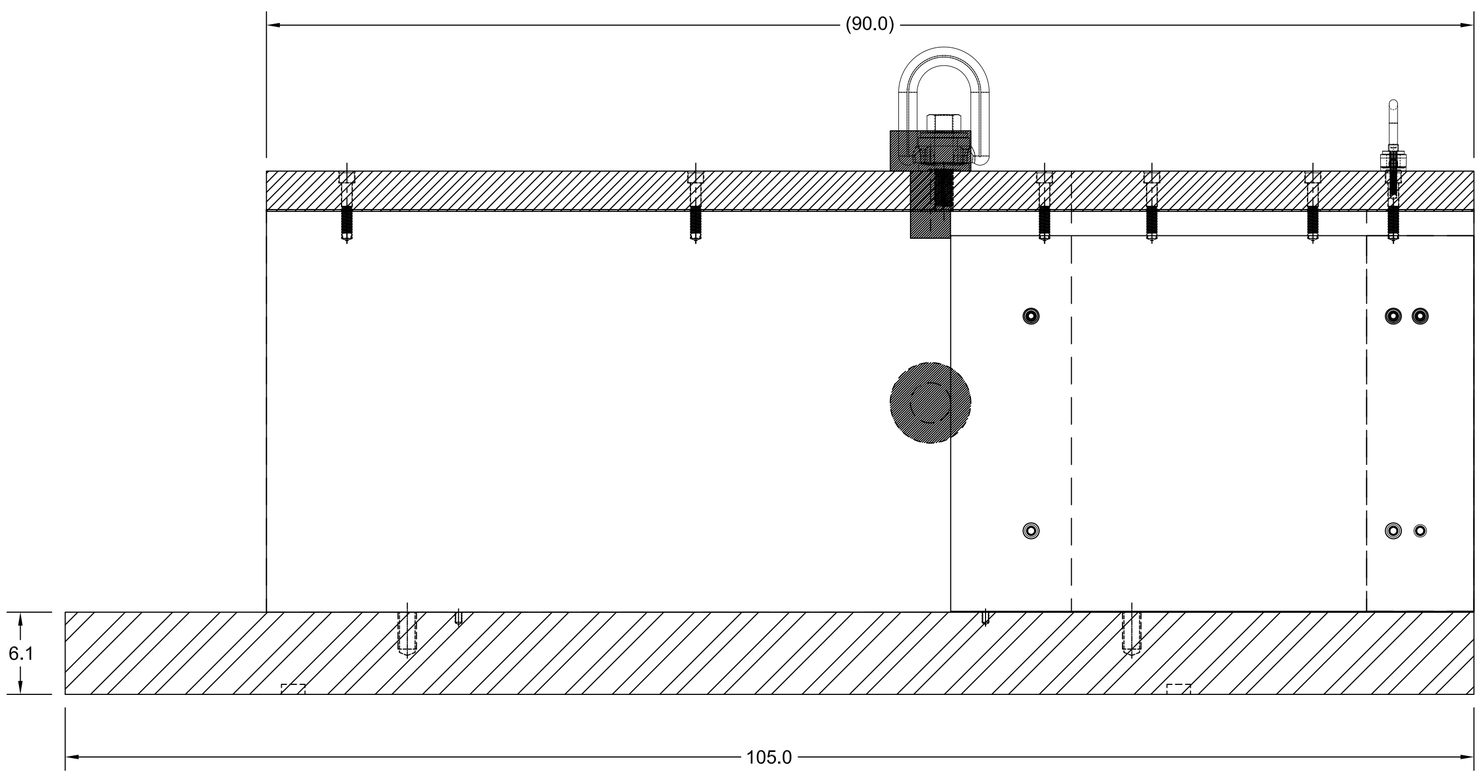

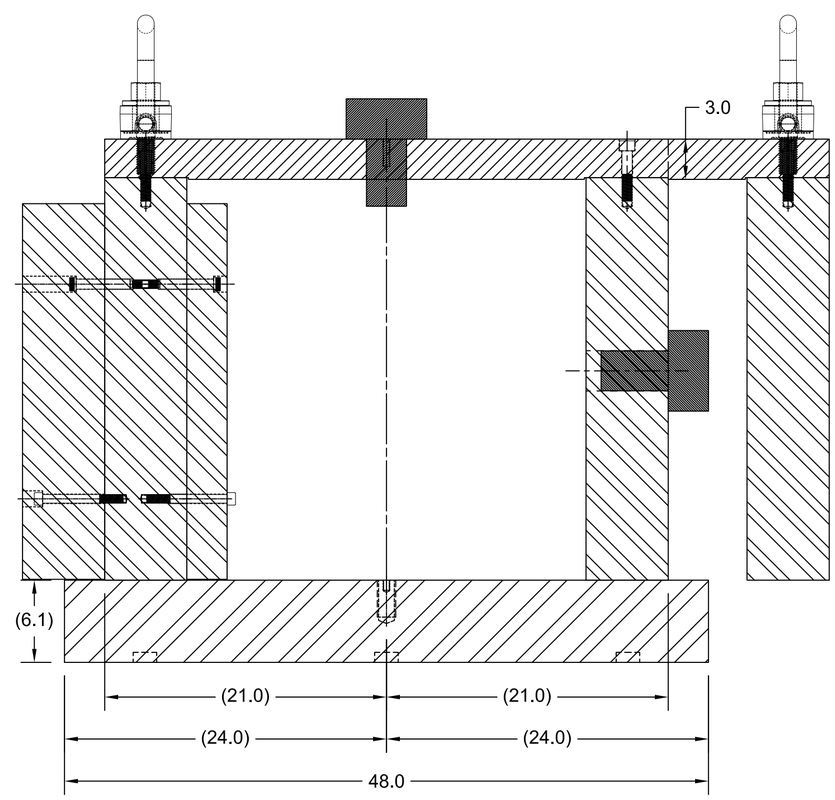

24X18:12X

TITLE: BUTTERDISH SHIELD, ON TABLE-TOP WITH DUMP INSTALLED

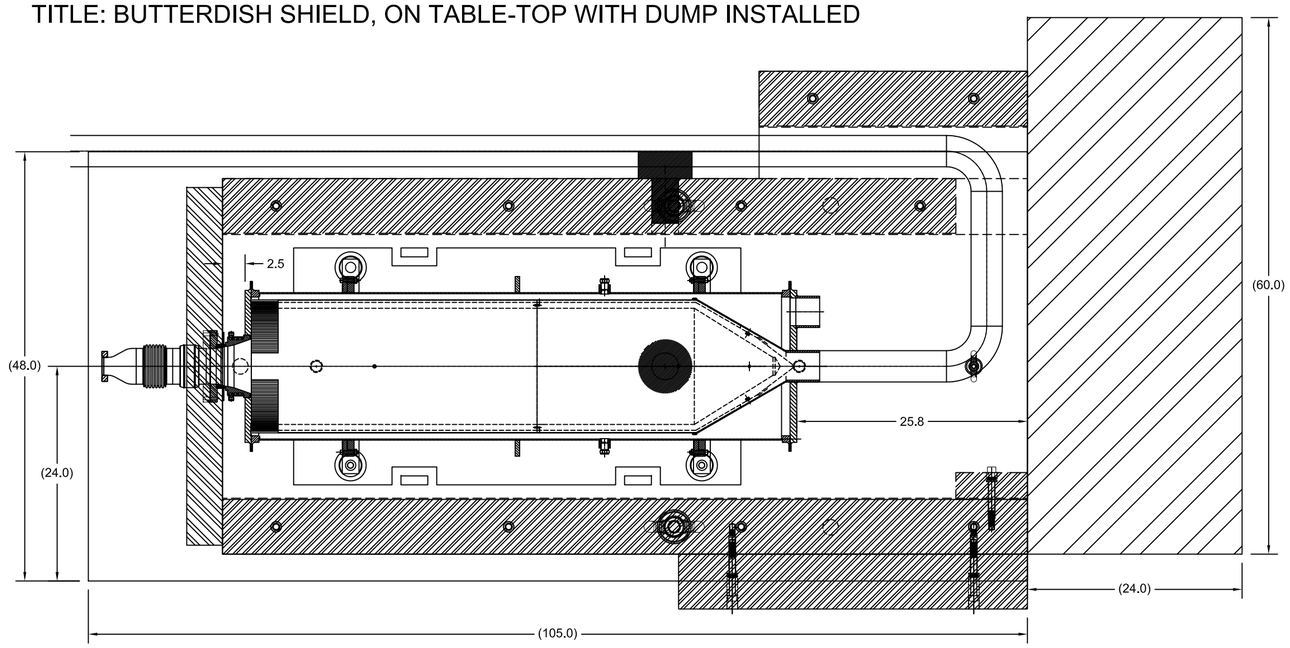

FOR DANA

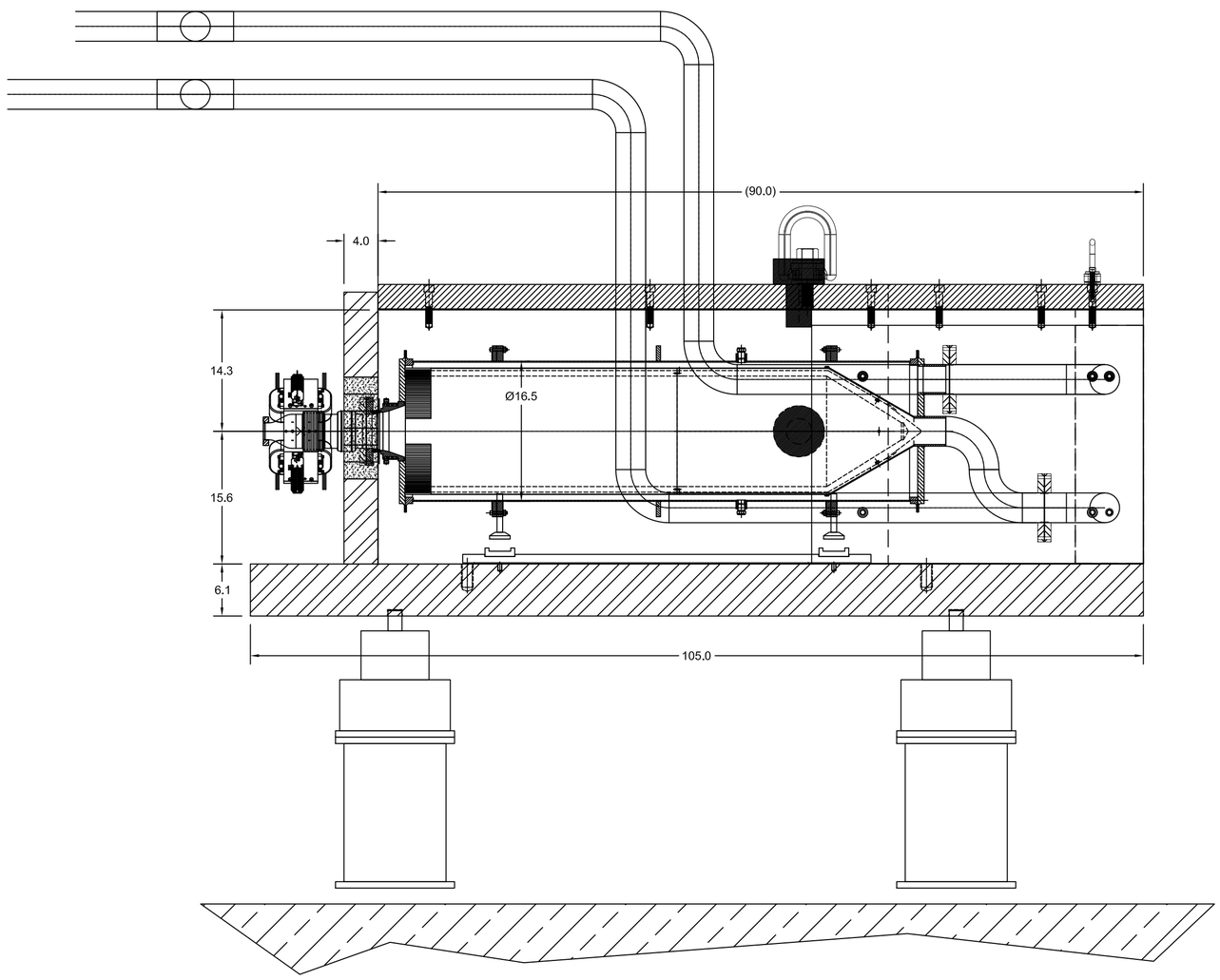

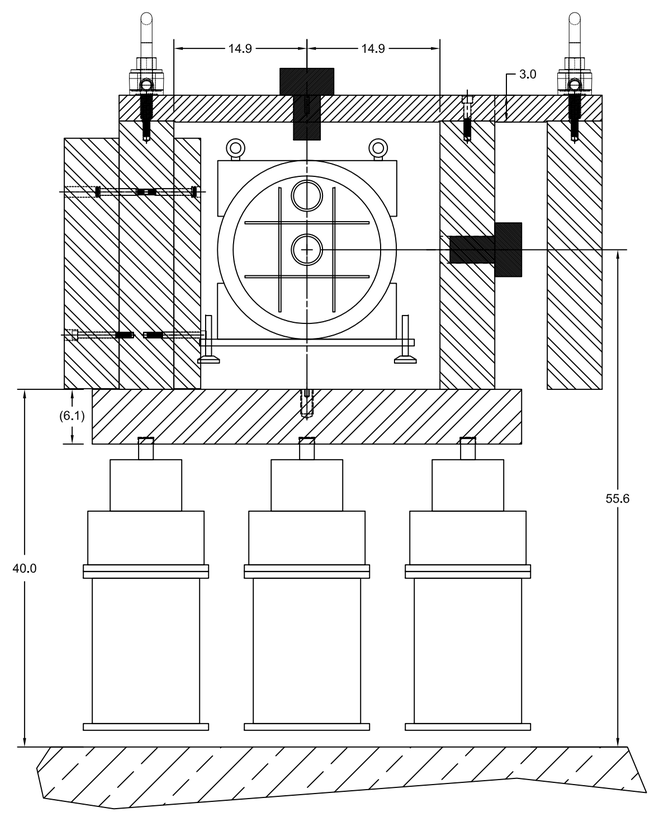

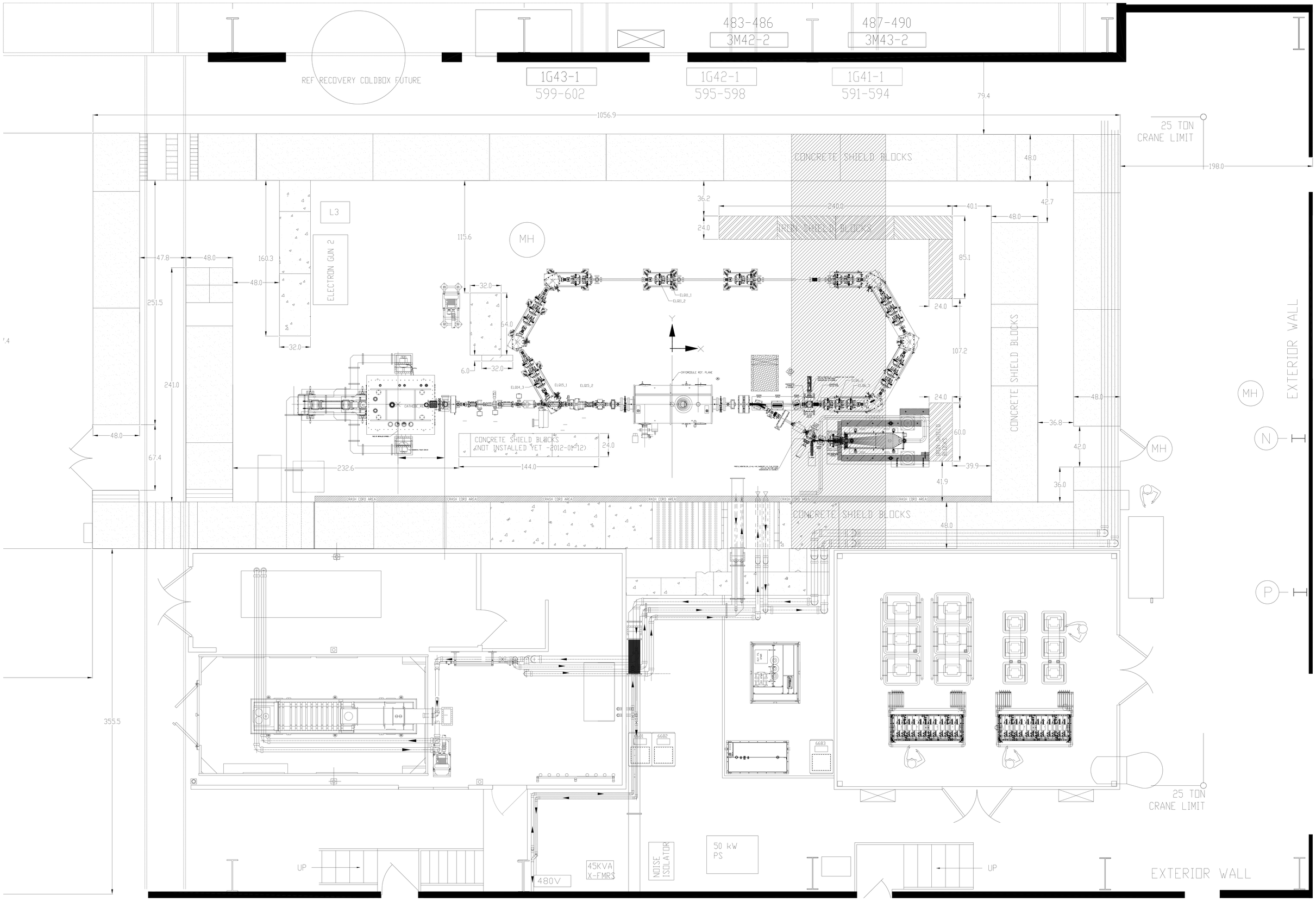
483-486
3M42-2
487-490
3M43-2
REF RECOVERY COLDBOX FUTURE
1G43-1
599-602
1G42-1
595-598
1G41-1
591-594
79.4
1056.9
25 TON
CRANE LIMIT
198.0
CONCRETE SHIELD BLOCKS
48.0
36.2
240.0
40.1
42.7
24.0
IRON SHIELD BLOCKS
85.1
L3
ELECTRON GUN 2
160.3
115.6
MH
47.8
251.5
241.0
67.4
32.0
64.0
6.0
107.2
60.0
36.8
42.0
36.0
39.9
41.9
232.6
144.0
CONCRETE SHIELD BLOCKS
(NOT INSTALLED YET -2012-01-12)
CRYOMODULE REF. PLANE
CATHODE REF
EXTERIOR WALL
N
P
CRASH CORD AREA
355.5
6681
6682
6683
UP
480V
45KVA
X-FMRS
NOISE
ISOLATOR
50 kW
PS

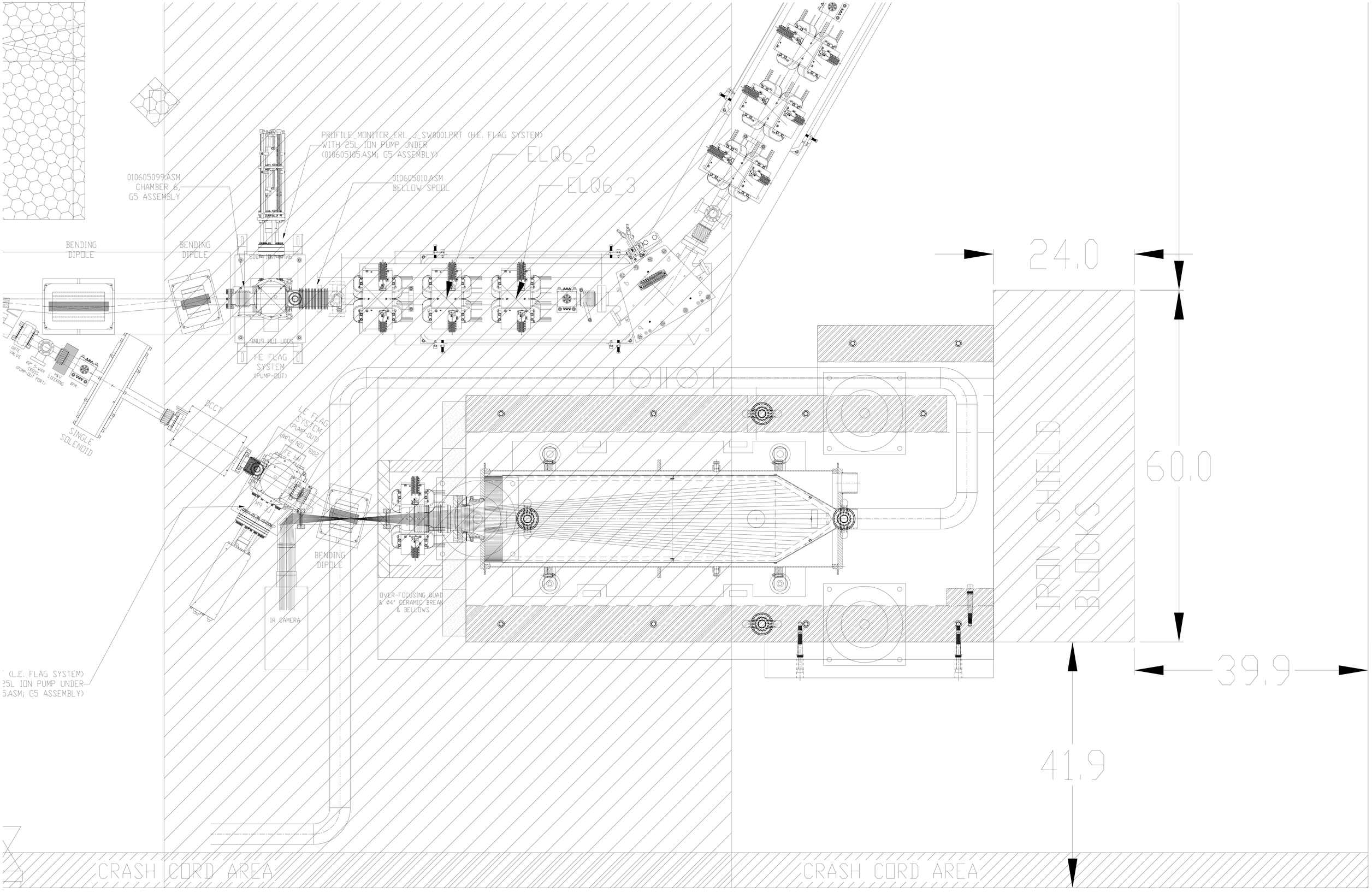
PROFILE_MONITOR_ERL_J_SW0001.PRT (H.E. FLAG SYSTEM)
WITH 25L ION PUMP UNDER
(010605105.ASM; G5 ASSEMBLY)
ELQ6_2
ELQ6_3
010605099.ASM
CHAMBER 8,
G5 ASSEMBLY
010605010.ASM
BELLOW SPOOL
BENDING
DIPOLE
BENDING
DIPOLE
GATE
VALVE
90° 5-WAY
CROSS
(PUMP-OUT PORT)
HR
STEERING
BPM
SINGLE
SOLENOID
ØCCT
H.E. FLAG
SYSTEM
(PUMP-OUT)
200L ION PUMP
H.E. FLAG
SYSTEM
(PUMP-OUT)
200L ION PUMP
BENDING
DIPOLE
IR CAMERA
OVER-FOCUSING QUAD
& Ø4" CERAMIC BREAK
& BELLOWS
IRON SHIELD
BLOCKS
24.0
60.0
39.9
41.9
(L.E. FLAG SYSTEM)
25L ION PUMP UNDER
5.ASM; G5 ASSEMBLY)
CRASH CORD AREA
CRASH CORD AREA

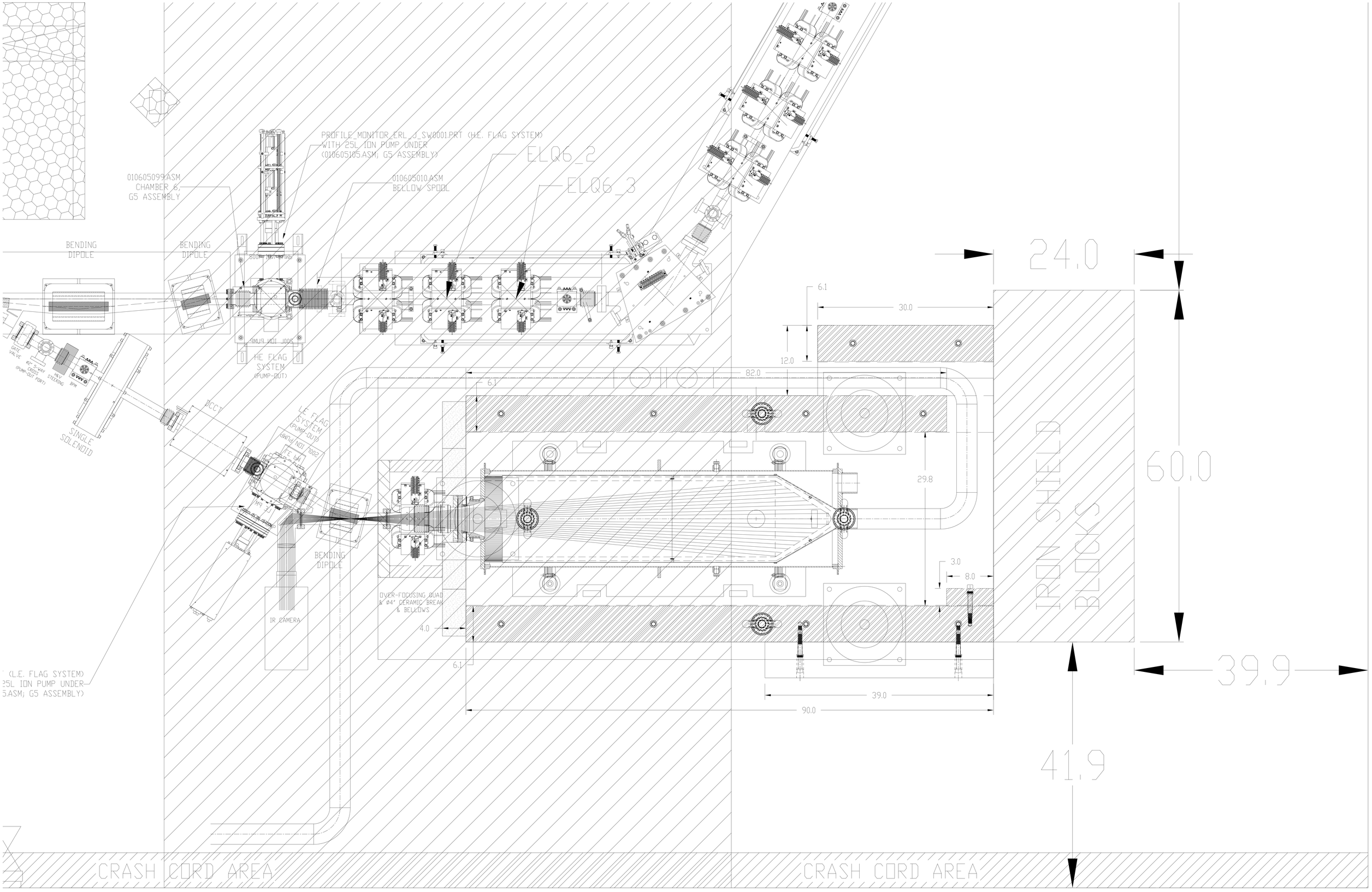
PROFILE_MONITOR_ERL_J_SW0001.PRT (H.E. FLAG SYSTEM)
WITH 25L ION PUMP UNDER
(010605105.ASM; G5 ASSEMBLY)
ELQ6_2
ELQ6_3
010605099.ASM
CHAMBER 8,
G5 ASSEMBLY
010605010.ASM
BELLOW SPOOL
BENDING
DIPOLE
BENDING
DIPOLE
GATE
VALVE
90° 5-WAY
CROSS
(PUMP-OUT PORT)
HE
STEERING
BPM
SINGLE
SOLENOID
ØCCT
H.E. FLAG
SYSTEM
(PUMP-OUT)
200L ION PUMP
H.E. FLAG
SYSTEM
(PUMP-OUT)
200L ION PUMP
BENDING
DIPOLE
IR CAMERA
OVER-FOCUSING QUAD
& Ø4" CERAMIC BREAK
& BELLOWS
(L.E. FLAG SYSTEM)
25L ION PUMP UNDER
5.ASM; G5 ASSEMBLY)
24.0
6.1
30.0
12.0
82.0
6.1
29.8
3.0
8.0
4.0
6.1
39.0
90.0
60.0
39.9
41.9
IRON SHIELD
BLOCKS
CRASH CORD AREA
CRASH CORD AREA

Prepared by: S. Belomestnykh

Date: August 17, 2012

Reviewed by: _____

Date: 10/8/12

Approved by: _____

T. Roser

Date: 10/8/12

ERL RSC Check-Off List for Cold Emission Testing of the ERL SRF electron gun

Completion of this ERL RSC Check-Off List is a prerequisite for cold emission testing.

Upon completion of this check-off list in the MCR, the ERL cold emission testing (CET) of the SRF electron gun may commence.

1. _____ **(LP)** **RSC LOTO has been applied to prevent the 1 MW klystron from being energized. This or equivalent must remain in place until the check-off list is complete.**

2. _____ (IG) Chipmunk operation verified.

3. _____ (RSCC) The shielding has been examined and found acceptable for SRF cavity tests.

4. _____ (LE) ERL block house shielding and barriers inspected and acceptable for CET.

5. _____ (LE) The barriers are in place at both ends of the trench and posted.

6. _____ (LE) The ladder at the power supply house has a locked barrier and is posted.

7. _____ (RCD) Post area between West wall of the ERL and building wall as access prohibited without a RCT.

8. _____ (ACG) Chipmunks required for CET have interlock function checked. (See attached list).

9. _____ (ACG) PASS test is complete for ERL.

10. _____ (LE) Waveguide is in place for 1 MW klystron and is connected to the SRF gun.

11. _____ (RCD) Entrance gates to the ERL block house posted.

12. _____ (RCD) Areas around the entrance gates roped off and posted not to enter without HP for the cavity tests.

13. _____ (RCD) The support building against ERL shielding is posted as no entry without a RCT during the cavity tests.

14. _____ (LE) Area surrounding ERL is posted as no ladders/no climbing.

15. _____ (ACG) All bypasses or temporary jumpers in place have been discussed with RSCC.

16. _____(ACG) ODH interlocks certified.

17. _____(RGDC) Gun registered as an RGD.

18. _____ (LP) The items listed above have been completed.

19. _____ (OC) List completion verified by on-duty operations coordinator.

When the list above is complete then cold emission testing of the ERL SRF electron gun may begin.

When the SRF gun is ready to potentially generate X-rays, the on-duty RCT needs to be in the area to conduct surveys of the shielding and penetration. After the surveys have been reviewed, the configuration of the area posting near the ERL block house will be determined.

RCD	Radiological Control Division: P. Bergh or designee
LE	Liaison Engineer: D. Phillips or designee
LP	Liaison Physicist: S. Belomestnykh or designee
MCRGL	MCR Group Leader: P. Ingrassia or designee
RSCC	Radiation Safety Committee Chairperson: D. Beavis or designee
OC	Operations Coordinator
ACG	Access Control Group: J. Reich or designee
RCT	Radiation Control Technician
IG	Instrumentation Group: M. Minty or designee
CEE	Chief Electrical Engineer: J. Sandberg or designee
RGDC	C-AD RGD Custodian: A. Etkin or designee

CHIPMUNKS			
Name	Location	Interlock [mrem/hr]	Alarm [mrem/hr]
NMO170	North Labyrinth	50	40
NMO171	North Gate	50	40
NMO172	1 MW Waveguide port	50	40
NMO173	50 kW Waveguide area	50	40
NMO174	West cryo pipe exit	50	40
NMO175	South Gate	50	40
NMO176	South Labyrinth	50	40
NMO177	Internal to ERL 1	-	-
NMO177	Internal to ERL 2	-	-

Collider-Accelerator Department

BROOKHAVEN NATIONAL LABORATORY

Building 911B – P.O. Box 5000
Upton, NY 11973-5000
Phone 631 344 4116
Fax 631 344 5954
kinyip@bnl.gov
www.bnl.gov

managed by Brookhaven Science Associates
for the U.S. Department of Energy

Memo

date: *October 1, 2012*

to: *RSC, D. Beavis*

from: *K. Yip*

subject: *Radiation due to 3.5 MeV electron beam*

This document is written to report on the radiation dose due to the possibility of electron beam in the Energy Recovery LINAC (ERL) facility hitting concrete wall. The tool used here is the simulation software "MCNPX" with the newest available version 2.7.0 at the time of this work.

1. Simulation Setup

The maximum kinetic energy of the electron beam considered here is 3.5 MeV (even though it may be higher than what can be achieved realistically). The shielding setup is just simply a block of 4 foot normal/light concrete (with a density of 2.35 g/cm3), which is the case for the roof of ERL. In the simulation, electrons hit straight (90o) into the concrete wall. We examine the radiation dose at 1 foot and 20 foot (as if it is the ceiling) above (or behind, as the gravitational force is ignored anyway) the concrete. The initial input file for the simulation is attached in the Section 3 at the end of this document.

2. Results

Initial attempt was to use 2-D mesh tally (a tabulation in MCNPX) to find the doses. But very quickly, it has become obvious that this method would not yield enough statistics. Therefore, F5 point/ring detectors (a variational method for tabulation) have been employed to find the doses behind the 4 ft concrete. The results of dose are shown in rem per incident-electron.

Figure 1 and Figure 2 show the doses in the unit of rem per incident-electron versus the radial distances from the original transverse beam center (x=0, y=0) at 1 ft and 20 ft above/behind the concrete respectively.

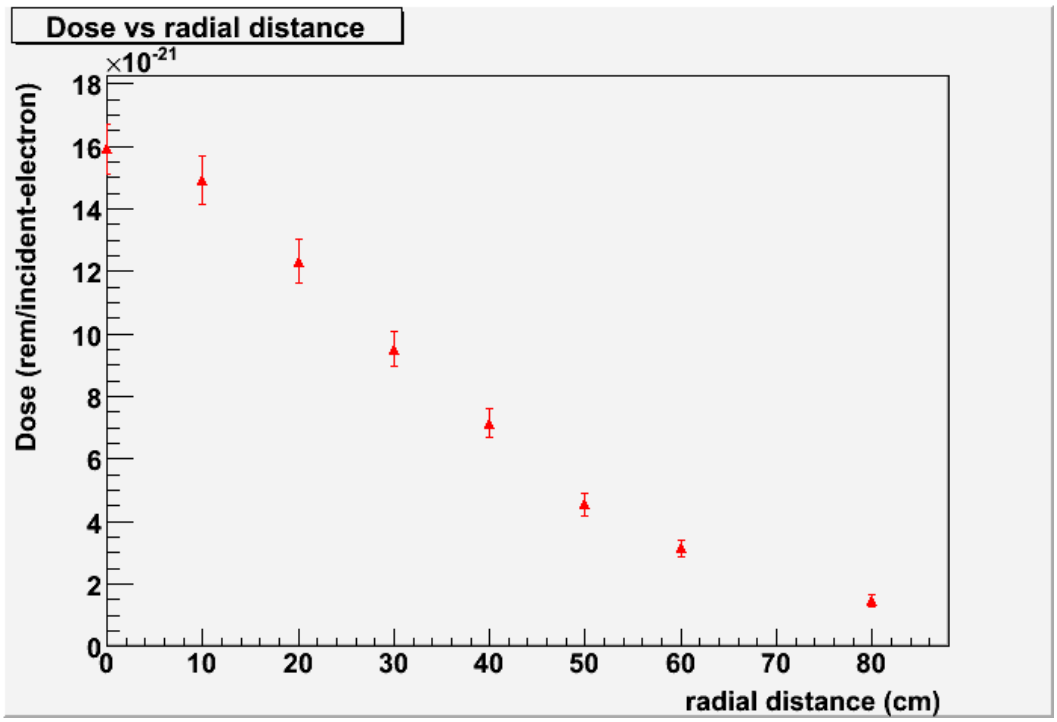

Figure 1: The doses (rem per electron) at one foot above/behind the concrete versus the radial distance from the original transverse center (x=0,y=0) of the beam.

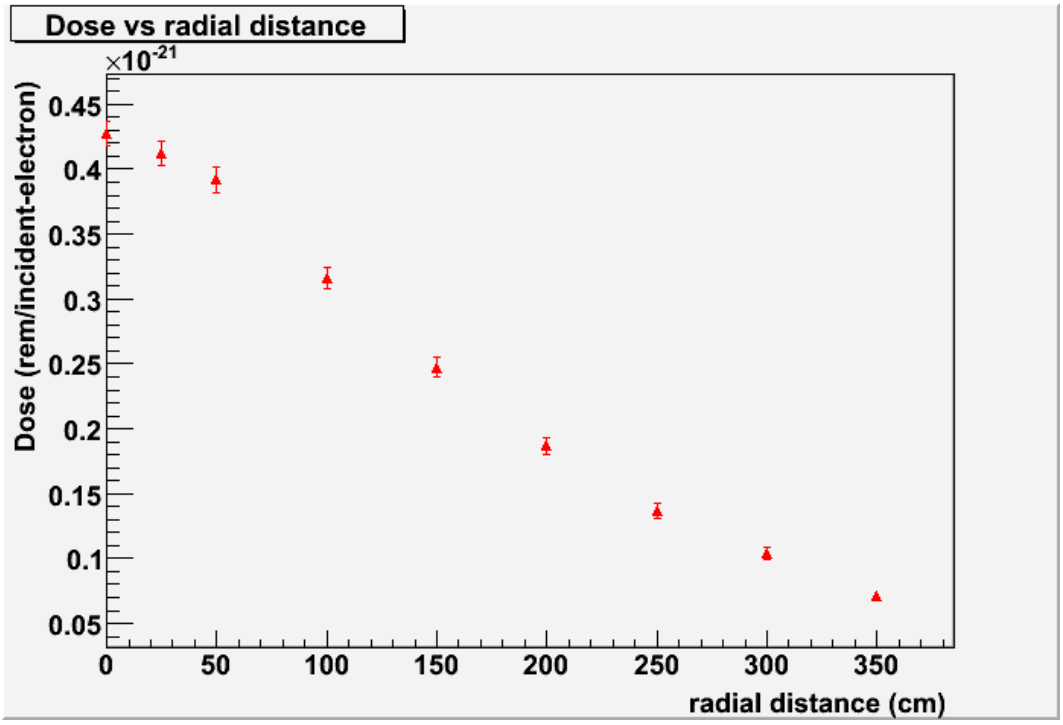

Figure 2: The doses (rem per electron) at 20 feet above/behind the concrete versus the radial distance from the original transverse center (x=0,y=0) of the electron beam.

For illustration, at 1 ft and 20 ft above the concrete, the highest doses are 1.591×10-20 and 4.272×10-22 per electron; and if the peak current is 2 μA, the doses would be 0.715 mrem/hour and 0.0192 mrem/hour.

All the doses here are due to photons as the energy is too low (ie. below the photonuclear for the materials in question) to produce neutrons. The plots shown above are the results of repeated runs with an accumulated statistics of 500 million events.

3. Appendix: MCNPX input code

```
ERL radiation behind 4 ft concrete --- Sept. 24, 2012
c
c Concrete walls
c
1 1 -2.35 -1 imp:n,p,e,h=1
c
c vacuum
c
2 0 -2 imp:n,p,e,h=1
3 0 -3 imp:n,p,e,h=1
c
c
c -- don't care region
c
999 0 1 2 3 imp:n,p,e,h=0
c ====================================
c ====================================
c
c z=0 is where the concrete starts
c x=y=0 is the center of the beam
c
c 4' concrete
c
1 rcc 0. 0. 0. 0. 0. 121.92 100
c
2 rcc 0. 0. 0. 0. 0. -0.2 100
c
c
c this is exactly 20'
c
c 3 rcc 0. 0. 121.92 0. 0. 609.6 400.
c
c Give it a bit more space
3 rcc 0. 0. 121.92 0. 0. 616.0 400.
c
c
c -------------------------------------------------------
```

```
c -------------------------------------------------------
c
c
c Materials
c
c Concrete
m1 1001 .1686 8016 .5762 13027 .0219 14028 .19350 14029 .00980 14030 .00650 &
20000 .0191 26056 .0044
mx1:h j j j j j j 20040 j
mx1:p j j j j j j 20040 j
c
SDEF erg = 3.5 par=3 dir=1.0 vec = 0. 0. 1.0 x=0. y=0. z=-0.1 wgt=1
c
c
DBCN 52734873
c
phys:n 3.6
phys:h 3.6
c
c biased (hoping for better statistics)
c
phys:p 3.6 2j 1
phys:e 3.6
c
mode n e p h
c
c
c
nps 50000000
prdmp 5000000 5000000 1 10 5000000
c prdmp 2j 1
c
print
c
c Energy Bins (upper limits)
e0 1.0e-7 1.e-5 1.e-3 0.01 0.1 1. 2. 3.5 10.
c
c
F5:p 0. 0. 152.4 0
F15z:p 152.4 10. 0
F25z:p 152.4 20. 0

F35z:p 152.4 30. 0
F45z:p 152.4 40. 0
F55z:p 152.4 50. 0
F65z:p 152.4 60. 0
```

```
F75z:p 152.4 80. 0
c
F95:p 0. 0. 731.52 0
F105z:p 731.52 25. 0
F115z:p 731.52 50. 0
F125z:p 731.52 100. 0
F135z:p 731.52 150. 0
F145z:p 731.52 200. 0
F155z:p 731.52 250. 0
F165z:p 731.52 300. 0
F175z:p 731.52 350. 0
c
df0 iu=1 fac=2.77777777778E-4 log ic=10
c
c
c tmesh
c rmesh1:p dose 10 1 1 2.77777777778E-4
c CORA1 -60. 99i 60.
c CORB1 -60. 99i 60.
c CORC1 116.92 126.92
c rmesh11:p dose 10 1 1 2.77777777778E-4
c CORA11 -400. 99i 400.
c CORB11 -400. 99i 400.
c CORC11 726.52 736.52
c cmesh21:p dose 10 1 1 2.77777777778E-4
c CORA21 0. 99i 60.
c CORB21 116.92 126.92
c CORC21 360.
c cmesh31:p dose 10 1 1 2.77777777778E-4
c CORA31 0. 99i 400.
c CORB31 726.52 736.52
c CORC31 360.
c endmd
```

C-AD

Radiation

Safety Minutes of the Subcommittee Meeting of Sept. 5 & 20, 2012

Committee

Issued: Oct. 17, 2012

Subject: ERL Low Power Test

Present 9/5/12: D. Beavis, A. Etkin, R. Karol, N. Kling, D. Phillips, B. van Kuik, I. Ben-Zvi, M. Minty, P Sampson, A. Zaltsman, B. Sheehy. P. Sullivan, C. Theisen, T. Seda. L. Hammons, C. Montag, J. Dai, W. Xu, A. Zaltsman, and D. Kayran

Present 9/20/12: D. Beavis, A. Etkin, R. Karol, B. van Kuik, H. Kahnhauser, C. Theisen, C. Montag, and J. Sandberg

The ERL would like to conduct a series of simple low power tests before the ARR has been conducted to verify that accelerator is ready to operate. To conduct the limited low power tests the Department has requested that the RSC review the plans for the test and make recommendations that would provide for safe low power operation. The Department would need to request an exemption of the Accelerator Order. The exemption requires review by the Laboratory Environmental Safety and Health Committee (LESHC), which will make a recommendation to the ALD for ES&H and the DOE Area Office.

The exemption request is using Paragraph 3.c.(2) of the Accelerator Order, DOE Order 420.2C. This is implemented in the Accelerator Safety Subject Area[1] of the SBMS. An initial draft of the request[2] was provided. The exemption request was not reviewed at this meeting but will be at the next. The materials were not distributed well enough in advance to provide members with sufficient time to review. A meeting will be scheduled next week to make final recommendations. This meeting will provide for an overall introduction.

The low power test is considered critical for this import R&D work at ERL. It is also important in the advancement of projects such as electron ions colliders including eRHIC. However, the committee must ensure that the Department has had proper internal reviews so that it does not take on too much risk.

Description

I. Ben-Zvi made a presentation[3] of the plans for the low power test. The test will be conducted in two phases. The first phase will have the electron beam from the gun be

transported into a Faraday Cup located close to the gun. The beam will not be bent into the vertical chicane. The second phase will have the electron beam transported to a G5 dump which will be located in a straight section downstream of the five-cell cavity. The cavity can be used to accelerate the beam to energies up to about 23 MeV.

The gun is expected to be commissioned in December. The initial goal for the gun is to achieve an energy of a least 1 MeV and increase to a desired energy of 2.5 MeV. The initial power for the gun is expected to be 25 micro-Watts. The power of the beam from the gun is expected to eventually reach approximately 1 W during the two phases. The facility design was based on a continuous loss of the gun beam of 1000 W, although the as built configuration has not been compared to the initial configuration[4] used in the analysis.

Preceding the low power beam tests will be a Cold Emission Test (CET) of the gun. This should provide some initial radiation surveys external to the shielding for x-rays emanating from the gun area (with no beam). The CET will be conducted as an RGD, and under all the C-AD RSC requirements.

Gun Beam to faraday Cup.

It is suggested that the first dipole be RS LOTOed during the first phase of the testing. This will prevent any possible deflection of the beam. **The external dose from a fixed source along the beam line or at the Faraday cup for 70 Watts at 2.5 MeV is less than 0.3 mrem/hr if the shadow shield does not protect the exterior area.**
The calculation uses broad beam TVLs and is expected to be conservative.

Recommendations:

1. RS LOTO first dipole. **(CK-ERL-fy2103-821)**
2. Place alarm level for chipmunks at 5 mrem/hr. **(CK-ERL-fy2103-822)**
3. Escalate alarm levels as surveys demonstrate the adjacent areas are properly protected. **(CK-ERL-fy2103-823)**
4. Post area around the shielding as a Controlled Area- TLD required. **(CK-ERL-fy2103-824)**
5. Provide temporary posting to keep unauthorized people away until area surveys are complete. **(CK-ERL-fy2103-825)**

Gun to G5 dump

The second phase of the test has the low energy beam transported to the G5 dump. The beam will be transported through the five-cell cavity and at some point will be accelerated to 20-23 MeV. Any dipole along the transport must be evaluated for being all potential energies.

The vertical chicane has four vertical bends. The first bend is 15 degrees down followed by 30° up, the 30° down, and then 15° up. Each dipole has a power supply that can deliver 10 amps. A clear statement of the bending power of each will need to be provided

to the committee. It was noted that they are intended to run at 80-90 percent of the maximum current. The committee recommended that C. Montag and D. Kayran report back to the RSC on the optics elements.

The horizontal bending dipoles will be RS LOTOed to prevent beam from being directed towards the side walls, except for possible beam fault studies. The vertical bends in the chicane could direct the beam to the roof. The committee requested that Kin Y. examine the issue of beam directly striking the roof shielding for an estimate of the dose on the shielding roof and the building roof. The calculation has been completed[5] and will be reviewed at the next meeting.

The experiment will limit the beam current with a series of software and hardware controls including the duty factor. There was substantial discussion on the methods the experiment employ for the administrative controls. They should provide a document clearly stating how this is conducted, controlled, and authorized. A limited number of personnel will be authorized to change the administrative controls and its software. The work will be performed under the ERL conduct of operations. Operations procedures will have the operator monitor the beam power and take appropriate action if the beam power exceeds the limits for the test. The controls are not of the rigor that the committee typically uses to prevent several factors of ten intensity excursion. The ACS will utilize either the present interlocking chipmunks or the interior non-interlocking chipmunk to provide the appropriate level of assurance that radiation levels outside the shielding do not become a concern. This may include changing the two monitor chipmunks to become interlocking. A specific proposal will be presented by R. Karol and D. Beavis at the next meeting.

The committee requested that J. Sandberg and C. Theisen examine the effort to upgrade the two non-interlocking chipmunks to interlocking. After the meeting A. Etkin suggested that these two chipmunks be tied into adjacent interlocking chipmunks. They already have separate readout and this technique would require a small effort, although not usually considered acceptable for a permanent installation. It is expected that the full committee will approve this short term method for implementing the chipmunk interlocks on these two chipmunks.

The transport to the dump should be divided into two sub-phases. After delivery of 1-3.5 MeV beam to the dump a survey shall be conducted with controlled and stable conditions. In addition, at least one fault study shall be conducted at the chicane. RCTs are expected to be at the area for the initial tuning.

The low power tests are expected to operate for up to one week per month for several months. After initial surveys the expected occupancy of adjacent areas should be considered in conjunction with the “routine” low power testing. The low power gun test may require from 100 to 1000 hours of operation to provide the necessary understanding of the gun operation.

The dose rate outside the shielding has been estimated[6] for 25 MeV beam on the G5 beam dump. **For 70 watts at 25 MeV the dose rate in the isleway by the power supply building will be 0.004 mrads/hr.**

Recommendations:

1. Consideration of the effectiveness of the configuration for all phase must be considered. For example, an operator may decide to not transport the beam to the G5 dump but to take it to the Faraday cup. If this is to be allowed then the ACS must protect against the faults. **(CK-ERL-FY13-826)**
2. RS LOTO the dipole after the five-cell cavity. **(CK-ERL-FY13-827)**
3. The beam will go through the vertical chicane between the gun and the five-cell cavity. Review the analysis of dose on the shielding roof and the building roof submitted by Kin Y. **(CK-ERL-FY13-828)**
4. There is no access allowed for the shielding top. **(CK-ERL-FY13-829)**
5. The Project should provide a table of maximum bends at a set energy. This should be accurate to 5%. If necessary consider upper current limits on the dipole power supplies. **(CK-ERL-FY13-830)**
6. The Project should provide the maximum expected quad steering from a single quadrupole or a set of quadrupoles. **(CK-ERL-FY13-831)**
7. Provide the administrative means to limit beam power (current) and control changes. **(CK-ERL-FY13-832)**
8. A detailed plan for limiting the dose outside the shielding using the chipmunks must be documented. **(CK-ERL-FY13-833)**
9. Documentation on optical element performance. **(CK-ERL-FY13-834)**
10. Establish a maximum amount of time for low power testing before an ARR is performed. A ninety-day duration for low power testing has been proposed. **(CK-ERL-FY13-835)**
11. Crane cab must be prevented from being over the roof shielding. **(CK-ERL-FY13-836)**
12. Fault study at the chicane and others as appropriate. **(CK-ERL-FY13-837)**

References

1. https://sbms.bnl.gov/sbmsearch/subjarea/40/40_SA.cfm?parentID=40
2. E.T. Lessard ,"Exemption request for Low power Testing of ERL SC Gun and 5-Cell Cavity", August 30, 2012
3. I. Ben-Zvi PowerPoint presentation, Sept. 5, 2012;
4. D. Beavis memorandum, " Dose rate Estimates for ERL Penetrations ", March 28, 2008, http://www.c-ad.bnl.gov/esfd/RSC/Memos/ERL-Penetrations3.pdf
5. Kin Yip, "Radiation due to 3.5 MeV Electron Beam", Oct. 1, 2012, http://www.c-ad.bnl.gov/esfd/RSC/Memos/Kin_Radiation_MeV_10_1_12.pdf
6. D. Beavis memorandum, "G5 Beam Dump Simulation", Jan. 12, 2012; http://www.c-ad.bnl.gov/esfd/RSC/Memos/G5%20Beam%20Dump%20Simulation.pdf

CC:

RSC minutes file
RSC ERL file
RSC
Attendees

Collider-Accelerator Department

BROOKHAVEN NATIONAL LABORATORY

Building 911B – P.O. Box 5000
Upton, NY 11973-5000
Phone 631 344 7124
Fax 631 344 5568
beavis@bnl.gov
www.bnl.gov

managed by Brookhaven Science Associates
for the U.S. Department of Energy

Memo

date: *January 13, 2014*

to: *RSC*

from: *D. Beavis*

subject: *ERL Roof Transition*

The initial design of the ERL roof was at a fixed height of 13 feet above the floor. To aid in rigging operations the central section of the roof was raised to 14 feet forming a transition at both end of the area. To examine the impact of this change on radiation dose through the roof a simple model was used in MCNPX[1].

A target of cooper was placed at z=0 with the roof transition at z=200 cm. The roof over the target is at y=300cm and after the transition the roof is at 270cm. In both areas the roof is 120cm thick and composed of light concrete. The copper target is 10cm long and 1.5 cm in radius. The model has rotation symmetry about the z-axis to simplify the calculations. Figure 1 show the zx view of the geometry.

[1] MCNPX version 2.7C was used for the analysis. D. PELOWITZ (ed.), "MCNPX User's Manual", Version 2.7.0, Los Alamos National Laboratory, LA-CP-11-00438 (2011).

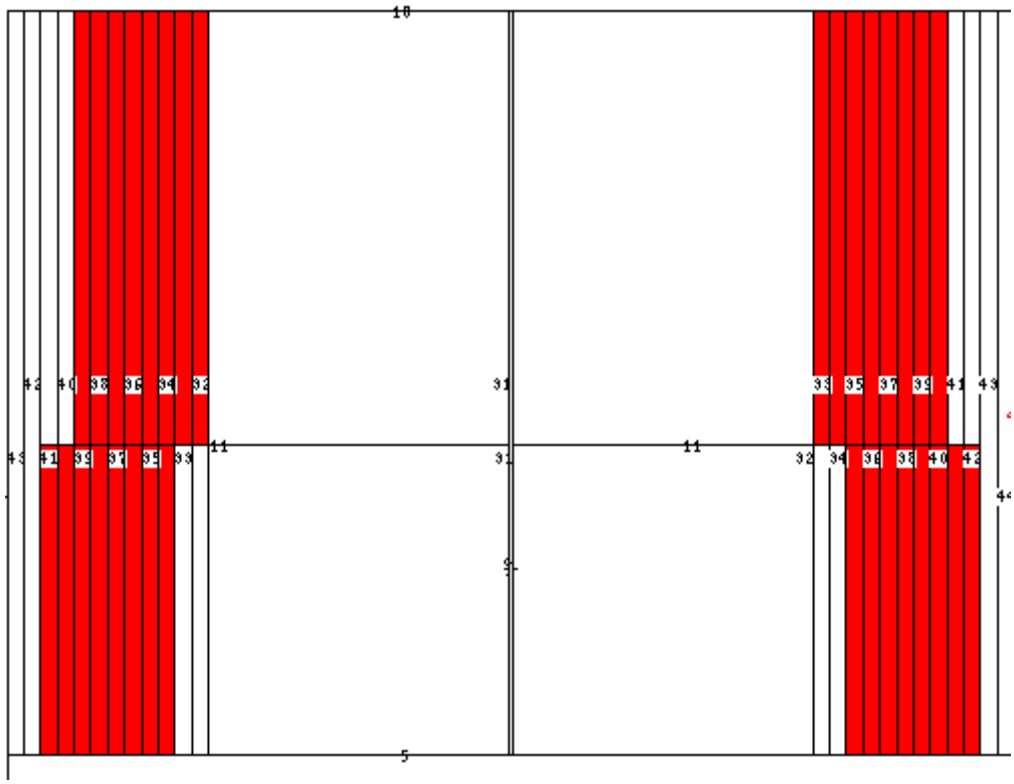

Figure 1: Model used to simulate ERL roof transition.

A pencil beam of electrons was transported into the target and the electrons and photons tracked. The production of neutrons was ignored in this treatment. The side wall was divided into 15cm layers to allow for changing the importance factors as a function of depth in the concrete. Fluence to dose conversions factors were used to tally the dose per electron at different depths in the concrete and as a function of z. The results for two radii are displayed in Figure 2. The radius of 390 cm corresponds to the top of the roof section before z=200 cm. The dose per electron (blue squares) is consistent with a distribution for three feet of light concrete except for a minor change related to the geometry change at z=200. The dose per electron (green circles) at a radius of 390 cm is consistent with the distribution for four feet of light concrete with a sharp rise near the transition, where it sees effectively one foot less of concrete.

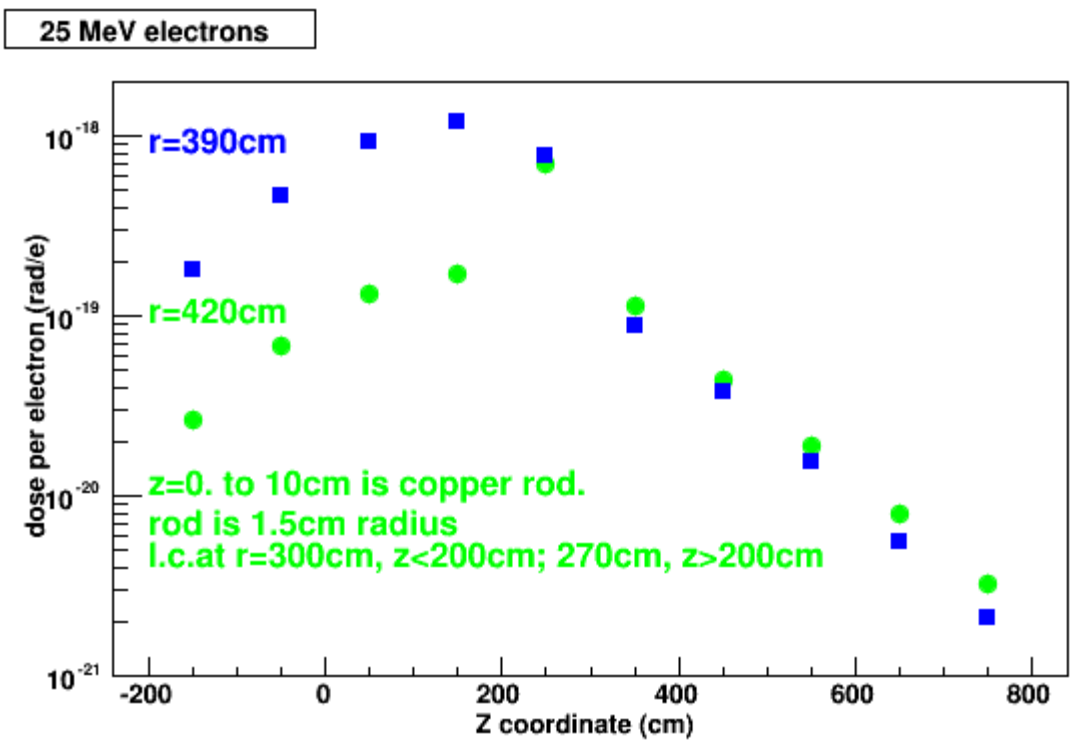

Figure 2: Dose per electron at radii of 290 cm and 320 cm. The roof transition occurs at z=200.

The dose rate through the roof and at the transition is dependent on the beam power on the target. Ten Watts of beam power corresponds to $9*10^{16}$ and $9*10*^{15}$ e/hr for energies 2.5 MeV and 25 MeV, respectively. Point detectors were also used in the analysis and were used to get a slightly higher dose than the flux average over a distance of a meter. The dose rates near the transition for 10 Watts of electron beam are 0.006 mrem/hr and 7.1 mrem/hr for energies of 2.5 MeV and 25 MeV respectively. Access to the roof is not allowed when the Gun or Five-Cell Cavity are being operated. There are some large cracks between the roof beams that form the roof. The dose rates out these cracks could be as high as 1.1 rem/hr (2.5 MeV) and 5.8 rem/hr (25 MeV) if the entire source can shine directly through the crack. Although the actual dose rates are expected to be smaller and not represent whole body exposure they are still a serious concern if personnel access the roof.

The dose rate as a function of depth was tallied and can be used to examine the effective attenuation of the shielding. The results for 2.5 and 25 MeV electrons are shown in Figure 3 for the bin 100cm<z<200cm, where the peak of the dose distribution occurs. The lines in the plot are eyeball fits ignoring the first point. The corresponding TVLs are 36 cm and 20 cm for 25 MeV and 2.5 MeV respectively. These results can be used to extrapolate to thicker shields if required.

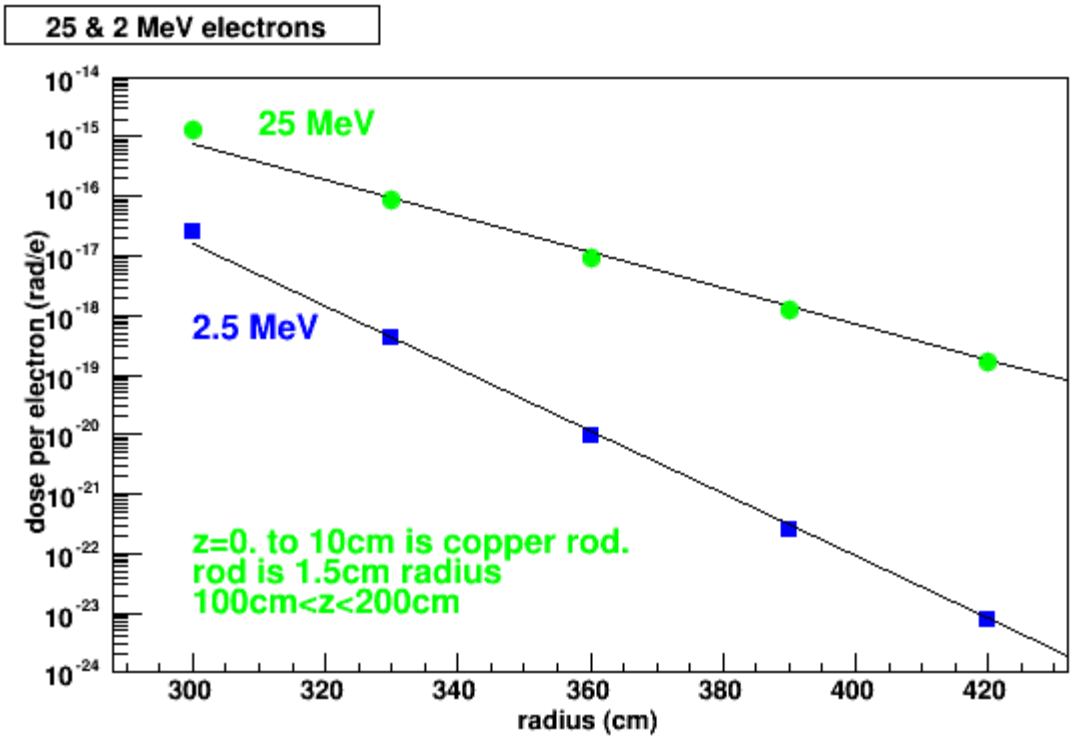

Figure 3: The photon dose through the roof light concrete for 2.5 MeV (blue squares) and 25 MeV (green circles) striking a copper rod. The concrete begins at a radius of 300 cm.

The roof transition appears to produce a localized elevated dose rate consistent with three feet of effective shielding. The dose rates for the 10W test are not an issue for the transition. The radiation hazards from other weaknesses such as the cracks or the roof ODH vent are probably more relevant concerns if someone accesses the roof. For higher power tests in the future it will be important to correlate the dose rates at the chipmunks to the dose rate on the roof including the weak locations.

CC: RSC
D. Kayran
D. Phillips
W. Xu
I. Ben-zvi

C-AD

Radiation

Safety Minutes of RSC Subgroup Meeting of March 13, 2014

Committee

Issued: March 13, 2014

Subject: Review of ERL Dump Prints

Present: D. Beavis, D. Phillips, G. Mc Intyre, and J. Fite

The shielding prints for the ERL beam dump were reviewed. Most of the prints have been signed earlier in the year as QA-3. The steel shielding around the beam dump is being used as area shielding so all the prints relevant to the shielding need to be changed to QA-1. Assembly prints that show the integration of the beam dump and the shielding can remain QA-3.

Extraction line assembly views are given at the bottom of these minutes to aid in understanding of the discussion. A full set of large prints was used for the review.

There is a steel shield between the dipole and the beam dump. The original purpose of this shield was to provide for equipment protection from the back-shine from the beam dump. However, portions of the beam dump are struck by electrons that are at the same elevation as the horizontal seams in the concrete wall. The x-ray transmission through the seams is very sensitivity to the source elevation. In addition, the analysis of interlocks and faults has not been completed for the transport at and beyond the first dipole. An incorrect set-point of the last dipole or if the magnet turns off will cause the beam will strike the Pb shield. It was decided that the Pb shield should be considered as area shielding and the prints for the Pb shield be upgraded to QA-1.

The RSC Chair noted that he is not a fan of stacking small Pb bricks to make shields and would encourage projects in the future to make such shields out of larger blocks that cannot be moved by hand. Naturally, there are economic and schedule issues associated with such construction biases. The bricks are overlapped in one dimension but not the other. This was not considered to be a problem. However, the Pb assembly will need to be banded and posted.

Guidance to the project was provided by K. Yip on the Pb shield design to protect the equipment. The details of the calculation or at least the results need to be archived.

There are two three-inch diameter holes with associated plugs. The plug on the six-inch thick plate was recommended to be changed so that it completely fills the hole rather than the last three inches. The plugs can be made flush with the outside of the steel surface rather than a large protrusion. Tack welding the plugs in place was considered acceptable in case the ports are needed for future use.

The project would like to change the design of the end steel. A cast-iron B block will be centered about the beam dump in both vertical and horizontal directions. This will eliminate in the shield materials near beam height. The final design needs to consider whether the cast-iron B block needs shielding on top. It was noted that the block serves to shadow the labyrinth wall from both losses in the beam lines and from the radiation generated in the beam dump.

Finally, it was noted that the 22 MeV beam transport downstream of the first dump bending magnet may not be in place. The configuration for beam operations must be determined and analyzed before beam is taken to the beam dump.

ATS-ERL-May 1, 2104-(Beavis & Mc Intyre)

Complete beam dump items:

1. Update appropriate prints to QA-1 including the Pb shielding
2. Band and post the Pb shield.
3. Archive the results of the Pb analysis
4. Modify plug and attach both
5. Finalize end shielding design
6. Determine configuration past first dump dipole and analyze.

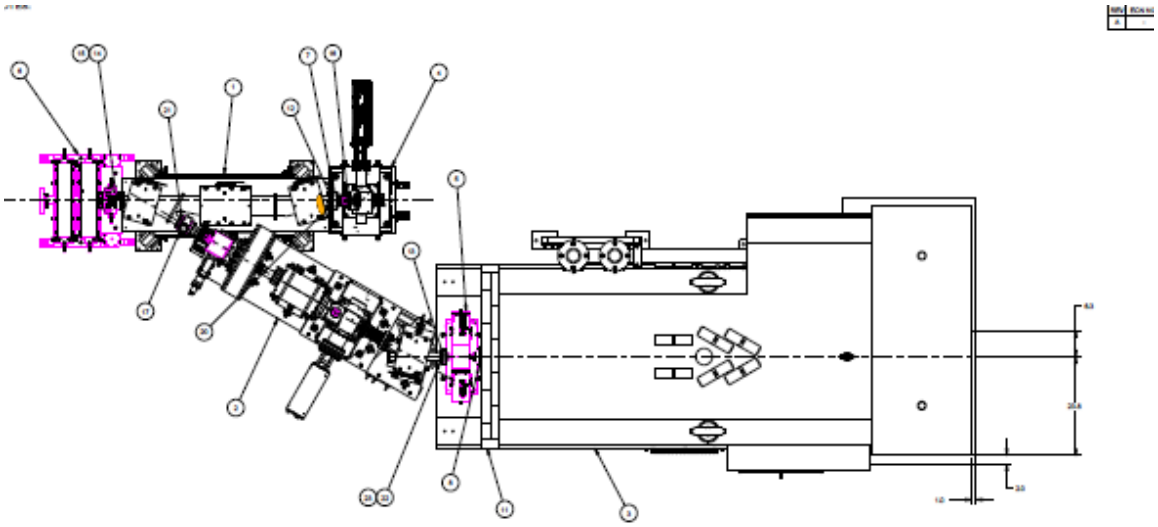

Figure: Plan view of shield and dump area, drawing 010606213.

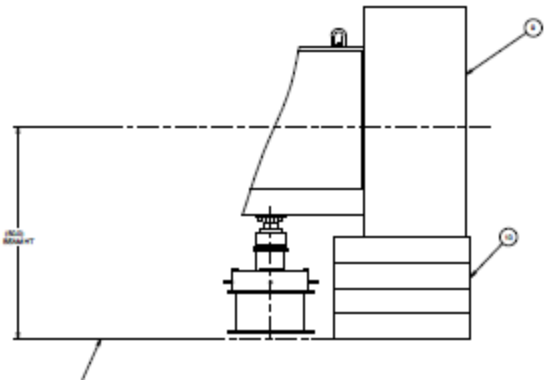

Figure: Side view of beam dump end and cast ion B block, drawing 010606213.

CC:

RSC minutes file
RSC
Attendees
W. Xu
I. Ben-Zvi
D. Passarello
T. Blydenburgh
D. Kayran

C-AD

Issued: August 9, 2013

Radiation

Safety Minutes of RSC Subcommittee of August 1, 2013

Committee

Subject: Beam Current Monitoring and Limit for ERL Low Power Test

Present: D. Beavis, A. Etkin, R. Karol, M. Minty, P. Sullivan, C. Schaefer, C. Theisen, J. Reich, B. Sheehy, L. Hammons, M. Wilinski, J. Jamilkowski, and D. Kayran

'The low power testing has been discussed[1,2] in previous RSC meetings. The Department has requested a low power test under an exemption so that design issues can be understood and the final design determined before an ARR is conducted. The purpose of this meeting is to examine the devices being used to limit the beam current.

Status of the Gun, Laser, and Five Cell Cavity

The gun and the five cell cavity have undergone cold emission testing. The gun has achieve a maximum voltage of 2 MV and will not exceed this voltage during the low power testing. The five cell cavity has achieved 10 MV in CW and 18 MW in pulsed mode. The cavity will quench when operated in CW mode for periods of time exceeding about 10 minutes due to a thermal issue. It is expected that it will be operated in pulsed mode or for brief periods in CW mode followed by being off for a sufficient period of time to maintain thermal stability.

The laser presently installed is not the final laser system and cannot support the final design value of 500mA but can support operation of a 50 mA beam current. This provides nearly a factor of 10 reduction in potential escalation in beam current when compared to the final design goals.

Current Limiting Controls

A draft of the operating procedure, OPM 2.5.6 Rev. 2, for monitoring the beam current for the low power test is being finalized. The RSC was asked to examine the devices used to monitor and limit the beam current that are listed in section 5.1.1. Section 5.1 lists the following controls:

5.1 ERL Beam Energy and Beam Power Controls

The following limits are the maximum beam energy and beam power allowed for low-power testing. The ERL Operations Coordinator is responsible to comply with paragraphs 5.1.1 and 5.1.5.

5.1.1 The ERL Cathode Laser beam must have a locked, passive attenuator in the laser beam path and a laser duty factor control system to set the laser pulse energy and repetition rate, and an interlocking current measuring device.

5.1.2 Electron kinetic energy must be limited to 3.5 MeV for the superconducting RF gun (reference CASE section 2.1).

5.1.3 The electron beam power leaving the ERL superconducting gun or the 5-cell cavity must be limited to 70w averaged over 1-hour (reference CASE section 2.2).

5.1.4 Electron kinetic energy must be limited to 25MeV to the dump (reference CASE section 2.3).

5.1.5 The electron kinetic energy, the one-hour average beam power or beam current, and the kinetic energy to the dump must be monitored and logged in the ERL logbook at least daily during low power testing to ensure that the limits in 5.1.2, 5.1.3 and 5.1.4 are satisfied.

Requirement 5.1.2 and 5.1.4 are satisfied by the device design. Pickup sensors will measure the achieved voltages and they will be recorded to a computer database.

Requirement 5.1.5 will be monitored by the controls system and recored to the computer database. The operators will also record the average beam power into the ERL logbook.

Requirement 5.1.3 is achieved with the devices listed in section 5.1.1 and the potential response of the operator.

The three means listed in section 5.1.1 to limit the average beam power to less than 70 Watts are:

1. Passive laser attenuator
2. Laser power to the cathode via duty factor
3. Interlocking current devices

B. Sheehy provided a brief overview[3] of each of the system system that controls the power limit. A brief note was also provided[4] before the meeting.

Members were most comfortable with the passive attenuator in the laser optics, which is essentially a hardware failsafe device. The laser has an adjustable attenuator referred to as an internal attenuator. External to the laser is a manual external attenuator (half wave plate and a polarizer) that can be locked in position when the desired attenuation is achieved. The controls will then allow the internal attenuator to adjust the intensity up to

the 100% level established by the external attenuator. There are only two keys that have been released for the laser room. The ESH coordinator has one and B. Sheehy has the other. No other keys will be released for use during these tests. These two personnel will control access to the laser room and access to the passive attenuator. This was evaluated as sufficient controls to prevent inadvertent changes to the external attenuator.

The laser may not illuminate the cathode until after the attenuation has been measured by the power meter. The external attenuator will provide a minimum of a factor of ten in reduction of the laser light intensity. The beam current is limited to at most 5 milli-Amperes by the existing maximum laser power and the minimum attenuation of the external attenuator.

The following must be checked before beam operation **(ATS-ERL-Aug. 31, 2013-B. Sheehy & A. Etkin):**

1. **HWP and POL rated for the full laser energy density.**
2. **Procedure to measure the laser power with the power meter anytime the external attenuator is changed and before it excites the photocathode.**

The laser operates at 9.4 MHz. There is a laser pulse nearly every 100 ns. Each pulse would generate electrons from the cathode if allowed to be transmitted to the cathode. The number of electrons released is a product of the light intensity which is limited by the external attenuator and the Quantum Efficiency (QE) of the photocathode. An optical switch will be used to limit the number of contagious pulses that can be transmitted to the photocathode. In addition the optical switch can be opened many times a second. The number of openings (gate frequency) and the number of laser pulses allowed in each gate (width of the gate) will determine the number of pulses allowed to the cathode. The control system will determine the gate width and gate frequency based on a maximum of 70 Watts, or less to provide a safety margin.

The QE is measured before the photocathode is placed inside the gun. It will again be measured after it become operational. The controls program parameter will be adjusted for the possible change. Most effects cause a decrease in QE with time and contamination usually is the principal culprit.

Configuration management of the laser controls must be documented in a procedure and include the requirement that and change in parameters or software requires both authorization and verification that the setup is correct using the pickoff system prior to transmission to the photocathode. A scaler will be available in the control room to monitor the number of laser pulses allowed by the system. This will enable the operator to monitor the number of pulses. The controls software is a two-layered system. The upper level is a user interface allowing the operator to put inputs into the system. The software then checks that the input values are in the allowed ranges. The lower system provides the machine protection using a National Instruments RIO platform (a field programmable gate array- FPGA). The sections of code programmed specificly for checking the input parameters and for the download of the RIO platform must be checked by a second programmer to ensure the correct actions are provided by the system. **A**

procedure must be in place for the configuration management of the control system for the laser. (ATS-C Theisen&J. Jaminkowski-Aug. 31, 2013-ERL)

Two devices will be used to measure the electron beam current. The first is a Faraday Cup (FC) just after the first vertical bend. The initial setup requires that the vertical chicane be RS LOTOed off and the beam transmitted to the FC for measurement and radiation surveys. The electronics for the FC have been built in house. The second device to measure current is an Integrating Current Transformer (ICT) that is located just after the gun. This device will measure the beam current whether the chicane is on or off. The ICT and Faraday cup will be compared to the laser power and the QE for consistency. A factor of two of better is required. The Faraday cup and the ICT will be cross-checked for agreement.

The ICT can be fired to a maximum frequency of 10 kHz. The width of the integration time can range from 100ns to 9 micro-seconds. The transit times in the laser system and the gun are know and can be used to provide a good initial time offset for the ICT window. This also means that if the ICT is used for the current measuring then the gate width of the optical switch cannot be greater than 9 microseconds. The pickup between the laser and the external attenuator will be used to determine that the setup is correct. A procedure will establish that the ICT is properly setup for each running condition. **(ATS-ERL-Etkin& B. Sheehy-August 31, 2013)**

The ICT and the FC are not considered failsafe. The FC does have a bias voltage that eliminates some failure modes.

The ICT and the FC will provide an interlock through the Machine Protection System (MPS). The electronics provide an analogue signal that is used by the MPS to provide an interlock. The interlock will occur in less than a second. **A response procedure is required to provide the operators with the correct response to current interlocks and any required authorizations and limitations. (ATS-ERL-L. Hammons&D. Kayran-August 31, 2013)**

An engineering review must be conducted for the ICT and the FC. It should ensure that the device is monotonic for the possible beam currents and device settings. The review should include the procedures used to setup the cross check the devices. **(ATS-ERL-M. Wilinski& J. Sandberg-August 31, 2013)**

The layout of the existing chipmunks was discussed. Each chipmunk has cables about 30 feet long so they can be moved to optimum positions. It was suggested that the chipmunk at the east end of each labyrinth be moved closer to the beam to provide more sensitivity for potential beam faults. In addition, the two chipmunks that are not interlocking will be converted to interlocking (via daisy-chaining to existing interlocking chipmunks) and positioned to interlock if the beam strikes an object with the maximum allowed beam power. One will be positioned to be sensitive to beam faults near the vertical chicane at the gun energy. The other will be located between the five-cell cavity and the beam

dump. It will be sensitive to beam faults downstream of the cavity and potentially the amount of beam on the beam dump. This will provide a means of using the chipmunks to indirectly limit the current. Some adjustments in positions and potential shielding will be needed to make this scheme work. **The committee thought this extra protection was worthwhile for the low energy tests and recommends that the two chipmunks be moved and the other two be daisy-chained for interlocks and mover to appropriate locations to provide protection. (ATS-ERL-D. Beavis& R. Karol-August 31, 2013)**

Maximum External Dose Rate
(note added after the meeting)

It is worthwhile to examine the potential risk for external radiation if only the attenuator provides a minimum reduction in power of a factor of ten, which could result in a possible maximum beam current of 5 mA at 2MV. The dose estimates provided for the G5 test[5] can be used to obtain the dose rate estimates beam striking the beam stop outside four feet of light concrete. For 10 kW of 2 MeV electrons the dose rate is estimated to be .09 mrem/hr. If the shielding of the steel is removed then this would be approximately 20 mrem/hr. This would be the dose rate on the roof. In the isle-way on the side of the power supply house the dose rate would be 0.9 mrem/hr. Therefore, a failure of the system to control the laser pulses and to interlock on beam current from the gun will not result in occupied areas outside the shielding becoming a radiological area. The operators will have a scaler to monitor the laser pulse rate and stop any such fault in a short time. Coupled with the chipmunks located around the facility there is a very small risk that radiological levels could occur outside the facility enclosure for the gun operation.

Acceleration of the electron beam with the five-cell cavity greatly escalates the potential radiation outside the shielding. The increase in potential exposure rates is due to the higher beam power of up to 50 kW provided by the five cell cavity and the reduced effectiveness of the concrete shielding. The estimated external dose rate outside the roof for 50kW of 25 MeV electrons is 30 mrads/hr. In the isle-way on the floor the dose rate is 3 mrads/hr. If the shielding for the side of the dump is ignored to simulate an upstream fault these levels would increase by a factor of 25.

It was noted that if the exemption was approved that the RSC is expected to provide the verification process that was normally provided by an ARR.

References

1. http://www.c-ad.bnl.gov/esfd/RSC/Minutes/9_5.20_12_Minutes.pdf
2. http://www.c-ad.bnl.gov/esfd/RSC/Minutes/10_24_12Minutes.pdf
3. B. Sheehy, "Overview of Power Limitation Controls"
4. Laser Power Limitation to assure electron beam power limitation
5. D. Beavis,"G5 Beam Dump Simulation", Jan. 12, 2012; http://www.c-ad.bnl.gov/esfd/RSC/Memos/G5%20Beam%20Dump%20Simulation.pdf

CC:

RSC minutes file
RSC
D. Phillips
Attendees
H. Kahnhauser
T. Blydenburgh
D. Passarello

Prepared by: Wencan Xu

Date: April 13, 2014

Reviewed by: Dana Beavis

Date: 5/9/14

Approved by: Thomas Roser

T. Roser

Date: 5/12/14

ERL RSC Check-Off List for Low Power Beam Testing of the ERL SRF electron gun

Completion of this ERL RSC Check-Off List is a prerequisite for beam testing.

Upon completion of this check-off list in the MCR, the ERL cold emission testing (CET) of the SRF electron gun may commence.

1. _____ **(LP)** **RSC LOTO has been applied to prevent the 1 MW klystron from being energized. This or equivalent must remain in place until the check-off list is complete.**

2. _____ (LP) RSC LOTO has been applied to prevent excitation of five-cell cavity.

3. _____ (LP) C-AD OPM 2.5.6 must be followed for the low power test.

4. _____ (LP) Sweep procedure in place for the blockhouse and west area.

5. _____ (IG) Chipmunk operation verified.

6. _____ (IG) Chipmunk alarm and interlock levels checked against table below.

7. _____ (LE) ERL block house shielding and barriers inspected and acceptable low power beam operations

8. _____ (LE) ERL block house shielding prints approved.

9. _____ (LE) Barriers are in place at both ends of the trench and posted.

10. _____ (LE) The ladder at the power supply house has a locked barrier and is posted.

11. _____ (LE) Access panel on side of electronic room is locked closed.

12. _____ (RCD) Second floor access panel posted with "HP escort required when ERL is operating. Contact ERL control room at ext 3135 for operating status"

13. _____ (RCD) Post area between West wall of the ERL and building wall as "HP escort required when ERL is operating. Contact ERL control room at ext 3135 for operating status"

14.

15. _____ (ACG) Chipmunks required for CET have interlock function checked. (See attached list).

16. _____ (ACG) PASS test is complete for ERL.

17. _____ (ACG) State Tables approved for ERL beam operations.

18. _____ (ACG) PASS wiring prints approved.

19. _____ (ACG) PASS software under configuration management.

20. _____ (RCD) Entrance gates to Building 912 NEEBA as "Controlled Area, TLD required for entry.

21. _____ (RCD) East side support building, first and second floors posted "HP escort required when ERL is operating. Contact ERL control room at ext 3135 for operating status"

22. _____ (LE) Area surrounding ERL is posted as no ladders/no climbing.

23. _____ (LE) First dipole after gun is RS LOTOed off.

24. _____ (ACG) All bypasses or temporary jumpers in place have been discussed with RSCC.

25. _____(ACG) ODH interlocks certified.

26. _____ (RSCC) Chipmunk response reviewed for low power test.

27. _____ (RSCC) ERL shielding has been examined and found acceptable.

28. _____ (RSCC) Building roof requirements given to LE and RCD.

29. _____ (RSCC) Radiation survey precautions discussed with RCD.

30. _____(RSCC) Chipmunk response for low power tests acceptable.

31. _____(RSCC) Seam analysis and penetration updates provided to RSC for low power test.

32. _____(RCD) Building roof over ERL posted " No access to this area of roof when ERL is operating. Contact ERL control room at ext. 3135 for operating status".

33. _____(CEE) Conditions from review of Laser and ICT for beam intensity completed, as per review memo.

34. _____ (LP) Blockhouse and west fenced areas have been verified as swept.

35. _____(LP) Five-cell Cavity RS LOTOed off.

36. _____ (LP) A procedure provides operators instruction for responding to ICT interlocks.

37. _____(LP) Access procedure for locked west area to ensure any accesses do not leave the area unlocked without requiring a sweep of ERL.

38. _____(LP) LP will notify R. Karol or E. Lessard when beam operations begin.

39. _____ (LP) ERL ready for low power test.

40. _____ (OC) List completion verified by on-duty operations coordinator.

When the list above is complete then the ERL SRF electron gun may begin operations with beam.

The on-duty RCT needs to be in the area to conduct surveys of the shielding and penetrations. After the surveys have been reviewed, the configuration of the area posting near the ERL block house will be determined. A detailed survey will be conducted and documented after stable operations of the gun at 1W are achieved.

RCD	Radiological Control Division: P. Bergh or designee
LE	Liaison Engineer: D. Phillips or designee
LP	Liaison Physicist: D. Kayran or designee
MCRGL	MCR Group Leader: P. Ingrassia or designee
RSCC	Radiation Safety Committee Chairperson: D. Beavis or designee
OC	Operations Coordinator
ACG	Access Control Group: J. Reich or designee
RCT	Radiation Control Technician
IG	Instrumentation Group: M. Minty or designee
CEE	Chief Electrical Engineer: J. Sandberg or designee
RGDC	C-AD RGD Custodian: A. Etkin or designee

CHIPMUNKS			
Name	Location	Interlock [mrem/hr]	Alarm [mrem/hr]
NMO170	North Labyrinth	2.5	1
NMO171	North Gate	2.5	1
NMO172	1 MW Waveguide port	2.5	1
NMO173	50 kW Waveguide area	2.5	1
NMO174	West cryo pipe exit	2.5	1
NMO175	South Gate	2.5	1
NMO176	South Labyrinth	2.5	1
NMO177	Internal to ERL1	-	-
NMO178	Internal to ERL 2	-	-
NMO181	Gun power limit	20	10
NMO182	Power limit gun and dump	20	10

Collider-Accelerator Department

BROOKHAVEN NATIONAL LABORATORY

Building 911B – P.O. Box 5000
Upton, NY 11973-5000
Phone 631 344 7124
Fax 631 344 5568
beavis@bnl.gov
www.bnl.gov

managed by Brookhaven Science Associates
for the U.S. Department of Energy

Memo

Date: *May 27, 2014*

To: *RSC, D. Phillips and D. Kayran*

From: *D. Beavis*

Subject: *ERL Shielding Holes, Seams, and Penetrations for 3.5 MeV Beam*

Introduction

There have been several changes to the shielding since the original analysis was conducted. In addition, the analysis did not examine the potential dose that could escape through the shielding seams between the shield blocks. Several of the walls have single layers of shielding. Imperfections in the shielding blocks and the floor cause gaps to exist at many of these seams. In particular, the single layer roof has several gaps between roof beams exceeding 1cm in width. The focus of the presented analysis will be for 3.5 MeV electron beam to examine the shielding changes and imperfections.

The following are examined in this report:

1. Shielding seams transverse to the beam direction.
2. Shielding seams running in the direction of the beam.
3. The end-wall seam between the wall and the roof beam.
4. The change in the laser port.
5. The change in the cryo-piping ports.
6. Sensitivity to the beam loss location for selective examples.

Conclusions

It is concluded that the present shielding configuration is sufficient for low power beam and radiation surveys. Most results present are for 100 Watts of beam loss. The actual power of the beam for the low power is expected to be less than 10 Watts and radiation surveys will more likely be conducted at 1 Watt. The radiation surveys should provide some check on how well the seams are sealed around the side and end walls of the facility. The roof seams are an issue that needs additional consideration. This report will be updated or supplemented to include analysis for 25 MeV electron beam and the shielding surveys that will be conducted at low power tests.

It would be useful to have a better understanding of what limits the maximum sustainable power for beam loss. The lower power test may provide data on the limits that the present chipmunks can provide.

Simulation

The Monte Carlo code MCNPX 2.7c[1] was used to examine the dose from electrons striking material inside the ERL enclosure. In this report copper was used as the target material. The target was a rod of copper 10 cm long and with varying radius, but typically a 0.1 cm radius. In some simulations a 4cm diameter disk of copper was used. The thickness was usually 1cm. The relative location of the target to the seam or penetration can cause large changes in the potential dose that is calculated outside the shield. In most examples a location is chosen that is expected to create a nearly maximal dose outside the shield.

The electron and photon dose per electron is plotted in Figure I for 0.1 cm radius copper rod as a function of distance along the beam direction. For a thin target the electron dose from scattered electrons exceed the photon dose in the backward and sideward direction. If the target thickness is increased the photon dose has a small change but the electron dose decreased substantially. The doses per electron on target can be used to estimate the potential dose rates through shielding using Tenth-Value Layers (TVLs) or as the entrance dose challenging a penetration.

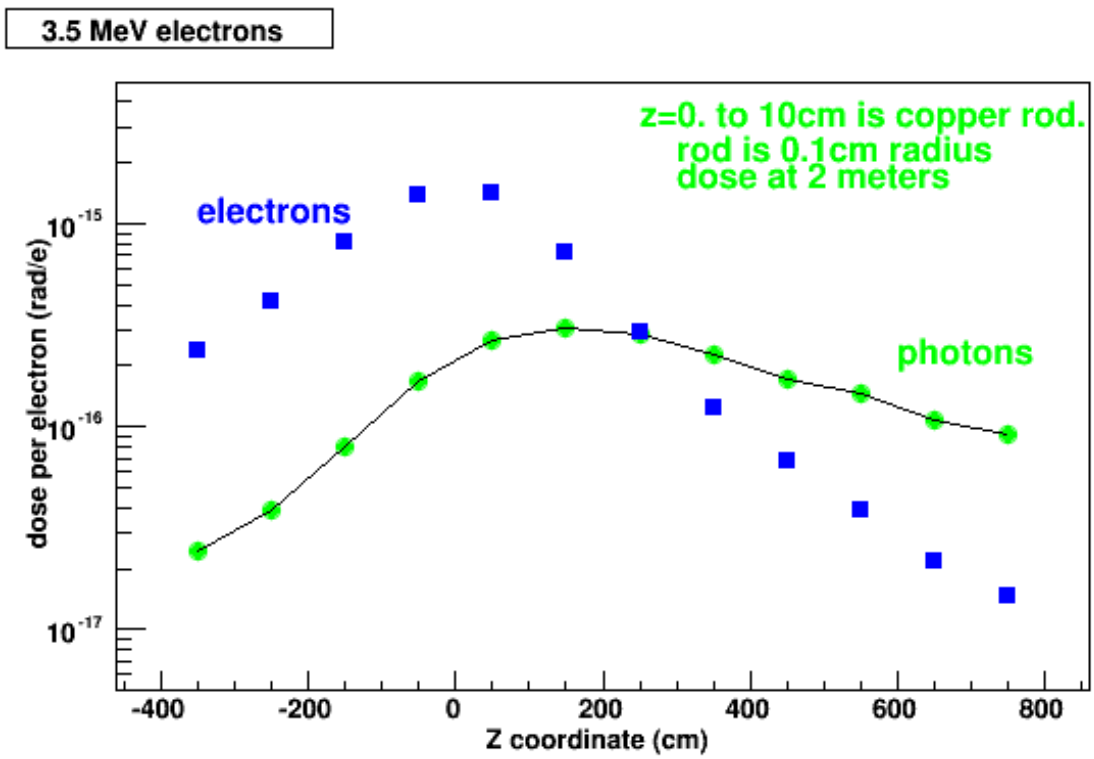

Figure I: The dose per electron 2 meters from a copper rod as a function of z. The dose is given for electrons and photons separately.

North End Wall Seam at 9 foot Elevation

The north end wall is designed with roof beams spanning over the top of the concrete walls forming the labyrinth. Initial inspection the seam over both walls revealed that the roof beam was almost an inch above the concrete sidewall and both seams over the two end walls are at essentially the same elevation.

[1] MCNPX version 2.7C was used for the analysis. D. PELOWITZ (ed.), "MCNPX User's Manual", Version 2.7.0, Los Alamos National Laboratory, LA-CP-11-00438 (2011).

A flange of 1cm thick copper was used to approximate the electron beam striking an object. The flange was located at the end of the five-cell cavity with a distance to the first wall of the labyrinth of 540 cm. The geometry is shown in Figure 2. The concrete roof before the labyrinth is included in the simulation. The concrete roof ends half way over the second end wall forming a ledge. Water pipes are run along this ledge as well as cable tray supports.

A 3.5 MeV electron beam was directed at the center of the flange. At the edge of the concrete end wall the photon dose per electron is $3.2*10^{-20}$ rads/e. 100 Watts of beam corresponds to $6.44*10^{17}$ e/hr. The dose rate for the beam striking the flange is 21 mrads/hr. The dose rate is sensitive to the flange thickness. If the flange is changed to a thickness of 0.1 cm then the dose rate for photons increases to 110 mrads/hr. The dose from electrons can be ten times higher for thin objects if there is no material to absorb the electrons that are scattered. The calculations were repeated for the flange located at a position that simulates the Faraday cup that will be used in the first beam test location. In this case the flange is 1200 cm from the first labyrinth wall. The dose rates are a factor of two smaller than the results for the flange downstream of the five-cell cavity. A layer of Pb has been placed along the outer crack on the ledge to reduce the dose rates.

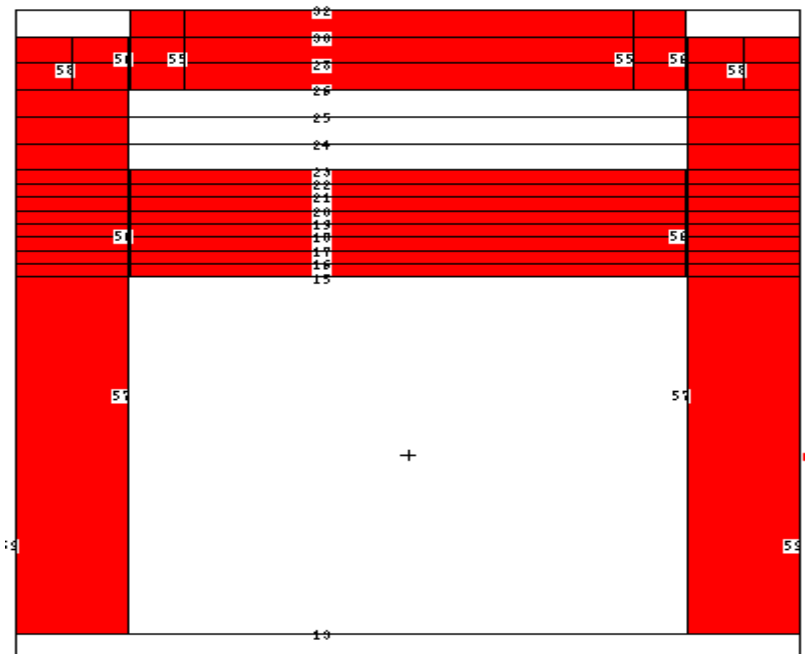

Figure II: The simple model of the two concrete walls and the walkway between them. The 2.54 cm seam is between surfaces 56 and 57. The dose was scored at surfaces and with point detectors.

The effectiveness of the Pb can be estimated using published TVLs. The Pb bricks placed along the seam will be 5 cm high and 10 cm thick. Using a TVL of 3.5 cm provides an attenuation[2] of $1.5*10^{-3}$ for 10cm of Pb. The Pb will completely remove the electrons that are scattered from thin targets. For 100 Watts of 3.5 MeV beam the dose rate at the side wall is reduced to 0.1 mrem/hr. The estimated attenuation is expected to be conservative. A source of uniform photon fluence with fixed-energy was used as a second

[2] See NCRP report No. 144, Figure 4.1.

method to estimate the attenuation of a Pb brick on top of concrete. The results are presented in Table I. The results are in good agreement with the use of TVLs.

Table I: Photon Dose Attenuation for 10 cm of Pb

Photon Energy (MeV)	Attentuation
3.0	$1.7*10^{-3}$
2.0	10^{-3}
1.0	$1.3*10^{-4}$
0.5	$2.2*10^{-5}$
0.2	$4*10^{-6}$

The same geometry was used to estimate the dose rate for 100 Watts of 25 MeV electons striking a 1cm thick disc of copper 540 cm from the labyrinth wall. The photon dose rate was calculated to be 270 mrads/hr after the concrete wall. Including the electron dose rate increases the dose rate to 640 mrads/hr. The scattered electrons do not contribute as much to the total dose at the higher energy. The dose averaged photon energy is approximately 3 MeV so one would expect a dose rate of 0.35 mrads/hr with 10 cm of Pb after the seam. The calculation was repeated for a 1mm thick disc. The dose rate is substantially lower since the electrons to not lose a substantial portion of their energy in the target.

During the recent installation of the beam dump the roof beams over the inner wall were lowered to decrease the height of the seam over the first wall. It is expected that this change will substantially reduce the dose rate for beam losses.

Roof and Wall seams Transverse to the Beam

There are a series of seams that are transverse to the direction of the beam. The side walls have relatively narrow gaps in the vertical seams and are typically spaced about every 10 feet. The roof has seams every two feet and some of the gaps are larger than 1 cm. Since several of the roof gaps are large it is worthwhile to examine them first even though the concrete shielding roof is excluded of personnel. The building roof is estimated to be 6 meters above the shielding and will be roped off and excluded of personnel[3] pending results from the initial radiation surveys.

The simulations are conducted using rotational symmetry about the z-axis[4]. The electron beam strikes a 0.1cm radius copper rod that extends from z=-5cm to z=5cm. The roof seam gap starts at z=0 and extends to z=gap size. The simple model[5] used to estimate the dose is shown in Figure III. The dose for photons and electrons was estimated 30 cm above the seam and then 6 meters above the seam which corresponds to the approximate roof location. This analysis was conducted for the copper rod for seams of several different gap sizes. For 100 Watts of 3.5 MeV electrons the photon and electron dose rates are given in Table II.

[3] RCD personnel will enter the building roof over ERL to conduct radiation surveys to document the risk. The RCTs may enter with C-AD experts that assist them in the surveys.
[4] The use of rotation symmetry reduces the computation time substantially. It will overestimate the dose for a flat surface such as the roof as the measurement point moves away from the beamline.
[5] A photo of a large roof seam is shown in Picture I.

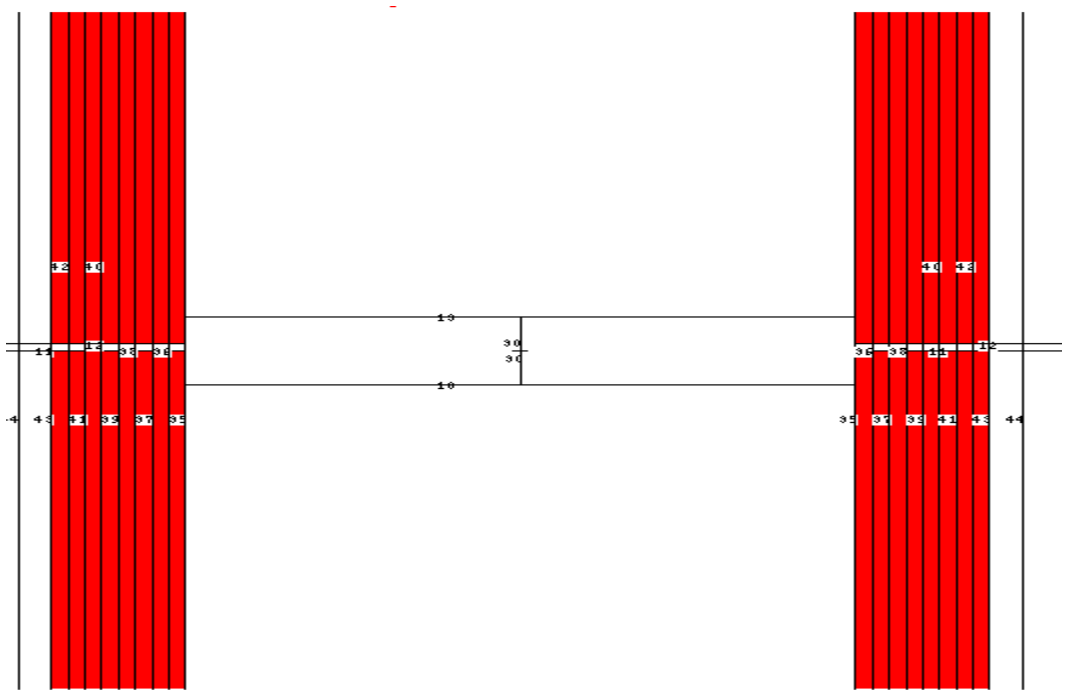

Figure III: Model of the 1cm gap between roof beams. The seam is located at z=0. to 0.5 cm. The target rod is 0.1 cm in diameter and is located from z=-5cm to 5 cm.

Table II: Dose Rate for 100 Watts of 3.5 MeV Electrons Striking a Thin Copper Rod

Seam gap (cm)	location	particle	Dose rate (mrads/hr)
2.0	1 foot above seam	photon	**80**
2.0	1 foot above seam	electron	6600
2.0	At building roof	photon	1.6
2.0	At building roof	electron	230
1.0	1 foot above seam	photon	**36**
1.0	1 foot above seam	electron	1800
1.0	At building roof	photon	1
1.0	At building roof	electron	120
0.5	1 foot above seam	photon	**7**
0.5	1 foot above seam	electron	900
0.5	At building roof	photon	0.4
0.5	At building roof	electron	60
0.2	1 foot above seam	photon	**0.4**
0.2	1 foot above seam	electron	270
0.2	At building roof	photon	0.4[6]
0.2	At building roof	electron	20

[6] This data point most likely is an anomaly, but the cause has not been resolved.

Most of the seams are less than 0.5 cm and even with the scrapping location almost directly underneath the gap should not be an issue (7 mrads/hr). The photon dose rates on the building roof are not much of a concern for 100 Watt beam losses at most locations. Even for a 2 cm seam gap the photon dose rates are less than 2 mrads/hr on the building roof. However, there are circumstances where the dose rate on the building roof could be unacceptable. This will be discussed later in this section.

The dose rate from electrons appears to be a potential concern. However, it only requires about 2 g/cm^2 of material for absorb most of these electrons. The 10 meters of air provides 1.2 g/cm^2 and the building roof material probably provides sufficient material to eliminate most of the electron dose on the building roof. The beam pipe is typically 0.15 cm thick stainless steel or in some locations is constructed of thicker AL vacuum boxes. There are loss locations where the scattered electrons do not transverse much material to escape the beam transport system. For locations outside the shielding that are closer than the building roof the electron dose may be more relevant.

The center of the 10cm copper rod is more than 3 radiation lengths from the initial beginning of the rod. 3.5 MeV electrons have a range of 0.27 cm in copper. Therefore, the highest electron and photon dose rates outside the seam may be caused when the front of the rod is closer to the gap. Figure IV displays the sensitivity of the dose results as a function of where the target front surface is relative to the roof seam. The dose from electrons is not shown but is approximately a factor of ten higher. The dose out a seam has a narrow band in target locations where the photons and electrons stream directly out of the enclosure and the dose is dominated by $1/r^2$. Once the target is shifted and a reflection is required for radiation to propagate through the crack the dose drops several orders of magnitude. The building roof dose is then dramatically different from the dose exiting the shield since the scattering point is near the entrance of the crack.

Figure I can be used to estimate the dose when adjusted for $1/r^2$. The dose rates for 100 Watts of 3.5 MeV electrons are:

Table III: Dose Rate Through A 1cm Roof Seam At 1 Foot Above The Seam

Particle	Dose rate from Figure 1 (rads/hr)	Dose rate from calculations (rads/hr)
Photon	40	11
Electron	180	80

There is reasonable agreement between the simple technique and the more detailed calculations.

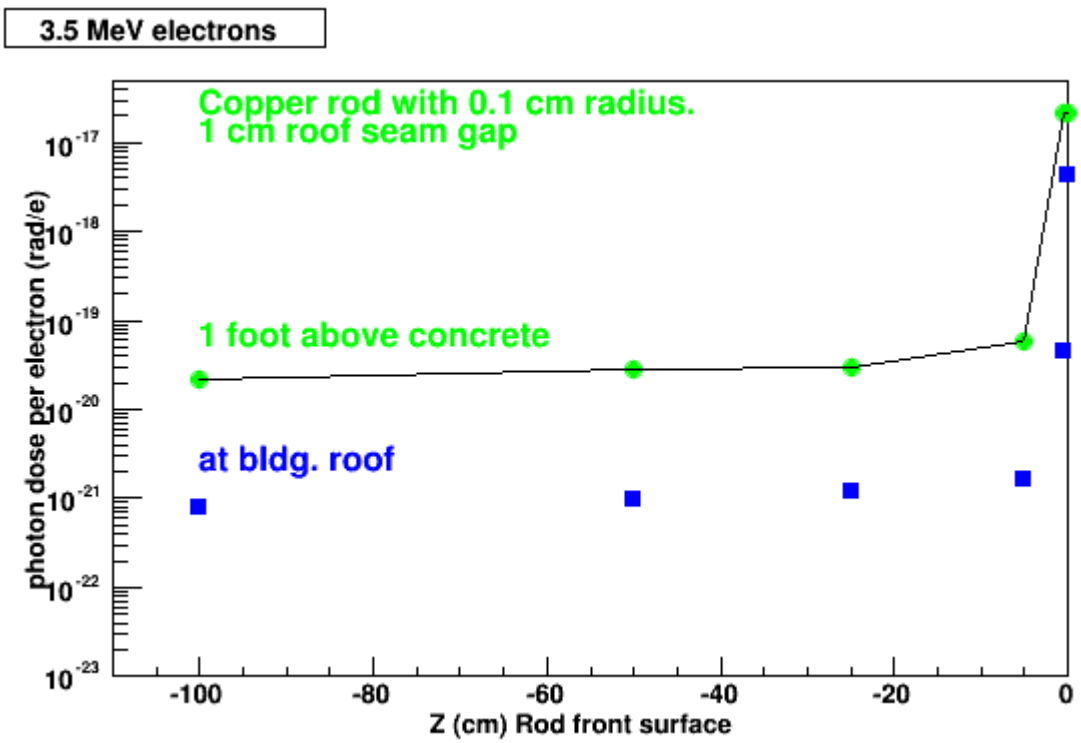

Figure IV: Photon dose from a rod as a function of the location of the rod front surface to the roof crack. The green circles are at 1 foot above the seam. The blue squares are on the building roof.

The distance used for the beam line to the roof is approximately the same as the distance from the gun beam to the east side wall. One can use the numbers without modification for vertical seams on the east-side wall. The east-side wall typically had small vertical seams. Recently an effort was made to reduce all side wall gaps to less than 2mm by placing steel plates into the seam providing 15 cm to 30 cm of steel. The seams were visually inspected and most are now much smaller than 0.2 cm. The photon dose through a 0.2 cm seam the dose rate is expected[7] to be 0.4 mrads/hr or less unless the front surface of the target is directly across from the seam. The front of the target was aligned with the start of the seam to estimate the photon dose outside of a 0.2 cm gap was calculated. The 100 Watts of 3.5 MeV electron beam produced a photon dose rate of 13,000 mrads/hr one foot outside the shielding gap. This could create unacceptable radiation levels if possible.

The west-side wall is more than twice the distance from the low energy beam line. Thus the dose rate challenging the gaps should be 4 times lower. Some of the seams were large and have been filled with steel plates. A barrier keeps personnel away from this wall for a distance of more than six feet. The increase in distance will help to reduce the potential dose for sources that are not directly in line with the vertical seams.

[7] The results from Table II have been used.

The vertical side wall seams have apparent dose rates that can be daunting for sources aligned directly across from a vertical seam. However, there are only five vertical seams along the low energy transport for each of the east and west side walls. Table IV provides comments for the five seams on each of side walls. The numbering starts with one and for the vertical seam at the upstream end of the gun.

Table IV: Comments on Vertical Side Wall Seams

Vertical Seam number	East Wall	West wall
1	Upstream of gun beam	Upstream of gun beam
2	Blocked by 2 foot heavy concrete	Clocked by Large heavy concrete block
3	Has line of sight for low energy but not first beam test	Has line of sight for low energy but not first beam test
4	Covered by second layer of concrete	Covered by steel block but overlap small
5	Adjacent to dump shielding	Blocked by steel

The vertical seams are satisfactory for the first beam test. The seams in which additional analysis or examination are highlighted in red. The third vertical seam is an issue for beam into the transport section upstream of the five-cell cavity.

The issue is to assure that no beam losses will not occur directly across from a transverse seam or to reduce the dose that can propagate through the gap.

Horizontal Seams

The horizontal seams between shielding blocks should have similar behavior as the transverse seams. The main difference is the horizontal seams have been positioned so they are at a different elevation than the beam. Therefore, the direct illumination through the seam by particles produced in the target is avoided. The copper rod was simulated with geometry that approximates to the east wall. The seam is 56 cm above the beam height and the inside surface of the concrete is 260 cm. The statistics were rather poor[8] but consistent with $3*10^{-19}$ rads/e of photon dose for a 0.2 cm gap. The result is in good agreement[9] with Figure IV for the roof gaps. Secondary sources can illuminate the sidewall seams with photons that can go directly through the seams. The requirement for scattering should make these potential sources 100 times lower in illuminating the seam but there is less attenuation. These secondary sources can add to the total dose.

The horizontal side wall gaps have been decreased in size with steel plate and many are much smaller than 0.2 cm.

[8] The results used were after 15 hours of CPU.
[9] A factor of 90 is used based on Table II to adjust for the difference in seam gap sizes used between the side wall calculation and Figure IV.

Laser Port

The laser port was originally a rectangular port with dimensions 3 by 4 inches. The port was shadowed by the shielding[10] for the one megawatt waveguide. It became desirable to have the laser port in another location so a 3 inch diameter hole was bored through the shielding at a location approximately transverse to the first beam halo scrapers. The dose rate out the original laser port was estimated assuming that the port was shadowed by approximately two feet of heavy concrete. The new laser port is not shadowed for beam losses in the upstream transport. The dose rates out the laser port have been estimated using MCNPX in two stages. The first calculation provided the energy distribution and dose for electrons and photons. These distributions were binned in energy and then used as a source input in MCNPX. The source directed photons and electrons onto the area of the port based for the existing geometry. The simple model[11] of the shield wall with the Al spacer and the 1 inch lead shield is shown in Figure IV.

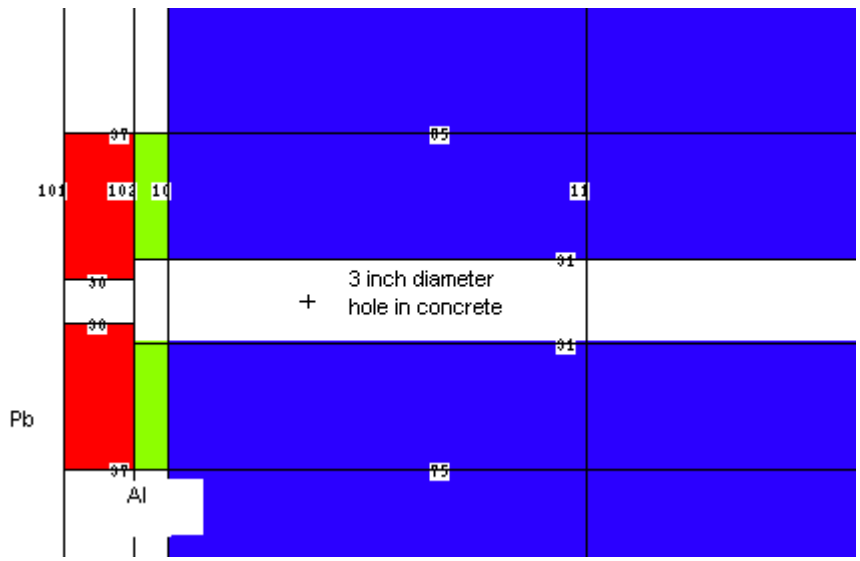

Figure IV: Pb shielding covering the entrance of the laser port inside the ERL shielding. The Al spacer does not shield the bored hole. The one inch diameter laser pipe is not shown.

The calculation used the 0.1 cm diameter rod on the beam line 255 cm away from east side wall and 137 cm above the port. For 100 Watts of 3.5 MeV electrons the dose immediately outside the port is 14 mrads/hr. At a distance of one foot from the wall the dose rate is 10 mrads/hr. Beam faults with beam power of 1000 Watts are not expected to be sustainable although this assertion has not been proven. If necessary additional shielding can be placed inside the ERL enclosure if the laser pipe valve is moved. The old laser port has some critical length cables being routed to equipment and cannot be completely plugged. The Faraday cup for the first beam test has two feet of heavy concrete between it and the new laser port. The first halo scrapper has no shielding between it and the new laser port and will be used for a fault study if possible. The halo scrappers will be locked in the open position until the machine is ready to conduct fault studies on the scrapper.

[10] http://www.c-ad.bnl.gov/esfd/RSC/Memos/ERL-Penetrations3.pdf
[11] A photo of the shield and laser tube is shown in Pic1 at the end of this report.

Cryo-pipe Penetrations

The cryogenics piping penetrates the shielding at an elevation of 13 feet. Square ports with sides 12 inches where placed in the shielding for the piping. There are four such ports on the west wall. The area beneath the ports will be swept and access controlled. Access requirements may change after radiation surveys are conducted for the shielding seams[12] and cryo-piping. An example of the geometry[13] used in the MCNPX analysis is shown in Figure V. The correct pipe wall thickness is used but it is assumed that the pipes are empty.

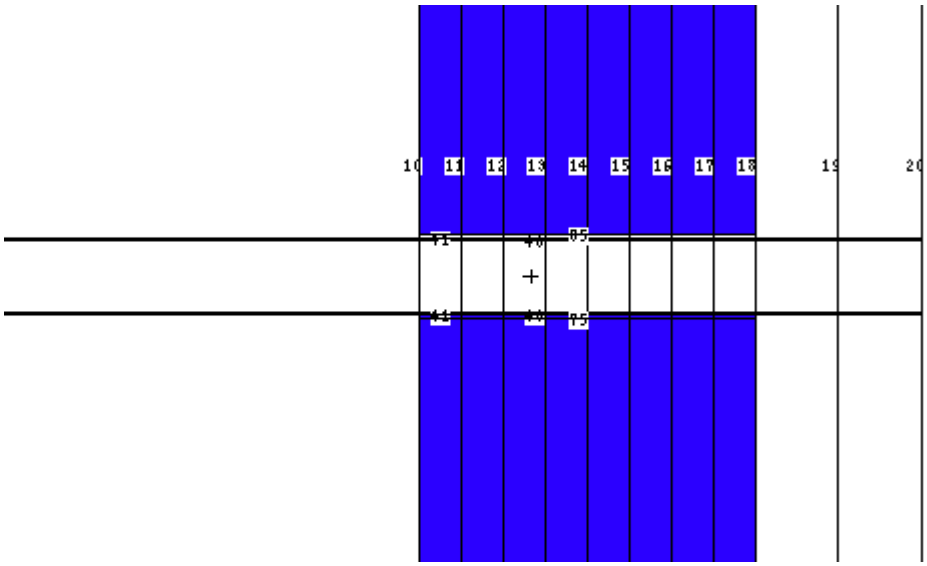

Figure V: Cross-sectional view of the round cryogenics pipe in the square hole for the west shielding. The pipe extends well into the enclosure but in the model is terminated two feet from the exterior of the shield wall.

The geometry was established for beam losses in the gun beam line. The distance from the beam line to the shielding wall is 6.1 meters. The beam line is 2.85 meters below the laser port center. The roof was not placed in most of the model calculations[14]. Electron and photon fluences were tallied on surface through the shield wall and outside. Of particular interest are the doses in the adjacent building which is the closest the personnel can approach with the barrier that has been placed between the west shielding wall the building skin.

---

[12] The access restriction was placed due to the large gaps in some of the shielding seams. Steel has been placed into these gaps to reduce the potential radiation.

[13] A photo of the cryo-ports closest to the gun taken on the outside of the shielding is shown in Picture III. A photo from the inside showing the two cryo-ports near the five-cell cavity on the inside of the shielding is shown in Picture V.

[14] The roof was included in several simulations. Without the cryo-piping it could increase the dose rates for photons by a factor of two. When pipes were added into the same model the dose with a roof was almost identical to the dose without a roof.

The photon dose rates as a function of radius from the pipe axis is shown in Figure VI. The dose rates are given at 930 cm from the beam line, which is the position of the building wall. The two stage technique discussed for the laser port was also used for the cryo pipes. The structure in the electron dose is caused by the cryo pipe absorbing the scattered electrons but some outer areas of the port the electrons are not shielded by the pipe. The dose rate fo a 100 Watt loss in the lower energy beam line is less than 10 mrads/hr. An interlocking chipmunk is located approximately 60 cm from the vent pipe and 90 cm from the vacuum jacketed cryo pipe. The interlock threshold is 2.5 mrads/hr which would like the peak dose out either of these ports to less than 25 mrads/hr. This chipmunk is not effective[15] in limiting the dose out the upstream cryo-pipe ports for beam losses some early sections of the low energy transport.

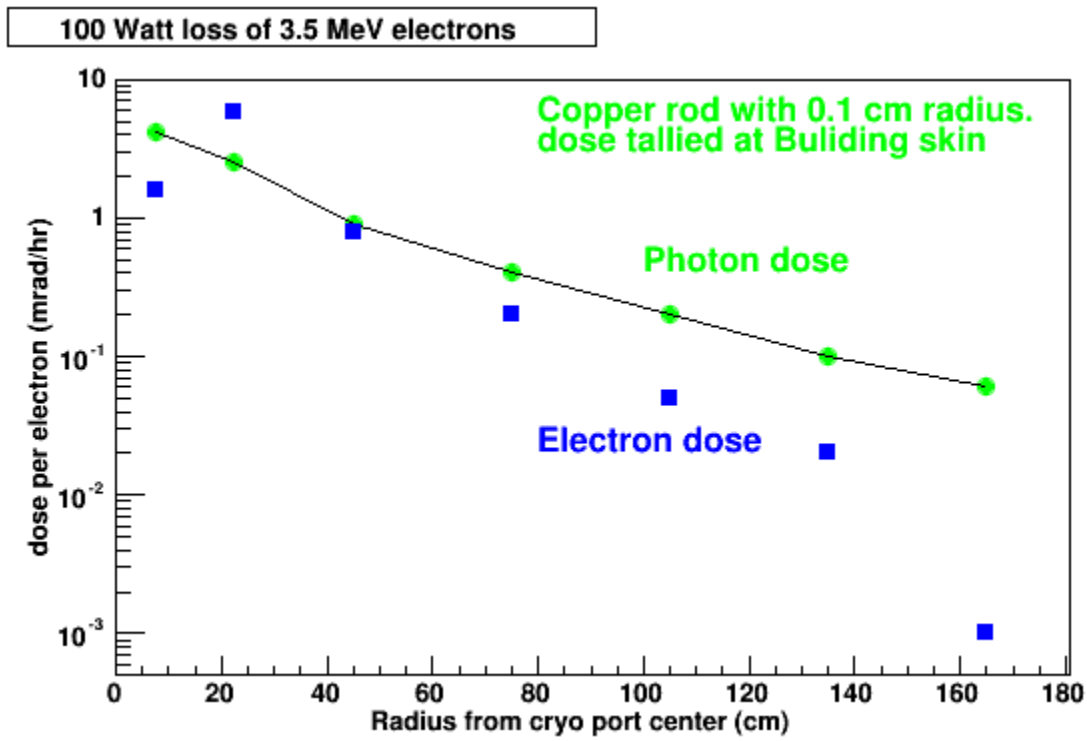

Figure VI: The dose rate as a function of radius from the cryo-port. Dose using surface dose averaged over annulus. The average radial position was used for the position.

Cc:

I. Ben-Zvi
W. Xu

[15] The large shielding block at the south end of the ERL ring shadows the chipmunk from some loss locations in the upstream gun transport.

Photos of Areas of Interest

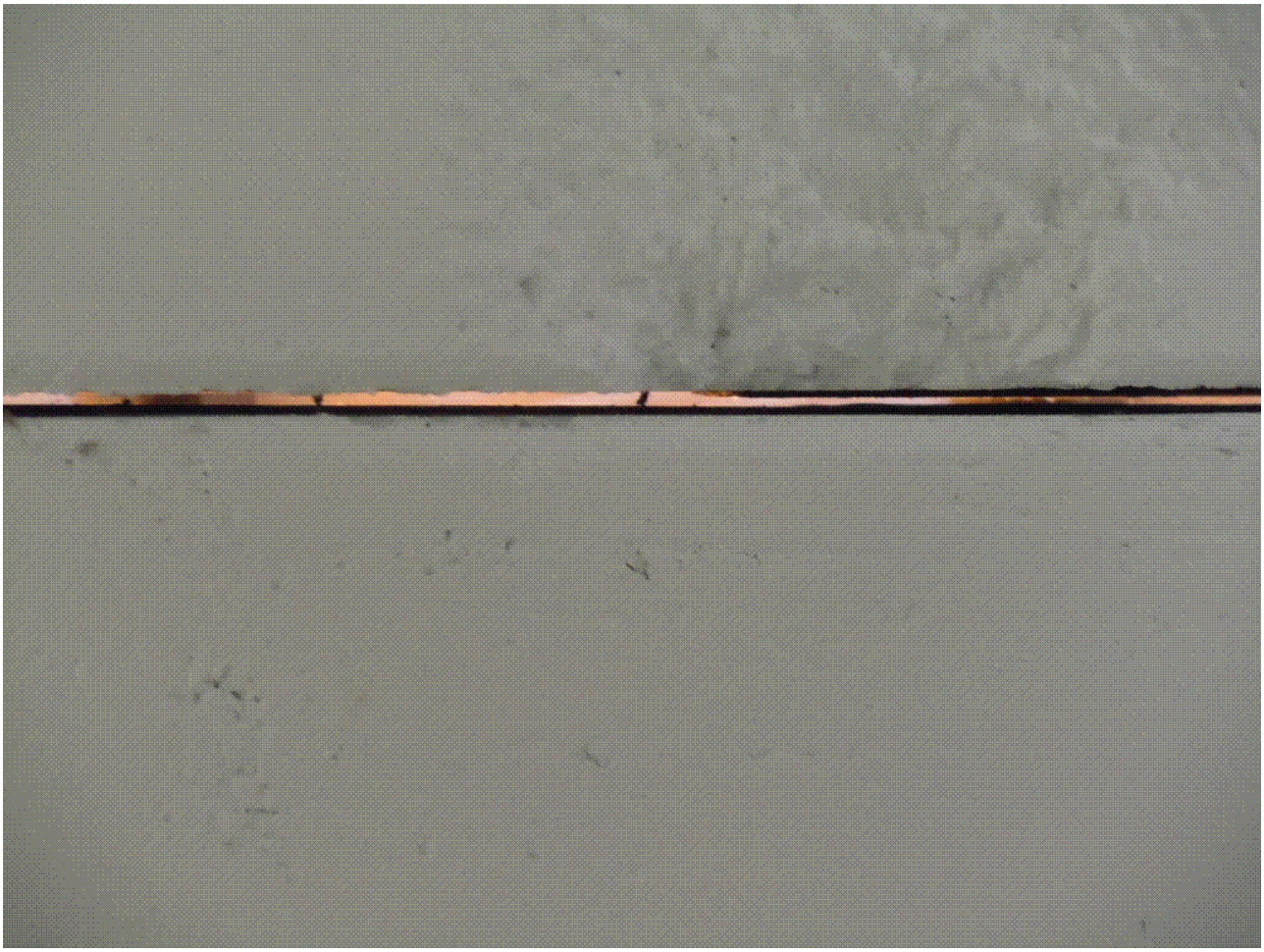

Picture I: Examine of a gap (~1cm) between to roof beams. The photon is taken from inside the enclosure look up through the seam gap.

Picture II: Photon of the new laser port with the Al spacer, Pb shield and the stainless steel pipe for the laser beam.

Picture III: West side barrier with cryo-pipes exiting the shielding at an elevation of 13 feet above the floor.

Picture IV: The inside of the cryogenics pipes near the fiver cell-cavity.

Picture V: Shows one of the joints on the west wall. The steel plate can be seen in both the horizontal and vertical seams.

Prepared By:
Wencan Xu
Date: April 16, 2014
Reviewed by: Raykowl
Date: 14/16/14
Approved by: Thomas Roser
T. Roser
Date: 4/16/14

ERL RSC Check-Off List for Cold Emission Testing of the ERL 5-cell Cavity and SRF gun

Completion of this ERL RSC Check-Off List is a prerequisite for cold emission testing of 5-cell cavity, SRF gun, and Fundamental Power Coupler (FPC) Conditioning.

Upon Completion of this check-off list and the completion of the ASSRC check-off list in the MCR the ERL cold emission testing may commence.

1. _____(LP) **RSC LOTO has been applied to prevent the 50 kW and 1 MW klystron power supply from being energized. This or the equivalent must remain in place till the check-off list is complete.**

2. _____(ACIG) Chipmunk operation verified.

3. _____(RSCC) The shielding has been examined and found acceptable for the cold emission test.

4. _____(LE) ERL Block house shielding and barriers inspected and acceptable for CET and FPC conditioning operations.

5. _____(LE) The barriers are in place at both ends of the trench and posted.

6. _____(LE) The ladder at the power supply house has a locked barrier and is posted.

7. _____(RCD) Post area between West wall of the ERL and building wall as CONTROLLED AREA, TLD required.

8. _____(ACG) Chipmunks required for cold emission testing have interlock function checked. (See attached list).

9. _____(ACG) PASS tests complete for ERL.

10. _____(LE) Waveguide is in place for 1MW system through penetration in second story of "condo"; the short plate on the end of waveguide is still in place, or the waveguide is connected to the SRF gun.

11. _____(LE) Waveguide for 5-cell cavity is terminated with short plate, or connected to the 5-cell cavity.

12. _____(RCD) Entrance gates to the ERL block house posted.

13. _____(RCD) Areas around the entrance gates roped off and posted CONTROLLED AREA, TLD required.

14. _____(RCD) The support building against ERL shielding is posted as no entry without an RCT during the cavity tests.

15. _____(RCD) On the east side of ERL, the alley way between the ERL Control Room and the ERL support building must be posted .

16. _____(RCD) The door to the Klystron posted.

17. _____(LE) Area surrounding ERL posted as no ladders/no climbing.

18. _____(ACG) All bypasses or temporary jumpers in place have been discussed with the RSCC.

19. _____(ACG) ODH interlocks certified.

20. _____(LP) The items listed above have been completed.

21. _____(OC) List completion verified by on-duty operations coordinator.

When the list above is complete then cold emission testing of the ERL 5-cell cavity may begin.

When the cavity is ready to potentially generate x-rays the on-duty RCT needs to be in the area to conduct surveys of the shielding and penetrations. After the surveys have been reviewed the configuration of the area postings near the blockhouse will be determined.

RCD: Radiation Controlled Division: P. Bergh or designee. Ext:5992
LE: Liaison Engineer: D. Phillips or designee. Ext. 4671
LP: Liaison Physicist: Sergey Belomestnykh or designee. Ext: 8448
MCRGL: MCR Group Leader: Peter Ingrassia or designee. Ext. 4272
RSCC: Radiation Safety Committee Chairperson: D. Beavis or designee Ext: 7124
OC: Operations Coordinator Ext. 8061(Wencan Xu)
ACG: Access Control Group: J. Reich or designee. Ext: 5335
RCT: Radiation Control Technician
ACIG: Accelerator Components & Instrumentation Group: Tony Curcio (4659)/Joe Citro or designate.
CEE: Chief Electrical Engineer: J. Sandberg or designee. Ext: 4682
RGDC: CA RGD custodian: A. Etkin or designee. Ext: 4006

ERLGL: ERL Group Leader Ilan (5143) or Dmitry (5136)

CHIPMUNKS

Name	Location	Interlock [mrem/hr]	Alarm (mrem/hr)
NMO170	North Labyrinth	50	40
NMO171	North Gate	50	40
NMO172	1 MW Waveguide port	50	40
NMO173	50 KW waveguide area	50	40
NMO174	West cryo pipe exit	50	40
NMO175	South Gate	50	40
NMO176	South Labyrinth	50	40
NMO177	Internal to ERL 1	-	-
NMO178	Internal for ERL 2	-	-

C-AD

Radiation

Safety Minutes of RSC Subcommittee of October 27, 2014

Committee

Issued: October 29, 2014

Subject: BLIP Penetration Shielding and ERL Shielding Changes

Present: : D. Beavis, D. Raparia, L. Mausner, C. Theisen D. Kayran, E. T. Lessard, C. Taylor, C. Montag, L. Evers, S. Pontieri, M. Fedurin, and D. Phillips

The meeting was called to review the shielding design for penetrations from the BLIP beam transport to the control room and improvements to the shielding for the ERL enclosure.

BLIP Penetrations

The beam transport system is being modified for the installation of the beam raster system. This system will allow for higher beam intensities on the BLIP targets by painting the beam on the target which will create a more uniform exposure. The existing penetrations have been plugged with steel. The plan is to remove the plugs and use the penetrations for cables for magnets and instrumentation.

The design of the shielding[1] that would replace the plugs has six inches of steel and six inches of poly over the 10 inch diameter penetration. The potential dose rate one foot above the shield is expected to be 40 mrem/hr if 100% of the beam was lost near the penetration and the machine was operating at the ASE limit $5.5*10^{18}$ protons per hour. Footnote1notes that the ASE limit is a factor of two higher than the machine can operate and that other active controls and monitoring are expected to keep beam losses substantially lower than the maximum possible beam current and for any substantial duration. The dose in a beam fault is therefore expected to be far lower than 40 mrem.

The shield could have been placed below the floor level but it was decided that to provide for maximum possible use of the penetration area for cables that the shield would be placed above the concrete floor. The poly provides a high density of hydrogen atoms which are effective is reducing the neutron dose. About 80% of the dose above the shield is from neutrons with energies above 20 MeV. This suggests that if the shield is changed that more steel should be added. It was noted that the present calculation uses poly and not borated poly. It borated poly

[1] D. Beavis, "BLIP Penetrations from the BLIP Spur to the Control Room, Oct. 24, 2014; http://www.c-ad.bnl.gov/esfd/RSC/Memos/10_24_14_BLIP.pdf

can be obtained easily and in time for the shield completion than it will help reduce the low energy neutron dose.

The shield design was recommended for approval with the following recommendations:

- **Place a monitor TLD over the shield to monitor the dose. (CK-BLIP-Dec. 1, 2014-925)**
- **The Linac LP will conduct a beam fault study at 0.1% of beam. (CK-BLIP-Dec. 1, 2014-926**
- **The LE will ensure that configuration control of the shield will follow the requirements of OPM 9.1.12. (CK-BLIP-Dec. 1, 2014-927)**

ERL Shielding Improvements

Shielding changes were made to the ERL enclosure to reduce the potential exposure due to beam faults aligned with shield block seams and the chronic dose from the beam dump out the shielding roof. Seven distinct changes to the shielding were made and the potential dose during beam faults was provided in a memorandum[2].

Some steel bars that cover the roof seams are bridged across from adjacent steel bars. This leaves a gap between the roof seam and the steel shielding. This method was chosen in some cases to reduce the labor in preparing the shielding. It is noted that the dose in short events appears to be large. However, it is very unlikely that these vents can last for any fraction of a second at full beam power.

There is no access to the building roof over ERL if ERL is operating. The building roof posting will be reviewed and discussed with RCD to see if it is appropriate.

It was noted that a few of the calculations for ERL will be checked to provide independent analysis.

The only recommendation made was for one or two monitor TLDs be place on the building roof. (CK-ERL-Dec. 1, 2014-927)

CC:

RSC minutes file
RSC
Attendees
S. Smith
I. Ben-Zvi
P. Bergh

[2] D. Beavis, "ERL Shielding Changes",Oct. 24, 2014; http://www.c-ad.bnl.gov/esfd/RSC/Memos/10_24_14_ERL.pdf

Prepared by: Wencan Xu

Date: Oct. 29, 2014

Reviewed by: Dana Beavis

Date: 10/29/14

Approved by: Thomas Roser

T. Roser

Date: 10/30/14

ERL RSC Check-Off List for Low Power Beam Testing of the ERL SRF electron gun

Completion of this ERL RSC Check-Off List is a prerequisite for beam testing.

Upon completion of this check-off list in the MCR, the ERL cold emission testing (CET) of the SRF electron gun may commence.

1. _____ **(LP)** **RSC LOTO has been applied to prevent the 1 MW klystron from being energized. This or equivalent must remain in place until the check-off list is complete.**

2. _____ **(LP)** **RSC LOTO has been applied to prevent excitation of the gun cathode by the laser.**

3. _____ **(LE)** **First dipole after gun is RS LOTOed off. This must remain LOTOed off until fault studies are complete and reviewed for the straight section.**

4. _____ **(IG)** **Slits after gun in first beam transport sections are RS LOTOed fully open.**

5. _____ (LP) C-AD OPM 2.5.6 must be followed for the low power test.

6. _____ (IG) Chipmunk operation verified.

7. _____ (IG) Chipmunk alarm and interlock levels checked against table below.

8. _____ (LE) ERL block house shielding and barriers inspected and acceptable low power beam operations

9. DB (RSCC) ERL shielding improvements reviewed and inspected.

10. _____ (LE) Barriers are in place at both ends of the trench and posted.

11. _____ (LE) The ladder at the power supply house has a locked barrier and is posted.

12. _____ (LE) Access panel on side of electronic room is locked closed.

13. _____ (RCD) Access panel posted.

14. _____ (RCD) Post area between West wall of the ERL and building wall as access prohibited without an RCT.

15. _____ (ACG) Chipmunks have interlock function checked. (See attached list).

16. _____ (RCD) Entrance gates to the ERL block house posted.

17. _____ (RCD) Areas around the entrance gates roped off and posted not to enter without HP for the beam tests.

18. DB (RSCC) The support building against ERL shielding is satisfactory for access without an RCT escort.

19. _____ (LE) Area surrounding ERL is posted as no ladders/no climbing.

20. _____ (ACG) All bypasses or temporary jumpers in place have been discussed with RSCC.

21. _____(ACG) ODH interlocks certified.

22. DB (RSCC) ERL shielding has been examined and found acceptable.

23. DB (RSCC) Building roof requirements given to LE and RCD.

24. DB (RSCC) Radiation survey precautions and details given to RCD.

25. _____(RCD) Building roof posted as needed.

26. _____ (RCD) Post area between West wall of the ERL and building wall as access prohibited without a RCT.

27. _____(CEE) Conditions from review of Laser and ICT for beam intensity completed, as per review memo.

28. _____ (LP) Blockhouse and west fenced areas have been verified as swept.

29. _____ (LP) A procedure provides operators instruction for responding to ICT interlocks.

30. _____(LP) Work Control Coordinator (WCC) will be informed of the operations of the ERL gun with beam so that OPM 4.99 and 4.99a can be followed.

31. _____ (LP) ERL ready for low power test.

32. _____ (OC) List completion verified by on-duty operations coordinator.

When the list above is complete then the RS LOTO of the laser and Klystron can be removed so that low power beam testing can begin to the first Faraday cup.

When the SRF gun is ready to potentially generate beam, the on-duty RCT needs to be in the area to conduct surveys of the shielding and penetrations.

RCD	Radiological Control Division: P. Bergh or designee
LE	Liaison Engineer: D. Phillips or designee
LP	Liaison Physicist: D. Kayran or designee
MCRGL	MCR Group Leader: P. Ingrassia or designee
RSCC	Radiation Safety Committee Chairperson: D. Beavis or designee
OC	Operations Coordinator
ACG	Access Control Group: J. Reich or designee
RCT	Radiation Control Technician
IG	Instrumentation Group: M. Minty or designee
CEE	Chief Electrical Engineer: J. Sandberg or designee
RGDC	C-AD RGD Custodian: A. Etkin or designee
WCC	Work Control Coordinator :F. Kobasiuk or designee

CHIPMUNKS			
Name	Location	Interlock [mrem/hr]	Alarm [mrem/hr]
NMO170	North Labyrinth	2.5	1
NMO171	North Gate	2.5	1
NMO172	1 MW Waveguide port	2.5	1
NMO173	50 kW Waveguide area	2.5	1
NMO174	West cryo pipe exit	2.5	1
NMO175	South Gate	2.5	1
NMO176	South Labyrinth	2.5	1
NMO177	Internal to ERL1	-	-
NMO178	Internal to ERL 2	-	-
NMO181	Gun power limit	20	10
NMO182	Power limit gun and dump	20	10

Prepared by: Wencan Xu

Date: April 20, 2015

Reviewed by: _____

Date: 4/23/15

Approved by: _____

T. Roser

Date: 4/23/15

ERL RSC Check-Off List for Commissioning Gun to Dump (GtD)

Completion of this ERL RSC Check-Off List is a prerequisite for beam testing.

Upon completion of this check-off list in the MCR, the ERL may begin commissioning beam from the gun to the beam dump following the approved commissioning sequence (OPM 18.5.8).

1. _____ **(LP)** **RSC LOTO has been applied to prevent the 1 MW klystron from being energized. This or equivalent must remain in place until the check-off list is complete.**

2. _____ (LP) RSC LOTO has been applied to prevent excitation of five-cell cavity.

3. _____ (LP) Sweep procedure in place for the blockhouse and west area.

4. _____ (IG) Chipmunk operation verified.

5. _____ (IG) Chipmunk alarm and interlock levels checked against table below.

6. _____(IG) Slits downstream of the gun have been verified as fully open.

7. _____ (LE) ERL block house shielding and barriers inspected and acceptable low power beam operations

8. _____ (LE) Barriers are in place at both ends of the trench and posted.

9. _____ (LE) The ladder at the power supply house has a locked barrier and is posted.

10. _____ (LE) Access panel on side of electronic room is locked closed.

11. _____ (RCD) Second floor access panel posted with "HP escort required when ERL is operating. Contact ERL control room at ext 3135 for operating status"

12. _____ (RCD) Post area between West wall of the ERL and building wall as "HP escort required when ERL is operating. Contact ERL control room at ext 3135 for operating status"

13. _____ (ACG) Chipmunks required for GtD have interlock functions checked. (See attached list).

14. _____ (ACG) PASS test is complete for ERL.

15. _____ (RCD) Entrance gates to Building 912 NEEBA as "Controlled Area, TLD required for entry.

16. _____ (LE) Area surrounding ERL is posted as no ladders/no climbing.

17. _____ (LE) Second dipole after gun is RS LOTOed off.

18. _____(LE) Shadow shielding (Pb bricks) have been labeled.

19. _____ (ACG) All bypasses or temporary jumpers in place have been discussed with RSCC.

20. _____(ACG) ODH interlocks certified.

21. _____ (RSCC) ERL shielding has been examined and found acceptable.

22. _____(RCD) Building roof over ERL posted " No access to this area of roof when ERL is operating. Contact ERL control room at ext. 3135 for operating status".

23. _____ (LP) Blockhouse and west fenced areas have been verified as swept.

24. _____ (LP) ERL ready for Gun to Dump (GtD)

25. _____ (OC) List completion verified by on-duty operations coordinator.

When the list above is complete then the ERL SRF electron gun may begin commissioning with beam as per the commissioning sequence.

The on-duty RCT needs to be in the area to conduct surveys of the shielding and penetrations. After the surveys have been reviewed, the configuration of the area posting near the ERL block house will be determined. A detailed survey will be conducted and documented after stable operation of the gun at 1-10W is achieved to the Faraday cup.

RCD	Radiological Control Division: P. Bergh or designee
LE	Liaison Engineer: D. Phillips or designee
LP	Liaison Physicist: D. Kayran or designee

MCRGL	MCR Group Leader: P. Ingrassia or designee
RSCC	Radiation Safety Committee Chairperson: D. Beavis or designee
OC	Operations Coordinator
ACG	Access Control Group: J. Reich or designee
RCT	Radiation Control Technician
IG	Instrumentation Group: M. Minty or designee
CEE	Chief Electrical Engineer: J. Sandberg or designee
RGDC	C-AD RGD Custodian: A. Etkin or designee

CHIPMUNKS			
Name	Location	Interlock [mrem/hr]	Alarm [mrem/hr]
NMO170	North Labyrinth	20	10
NMO171	North Gate	2.5	1
NMO172	1 MW Waveguide port	2.5	1
NMO173	50 kW Waveguide area	2.5	1
NMO174	West cryo pipe exit	2.5	1
NMO175	South Gate	2.5	1
NMO176	South Labyrinth	50	20
NMO177	Internal to ERL1	-	-
NMO178	Internal to ERL 2	-	-
NMO181	Gun power limit	20	10
NMO182	Power limit gun and dump	20	10

Collider-Accelerator Department

BROOKHAVEN NATIONAL LABORATORY

Building 911B – P.O. Box 5000
Upton, NY 11973-5000
Phone 631 344 7124
Fax 631 344 5568
beavis@bnl.gov
www.bnl.gov

managed by Brookhaven Science Associates
for the U.S. Department of Energy

Memo

Date: *May 11, 2015*

To: *C. Schaefer (ERL IRR* Team Leader), RSC, D. Kayran, and I. Ben-Zvi*

From: *D. Beavis* DB

Subject: *IRR Pre-start Finding 7.3.4*

Introduction

The IRR prestart finding 7.3.4 " Complete the ARR Gun-to-Dump Post-Start Action 2: " To assure availability of the shielding calculations to others for continuity of operations, the preparation of a comprehensive shielding assessment for ERL should be prepared and made readily available."

The ERL is an R&D facility with several of the present components expected to be used elsewhere within two years. Each time the configuration is changed in the future the person examining the changes should examine the QA1 shielding prints and QA1 Interlock State Tables. Then with appropriate field inspection a qualified person should be able to design the changes without reference to the notes written in the past. Therefore, I find this request somewhat out-of–place for this R&D facility. Naturally, having the previous methods and calculations to evaluate the shielding may make evaluation of the changes more efficient.

I believe that the ARR Team was unaware of some of the documents that are easily available online inside the BNL firewall. It was unfortunate more of these documents were not transferred to the special website that was created for the ARR Team. However, a better method would be to give them access to the BNL sites and avoid transferring documents to multiple websites.

I will provide a brief history of the evolution of the ERL radiation protection design and then follow it with a road map to most of the design documents for radiation protection.

*Instrument Readiness Review Committee (**IRR**)

ERL Shielding and Operational History

ERL shielding construction started in early May 2004. The C-AD shielding physicist was working with the Liaison Engineer to design the shielding for the facility construction. The initial construction was allowed to begin without an RSC review, as the RSC Chair was confident the shielding physicist should be able to support the design without initial review. The RSC reviewed the initial design[1] on May 27, 2004. The review determined that the forward Bremsstrahlung dose had not been considered in the design. Additionally, a myriad of other issues had not been addressed such as penetrations, full beam faults, and neutrons. There was no plan in place on how to address the integrated design of the shielding. The side walls had been constructed and the initial design is shown in Figure I. The shielding physicist was encouraged to work with the project to develop in-close shielding to provide adequate protection.

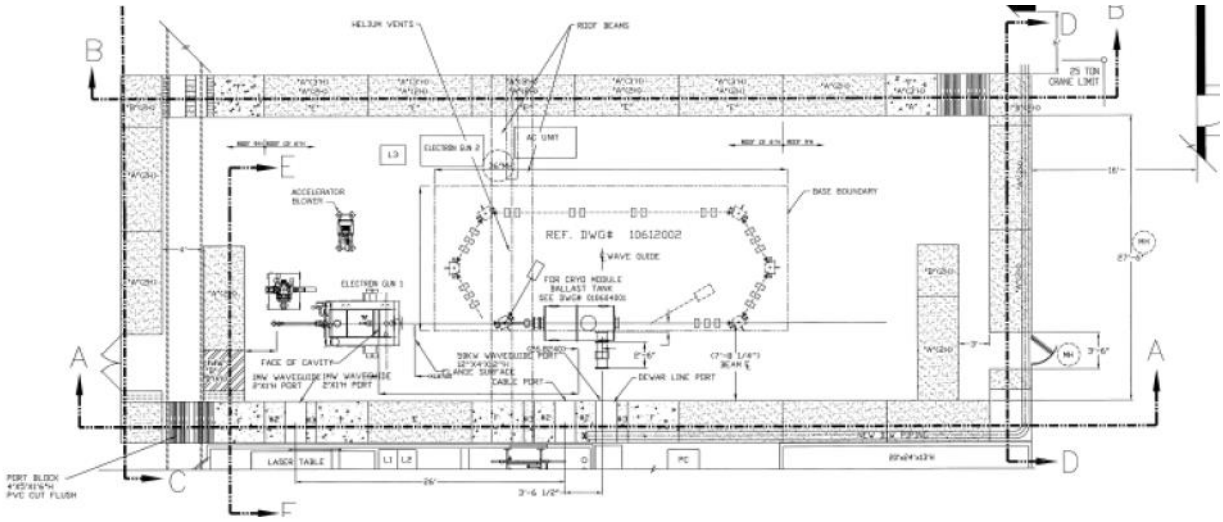

Figure I: ERL shielding design at time of first RSC review.

[1] See http://www.c-ad.bnl.gov/esfd/RSC/Minutes/05-27-04%20minutes.pdf

*Instrument Readiness Review Committee (**IRR**)

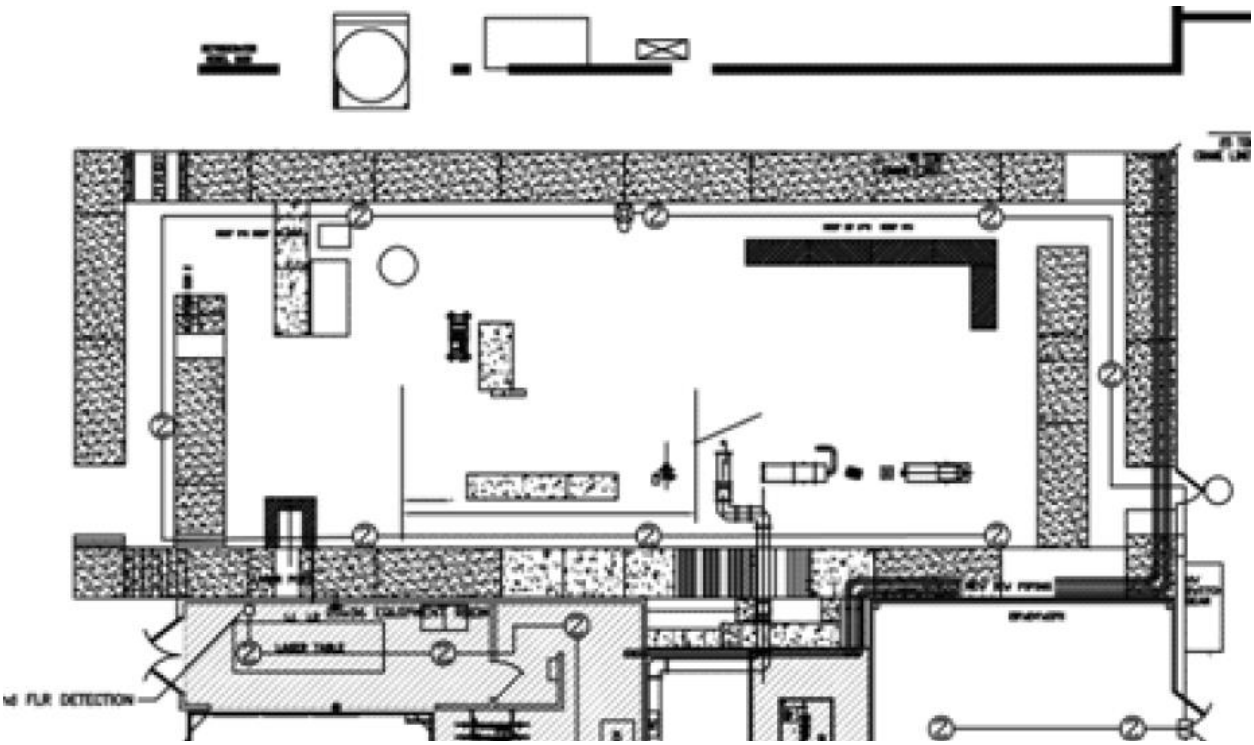

Figure II: ERL shielding after changes in late 2006 and early 2007.

It became apparent in mid to late 2006 that there were difficulties in developing the ERL shielding design in a systematic manner. In August of 2006 the first of several memorandums were written to support changes in the bulk shielding design and address penetrations. Some of these changes are reflected in Figure II and were reviewed by the RSC[2] on Jan. 18. 2007. By this time exterior support buildings had been added and the shielding plan needed to accommodate their existence. Some minor changes to water pipes and cable tray were conducted and additional shielding was added where possible. By early 2008 most of the shielding issues for ERL had been addressed. Since that time most of the documents reflect comparing as built to design and more detailed treatment of specific issues and running modes.

A series or Radiation Generating Device (RGD) tests have been conducted at ERL. The first was testing the Klystron in 2008 followed by a series of five-cell cavity testing beginning in April 2009. Since April 2009 there have been at least ten operational tests of the five cell cavity. Beginning in March 2011 a series of tests on the gun have been conducted as an RGD with means in place to prevent electron beam. April 2014 was the first attempt for low power beam from the gun. Low power beam was successfully produced from the gun on Nov. 18, 2014 with approximately 0.5 Watts of 1.3 MeV beam to the first Faraday cup. Two fault studies were

[2] RSC Minutes; http://www.c-ad.bnl.gov/esfd/RSC/Minutes/01_18_07%20Minutes.pdf

*Instrument Readiness Review Committee (**IRR**)

conducted and a third attempted but not run as the cathode failed. The next test with gun beam is expected after the May ARR and the first loop tests sometime in July 2015.

During RGD testing and beam tests Radiological Control Technicians have been dispatched to conduct radiation surveys. No radiation has been detected[3] outside the shielding enclosure.

Documentation Roadmap for ERL

The Prototype Energy Recovery Linac, Building 912 Safety Assessment Document (SAD) is dated June 30, 2008[4]. This document is a summary of the shielding and radiation protection design of ERL. After this date the primary changes have been examining the as built to the design, calculating specific penetrations in more detail, addressing specific operational modes, and addressing the issue of the seams in the shielding. Since 2008 the overall scheme has remained the same, which is to reduce the largest sustainable faults to less than 15,000 mrem/hr outside the shielding and to satisfy the C-AD shielding policy. It is expected that the Machine Protection System (MPS) will provide additional defense in depth. The routine dose rate outside the shielding is trivial.

The main basis for the bulk shielding design was reviewed by the RSC in August 2006[5] and (see Footnote 2) January 2007. These minutes address a simple TVL treatment of the bulk shielding for beam faults using the combination of four-foot thick light concrete shielding walls coupled with additional shielding that reduces the dose rate for 50 kW of zero degree 25 MeV beam losses to less than 15,000 mrem/hr outside the external bulk shield. A plan view of the final shielding with the beam dump and outline of the machine is shown in Figure III.

[3] Radiation was detected only once during a five-cell test with incomplete shielding for the 1 MW waveguide.
[4] ERL Archival SAD; http://www.c-ad.bnl.gov/ESSHQ/SND/ERL/ERL%20SAD%20June%202008.pdf
[5] RSC Minutes and references therein; http://www.c-ad.bnl.gov/esfd/RSC/Minutes/08_10_06%20Minutes.pdf

*Instrument Readiness Review Committee (**IRR**)

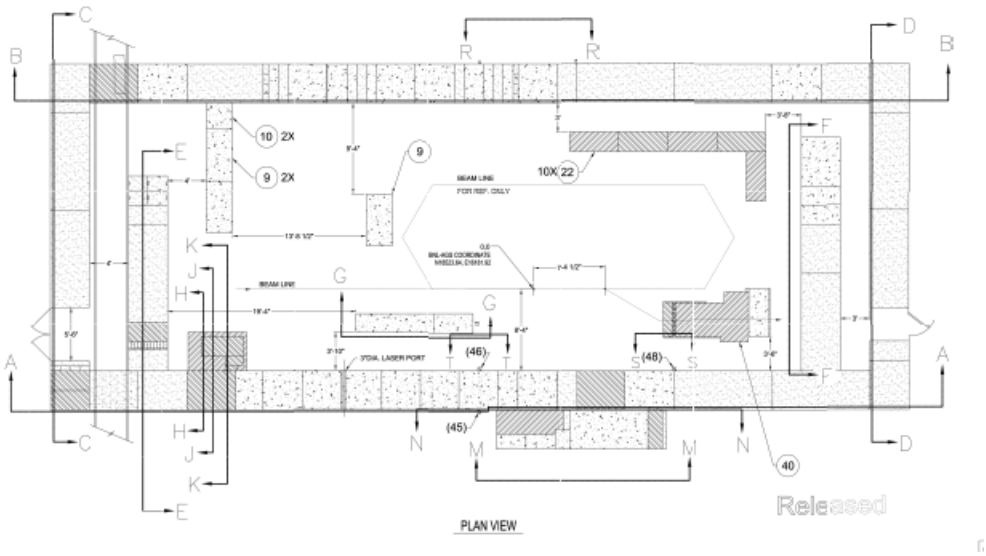

Figure III: Plan view of the approved shielding.

Other documents that address ERL bulk shielding are:

G5 Beam Dump Simulation http://www.c-ad.bnl.gov/esfd/RSC/Memos/G5%20Beam%20Dump%20Simulation.pdf

Dose outside the ERL room *http://www.c-ad.bnl.gov/esfd/RSC/Memos/kin_dump.pdf*

ERL Beam Dump Review *http://www.c-ad.bnl.gov/esfd/RSC/Memos/erl_dump_review.pdf*

Radiation due to 3.5 MeV electron beam *http://www.c-ad.bnl.gov/esfd/RSC/Memos/Kin_Radiation_MeV_10_1_12.pdf*

ERL Roof Transition *http://www.c-ad.bnl.gov/esfd/RSC/Memos/ERL_1_13_14.pdf*

The documents that address penetrations and updates include:

Dose Rate Estimates for ERL Penetrations: http://www.c-ad.bnl.gov/esfd/RSC/Memos/ERL-Penetrations3.pdf

An Updated Table for the ERL penetrations can be found at: http://www.c-ad.bnl.gov/esfd/RSC/Memos/5_13_15_ERL.pdf

*Instrument Readiness Review Committee (**IRR**)

Estimate of the Radiation Exiting Penetrations for the ERL 50 KW Wave Guide, Cable Buss Block, and Water Pipes: http://www.c-ad.bnl.gov/esfd/RSC/Memos/holes_1_040912.pdf

Both were used in the SAD. Updates include:

ERL Shielding Holes, Seams, and Penetrations for 3.5 MeV Beam:
http://www.c-ad.bnl.gov/esfd/RSC/Memos/ERL_Holes_5_27_14.pdf

Dose Calculations for ERL Seams using FLUKA:
http://www.cad.bnl.gov/esfd/RSC/Memos/07_08_14_Memo%20on%20ERL%20Seams%20rev1.pdf

ERL Roof Shims: http://www.c-ad.bnl.gov/esfd/RSC/Memos/ERL_6_19_14.pdf

Documents that cover miscellaneous items including bulk shielding, penetrations, etc.

Hydrogen Generation in ERL Beam Dump Water:
http://www.c-ad.bnl.gov/esfd/RSC/Memos/kin_dump_water.pdf

Examination of Miscellaneous Shielding Changes at ERL:
http://www.c-ad.bnl.gov/esfd/RSC/Memos/ERL_7_14_14.pdf

ERL Chipmunk Locations: http://www.c-ad.bnl.gov/esfd/RSC/Memos/ERL_7_15_14.pdf

ERL Dipole Power supplies: http://www.c-ad.bnl.gov/esfd/RSC/Memos/ERL_7_23_14.pdf

ERL Shielding Changes: http://www.c-ad.bnl.gov/esfd/RSC/Memos/10_24_14_ERL.pdf

Comparison of MCNPX with ERL Fault Study 232:
http://www.c-ad.bnl.gov/esfd/RSC/Memos/12_18_14_ERLFaultStudy.pdf

ERL Beam Fault Studies and Maximum Beam Power:
http://www.c-ad.bnl.gov/esfd/RSC/Memos/5_11_15_ERL.pdf

*Instrument Readiness Review Committee (**IRR**)

IRR shielding Findings: *http://www.c-ad.bnl.gov/esfd/RSC/Memos/4_22_15_IRR.pdf*

A set of documents and minutes for all RSC activities can be found on the website: http://www.bnl.gov/cad/esfd/ where there are subheadings for Radiation Safety.

*Instrument Readiness Review Committee (**IRR**)

Collider-Accelerator Department

BROOKHAVEN NATIONAL LABORATORY

Building 911B – P.O. Box 5000
Upton, NY 11973-5000
Phone 631 344 7124
Fax 631 344 5568
beavis@bnl.gov
www.bnl.gov

managed by Brookhaven Science Associates
for the U.S. Department of Energy

Memo

Date: *May 13, 2015*

To: *RSC, D. Kayran & I. Ben-Zvi*

From: *D. Beavis*

Subject: *Update on ERL Table of Dose Rates out Penetrations for MCIs*

The following Table has been generated from Table XI of the March 28, 2008 memorandum on ERL penetrations[1]. The Table was updated to include examination of the as built facility and more detailed calculation of some faults. The MCIs are conducted at a beam loss rate of 1 MW for 3.5 MeV electrons and 50 kW for 25 MeV electrons. The areas of the table that have been yellow filled are either changed or are calculations of weak areas such as seams in the shielding that were not included in the original analysis. Although some of the numbers are large and it is expected that multiple radiation monitors will detect such beam faults and turn the beam off in three seconds or less.

It has always been the philosophy that the ERL MCIs would be examined at low beam current to understand whether changes to the shielding or distribution of radiation detectors are necessary for ALARA purposes. In addition, it has been suggested in the past that the beam losses used for the MCIs are excessively high. There is now technical information[2] that may aid in reducing the beam loss rate used in the MCI analysis.

Maximum Penetration Dose Rates[3]

penetration	**Max. Gamma Dose rate (mrem/hr)**	
New Laser port	100,000	3.5 MeV beam [9]
1 MW Waveguide	25,000	Adjacent wall and not port
Cryo Ports (4)	8,400 [1]	2000 [1][10]
Cryo Ports (4)	40,000 10,000	3.5 MeV 25 MeV [14]
North Gate	260	1800
North Labyrinth Buss Block	4,000 [2]	100
South Gate	49,000 [3]	160

[1] See http://www.c-ad.bnl.gov/esfd/RSC/Memos/ERL-Penetrations3.pdf
[2] See http://www.c-ad.bnl.gov/esfd/RSC/Memos/5_11_15_ERL.pdf
[3] If the energy is not specified it is 25 MeV.

Port in South Labyrinth (2)	60,000 [4][11]	600 [5]
West Trench	6,000	100 [5]
East Trench	2,000	1,600 [5]
South labyrinth buss block	100	300 [5]
ODH Vent	10,000 [6]	4,000 [6]
ODH Vent side shielding	100,000	3.5 MeV @ 1 MW
Lifting Fixture holes (4)	1,400 [7]	8 [7]
50 kW waveguide	28,000 [8]	1,000 [8]
Roof seam with steel—on building roof	25,000 12,800	For 3.5 MeV @1MW For 25 MeV @50kW
West shim seam	200	For 3.5 or 25 MeV [12],[13]
East shim seam	80,000 17,000	For 3.5 @1 MW For 25 MeV @ 50 kW[13]
North end seam	1000 175	For 3.5 MeV@1 MW For 25 MeV @ 50kW

Comments:

[1] Assumes that steel has been used to reduce the gamma rays by a factor of 10.
[2] This is directly outside the buss block. This may be in a fenced area.
[3] A shield block in the ring center would substantially reduce this number, if desired.
[4] At port exit which may be in a fenced area. Port may be packed in the future. This value is for the port with the highest dose rate of the two ports.
[5] Not presented in text.
[6] This is on the roof and is not allowed to have personnel.
[7] Evaluated at the edge of the shielding and not on the roof.
[8] The penetrations for the cables ports, water pipes and the 50 kW waveguide are presented in another note (see reference 10). The dose rates presented here are at a height of 12 feet above the floor.
[9] The dose rate from the 25 MeV beam bouncing off the floor from the south arc has been crudely calculated to be less. This is for 1 MW of 3.5 MeV electrons.
[10] Number of ports has changed from five to four.
[11] This was the penetration of two that was considered the worst. It is now filled with concrete so a lower number is expected.
[12] Takes credit for the two foot light concrete cap blocks that were added.
[13] Does not take credit for the steel shim which will reduce the number more.
[14] MCNPX was used for the as built configuration. The 25 MeV result is for the beam line 6 m from the wall, which provides a shallower angle for penetrating the opening.

Collider-Accelerator Department

BROOKHAVEN NATIONAL LABORATORY

Building 911B – P.O. Box 5000
Upton, NY 11973-5000
Phone 631 344 7124
Fax 631 344 5568
beavis@bnl.gov
www.bnl.gov

managed by Brookhaven Science Associates
for the U.S. Department of Energy

Memo

Date: *May 13, 2015*

To: *C. Schaefer (ERL IRR* Team Leader), RSC, D. Kayran, and I. Ben-Zvi*

From: *D. Beavis (RSC Chair)*

Subject: *Review of Shielding Policy for ERL (ATS #8310.1.2)*

This memorandum reviews the design documentation for ERL for radiation exposure and concludes that the design satisfies the C-AD's shielding policy. However, there have not been sufficient beam operations to verify that the design actually satisfies the C-AD shielding policy. This is achieved when fault studies and routine operations are conducted and compared to design estimates.

It is recommended that the IRR pre-start 2.3.2 be changed to: Review and document that the initial ERL shielding, posting, and radiation monitors have been designed to satisfy the C-AD shielding policy. **This memorandum is intended to close this modified version of IRR finding 2.3.2.**

It is recommended that a post-start finding be added-2.4.1: Review the beam operations and beam fault studies to verify that the radiological design of ERL satisfies the C-AD shielding policy.

The C-AD uses radiation shielding to reduce radiation levels in occupied areas to acceptable levels. The C-AD shielding policy is described in formal terms in Chapter 4 of the current C-AD SAD, and in OPM 9.5.1 C-A ALARA Policy and Responsibilities. The relevant policy statements are summarized as follows:

1. Annual site-boundary dose equivalent is less than 5 mrem.
2. Annual on-site dose equivalent to inadvertently exposed people in non-Collider-Accelerator Department facilities is less than 25 mrem.
3. Maximum dose equivalent to any area where access is not controlled is limited to less than 20 mrem during a fault condition.
4. For continuously occupied locations, the dose equivalent rate is ALARA but in no case greater than 0.5 mrem in one hour or 20 mrem in one week.
5. Dose equivalent rates where occupancy is not continuous is ALARA, but in no case exceeds 1 rem in one year for whole body radiation, or 3 rem in one year for the lens of the eye, or 10 rem in one year for any organ.

The C-AD conducted periodic radiation surveys of the ERL experimental areas prior to

*Instrument Readiness Review Committee (**IRR**)

operations,[1] as well as calculated and simulated low-intensity, credible beam faults.[2, 3] Radiation surveys were conducted during gun and cavity testing without beam and limited surveys with beam from the gun. No external radiation has been measured for any mode of operation presently achieved. These independent surveys and studies help assure the adequacy of the shielding design and radiological controls to achieve ALARA goals. C-AD has a strong program of using monitor TLDs in the field to monitor that ALARA goals are achieved.

The ALARA design objective is less than 500 mrem per year; viz., assuming 100% occupancy at known locations and a 2000-hour per year residence time yielding the design goal of 0.25 mrem/hr in continuously occupied areas. This objective is one-half the design objective stated in the federal regulation 10CFR835 § 835.1002 (b).

It is noted that ERL plans to be run only about 25% of a year (500 hours). Since there are many ways to control access and residence-time by area designation, training and signage and since dose rate declines with distance from the shield face, significantly higher dose rates are acceptable at the shield-face provided C-AD controls access and plans work in and around the ERL accelerator enclosure.

The following summarizes specifics of this review of ERL shielding against the C-AD shielding policy:

1. Annual site-boundary dose equivalent is less than 5 mrem.

The mechanism that will typically transport radiation to the site boundary is known as skyshine. Shielding enclosures often have thinner shielding on the roof than the side walls as the occupancy is intended to be lower, more restrictive, or not allowed. The leakage of radiation out the roof will scatter in the materials above the roof shielding and a small portion will be scattered to distant ground locations.

The Monte Carlo program MCNPX was used to calculate the dose to the building 940. At the time this was considered a non-C-AD area. The results are presented in the ERL Archival Safety Assessment Document . The site boundary is 1200 meters for the ERL facility. If the building 940 numbers are scaled by $(1/r)^2$ then the dose at the site boundary for 500 hours of operations would be 0.004 mrem/hr. The attenuation due to air has been ignored which would reduce the results substantially.

2. Annual on-site dose equivalent to inadvertently exposed people in non-Collider-Accelerator Department facilities is less than 25 mrem.

The nearest on-site non-C-AD facility is Building 703, which is about 400 m from ERL.

[1] ALARA Committee Documents

[2] ERL RSC Documents

[3] ERL Archival Safety Assessment Document

*Instrument Readiness Review Committee (**IRR**)

Scaling[4] the Building 940 results provides a yearly[5] skyshine dose estimate of 0.038 mrem/yr. This is much less than 25 mrem annually.

3. Maximum dose equivalent to any area where access is not controlled is limited to less than 20 mrem during a fault condition.

Maximum sustained beam losses are 1.2 MW for 3.5 MeV injection electrons and 60 kW for electrons in the 25 MeV ring. Credible routine losses are expected to be 1 W at beam injection and 50 W for the 25 MeV beam.[6]

The accessible areas contiguous to and nearby to the outside of the ERL shielding enclosure are protected by radiation monitor interlocks. There are no uncontrolled areas contiguous to the shielding enclosure. The closest uncontrolled areas are outside the building approximately twenty feet from the shielding enclosure. The radiation monitors have both an alarm setting and an interlock setting. The interlock setting is established to ensure that the dose received during a beam fault will not exceed 20 mrem in any uncontrolled area. For large dose rates at the radiation monitor the beam will be turned off within 3 seconds[7]. The operators respond to radiation alarms and interlocks using a C-AD OPM procedure[8]. ERL operation would be stopped by the ERL Operator following a radiation interlock trip, and the fault condition would be investigated and corrected.

A 20 mrem dose near the shielding enclosure would correspond to a maximum fault dose rate of 24,000 mrem/hr for 3 seconds. Review of the maximum dose rates outside the penetrations[9] and walls of ERL, as indicated in the ERL Archival Safety Assessment Document and by other independent reviewers, shows the maximum sustainable fault-dose-rate is less than 100,000 mrem h^{-1} in accessible, contiguous, Controlled Areas adjacent to the ERL enclosure. Some Controlled Areas may have a dose in an MCI approach 100 mrem. However, uncontrolled areas surrounding ERL, which are further away from Controlled Areas, would receive less than 20 mrem in a fault.

For sustainable fault dose rates, see Tables 4.1.2.a and 4.1.2.b in the ERL Archival Safety Assessment Document. It is noted that constant continuous loss of full-power 25-MeV beam pulses is not sustainable after the first lost beam pulse because energy would not be recovered and transferred to the next beam pulse. Also, it is noted the radiation monitor interlocks were assumed to respond after 9 seconds in the ERL Archival Safety Assessment Document.

4. For continuously occupied locations, the dose equivalent rate is ALARA but in no case greater than 0.5 mrem in one hour or 20 mrem in one week.

---

[4] Similar to the site boundary estimate the scaling will not include the additional air attenuation.
[5] Assumes 500 hours of operations in a year.
[6] ERL Archival Safety Assessment Document, Page 85, June 30, 2008
[7] This time includes 0.75 seconds for the radiation monitor to generate an interlock and 2.25 seconds for the access control system to turn the beam off.
[8] OPM 18.6.1 Responding to Chipmunk Alarms and Interlocks
[9] For an Updated Table of Penetrations see http://www.c-ad.bnl.gov/esfd/RSC/Memos/5_13_15_ERL.pdf

The ERL Control Room is the only continuously occupied area during operation of ERL. That area is designed to be a Controlled Area. The ERL Archival Safety Assessment Document, Table 4.1.2.b, indicates that for a sustainable loss of 50 W the annual dose to an individual in the Prototype ERL control room will be 41 mrem."

Table 4.1.2.b indicates a sustainable routine loss causes 0.082 mrem h^{-1} in the Control Room, which is less than 0.5 mrem in one hour and less than 20 mrem in one week. That table also shows the maximum sustainable loss would cause 98 mrem h^{-1} in the Control Room, which will trip the radiation monitor interlocks. The estimated dose in Table 4.1.2.b is 0.25 mrem per interlock trip. It is highly unlikely C-AD management and ERL Operators would allow 80 interlock trips per week, which would result in 20 mrem in one week.

5. Dose equivalent rates where occupancy is not continuous is ALARA, but in no case exceeds 1 rem in one year for whole body radiation, or 3 rem in one year for the lens of the eye, or 10 rem in one year for any organ.

Monitor TLDs are placed around the facility to measure the integrated dose for operations periods. Typically at C-AD the monitor TLDs are changed quarterly. The ERL facility is expected to operate on and off for brief periods throughout the year. The monitor TLDs will provide indications if ERL operations is producing excessive dose in external areas.

To help personnel avoid unnecessary dose, the radiation monitors that are located at the weakest ERL shielding locations were set up like a street light with red, yellow and green indicators. In addition to interlocks, a monitor will display a red blinking light for radiation levels greater than 20 mrem h^{-1}, and a yellow blinking light for levels from 2.5 to 20 mrem h^{-1}. Normally, radiation monitors operate in the green range indicating nominal radiation levels. Personnel are trained that if a radiation monitor is indicating in the red range or an unexpected yellow range, then they must leave the immediate area, and notify collaborators and co-workers to leave the immediate area. Thus, for the case of maximum beam losses, it is extremely unlikely that annual dose could exceed 1 rem for whole body radiation, 3 rem for lens of the eye, or 10 rem for any organ.

Copy to:

I. Ben-Zvi
P. Bergh
D. Kayran
D. Passarello
T. Roser
C. Schaefer

*Instrument Readiness Review Committee (**IRR**)

Collider-Accelerator Department

BROOKHAVEN NATIONAL LABORATORY

Building 911B – P.O. Box 5000
Upton, NY 11973-5000
Phone 631 344 7124
Fax 631 344 5568
beavis@bnl.gov
www.bnl.gov

managed by Brookhaven Science Associates
for the U.S. Department of Energy

Memo

Date: *June 19, 2014*

To: *RSC, D. Phillips, and D. Kayran*

Cc: *I. Ben-Zvi, G. McIntrye, and W. Xu.*

From: *D. Beavis*

Subject: *ERL Roof Shims*

This memorandum reports on calculations of the potential radiation external to the ERL shield adjacent to the location of the roof shims. The committee is asked to decide if the present wood shims are acceptable or at least acceptable until the ERL gun is removed at the end of the year.

Roof Shims

Roof beams are typically placed on spacers (shims) so that they sit well on the wall and no edges are stressed. The shims used for ERL are wood and are the width of the roof beam (2 feet in this case), one foot (30 cm) along the direction of the roof beam, and up to 0.5 inches thick. This space can act as a seam allowing elevated levels of radiation exterior to the shielding. The end sections of the ERL roof have had the wood replaced with steel shims that are as thin as possible. The center section of the roof still has wood shims. It is possible to replace the shims and an opportune time would be when the ERL gun is removed for rework which is scheduled for the end of the year. This would mean that initial beam operations with beam to the beam dump would start with the wood shims in place.

Method of Calculation

The calculations are conducted in analogous[1] fashion to those conducted for the laser port and cryo ports in the ERL shielding. MCNPX 2.7.C was used to calculate the photon and electron distribution at two meters from a 10 cm long copper target with a radius of 0.1 cm or 0.75 cm. There was no shielding in the model so that the distributions represent radiation from the target. The electron and photon distributions were then used as sources directed at the area of the roof shims. The dose distribution for 3.5 MeV and 25 MeV electrons is shown in Figure I and II. For a thin rod the electrons can escape the target and contribute to the dose. For 3.5 MeV electrons

[1] D. Beavis, " ERL Shielding Holes, Seams, and Penetrations for 3.5 MeV beam", May 27, 2014; http://www.c-ad.bnl.gov/esfd/RSC/Memos/ERL_Holes_5_27_14.pdf

striking the target the electron dose quickly decreases in the forward direction. The dose inside the shielding can be dominated by the electrons from the target. The roof shims are sufficiently thick[2] to remove all the electrons scattered from the target. The electrons from the target will be ignored when considering the wood shims. The wood shims do not have sufficient mass density to effectively remove the photons. The wood will be ignored[3] in examining the photon dose. The wood shims may be replaced in the future with steel shims. Steel shims would be nearly as effective[4] as the 4 feet of light concrete which comprise the side walls.

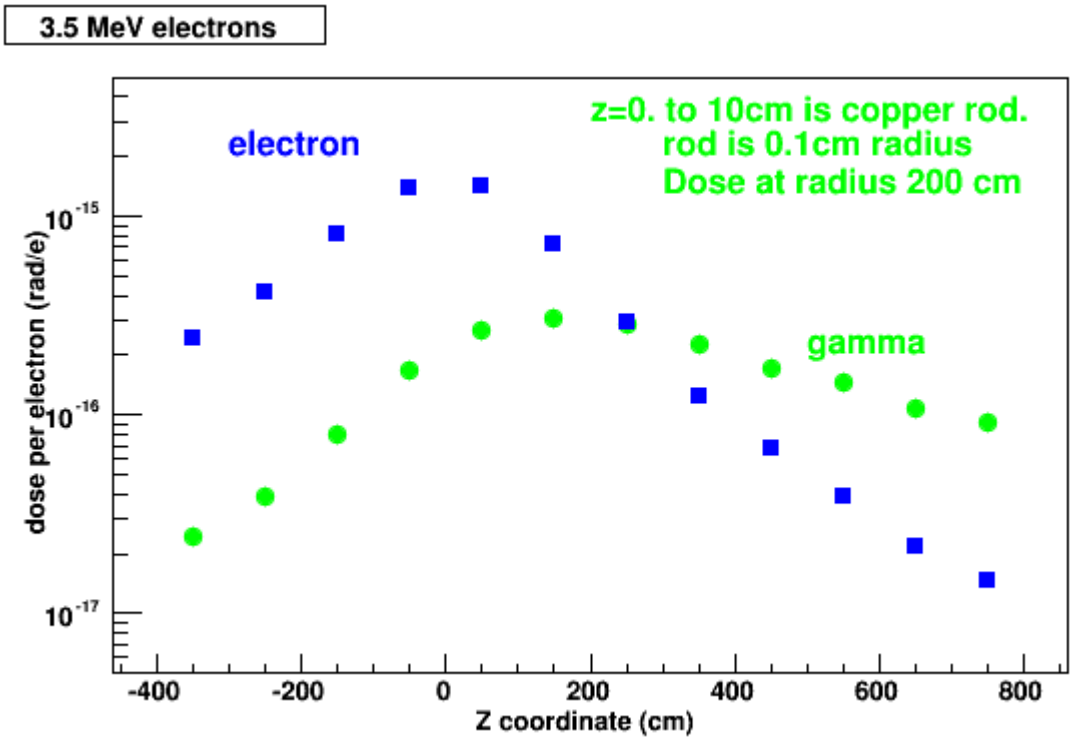

Figure I: The photon and electron dose per 3.5 MeV electron striking a copper target tallied on a two meter cylindrical surface. The doses are averaged over 100 cm sections of the surface.

Figure III displays the energy distribution for 3.5 and 25 MeV electrons striking a 10 cm long copper target. The fluence was tallied at 300 cm on a surface forward of 90 degrees. The target for 25 MeV has a radius of 0.75 cm and the 3.5 cm Target has a radius of 0.1 MeV. The thicker target causes a substantial reduction in the photon fluence in the low energy region.

---

[2] The density of plywood is approximately 0.55 gm/cc. The 12 inches provides approximately 16 grams of material to range out electrons scattered from the target.

[3] One calculation was conducted with 30 cm of carbon with density of 0.55 gm/cc. The exiting gamma dose was reduced by 15%.

[4] Using TVLs for 10 MeV the 12 inches of steel is equivalent to 3.7 feet of light concrete.

The photon distributions shown in Figure III were used as the source distributions in MCNPX. The photon fluence was directed at the roof to wall interface with a uniform angular distribution confined around a vector directed at the interface. The size of the angular distribution was changed to determine the impact of scattering off the roof. The attenuation of the roof to wall seam from inside to outside the shielding was determined by tallying the dose with point detectors. The dose at the inside of the wall was then multiplied by the attenuation to obtain the dose per electron external to the shielding. Typically the dose per electron was tallied at the outside wall rather than 30 cm from the wall.

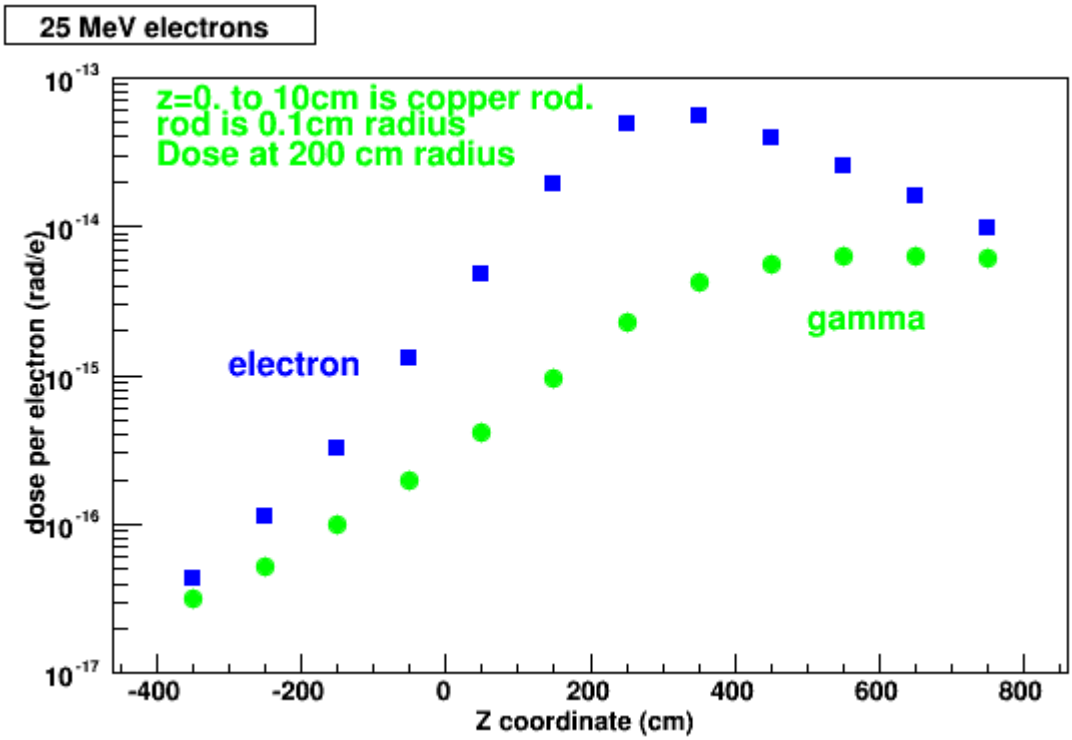

Figure II: Same as figure I except to 25 MeV electrons striking a copper target.

Results

The calculations were conducted for 3.5 MeV and 25 MeV electrons. The distances to the wall and the vertical heights approximated the geometry from either beam line to the near wall and the far wall. These geometries cover the conditions for beam in the low energy transport and for the 25 MeV beam in the ring. The results are shown in Table I. Sources at beam height that are farther from the wall have smaller angles relative to the seam resulting in less attenuation but the increased distance reduces the dose at the wall interface causing a nearly dose outside the shield.

The cone of photons challenging the roof to wall transition was limited in size to reduce computing time. Albedo from the concrete roof was examined by increasing the angular cone of photons and the calculation repeated for the 3.5 MeV case for 610 cm. The attenuation increased

by approximately a factor of two. The last column in table I has this factor of two included as an estimate to account for the additional dose. The calculation for the top row was repeated with a 0.6 cm gap rather than 1.2 cm. The attenuation was a factor of two smaller. In addition the dose was tallied 1 foot from the wall was a factor or two smaller than at the wall.

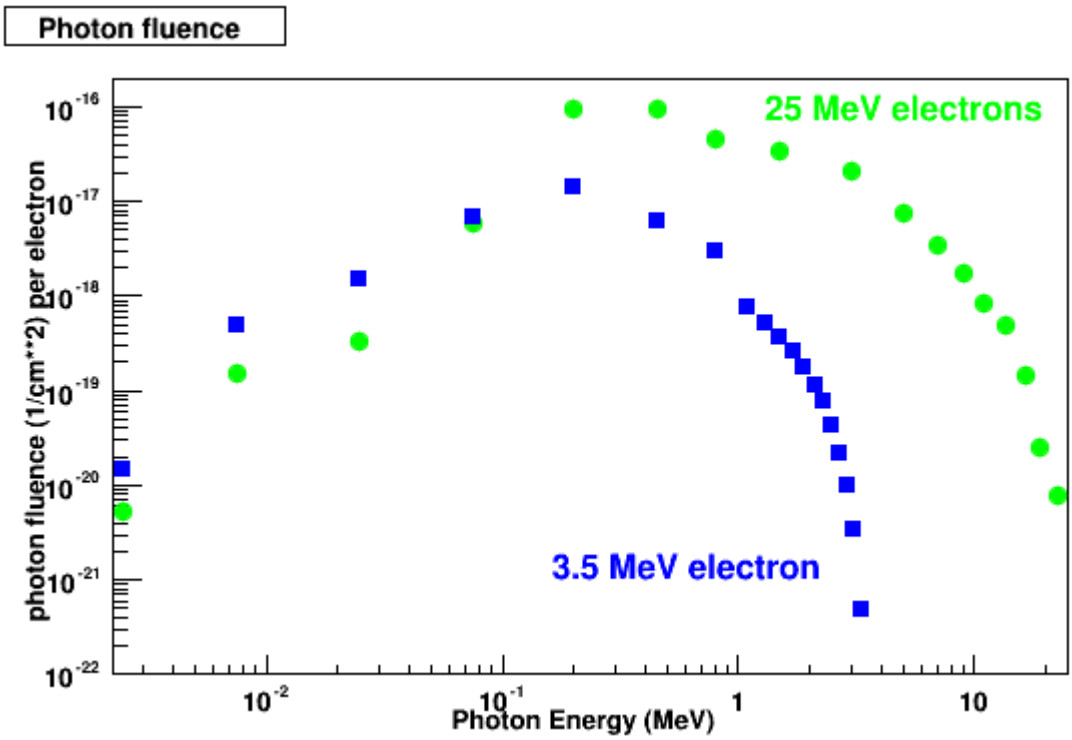

Figure III: Energy distribution for 3.5 MeV electrons striking a 0.1cm radius copper target 10 cm long at a distance of 300cm (blue squares). The green circles are for 25 MeV electrons striking a 0.75cm radius copper 10 cm long.

Table I: The Photon Dose for 100 Watts of Beam Loss (1.2 cm gap)

Electron Energy (MeV)	Distance to wall (cm)	Dose (mrads/hr)	Attenuation	Dose (mrads/hr) With roof reflection
3.5	260	4	$1.4*10^{-4}$	8
3.5	610	4	$3.9*10^{-4}$	8
25	260	10	$1.4*10^{-4}$	20
25	610	17	$8*10^{-4}$	34

Most locations of the roof to wall transition are adjacent to areas that are not typically occupied by personnel. The roof to wall transition is at an elevation of 13 to 14 feet above the floor where the wood shims exist for the east and west walls. Figure IV displays the ERL facility. The shielding wall at the top of Figure IV is the west wall. The area outside the west wall has an exclusion area for about six feet. The Klystron power supply house is excluded of personnel for beam operations. Eight foot thick walls exist south of the power supply house and the seams are

effectively shielded. Further along the east wall the second floor of the utility building can have personnel present. The heavy concrete interior wall will reduce the dose challenging the shim seam substantially for the portions of the transport that are close to the wall. Losses in the ERL ring far for that wall will not be shadowed. A portion of the low energy transport just after the gun can also illuminate the seam before the interior wall starts. Increasing the height of the wall may be appropriate if the chipmunks[5] are not sensitive to the faults that can direct radiation past the interior shield wall.

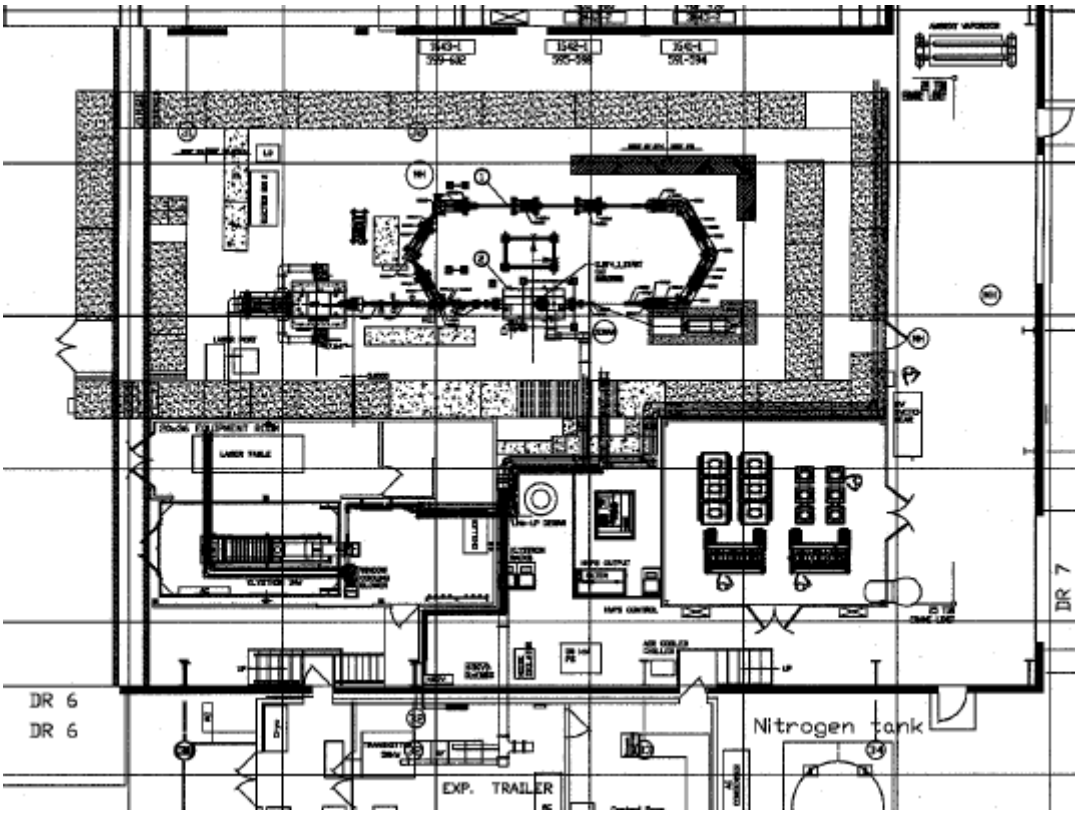

Figure IV: Plan view of the ERL block house and adjacent areas.

Localized 3.5 MeV electron beam losses of 1000 Watts will have potentials dose rates[6] less than 100 mrads/hr. For 25 MeV beam the dose rates for 1000 Watts will be less than 350 mrads/hr. For areas posted and controlled for no elevated work these potential dose rates are probably acceptable for the short term. The second floor of the utility building could have occupany with these potential dose rates. Beam fault studies should help determine an appropriate beam power limit with the wood shims in place. Once the steel shims are in place the roof to wall transition is expected to have dose rates similar to the side wall shielding.

[5] The west cryo port exit chipmunk (NMO174) and 50 kW waveguide chipmunk (NMO173) are expected to be sensitive to most of the ring loss locations that could challenge the roof to wall shim area adjacent to the electrons building. However, a small portion of the south ring may illuminate a potion of the seam and be chipmunks either shadowed or in the backward direction.

[6] The exposure area would have a vertical height of less than 2 cm.

Collider-Accelerator Department

BROOKHAVEN NATIONAL LABORATORY

Building 911B – P.O. Box 5000
Upton, NY 11973-5000
Phone 631 344 7124
Fax 631 344 5568
beavis@bnl.gov
www.bnl.gov

managed by Brookhaven Science Associates
for the U.S. Department of Energy

Memo

Date: *July 14, 2014*

To: *RSC, D. Phillips, and D. Kayran*

Cc: *I. Ben-Zvi, S. Belomestnykh, and W. Xu.*

From: *D. Beavis*

Subject: *Examination of Miscellaneous Shielding Changes at ERL*

The shielding designs for several areas of ERL have changed since the original shielding estimates were conducted. The ones that are not previously described are discussed in this note.

Changes to the 1 MW Waveguide Port

The shielding surrounding the top portion of the waveguide is now steel rather than heavy concrete. This change decreases the photon dose for direct punch through. A narrow area on the side of the port has 15 inches of steel with the rest having two feet. The section with 15 inches of steel would allow 1.4 R/hr to enter the waveguide port over a small area. The photons would require a reflection (bounce) to exit the port creating a dose rate of 50 mrads /hr for a 1 megawatt loss of 3.5 MeV electrons.

There are potential rays that can cut through the heavy concrete side wall and into the port. These rays are estimated to produce 20 mrads of dose for 1 megawatt of 3.5 electrons.

The port needs to be examined for 25 MeV beam loss and especially the neutrons. A loss just backwards of 90 degrees can illuminate the thin steel block. The estimated dose out the port is 50 mrads/hr for a 50 kW beam loss at 25 MeV. Heavy concrete on the side of the port can also be illuminated and result in 5.7 rads/hr exiting the port. A location in the ring farther away can illuminate the exit of the port through the 3.2 feet of heavy concrete at a production angle of 30 degrees. The estimated dose rate is 25 rads/hr for photons.

The dose rate due to neutrons can be estimated using an attenuation length of 45 g/cm^2 for heavy concrete. The neutron dose rate for 50 kW of 25 MeV beam losses is 200 mrem/hr for the section where the neutrons transverse 3.2 feet of heavy concrete. The steel is not as effective in shielding the neutrons from the 25 MeV electron beam losses as the photons. The neutrons can

transverse 2 feet of steel (attenuation length of 100 g/cm^2) and then scatter to the exit of the port. A crude estimate of 300 mrem/hr is obtained for 50kW of beam loss.

1 MegaWatt Port Summary

Source	Source location	loss	Dose rate (mrem/hr)
3.5 MeV e^-		1000 kW	50 photons
25 MeV e^-	In last leg of ring—90 deg.	50 kW	5,700 photons
25 MeV e^-	South leg-30 degrees	50 kW	25,000 photons
25 MeV e^-	In last leg of ring—90 deg.	50 kW	300 neutron

Dump to ODH Port

The geometry of the beam dump shielding to the ODH port has changed. The initial design philosophy stated that the beam dump shield should be thick enough so that the radiation exiting the beam dump shield would be no higher than that of routine losses. The present shield has only 3 inches of steel on top so that this has a potential impact for dose to the ODH port. The beam dump has five inches of steel on the bottom and both sides. The end of the shield has an additional five inches that acts as a counter weight but also provide additional shielding.

A simple calculation using TVLs will provide an estimate of the dose out the top concrete cover of the ODH port. The x-rays must go through 3 inches of steel, a total of 3.6 feet of light concrete and travel a distance of 4.3 meters. One megawatt of 3.5 MeV beam into the beam dump results in a dose rate out the top of 220 mrads/hr.

A simple calculation was conducted for a loss in the beam transport before the beam dump. A source dose rate of 10^4 rad/(hr-kW) at one meter was used. A one MW beam loss would result in a dose of 75 rads/hr out the top of the 1.5 foot thick cap block. There are potential rays that can penetration the north shielding blocks of the vent port. These blocks are two feet thick and the angle would have the photons penetrating 2.6 feet of light concrete. One megawatt beam loss would create 100 rads/hr for a small portion of the block. Angles in the transport can illuminate the four thick side blocks which would produce less than 4 rads/hr.

Miss-steering by Dipole in Front of Beam Dump

The last dipole in the extraction channel does not presently have an interlock that requires the magnet current to match the beam energy. If the dipole is turned off the beam will strike Pb, then the steel shielding, and finally the concrete wall. The electromagnetic shower would have 20 cm of Pb, 25 cm of steel and 2.4 meters of light concrete. This shielding (19 TVLs) would be more

than sufficient to terminate the radiation. If the dipole bends at an intermediate angle to miss the lead shield the beam will enter the beam dump. The side shield at such an angle is equivalent to 40 inches of steel . Followed by the concrete wall the shielding is more than sufficient.

The cast steel block behind the beam dump is two feet thick with an approximate density of 7 g/cm^3. The dose rate at the distance of the gate would be 570 mrads/hr without taking credit for the concrete wall and would be reduced to 0.03 mrads/hr by the concrete wall. The heavy concrete on top and below the iron block does not provide as much attenuation as the steel block but are not located at zero degrees. The dose rate at the gate assuming the iron block is heavy concrete would be 42 mrads/hr to one MW of 3.5 MeV electrons. The heavy concrete should be sufficient for the vertically inclined radiation going over or under the steel block.

Miss-steering By the First Extraction Dipole

The first dipole for extracting the beam provides a 30 degree bend to the 3.5 MeV beam. The maximum bend will be assumed to be 45 degrees[1]. Allowing the 3.5 MeV beam to directly strike the concrete wall would create 11 rads/hr into the klystron power supply building and somewhat smaller dose rates in the area adjacent to the locked building.

Shielding Over the Beam Dump

The dose rate through the roof was examined for the beam dump as the source. The section of roof over the beam dump has two layers of roof beams providing a total of eight feet of light concrete. The dump shield has three inches of steel. Ignoring any possible seams in the roof the dose rate on the roof would be 0.03 mrad/hr for 1 MW of beam. The roof becomes one layer just after the beginning of the beam dump end shield. There is a vertical angle where radiation would need to penetrate 3.5 inches of steel and 4.6 feet of light concrete to escape the enclosure with an estimated dose rate of 620 mrads/hr. The addition of another roof beam would decrease this to 2 mrads/hr. The roof is not allowed to have personnel on it during operations of ERL with radiation sources.

The dose through the nearby side wall will be 40 mrads/hr. A more detailed estimate[2] was provided by K. Yip with a dose rate was 0.1 mrad/hr at a location slightly upstream of the beam dump and four feet from the wall[3]. The use of empirical techniques with TVLs often overestimates the dose rates, which may partially explain the difference between the two estimates. The klystron power supply house cannot be occupied with beam operations at ERL and the dose rate would decrease substantially to the areas that are allowed to be occupied.

---

[1] At the time of this report the maximum bend angle had not been confirmed for 3.5 MeV.
[2] http://www.c-ad.bnl.gov/esfd/RSC/Memos/kin_dump.pdf
[3] This is the closest location that can be occupied by personnel.

The decreased shielding around the beam dump may increase the difficulty of using radiation detectors at weak locations to limit beam losses to low levels. The one MW of beam into the dump appears like a 10kW loss in north east corner assuming the 5 inches of shielding. If radiation detectors are placed to limit losses at the 10-100 Watt level it may be difficult to filter out the beam dump. The beam dump may need to have shielding added to allow the radiation monitors to limit the losses at arbitrary locations. Fault studies and low power routine operations should help in establishing the final configuration.

Collider-Accelerator Department

BROOKHAVEN NATIONAL LABORATORY

Building 911B – P.O. Box 5000
Upton, NY 11973-5000
Phone 631 344 7124
Fax 631 344 5568
beavis@bnl.gov
www.bnl.gov

managed by Brookhaven Science Associates
for the U.S. Department of Energy

Memo

Date: *Dec. 18, 2014*

To: *RSC, D. Phillips & D. Kayran*

From: *D. Beavis*

Subject: *Comparison of MCNPX with ERL Fault Study 232*

The electron beam at ERL was transported to a stainless steel flange at the end of the straight beam line in Fault Study 232. During Fault Study 233 the beam was transported onto the copper slits and into the first bend. The beam was measured to have a current of 0.7 micro-Amperes during the beginning of FS 232 and decrease with time. The energy was measured to be between 1.2-1.3 MeV. During the two fault studies there was no radiation detected outside the shielding above the minimum detectable level. It is of interest to determine if the detected radiation levels inside the shielding enclosure agree with expectations.

There will be many factors which will make a careful comparison difficult including, the dark current, the x-rays from the gun, low pulsed beam current, and the scattering from numerous surfaces. Therefore the intent should be to determine if the radiation detected is reasonable to an order of magnitude. It will be concluded that radiation levels are consistent to an order of magnitude but to draw any real conclusions the signal to noise in the measurements in the future will need to be improved.

There are a total of six chipmunks inside the ERL enclosure. The results from a simple MCNPX model will be compared to three of the chipmunks. Several of the chipmunks were not able to detect the radiation since they were setup with the intention to allow the ERL to operate with a beam loss of at least 10W at an energy of 3 MeV. Chipmunk NM177 was on the enclosure floor at a distance of 4 meters from the flange. The polar angle was approximately 155 degrees. Chipmunk NM181 was on the west wall surrounded with approximately 1 foot of light concrete (patio blocks). Chipmunk 181 location is two feet downstream of the flange and 5.8 meters away. The intent of this chipmunk was to monitor the beam on the flange and prevent high current. Chipmunk NM176 sits behind a heavy-concrete wall that is 81cm thick. The heavy concrete wall forms a portion of the south labyrinth. The location of NM176 was chosen to allow it be sensitive to x-rays reflecting off the back-wall. The flange to the heavy concrete wall is 7.1 meters. The gun structure obstructs some of the x-rays directed towards the back wall. NM176 is 2.8 meters off axis from the beam and the wall starts at 1.8 meters.

The beam current decreased with time during the studies. The relative current for the three loss points are:

Loss point	Current (micro-A)	Relative to beginning FS 232
Faraday Cup	0.7	1
Copper slits	0.26	0.37
After first bend	0.12	0.17

The chipmunk NM177 detects radiation from the gun and the beam losses. The radiation level in mr/hr by NM177 is given in Figure I. There are three distinct periods of time with elevated radiation. From 12:00 to 14:00 the beam is on the flange. At 18:04 the beam is on the copper slits before the first dipole. Finally, at about 20:04 the beam is bent down in the first leg of the vertical chicane by the dipole. Examining the data for when the laser is off suggests that 22 mrads/hr come from the gun. Therefore at the beginning of FS232 only 6 mrem/hr is from the flange.

The ERL enclosure was approximated light concrete 3 meters from the beam axis with rotational symmetry about the beam axis. 1.25 MeV electrons struck a copper target 4 cm in radius and 1 cm thick to approximate the stainless steel flange. The photons were tallied along the inside surface of the wall and then at increments of 15 cm into the light concrete to a thickness of 60cm. The dose was tallied in 1 meter segments. The segment from z=0 to z=100cm was examined at a depth of 60 cm (1 foot). The dose per electron[1] was $1.1*10^{-20}$ rads/e. The dose rate at NM181 is expected[2] to be 0.05 mrad/hr. Based on the chipmunk readout the dose rate during the fault study was 0.03 mrad/hr (see Figure III). The time period near 18:00 has about half the radiation detected while the beam is on the copper slits. There is no line of sight between the slits and the chipmunk. The radiation scattered from the walls and floor.

The MCNPX dose per electron in the backward direction was $2.7*10^{-18}$ rads/hr at a distance of 5.4 meters. The estimated[3] dose rate at the chipmunk is 78 mrads/hr compared to the measured 6 mrads/hr. The calculation only includes the direct radiation and not the components scattered from the surfaces. The agreement is poor but reasonable. It would be hoped that with high beam current a closer agreement can be obtained. For the copper slits the difference in distance and beam current nearly compensate, although NM177 measures nearly twice the dose rate than the flange. Material upstream of the flange may shield some of the x-rays from reaching NM177.

[1] This is for photons with energy greater than 100 keV. The ion chamber has a rapidly decreasing response to photons below 100 keV. The dose per electron is 1.210^{-20} rads per electron if the response is ignored. See Figure II for the chipmunk ion chamber response.

[2] The distance of 5.8 meters to 3.3 meter is used to adjust for the scale difference in the model and the actual geometry.

[3] The distance has been scaled and the dose corrected to include only photons above 100 keV. It has been assumed that the angular distribution is isotropic in the backwards direction at this energy.

NM176 measured 0.06 mrads/hr with the beam on the flange. Using the wall area on the unblocked side of the gun structure an estimated 0.24 mrads/hr would be detected at the chipmunk. The calculation again overestimates the dose registered by the chipmunk. A substantial portion of the detected radiation may come from the gun as in the case for NM177

The next beam tests are expected to occur on Dec. 3. To increase the sensitivity of NM181 9.5 cm of concrete was removed from around the detector. NM182 had 9.5 cm removed[4] from the side and 20 cm from the front. NM 178 has been place downstream of the flange elevated to avoid shielding by ring components. These changes should help to provided better measures of the radiation source. To increase the beam radiation to gun x-rays the wavetrain will be made longer to get more beam intensity. Some points of FS 232 and 233 will be repeated along with FS 234. The results will be examined to see if the measurements provide additional information.

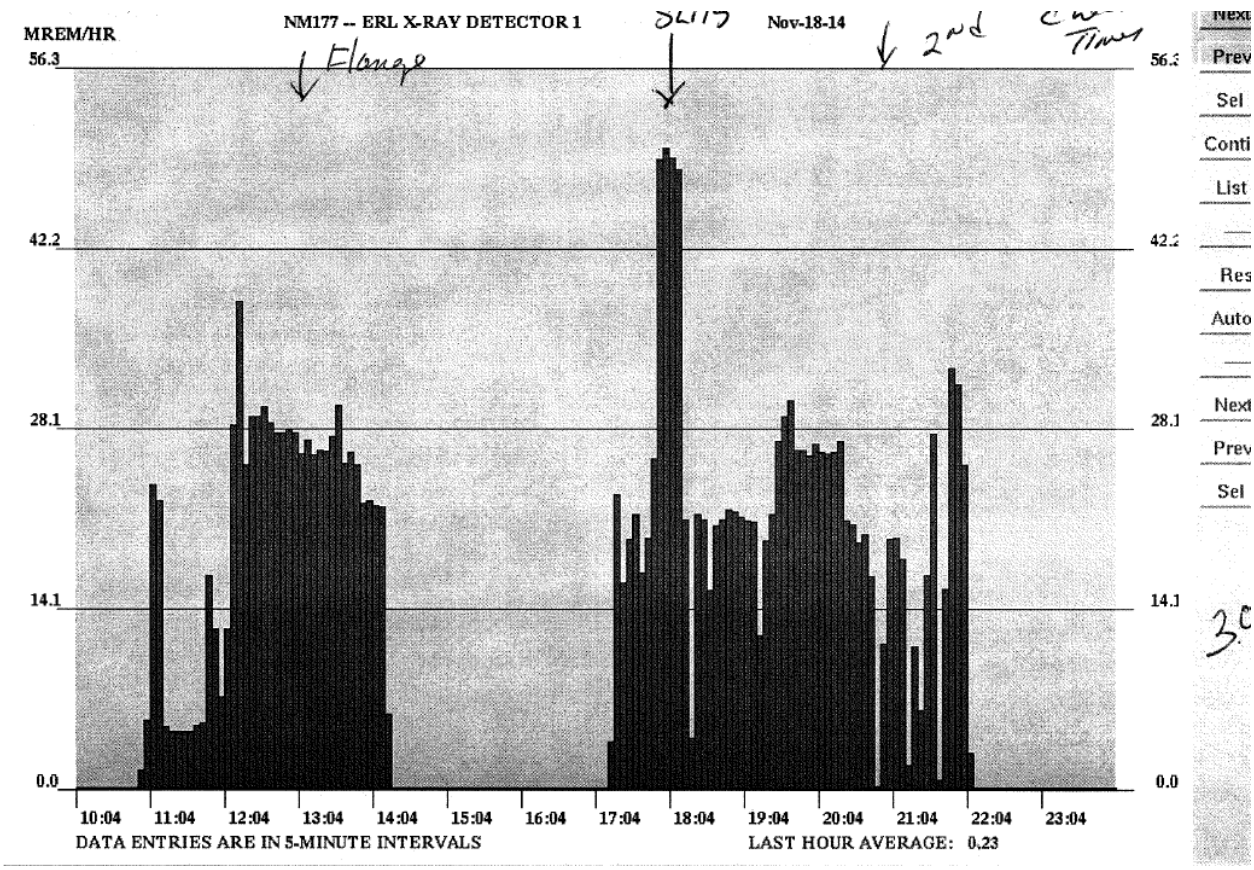

Figure I: NM177 readings during the Fault Study 232 and 233. The beam on flange produces a dose rate of 28 mrads/hr. The beam on the slits produces a dose rate of 50 mrads/hr. The beam in the first bend has a dose rate of 25 mrads/hr.

[4] 15cm of light concrete provides a factor of 10 in radiation production.

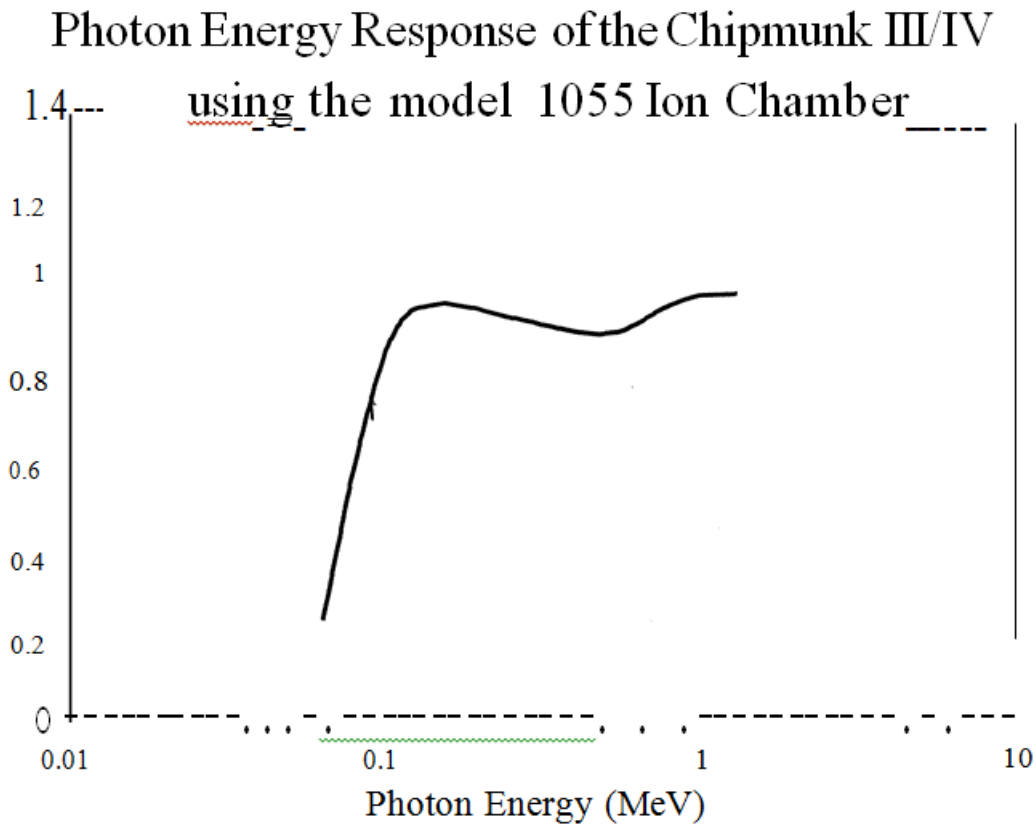

Figure II: Ion chamber response for the chambers used in chipmunks. From F. Krueger and J. Larson, FERMILAB_Pub-01/337 Nov. 2001 by.

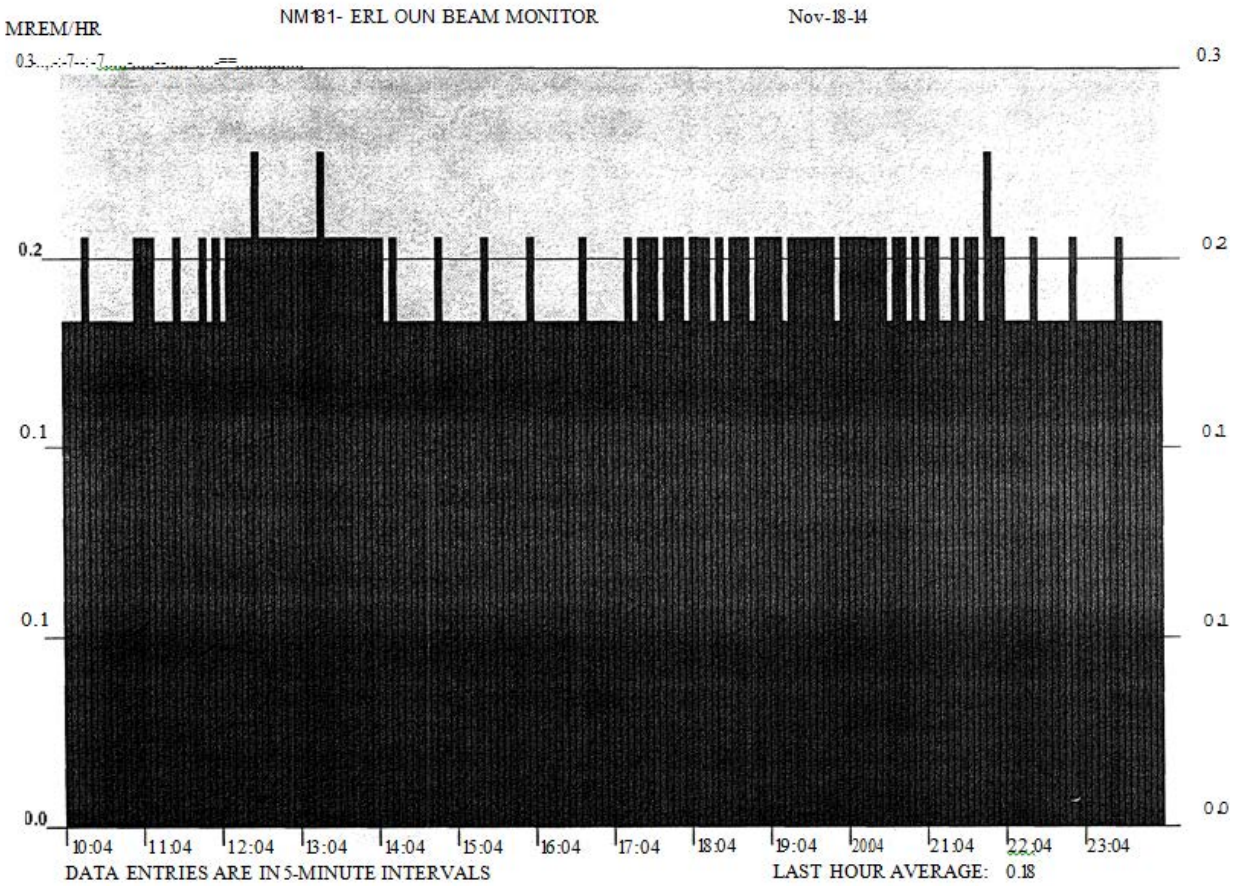

Figure III: Chipmunk 181 data during the fault studies 232 and 233. The data from 12:00 to 13:00 is for beam on the flange. The time window near 18:00 is for beam on the slits and for 20:00 for beam bent by the first dipole.

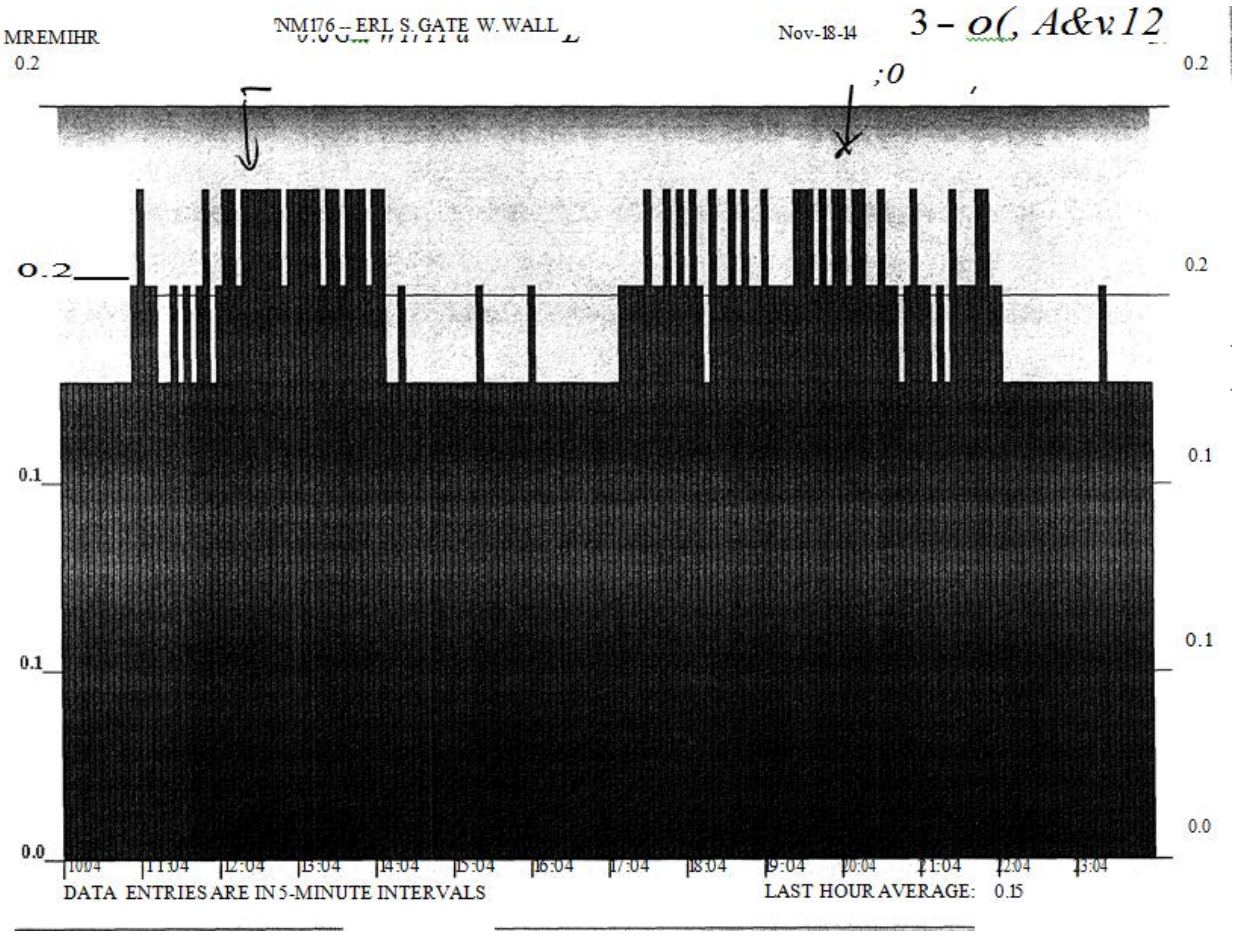

Figure IV: NM176 response during the Fault Studies 232 and 233.

Prepared By:
Wencan Xu
Date: December 31, 2014
Reviewed by: Tom Rimmer
Date: 12/31/14
Approved by: Vaughan Radke
T. Roser
Date: 1/2/15

ERL RSC Check-Off List for Cold Emission Testing of the SRF gun ERL and 5-cell Cavity

Completion of this ERL RSC Check-Off List is a prerequisite for cold emission testing of 5-cell cavity, SRF gun, and Fundamental Power Coupler (FPC) Conditioning.

Upon Completion of this check-off list and the completion of the ASSRC check-off list in the MCR the ERL cold emission testing may commence.

1. _____(LP) **RSC LOTO has been applied to prevent the 50 kW and 1 MW klystron power supply from being energized. This or the equivalent must remain in place till the check-off list is complete.**

2. _____(LE) ERL Block house shielding and barriers inspected and acceptable for CET and FPC conditioning operations.

3. _____(LE) The barriers are in place at both ends of the trench and posted.

4. _____(LE) The ladder at the power supply house has a locked barrier and is posted.

5. _____(LE) Area surrounding ERL posted as no ladders/no climbing.

6. _____(LE) Waveguide is in place for 1MW system through penetration in second story of "condo"; the short plate on the end of waveguide is still in place, or the waveguide is connected to the SRF gun.

7. _____(LE) Waveguide for 5-cell cavity is terminated with short plate, or connected to the 5-cell cavity.

8. _____(RCD) Entrance gates to the ERL block house posted.

9. _____(RCD) Outside entrances to 912 building ERL blockhouse posted as Controlled AREA, TLD required.

10._____(RCD) Post gates for fenced area on west side as RCT escort required when ERL is operating.

11. _____(RCD) The door to the Klystron posted.

12._____(RCD) Access panel on north side of electronics room posted as RCT escort and survey required when ERL is operating.

13._____(RCD) Gates to west alley way posted as access prohibited without an RCT escort.

14. _____(ACIG) Chipmunk operation valid for alarms.

15. _____(ACG) PASS tests, ODH, and chipmunks are still valid for ERL operations of the gun and five-cell cavity.

16. _____(ACG) All bypasses or temporary jumpers in place have been discussed with the RSCC.

17._____(OC) Blockhouse and west fenced area are verified as swept and locked.

18. _____(LP) The items listed above have been completed.

19. _____(OC) List completion verified by on-duty operations coordinator.

When the list above is complete then cold emission testing of the gun or ERL 5-cell cavity may begin.

When the cavity is ready to potentially generate x-rays the on-duty RCT needs to be in the area to conduct surveys of the shielding and penetrations. After the surveys have been reviewed the configuration of the area postings near the blockhouse will be determined.

RCD: Radiation Controlled Division: P. Bergh or designee. Ext:5992
LE: Liaison Engineer: D. Phillips or designee. Ext. 4671
LP: Liaison Physicist: Sergey Belomestnykh or designee. Ext: 8448
MCRGL: MCR Group Leader: Peter Ingrassia or designee. Ext. 4272
RSCC: Radiation Safety Committee Chairperson: D. Beavis or designee Ext: 7124
OC: Operations Coordinator Ext. 8061(Wencan Xu)
ACG: Access Control Group: J. Reich or designee. Ext: 5335
RCT: Radiation Control Technician
ACIG: Accelerator Components & Instrumentation Group: Tony Curcio (4659)/Joe Citro or designate.
CEE: Chief Electrical Engineer: J. Sandberg or designee. Ext: 4682
RGDC: CA RGD custodian: A. Etkin or designee. Ext: 4006

ERLGL: ERL Group Leader Ilan (5143) or Dmitry (5136)

CHIPMUNKS

Name	Location	Interlock [mrem/hr]	Alarm (mrem/hr)
NMO170	North Labyrinth	20	10
NMO171	North Gate	2.5	1
NMO172	1 MW Waveguide port	2.5	1
NMO173	50 KW waveguide area	2.5	1
NMO174	West cryo pipe exit	2.5	1
NMO175	South Gate	2.5	1
NMO176	South Labyrinth	50	20
NMO177	Internal to ERL 1	-	-
NMO178	Internal for ERL 2	-	-
NMO181	Gun Power limit	20	10
NMO182	Power Limit gun and Dump	20	10

Meyer, Christine

From: DiFilippo, Lynanne
Sent: Monday, December 29, 2014 11:04 AM
To: Ben-Zvi, Ilan; Blaskiewicz, Michael M; Blydenburgh, Tracy R; Bubka, Steven; Cestra, Karen N; Dowling, Donna M; Fischer, Wolfram; Gibbs, Doon L; Karol, Raymond C; LaMontagne, Stephanie H; Lessard, Edward T; Lamberti, Ann; Litvinenko, Vladimir; Makdisi, Yousef I; Mueller, Berndt; Peggs, Stephen G; Sandberg, Jon N; Spencer, April; Tuozzolo, Joseph E; Tribble, Robert; Roser, Thomas
Cc: Capasso, Frances; Flynn, Liz; Ohlsen, Maria; Luhrs, Ann Marie; Asselta, Sandra L; Cantelmo, Doreen; Collins, Dolores A; DiFilippo, Lynanne; Hoffman, Caitlin; Manning, Pamela; Meyer, Christine; Petway, Annabelle; Pilkington, Alyssa; Rivera, Nina; Tuohy, Kathleen
Subject: Delegation of Authority - T. Roser

Categories: Orange Category

Thomas Roser will be away from the Laboratory Friday, January 2, 2015 through Tuesday, January 6, 2015. In his absence, Wolfram Fischer will act on his behalf. Wolfram may be reached at ext. 5452, or by e-mail at wfischer@bnl.gov.

****

Lynanne DiFilippo
Assistant to the Chairman
Collider-Accelerator Department
Brookhaven National Laboratory
35 Lawrence Drive, Bldg. 911B
Upton, NY 11973-5000
Tel: 631-344-4619
Fax: 631-344-5954
e-mail: difilip@bnl.gov

Photon Sciences Directorate

Upton, NY 11973-5000
Phone 631 344-4416
Fax 631 344-5059
pkjob@bnl.gov

Managed by Brookhaven Science Associates
for the U.S. Department of Energy

Building 745
P.O. Box 5000

http://www.bnl.gov/nsls2

Radiation Safety Memo

To: D. Beavis, Chair, CAD Radiation Safety Committee

From: P. K. Job, PSD Radiation Physicist

Subject: Dose Calculations for ERL Seams using FLUKA

Ref: Memo dated July 8, 2014 to RSC

Date: January 20, 2015

There are series of seams on roof and lateral wall of the ERL concrete shielding. Calculations had been carried out by D. Beavis using MCNP Monte Carlo program (Memo dated July 8,2014) to evaluate the radiation dose rates at the seams while ERL is operating. One of these calculations has been modelled by FLUKA Monte Carlo program to gain better confidence in the MCNP dose estimates.

The concrete shielding of the ERL enclosure is 122 cm thick normal density concrete (density 2.35 g/cm^3). The electron beam is 300 cm from the closest lateral wall and roof. The energy of the electron beam is taken as 3.5 MeV at 100 watts of beam power. 100 watt beam corresponds to 6.44x10^{17}e/h. The maximum width of the seams is taken as 1 cm. This configuration has been modelled in FLUKA. The enclosure has air at atmospheric pressure. Calculations have also been repeated without air in accelerator enclosure for better comparison with the MCNP results. The beam loss of 100 W is assumed to be taking place directly across the seam location at the beam line. The beam loss is simulated as scattering of the full beam from a 10 cm long 2 mm diameter copper target.

Ambient dose equivalent rates have been calculated on contact and at 30 cm from the roof and lateral wall seam surfaces.

Figures 1 and 2 give the dose rates on contact and at 30 cm from the seam of 1 cm shield gap with air in the enclosure when 100W electron beam of 3.5 MeV is lost at the copper target directly across the seam.

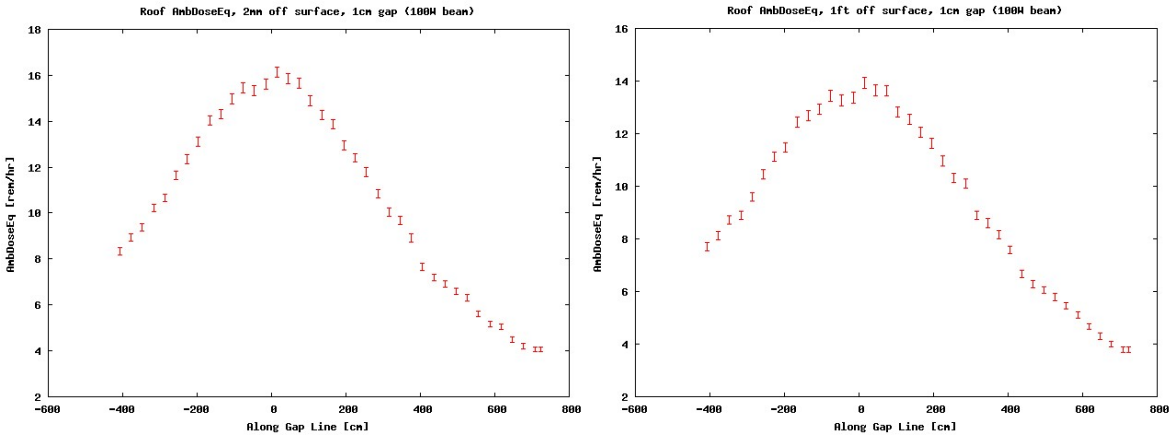

Figures 1 &2 Ambient Dose Equivalent Rates at the Seams of 1 cm on Contact and at 30 cm for 100 W Beam loss with air inside the accelerator enclosure

The calculations have been repeated for the same configuration without simulating air scattering inside the accelerator enclosure. This configuration had been simulated with MCNP program and the result provided a convenient point for comparison. Figures 5 and 6 give the dose rates on contact and at 30 cm from the seam of 1.0 cm shield gap without air in the enclosure when 100W electron beam of 3.5 MeV is lost at the copper target directly across the seam.

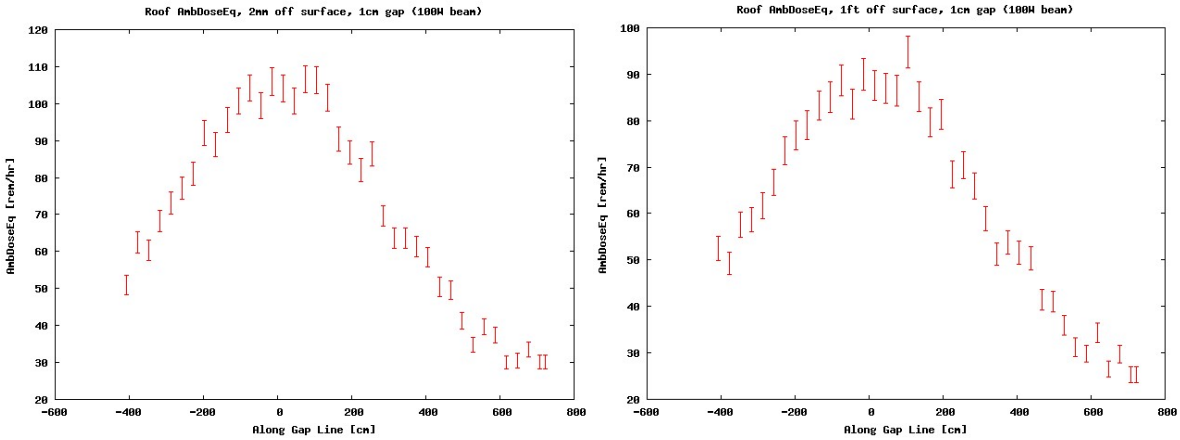

Figures 5 &6 Ambient Dose Equivalent Rates at the Seams of 1 cm on Contact and at 30 cm for 100 W Beam loss without air in the enclosure

The dose results at 30 cm from the seam surface show excellent agreement with the MCNP result for 1 cm wide seams without air scattering inside ERL accelerator enclosure.

Table 1 Summarize the dose rate results from FLUKA calculations for the ERL roof and lateral seams.

Table 1 Summary of FLUKA Dose Rate Results

	Shield Gap	Maximum dose rate at the shield gap surface **(rem/h)**		
		MCNP at 30 cm	FLUKA at 30 cm	FLUKA on contact
With air scattering in the enclosure	1 cm	--	14	16
Without air scattering in the enclosure	1 cm	91	90	105

Conclusion

The FLUKA dose rate results without simulating air scattering inside the accelerator enclosure agree well with the available MCNP result for 1 cm wide seams reported by Dana Beavis in his memo dated July 8, 2014 to the CAD Radiation Safety Committee.

Cc: Robert Lee
Charles Schaefer