Report of the Nuclear Science Advisory Committee Electron-Ion Collider Costing Subcommittee

May 1, 2015

Executive Summary

A Nuclear Science Advisory Committee (NSAC) Subcommittee met in Chicago to review the Electron-Ion Collider (EIC) preliminary cost estimates on January 26-28, 2015. Two proposals were presented: eRHIC (electron Relativistic Heavy Ion Collider) by Brookhaven National Laboratory (BNL) and MEIC (Medium Energy Electron Ion Collider) by Thomas Jefferson National Accelerator Facility (TJNAF, JLab). Guidelines to the Sub-Committee from the NSAC Chair (Appendix I) read '*Understanding that a detailed conceptual design has not been completed, the Sub-committee is asked to provide NSAC with its best current estimate of costs of the projects that will address the physics opportunities identified in the EIC White Paper (arXiv: 1212.1701v2), including R&D, construction, pre-operating and operating costs and initial experimental equipment. NSAC is aware that there are uncertainties regarding siting and other issues that limit the precision of such an estimate at this time. Nevertheless, the advice of the Sub-committee will be of great value to NSAC as it evaluates the relative merit of this and other initiatives."* The subcommittee members were C. Adolphsen, G. Bock, K. Boudwin, T. Glasmacher, S. Holmes, M. Klein, R. Laxdal, D. Leitner, J. Seeman, E. Temple chair, and D. Geesaman ex-officio. (Appendix 2)

The two proposals largely address the energy and luminosity requirements of the Electron-Ion Collider White Paper. While eRHIC exceeds the white paper goal of 100 GeV/u for all ion species with a maximum e-p center of mass energy of 145 GeV, the MEIC will achieve a maximum e-p center-of-mass energy of 63 GeV and center-of-mass energies of 40 GeV/u for the heaviest ion beams. Both designs achieve maximum luminosities that exceed the EIC white paper goals.

The presented cost estimates, in FY15$, ranged for the Total Project Costs (without detector) of TPC(eRHIC) = $756M to TPC(MEIC) = $1,290M to Total Project Cost (with detector) of TPC(eRHIC) = $986M to TPC(MEIC) = $1,480M. The estimates of the annual operating costs were presented as eRHIC = $173M and MEIC = $117M. eRHIC incorporates certain technical advances which are beyond the state of the art. The proposed 31% contingency is, in the opinion of the subcommittee, insufficient. MEIC is based on largely conventional technology with fewer technical risks. The proposed 35% contingency is marginally sufficient. Other Project Costs (Research and Development [R&D], Pre-operations, conceptual design and environmental studies) were not estimated as carefully or at all. Both R&D and Pre-operations for both proposals are thought to be underestimated.

Of the uncertainties that remain, the subcommittee considers the dominant ones to be technical. Given these technical uncertainties, based on the plans presented by both teams, the subcommittee concluded that an EIC could be built for about $1.5B in FY15$. We note that critical information on the performance of the eRHIC energy recovery linac (ERL) and the coherent electron cooling (CeC) approaches is planned to become available in 2016. Such information could go a long way toward reducing

the greatest technical uncertainties for the eRHIC concept. The total on-project cost for both approaches may potentially be reduced as technical risk is retired, by off-project funds especially for the detectors from international sources, by redirection of operating funds at the host laboratory or by reducing the design requirements.

Brookhaven eRHIC Proposal Cost Estimate Executive Summary

The Brookhaven National Laboratory eRHIC proposal team presented their current technical concept design, R&D, construction, pre-operations, and operations plan – cost estimate and schedule – to an NSAC EIC Cost Estimate Review Sub-committee on January 26, 2015. The BNL team returned on January 28 to answer questions of the subcommittee.

eRHIC is a linac-ring design, utilizing the existing RHIC complex and one of the RHIC rings as the ion ring. The electron beam is produced in a high current (3-50 mA depending on the choice of center of mass energy) polarized electron source and is accelerated up to 16 passes through a 140 m super-conducting radiofrequency energy-recovery linac (ERL), with the electrons gaining 1.32 GeV per pass. After a single interaction with the ion beam the energy is recovered as the beam is decelerated by subsequent passes through the linac. The electron beam is transported in the RHIC tunnel with two Fixed Field Alternating Gradient (FFAG) arcs of permanent combined-function magnets, each transporting several passes. The ion beam is cooled using coherent-electron-cooling using a 50 m long 52 MeV superconducting electron linac. The beam crossing angle at the intersection region is 10 mrad with crab crossings to increase the effective luminosity. The facility would initially include one interaction region (IR) and detector with space provided for a second interaction region. The accelerator total project cost was presented to be $755.9 M in FY15$. This amount includes a contingency of 31%. An on-going pre-project R&D program that has been underway for several years would continue into project approval when a $20 M on-project R&D program would begin. An initial detector might cost about $100 M for hardware with a rough estimate including full effort costs bringing the total to $237 M. Much of the effort is anticipated to be contributed by collaborators. Finally accelerator pre-operations activities are estimated at $18.9 M and annual operations costs, including experimental support, are estimated, slightly up from those of RHIC, at $173.3 M / year.

The design concept will work if the unproven technical components can be shown to meet the demanding technical specifications. The half-dozen or so unproven or demanding technical components of the eRHIC proposal present both technical and cost risks and will require substantial R&D to be proven reliable and cost-effective. These include a coherent electron cooling system, a high current electron polarized source, a high current energy recovery linac, a crab cavity interaction region, an asymmetric interaction region, FFAG beam transport, and spreader/combiner beam transport on either side of the main linac. (Elements of some of these, for example the asymmetric interaction region or speader/combiner transport, have been demonstrated at other facilities.) Furthermore, the subcommittee believes the resources required to demonstrate component successes at the performance levels required to begin production have been seriously underestimated both at the ongoing pre-project level and the $20M on-project level.

The BNL proposal team utilized a thorough Work Breakdown Structure and documented the Basis of Estimate for the design, construction, and installation of the hardware. The hardware estimate of $755.9 includes 31% contingency. This level of contingency is viewed by the subcommittee to be low for the level of project definition and risk.

Accelerator Physics and Design Concept

The EIC accelerator concept is a frontier polarized electron-ion collider with a center of mass energy range of 20 to 100 GeV and a luminosity in the range of $10^{33\text{-}34}/\text{cm}^2/\text{s}$, expandable to higher energy. BNL chose a design that in the initial stage could reach the center-of-mass energy of 146 GeV in e-p collisions and 92 GeV in e-Au collisions. eRHIC provides for collisions between polarized electrons, provided by a newly constructed electron facility, and polarized protons/ions, provided by the existing RHIC accelerator complex. The major facility components include:

- A 250 GeV/100 GeV/u proton/ion storage ring
- A coherent electron cooling (CeC) facility to lower the emittance of the proton/ion beams
- A 1.3-21 GeV electron accelerator, based on a high current polarized electron source, an energy recovery linac (ERL), and a sixteen-turn recirculation scheme based on fixed field alternating gradient (FFAG) beam transport.

Figure 1 illustrates the concept of the facility and Figure 2 gives a list of important technical parameters for one particular nominal energy. Figure 3 shows the projected luminosity vs center of mass energy for e-p collisions. The existing RHIC ion ring, tunnel, and the ion injector chain are used in eRHIC .

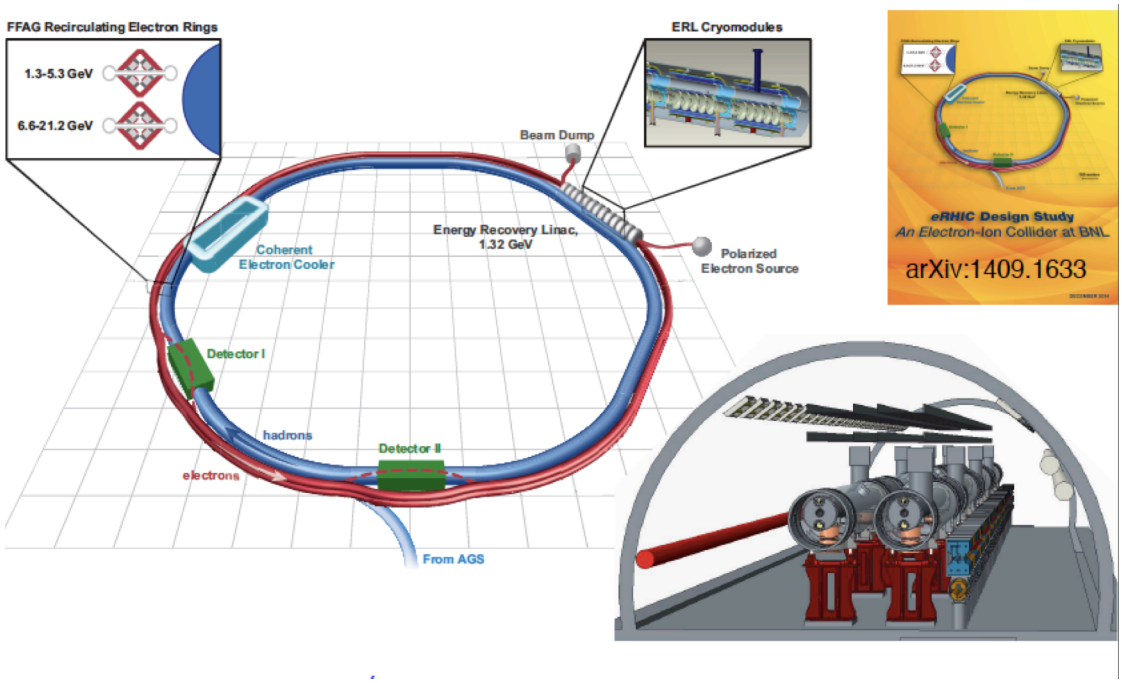

Figure 1: Layout of eRHIC

eRHIC has an overall design that is fairly mature. However, eRHIC incorporates many new technical systems that need significant advanced R&D that is both pre-project and on-project.

The two 3834 m FFAG electron transport arcs will be the first large scale use of this technology with the intent on having many turns at different energies in each ring. A large scale FFAG test is being investigated at Cornell with the help of BNL-Collider Accelerator Division (CAD).

	e	p	$^{2}He^{3}$	$^{79}Au^{197}$
Energy, GeV	15.9	250	167	100
CM energy, GeV		126	103	80
Bunch frequency, MHz	9.4	9.4	9.4	9.4
Bunch intensity (nucleons), 10^{11}	0.07	3.0	3.0	3.0
Bunch charge, nC	1.1	48	32	19.6
Beam current, mA	10	415	275	165
Hadron rms normalized emittance, 10^{-6} m		0.2	0.2	0.2
Electron rms normalized emittance, 10^{-6} m		23	35	58
β^*, cm (both planes)	5	5	5	5
Hadron beam-beam parameter		0.004	0.003	0.008
Electron beam disruption		36	16	6
Space charge parameter		0.08	0.08	0.08
rms bunch length, cm	0.4	5	5	5
Polarization, %	80	70	70	none
Peak luminosity, 10^{33} $cm^{-2}s^{-1}$		4.1	2.8	1.7

Figure 2: eRHIC operating parameters for nominal energy running

Coherent electron Cooling CeC is required to make a large luminosity enhancement by reducing the six dimensional beam phase space of the ion beam by a factor of 600 to 1000 in time scales of the order of one minute. A large scale beam experiment is in the construction phase at in the BNL-CAD.

The ERL superconducting (SC) linac to drive the electron beam through the FFAG needs to work at high beam current (0.7 A) that will generate significant Higher Order Mode (HOM) power due to the short bunch lengths (~4 mm). The HOM power, estimated at over 7kW per cavity, will have to be safely extracted from the cavities without significant load on the cryogenic system. (A mitigation strategy was proposed to reduce this HOM power to less than 1 kW/cavity with luminosities reduced from those in Figure 3, but this is still much larger that the 2 W per cavity at LCLS-II, for example. High HOM power removal has been dealt with at KEK, but in a single-cell cavity configuration with long, room-temperature HOM absorbers on either end, not a long (>50 m), continuous string of 42, 5 cell cavities, all at 1.9 K and

all producing HOM power comparable to the KEK cavity.) The performance of this linac at full specifications is crucial to the success of eRHIC. The SC cavities proposed for the linac are specified with low residual resistance (5 nOhm) to reduce cryogenic losses but there is, as yet, no community experience in the 400MHz regime at this level. Plans for prototyping were presented. The chosen RF bandwidth for maintaining stable RF operation is also aggressive.

A low-beta (5 cm) asymmetric-energy (12 to1) interaction region with 250 GeV protons and 21 GeV electrons needs further design efforts to take the next step towards viability. Crab cavities are being prototyped by the US Large Hadron Collider (LHC) Accelerator Research Program (LARP) for future LHC use. The results will be very useful for eRHIC as similar beam responses are expected.

The permanent magnets using NdFeB, with over 4000 FFAG magnets required, needs to be prototyped to make sure that tolerances, ability to handle the radiation environment, and temperature compensation can all be met before handing off to industry. Other required R&D topics include the control of the FFAG orbits and losses for the accelerating and decelerating electron beams from the gun to the IP and to the dump.

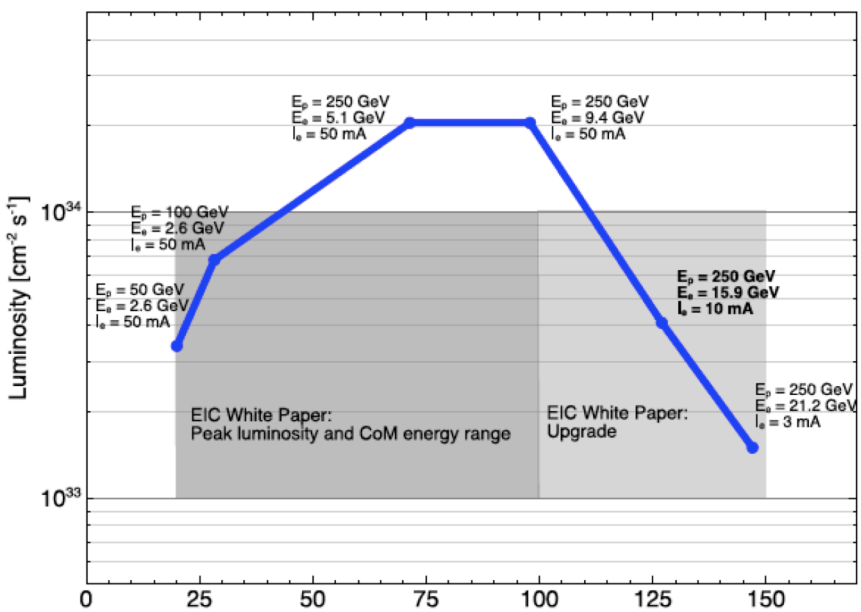

Figure 3: eRHIC Luminosity vs center of mass energy

Overall accelerator tolerances (misalignments, rolls, gradient errors, vibrations, collision errors) should be studied in detail. The wakefield effects in the FFAG could be large as all the bunches have fields that could coherently add. The potential depolarization of the electron beam from the strong beam-beam pinch should be studied. The schematic interaction region layout incorporating the four beam paths has been produced. The IR design should be taken to the next level of sophistication

to study full beam tolerances and detector backgrounds. The Machine Protection System (MPS) for the collider may have to develop a diagnostic that can differentiate between electron and ion losses. The abort sequences need to be identified in the event of cavity quench or other machine protection incidents. The decelerating bunches have a transverse beam size of about 10 cm heading to the dump. This large beam size and the corresponding machine magnetic and physical apertures could be very sensitive to upstream accelerator errors.

The eRHIC cost estimates did not include those associated with upgrades to the SRF infrastructure either at BNL or other partnering DOE laboratories for processing or assembly. In particular the electron linac cavities are larger than typical and so may require significant upgrades to present infrastructure for cavity processing and string assembly. Also, the manpower effort at external laboratories may not have been included correctly as there is an overhead to these collaborations that could drive costs or schedule. Similarly, the effort for (pre-project and) project R&D on developments in the cost estimates seems low but were difficult to quantize without measureable goals as to what level of performance is needed to get to Critical Decision-1 (CD-1).

Magnets

The new magnet systems supporting this configuration include 4264 permanent magnets, each with two corrector windings, within the FFAG transport lines, and several hundred (mostly room temperature) electromagnets for the spreader/combiner, ERL, CeC, and interaction points. The permanent magnets are the most significant component and are costed at roughly $15,000 per unit (TPC including corrector and power supply, vacuum chamber, and beam position monitors works out to $41.2k/magnet system, each roughly 1m long).

The underlying technical design of the magnet systems is straightforward with the exception of the FFAG permanent magnets. The FFAG magnets carry a modest technical risk, and a moderate cost or schedule risk. The quantities require industrial production and the tight specifications may require significant development time, increased vendor costs, and/or post-delivery rework. There is also some concern about cost fluctuations in the permanent magnet material.

With the exception of the permanent magnets the basis of estimate for the magnet systems is previous experience and recent purchases within the ERL and CeC R&D programs. The permanent magnets' estimates are based on design, experience at other laboratories and vendor informational quotes for the NdFeB magnet material. The contingency of 35% on the FFAG permanent magnets seems low for a new technology in the absence of a prototype. The contingency of ~25% on the balance of the magnets seems appropriate.

RF, Cryogenics Systems, Vacuum

Costs for these subsystems were presented at both a detailed level (with bases of estimates) and rolled up at various levels, making it easier to assess them in both absolute and relative terms.

As expected, the estimated costs rely largely on previous experience at BNL and other labs, and from vendor quotes. Thus acquisition costs for items such as vacuum equipment, power supplies, instrumentation and controls are on a firm basis. It is less clear if the full engineering, design and integration (ED&I) type costs are incorporated in the total costs for these items given the design is in a pre-CDR phase.

For the cryogenic systems, the layouts were worked out in a fair amount of detail with the associated cost estimates derived from JLab's recent experience upgrading their cryoplant, giving confidence in the quotes. This system costs about 75 M$ and has a high labor component, mainly due to the installation of the cryogen transfer lines for the three major cryo-systems, with each having connections to the main cryo plant.

For the rf sources, there are many existing low frequency devices that are well proven, and the general approach of using solid state amplifiers for systems requiring less than 20 kW is sound. As an example, the 400 k$/unit cost (with 30% contingency) for the 42, 30 kW, 422 MHz sources is quoted as a catalog item, and costs for the waveguide components, low level RF (LLRF) and installation adds another 155 k$. These 42 units represent about a third of the 67 M$ total RF and LLRF costs.

For the cavities, the costs are not on as firm a basis as there are many new designs that have to perform beyond the state-of-the-art. In particular, the 42, 1.7 m long 422 MHz cavities, which constitute about 40% of the total cavity cost, have to operate with high Q_o (5e10, which will likely require the use of N_2 doping and special cool down techniques that prevent flux trapping), narrow bandwidth (12 Hz, which may challenging given susceptibility of the large cavity to microphonics), relatively high gradient (18.5 MV/m, for which Lorentz force detuning will be an issue) and very high HOM power (7.8 kW, whose leakage into the 1.9 K cooling system needs to be kept small relative to the 50 W of RF heating per cavity). An option to operate at 4K was also mentioned as a cost-cutting feature but this would require substantial reduction in the BCS resistance through doping or other techniques (development required), and would likely increase microphonics, which would drive up RF costs.

The estimates generally assume scaled cost from similar cavities, but do not reflect the full development cost required to qualify the performance before production begins, nor the full facility costs to do the testing. For example, the ~ 1 M$ cost quoted (with contingency) for the 422 MHz cavity is not unreasonable for a proven

design, but low for the development and qualification that would be required in this case.

Conventional Facilities

The Brookhaven Conventional Facilities costs are estimated to be approximately $67M. Much of the current RHIC facility will be reused for the proposed eRHIC project. The estimate includes all modifications and additions to the RHIC facilities, utilities and air conditioning. The estimate was created using a combination of Means estimates and engineering estimates. The Means estimates were used for utility costs (potable water, storm and sanitary sewer lines, and communication duct banks) and for the costs of 4 buildings (2 outer service buildings, 2 inner service buildings, and a mezzanine extension). The costs per square foot of the various facilities ranged from $450 to $600.

Engineering estimates were used for the power distribution, lighting, other power upgrades, water cooling and chilled water systems and Brookhaven labor for removal of existing equipment. The cost estimate assumes that 4 large contracts will be used therefore capping overhead costs at $300K for each of these large contracts. These are for the 13.8 kV distribution contract, the 480 V distribution contract, the field support and safety contract, and the architect and engineering firm contract.

A standard special overhead rate for large projects was used for the balance of the cost estimate. The engineering coordination work, estimated at 5% of total costs, translates to approximately 3 FTEs for 4 years of construction, which may be somewhat light for construction engineering support.

The largest risk to the Conventional Facilities cost estimate is changes in the project's technical requirements that might impact the facilities requirements. A cost contingency was estimated on each element of cost and on average is 39%. Given the current plans, it does not appear that there are any unique construction conditions that would indicate the need for additional cost contingency. The estimated cost with 39% contingency appears reasonable.

Project Management, Pre-operations and Operations

The project management approach and cost is scaled from smaller projects successfully completed by BNL's Collider Accelerator Department and includes 40 FTE-yr for project controls, 20 FTE-yr in administrative support and 8 FTE-yr in information technology support. It also includes 10 FTE-yr for project management (including project manager and project director) and 14 FTE-yr for integration and installation management. 4 FTE-yr of ES&H management and 4 FTE-yr for a quality assurance (QA) manager are also included, as well as $1.9M (BAC) in materials, supplies and travel support. The total of 12.5 FTE/yr (on average) and $28.4M

(TPC) for an eight-year, $756M (TPC) project covering project management, project controls, ES&H and QA, is very low relative to other BNL projects (NSLS-2) or other NP projects (FRIB). We note that project management tends to be a level-of-effort "standing army" for the duration of the project. Civil construction safety management may require a dedicated staff member.

Cost Estimating Approach and Contingency

A bottom-up cost estimate was prepared by experienced subject matter experts. These subject matter experts were asked to assign cost and bottom-up risk to the scope they estimated based on technical risk, cost risk and schedule risk. Intrinsic in this bottom-up cost estimating approach early-on in a project is that estimators estimate well-known scope reliably, but project engineering and design (PED), integration and testing activities may be underestimated. In addition, risks for not-well-defined scope yield contingencies that may be too low to eventually deliver the project. In addition to the bottom-up risk assessment, a top-down management assessment of risks is needed to arrive at an appropriate level of contingency. Top-down risks include contingency to fund project staff at a certain level during project delays (schedule float), currency fluctuations, possibly missing scope, missing integration, mitigation of impact when the chosen technology cannot be developed to production, known unknowns and unknown unknowns. In the early stages of a project the top-down assessment of risk can approach a large fraction of the bottom-up risk. Both risks are additive and need to be mitigated by appropriate contingency. The subcommittee finds the overall cost contingency of 30% to be low for the level of project definition and risk. Spares and special process spares were not included in the estimate.

Pre-operations

Pre-operations activities include integrated testing to already checked-out and installed hardware, accelerator readiness reviews and accelerator commissioning with beam. Pre-operations activities were presented to be complete when the key performance parameters are demonstrated (visible collisions). A parametric estimate was developed consistent with the NSLS-II and 12 GeV estimates at the time of baselining. The subcommittee notes that this approach may lead to an underestimation of the pre-operations cost since (i) the eRHIC scope is more complex, (ii) actual pre-operations costs exceed the baselined cost at both NSLS-II and 12 GeV and (iii) the eRHIC pre-operations cost includes a large fraction for utilities. A pre-operations cost estimate above 5% of TPC plus utility cost may be closer to the eventual cost. Appropriately, the pre-operations cost does not include cost for retention of project staff needed to operate eRHIC once CD-4 is achieved.

Operations

The operations cost estimate is based on actual experience of operating RHIC (340 FTE) with reductions of staff from the medium range R&D program and detector

support and additions of staff in areas that require additional expertise (SRF) or capacity, yielding an eRHIC operation staff of 355 FTE. Materials and supplies are scaled with the increase in staff and adjustments for the projected power consumption are made, resulting in an annual operations cost of $173.3M (for 28 weeks) , which is very close to that of current RHIC operations. Relative to other projects at this early stage of development, this operations cost estimate is well developed. Once the exact kinds of expertise to maintain the superconducting linacs and the cryoplant are known, it may need to be adjusted upwards somewhat. Staff numbers do not include trades, these are budgeted in procurement cost.

Physics and Experimental Facilities

Deep inelastic lepton-nucleon scattering (DIS) is the key process for resolving nucleon structure since the discovery of quarks in *ep* scattering at SLAC nearly 50 years ago. The focus of the here proposed electron-ion colliders (EIC) is on polarized *eN* and heavy ion *eA* scattering. They thus follow a series of fixed target DIS experiments performed over decades, with HERMES (at DESY) and COMPASS (at CERN) for polarized and NMC (at CERN, New Muon Collaboration) for lepton-ion scattering as the main previous facilities, respectively. There are three prime EIC physics goals emphasized: i) the clarification of the proton spin, in particular the measurement of the gluon contribution ΔG vs Bjorken x; ii) the deeper evaluation of proton structure and parton dynamics extending to 3 dimensions; and iii) the resolution of nuclear structure in the kinematic range extending down to x values below 10^{-3}. eRHIC covers a cms energy range of 20-150 GeV, which is appropriate for these goals. With *ep* luminosities beyond 10^{33}cm^{-2} s^{-1} the new technology EICs surpass HERA's luminosities by possibly more than a factor of 100. Annual integrated luminosities of order of 10 fb^{-1} are envisaged, to be compared with HERA's total delivered luminosity of 1 fb^{-1} over 15 years. The EIC program and configurations thus represent a major new step in the evaluation of quark-gluon dynamics at dimensions of below ~0.1 fm and will no doubt lead to qualitatively new insight and to a much higher level of precision than hitherto achieved.

Detectors

Both proponents have presented a basic detector design with emphasis on particle identification (large RICH and Cerenkov detectors), vertexing and electron identification using a solenoidal field of ~3T. Both labs collaborate in detector R&D efforts and in the detector design, and may eventually collaborate in building such an apparatus. The cost of the detectors as presented is comparable, with genuine hardware costs of 115 M$ for BNL and extending to 237 M$ including full cost of all labor. Based on past experience, international collaboration can be expected to provide significant contributions to this effort. The integration of these detectors in an ep/A IR is especially challenging, with 15 beam bypass paths in two FFAG lines needed in the BNL case, and first IR considerations have been presented. Both designs chose to bend the proton beam for head-on collisions minimizing the synchrotron radiation load to the IR. The detectors need electron and photon

taggers in the electron beam direction as well as proton, neutron and deuteron taggers in the proton beam direction. Precision measurements of O(1)% are required to control both beam polarizations.

First concepts for the non-central detector elements have been shown. Both accelerator configurations foresee a second intersection region. The large investment as foreseen for the EIC as well as the broad physics program and challenges in precision all suggest that eventually two detectors will be realized.

The committee commented on the absence of 4π hadron calorimeter coverage in both designs, which yet is crucial at an *ep* collider for maximizing the kinematic coverage (low y), high precision (*e-h* redundancy), the radiative correction control ("E-pz") and also the desire to do charged current $eN \rightarrow \nu X$ ("missing energy") measurements for flavor separation as are facilitated by the high luminosities available at a Q^2 range extending to above 10^3 GeV^2.

eRHIC R&D

The subcommittee commented above on the essential R&D required to verify the performance and cost. The R&D costs were presented in two parts: Off project R&D (Pre-Project R&D) and On-Project R&D. The Pre-Project R&D is partially supported by LDRD, SBIR projects and DOE R&D funds. Several high profile R&D programs, which are crucial for the presented machine design are currently being pursued. Twenty seven FTEs (about 10 scientists) in the BNL accelerator department are involved in various R&D projects with an annual budget of about 7.5M$. These funds are highly leveraged and critical for the project. Highest priority items include a high current polarized electron gun, demonstration of a high energy and high current ERL, beam-beam simulations, polarized ^{3}He production and acceleration, and Coherent electron Cooling (CeC).

Cavity developments are listed as high priority items. A 700 MHz 5-cell elliptical cavity has been developed and is used in the ERL test stand as well as for the proof of principle experiment for the CeC at full bunch intensity but low repetition factor. In addition, crab cavities are being developed as part of the HL-LHC program.

The On-Project R&D totals 20 M$ (including 30% contingency). No detailed cost estimate other than high level numbers were provided. It was stated by the team that the current FTE level will be carried forward to complete the necessary R&D. The Sub-committee regards this level of R&D funds as significantly less than would be needed for a project of this scale, complexity and innovative design. Several high risk items have been introduced to the project that have reduced the cost estimate significantly, but will require substantial R&D in order to validate the concepts. The current plan is to complete these high risk R&D items before the project starts and focus the on-project R&D on value engineering. The Sub-committee regards this plan as highly optimistic.

The on-project R&D funds are mainly used to prototype the FFAG permanent magnets and the ERL cryomodules. It is optimistically assumed that only minor modifications for the cyromodule prototype will be required to transition from the prototype to the final design. In addition no plan was presented to transition from the R&D phase into preproduction and production phase. It is assumed that the preproduction cavities from the R&D phase will be used in the final cryomodule.

Several additional challenges have been identified by the subcommittee where more R&D, prototyping, or PED might be required. These areas include HOM management, high Q-cavity R&D, integrated testing of cryomodule sections, and development of the interaction region.

Given the challenges yet to be proven, the R&D budget, which includes on and off project funding, appears to be very low for a project of this complexity.

JLab MEIC Proposal Cost Estimate Executive Summary

The Thomas Jefferson National Accelerator Facility presented their current technical concept design, R&D, PE&D, construction, pre-operations and operations plan – cost estimate and schedule – to an NSAC EIC Cost Estimate Review Sub-committee on January 27, 2015. They present a Total Project Cost without detector of $1.29B in FY15$ and a TPC with detector of $1.48B. Pre-operations (included in the TPC) are estimated at $37.3M and the annual MEIC operating cost is estimated at $117.7M for 26 weeks of operations. The JLab team returned on January 28 to answer questions of the subcommittee.

This ring-ring design concept is largely based on conventional technologies and can be expected to perform as planned. There are a modest number of higher risk components that the R&D program should address.

Several parts of the cost estimate were prepared on a parametric basis, which is typical at this early stage of project development. The extensive cavity and cryomodule experience at JLab lends credence to these estimates. The recent experience from the 12 GeV Upgrade project is a benefit to the team as well.

Overall the cost estimate of the chosen technical scope was reasonable. The TPC is reasonable, although the R&D and Pre-ops funds are marginal. The 35% overall contingency is marginally appropriate.

Accelerator Physics Conceptual Design

MEIC provides for collisions between polarized electrons and ions within newly constructed electron and ion storage rings. The major facility components include:

- A 100 GeV/40 GeV/u proton/ion figure-8 storage ring, supported by a proton/ion injector complex with a 285 MeV pulsed superconducting linac and an 8 GeV figure-8 booster.
- Electron cooling facilities for creating and maintaining high luminosity proton/ion beams
- A 3-10 GeV electron storage ring, with CEBAF serving as a full energy injector

The layout of the facility is shown in Figure 4. This ring-ring collider is largely based on existing accelerator technology but does include a few new technical systems that need R&D. Performance goals and related costs rely on a modest number of technologies that require demonstration:

- Bunched-beam electron cooling utilizing a high-current ERL
- Superferric magnets
- High gradient crab cavities
- Figure-8 shaped rings to aid in polarization preservation

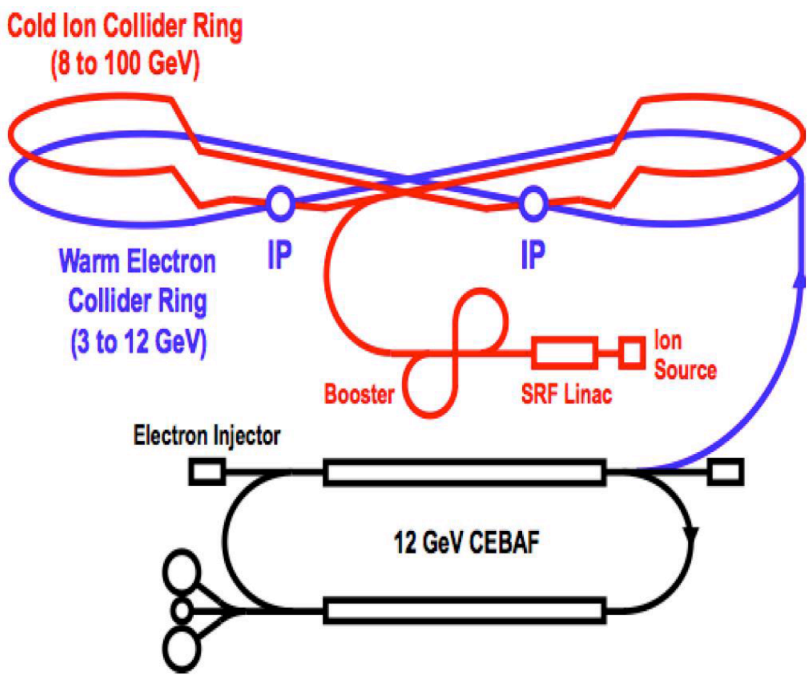

Figure 4: Layout of the Medium Energy Ion-Collider.

The 12 GeV electron ring incorporates surplus PEP-II components. It should work as described. However, the new spin rotators for the electron beam at high energy will use strong solenoids and dipoles and will potentially have tight tolerances on alignment, strength settings, and field multipoles. The electron beam of 3 A at low energy (4-5 GeV) could potentially have (beam gas) ion or fast ion instabilities that should be simulated to see if beam gaps are sufficient cures.

The Figure-8 geometry for the ion and electron rings is a significant advance in the mitigation of spin depolarization, but may incur a larger cost than a more traditional approach. The effects of the IR trajectories, ring geometries, and orbit corrections should be studied for de-polarization effects.

The ERL cooling ring for the MEIC ion beam will be less difficult to construct than the one for eRHIC and easier to operate as it is single pass. However, there are still challenges for the 0.2 A SC linac of the ERL cooler in terms of power handling and HOMs.

The crab cavities near the IP have to work harder in this design compensating for a 50 mrad crossing angle with correspondingly tighter tolerances. The electron ring crab cavities will be more complicated than the ones for LHC due to the expected higher HOM powers.

The electron gun for the cooler needs to produce 67 mA with three separate guns and then the beams combined to 200 mA. The CW 67 mA from these guns is somewhat above the current produced by the present Cornell gun (~50 mA and 1 hour lifetime), the present state of the art. For MEIC the quality of the recombined beam needs to be carefully analyzed and may require significant development. This electron source has been correctly identified as requiring pre-project R&D.

For a full acceptance detector							
CM energy	GeV	21.9 **(low)**		44.7 **(medium)**		63.3 **(high)**	
		p	*e*	*p*	*E*	*p*	*e*
Beam energy	GeV	30	4	100	5	100	10
Collision frequency	MHz	476		476		159	
Particles per bunch	10^{10}	0.66	3.9	0.66	3.9	2.0	2.8
Beam current	A	0.5	3	0.5	3	0.5	0.72
Polarization	%	>70%	>70%	>70%	>70%	>70%	>70%
Bunch length, RMS	cm	2.5	1.2	1	1.2	2.5	1.2
Norm. emitt., vert./horz.	μm	0.5/0.5	74/74	1/0.5	144/72	1.2/0.6	1152/576
Horizontal and vertical β^*	cm	3	5	2/4	2.6/1.3	5/2.5	2.4/1.2
Vert. beam-beam param.		0.01	0.02	0.006	0.014	0.002	0.013
Laslett tune-shift		0.054	small	0.01	small	0.01	small
Detector space, up/down	m	7/3.6	3.2 / 3	7/3.6	3.2 / 3	7/3.6	3.2 / 3 (3)
Hour-glass (HG) reduction		0.89		0.88		0.73	
Lumi./IP, w/HG, 10^{33}	$cm^{-2}s^{1}$	**1.9**		**4.6**		**1.0**	
For a high(er) luminosity detector							
Horizontal and vertical β^*	cm	1.2	2	1.6 / 0.8	1.6 / 0.8	2 /1	1.6 / 0.8
Vert. beam-beam param.		0.01	0.02	0.004	0.021	0.001	0.021
Detector space, up/down	m	±4.5	3	±4.5	3	±4.5	3
Hour-glass (HG) reduction		0.67		0.74		0.58	
Lumi./IP, w/HG, 10^{33}	$cm^{-2}s^{1}$	**3.5**		**7.5**		**1.4**	

Figure 5: MEIC performance baseline for a full acceptance detector and a higher luminosity detector.

The plan to operate all 950 MHz SRF equipment at 4.5K needs to be revisited. The BCS resistance given standard Nb treatment is 350nOhm and this will generate 100s of Watts of rf losses in each ERL cavity. The proton Crab cavities at 4K will require ~100W of rf power. In addition to the cryogenics load, boiling at 4K will generate significant microphonics and require an increased bandwidth to stabilize the RF - a reduction in Q_{ext} and an associated increase in RF power. Operation at 2K would require a 2K coldbox and modifications to the cryomodules.

The charge stripping scheme for the ion accelerator needs to be better developed. It was mentioned that multi-charge acceleration can be used in the linac to improve efficiency but that only a single charge state can be accepted by the booster. A stripping foil after the ion linac can be used to recover some of the multi-charge benefit but for the heavier nuclei not all ions will be stripped to a common charge state. A further stripping stage after the booster would be required to fully strip the heavier ions. The charge stripping sections, beam collimation and shielding would have to be detailed to know the full impact on costs and acceleration efficiency.

The MEIC approach capitalizes on significant prior investment in the CEBAF and PEP-II facilities. In particular the CEBAF facility is utilized with only minor modification as the injector into the electron ring, and significant equipment is recovered from PEP-II. The technical approach is innovative, yet largely based on existing technologies. The committee notes that that the performance of the bunched-beam electron cooling is not critical in meeting integrated luminosity goals.

The emphasis in the MEIC design is on minimizing technical risk. The cost could perhaps be reduced by reevaluating some underlying assumptions and choices, for example: the choice of energy and technology base for the ion linac, the cost-benefit of utilizing the figure-8 rings vs more traditional racetracks augmented by additional measures to preserve polarization, the cost-benefit of including electron cooling in the ion collider ring.

Magnets

The magnet systems supporting the ion complex include 320 superferric dipole magnets and roughly half this number of quadrupoles and sextupoles. The electron storage ring includes 202 dipoles, 414 quadrupoles, 136 sextupoles, 12 skew quadrupoles, and 331 corrector magnets. Nearly all of these electron ring magnets will be recovered from the decommissioned PEP-II facility at SLAC, but there will be a need to construct a number of new quadrupoles. The superferric magnets for the ion ring represent the most significant portion of the newly constructed items. These are costed at roughly 226k$ per half-cell unit (consisting of two dipoles, a quadrupole, and a sextupole situated within a single cryo-vessel).

The underlying technical basis of the magnet systems required is straightforward with the exception of the superferric magnets, which carry a modest technical and cost risk for ramped applications. A few prototypes should be measured and tested to validate performance and establish the fabrication process.

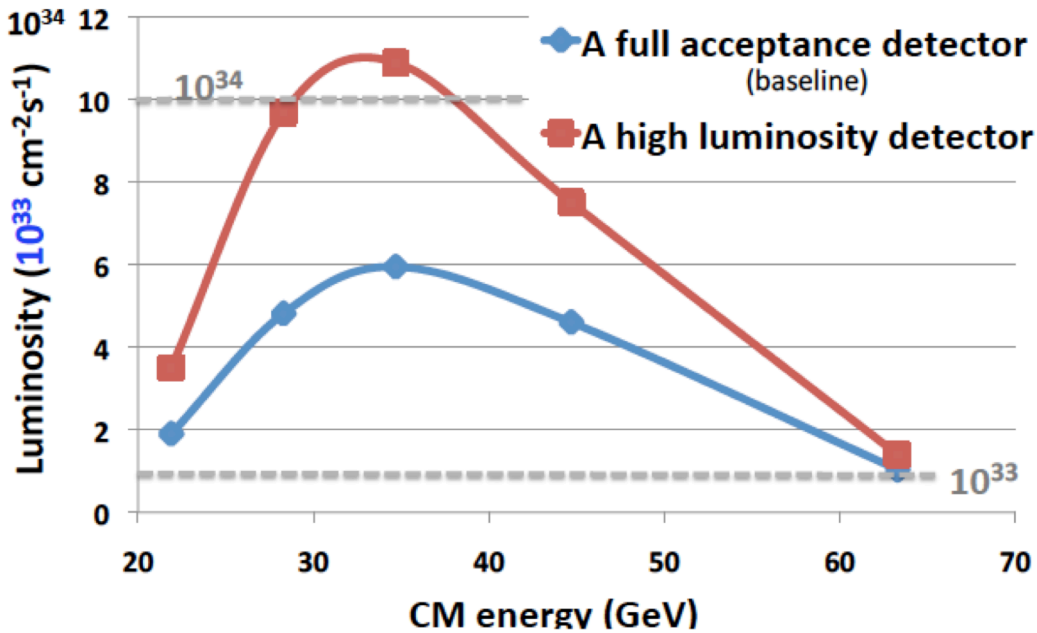

Figure 6: e-p luminosity vs center of mass energy.

The cost of the primary magnet systems is based on bottoms-up estimates and comparison with a benchmark (the FAIR facility in Germany) in the case of the superferric magnets. There is some risk associated with the recovery of the PEP-II magnets as they may require greater-than-planned refurbishment costs or additional overheads to match MEIC requirements

The contingency associated with the superferric magnets accommodates a basic change in design, requiring replacement with more traditional cosθ magnets at roughly double the cost. This approach to contingency is conservative. This contingency can be lowered once prototypes have been fabricated and successfully tested.

RF, Cryogenics Systems, Vacuum

JLab is in a particularly good position to cost these items having nearly completed the 12 GeV Upgrade project, where ten, 8-cavity cryomodules have been assembled in-house and installed in CEBAF along with new RF systems and an upgrade to the cryoplant to provide 18 kW, 4.5 K cooling capacity. This experience, along with vendor quotes and actual costs of related components from other labs such as SNS and JPARC, formed the basis for many of their estimates. For example, the cryogenic distributions lines were assumed to cost 10 k$/m based on their cryoplant upgrade experience.

For the electron ring, many of the components will be reused from the SLAC PEP-II collider, including the magnets, vacuum chambers, klystrons, klystron HV supplies, waveguides and interlocks. For these items, SLAC was consulted as to the cost for the removal and possible refurbishment that would be required for use at JLab. For the 285 MeV ion injector to the booster ring, JLab is relying on estimates provided by ANL for a similar design they did for the ANL FRIB proposal that uses SRF accelerators. JLab did not independently vet these estimates. They are also considering an all-room-temperature design as a potentially lower cost alternative.

While the high level costs and contingencies were presented along with the bases of estimates, a full drill down was not provided. However, development, engineering, acquisition and qualification costs were not estimated individually in most cases, but included as a 15% 'overhead' on all accelerator items. In general, their estimates appear to be fairly conservative with about 40% contingency added for the accelerator system. Also for the more risky components, JLab used the cost of alternatives as the bases of the contingency in some cases. For example, they used the cost to replace one of the PEP-II RF stations and 250 m of beam pipe as a contingency on these items.

For the cryogenic system, which would be independent of their current cryoplant, the JLab team chose to use 4.5 K cooling for both magnets and rf cavities, which eliminates the cost of providing the 2K cold boxes for the cavity cooling, but increases the cooling power requirements (the 953 MHz cavity Q_o is expected to be 6e8, compared to > 1e10 if 2K cooling was used). A cost tradeoff analysis for this choice was done, but not presented at the review (they seem to be having second thoughts about using only 4.5 K cooling). This tradeoff, along with other discussions on how to minimize the overall site power would have been useful, in particular, as CEBAF would only be used for a few minutes every several hours to fill the electron ring.

For the RF system, one of the higher risk items is the 953 MHz, 0.8 m long, 5 cell cavity for the single pass ERL that would be used for bunched-beam ion cooling. It is a new design that is required to operate with 150 W of beam-induced HOM power (90 W above cutoff), which has to be absorbed without adding a significant thermal load to the 4.5 K cooling system, which the team estimates has to cool 377 W per cavity from RF losses (at 2 K this would be < 20 W). For these five cavities, the labor costs were roughly doubled to account for the added development work, resulting in a ~ 1.8 M$ per cavity cost without contingency, which seems appropriate at this time.

Conventional Facilities

The Jefferson Laboratory Conventional Facilities costs are estimated to be approximately $252M. Most of the Conventional Facilities costs are for new facilities including the experimental tunnels, detector halls and 42 support buildings. The square foot cost for each building varies widely between $222 and

$2,633 depending on the building complexity and outfitting. Also included in the estimate is the site preparation and utility distribution work. The estimate provided does not include any cost efficiencies for synergistic contracts, but instead estimates each building as a stand-alone construction project.

The project has used conservative (worst case) estimates for some areas of the conventional facilities where the design specifications are less certain (i.e., piles for tunnel support). The comparison estimates include overhead and profit, but the project has chosen to add 20% to the current detailed estimate for vendor overhead and profit. Again, the subcommittee feels that for this stage of the project a conservative approach seems warranted.

The current plan is to sub-contract all the conventional facility construction work. The laboratory has a special overhead rate of 13% on effort and 13% on the first $50K of individual procurement actions. Based on the 12 GeV project, this translates into a 1% overhead rate on all conventional facility procurement costs. The team has used the 1% overhead estimate for the MEIC Conventional Facilities procurements and has also escalated FY14 costs by 3% to estimate the overall project costs in FY15 dollars. The value of the Conventional Facilities management (APM, CAM's sub-CAM's, Integration) is $4.6M, which appears to be less than 3% of construction costs, and may be somewhat light for support costs.

The largest risk to the Conventional Facilities cost estimate is changes in the project's technical requirements that might impact the facilities requirements. Demolition and tunnel construction will also add risk. The contingency applied to both effort and contracts is 20%. Even with a very detailed conservative cost estimate, a larger contingency might be warranted at this stage of the project.

Project Management, Pre-Operations, Operations

The project management approach is informed by the 12 GeV project under completion at Jefferson Laboratory. The project office would be staffed by 28 FTE-yrs until CD-3 and by 90 FTE-yrs during construction. Additionally, 90 FTE-yrs support accelerator management, 18 FTE-yrs support experimental systems and 36 FTE-yrs support civil construction. Overall, 298 FTE-yrs support management of this $1.29B (TPC) project. Assuming the project is realized over eight years, this corresponds to 14.75 FTE/yr in the project office and 37 FTE/yr for overall project management. This level of support appears reasonable. Notably, lessons learned from the 12 GeV project were included and resulted in classifying procurements by complexity and adding 12 FTE-yrs for vendor management.

Cost Estimating Approach and Contingency

Consistent with the pre-conceptual state of design definition, a parametric top-down cost estimate was prepared with some bottom-up checks in certain areas. Project engineering and design (PED) costs were estimated parametrically as 15% of the

technical construction cost and the estimating approach includes parametric risk-based contingency as well as top-down contingency based on management judgment. Spares and special process spares were not included in the estimate. While certain areas may grow in cost due to technical changes, the committee did not find any areas that were left out of the cost estimate. The subcommittee finds the overall cost contingency of 35% to be marginal for the level of project definition.

Pre-operations

Pre-operations activities include integrated testing and accelerator commissioning with beam. The estimate was characterized as "success-oriented", the subcommittee finds the assumed durations to be too optimistic. While the team is familiar with electron machines, it may underestimate the additional complexity found in heavy-ion machines. The overall pre-operations cost estimate is 2.9% of the TPC, which is about a factor of 1.5 to 2.0 less than that for NSLS-II and the JLab 12 GeV upgrade. A pre-operations cost estimate above 5% of TPC plus utility cost may be closer to the eventual cost. Appropriately, the pre-operations cost does not include cost for retention of project staff needed to operate MEIC once CD-4 is achieved.

Operations

The operations cost estimate is based on parametric scaling of power, cryogens and supplies from the CEBAF operations model (currently 385 FTE), with an addition of 57 FTE to support the heavy-ion driver, booster and collider ring. No increase in Physics Division staff is planned. A cost of $117.7M is presented for 26 weeks of MEIC operations. The subcommittee questions if an increase of 57 FTEs is sufficient to support the additional complexity of the heavy-ion driver, booster and collider ring. Staff numbers include trades. The estimated personnel support for MEIC required for ion operation should be cross-checked against RHIC or GSI operation.

Physics and Experimental Facilities

Deep inelastic lepton-nucleon scattering (DIS) is the key process for resolving nucleon structure since the discovery of quarks in *ep* scattering at SLAC nearly 50 years ago. The focus of the proposed electron-ion colliders (EIC) is on polarized *eN* and heavy ion *eA* scattering. They thus follow a series of fixed target DIS experiments performed over decades, with HERMES and COMPASS for polarized and NMC for lepton-ion scattering as the main previous facilities, respectively. There are three prime EIC physics goals emphasized: i) the clarification of the proton spin, in particular the measurement of the gluon contribution ΔG vs Bjorken x; ii) the deeper evaluation of proton structure and parton dynamics extending to 3 dimensions; and iii) the resolution of nuclear structure in the kinematic range extending down to x values below 10^{-3}. The MEIC covers a center of mass energy range of 20-63 GeV, (40 GeV for the heaviest ions) which may be low for the third goal. With *ep* luminosities beyond 10^{33}cm^{-2} s^{-1} the new technology EICs surpass HERA's luminosities by possibly more than a factor of 100. Annual integrated

luminosities of order of 10 fb^{-1} are envisaged, to be compared with HERA's total delivered luminosity of 1 fb^{-1} over 15 years. The EIC program and configurations thus represent a major new step in the evaluation of quark-gluon dynamics at dimensions of below ~0.1 fm and will no doubt lead to qualitatively new insight and to a much higher level of precision than hitherto achieved.

Detectors

Both proponents have presented a basic detector design with emphasis on particle identification (large RICH and Cerenkov detectors), vertexing and electron identification using a solenoidal field of ~3T. Both labs collaborate in detector R&D efforts and in the detector design, and may eventually collaborate in building such an apparatus. The cost of the detectors as presented is comparable, with genuine hardware costs of 109 M$ for JLab, and extending to 188 M$ as maximum full cost. Based on past experience, international collaboration can be expected to provide significant contributions to this effort. The integration of these detectors in an ep/A IR is especially challenging, first IR considerations have been presented. Both designs chose to bend the proton beam for head-on collisions minimizing the synchrotron radiation load to the IR. The detectors need electron and photon taggers in the electron beam direction as well as proton, neutron and deuteron taggers in the proton beam direction. Precision measurements of O(1)% are required to control both beam polarizations.

First concepts for the non-central detector elements have been shown. Both accelerator configurations, at BNL and JLab, foresee a second IR. The large investment as foreseen for the EIC as well as the broad physics program and challenges in precision all suggest to eventually have two detectors realized.

The committee commented on the absence of 4π hadron calorimeter coverage in both designs, which yet is crucial at an *ep* collider for maximizing the kinematic coverage (low *y*), high precision (*e-h* redundancy), the radiative correction control ("E-pz") and also the desire to do charged current $eN \rightarrow \nu X$ ("missing energy") measurements for flavor separation as are facilitated by the high luminosities available at a Q^2 range extending to above 10^3 GeV^2.

MEIC R&D

The JLab R&D program towards MEIC is still in its early stages. The sub-committee notes that the presented JLAB design is relatively conservative. More R&D items may emerge as the design matures.

A small scale off-project R&D program is ongoing which is estimated to be about 3M$ over the next 4 years. This estimate does not account for redirected JLab manpower. Superferric magnets are identified as medium risk item – a plan for prototyping a 1.2m dipole was discussed. Other areas of risk identified involve the

development of adequate simulation tools to validate the accelerator physics design and design optimization. Tests at the Institute of Modern Physics in China are planned to test concepts of the low energy cooling scheme.

The subcommittee notes that no R&D items for the heavy ion linac area have been identified since a parametric design was used for costing. A budget of about 15M$ (including contingency) has been estimated for on-project R&D items. This estimate includes manpower estimates and materials. The main on-project R&D areas identified are the high current e-gun injector (200mA) for the bunched ion beam cooling and crab cavity development. The sub-committee notes that the R&D efforts presented are low for a project of this complexity and size.

Appendix 1: Instructions to the Subcommittee

Donald F. Geesaman
Distinguished Argonne Fellow

1-630-252-4059 phone
1-630-252-3903 fax
geesaman@anl.gov

Physics Division
Argonne National Laboratory
9700 South Cass Avenue, Bldg. 203
Argonne, IL 60439-4845

Argonne NATIONAL LABORATORY

December 4, 2014

Dr. L. Edward Temple
Office of the Director
Argonne National Laboratory
9700 South Cass Avenue
Argonne, IL 60439

Dear Dr. ~~Temple~~, Ed

Thank you for agreeing to chair the NSAC EIC costing subcommittee. The membership of the subcommittee is:

L. E. Temple, chair
K. Boudwin
M. Champion
D. Geesaman, ex officio
R. Gerig
T. Glasmacher
S. Holmes
R. Laxdal
D. Leitner
M. Klein
J. Seeman
V. Shiltsev

One or two additional members may be added depending on availability. The instructions to the subcommittee are as follows:

As part of its long range planning process, the Nuclear Science Advisory Committee (NSAC) will be considering the scientific priority of one project identified in the 2007 NSAC Long Range Plan as embodying the vision for reaching the next QCD frontier, a polarized electron-ion collider. Since that time the community has developed white papers on the science case and goals for the machine design. Realizing this physics requires a collider with highly polarized (both ~70%) electron-nucleon collisions and un-polarized electron-nucleus collisions (with nuclei ranging from deuterium to Uranium or Lead). Other essential design parameters include electron-proton-equivalent variable center of mass energy range ~20-100 GeV (upgradable to ~150 GeV) and per-nucleon electron-proton luminosity in the range $10^{33\text{-}34}$ $cm^{-2}sec^{-1}$. The need of having more than one interaction point has also been emphasized. Two institutions, BNL and JLAB have developed designs for such a machine.

Understanding that a detailed conceptual design has not been completed, the Subcommittee is asked to provide NSAC with its best current estimate of the costs of the projects that will address the physics opportunities identified in the EIC White Paper (arXiv: 1212.1701v2), including R&D, construction, pre-operating and operating costs and initial experimental equipment. NSAC is aware that there are uncertainties regarding siting and other issues that limit the precision of such an estimate at this time. Nevertheless, the advice of the Subcommittee will be of great value to NSAC as it evaluates the relative merit of this and other initiatives. Since the charge to NSAC for the long- range plan explicitly discusses resources in terms of the 2015 President's Budget Request, we ask that the results of this review be presented in FY2015 dollars. If the laboratories choose to present staging options to incrementally reach the science goals described in the EIC White Paper, please consider these as well.

The subcommittee is asked to provide a written report to NSAC by the end of February 2015. I expect it will be considered by NSAC in a meeting in late March 2015.

Your experience, as well as that of the other subcommittee members, will be invaluable for this exercise. Thank you again for agreeing to lead this subcommittee. I realize this is a heavy responsibility. I, and the entire community, will owe you an enormous debt of gratitude.

Sincerely,

Donald F. Geesaman
Chair, NSAC

Appendix 2: Membership of the EIC Cost Subcommittee

C. Adolphsen	SLAC National Accelerator Laboratory
G. Bock	Fermi National Accelerator Laboratory
K. Boudwin	Oak Ridge National Laboratory
T. Glasmacher	Michigan State University
S. Holmes	Fermi National Accelerator Laboratory
M. Klein	University of Liverpool
R. Laxdal	TRIUMF
D. Leitner	Michigan State University
J. Seeman	SLAC National Accelerator Laboratory
E. Temple, chair	Argonne National Laboratory
D. Geesaman, ex-officio	Argonne National Laboratory