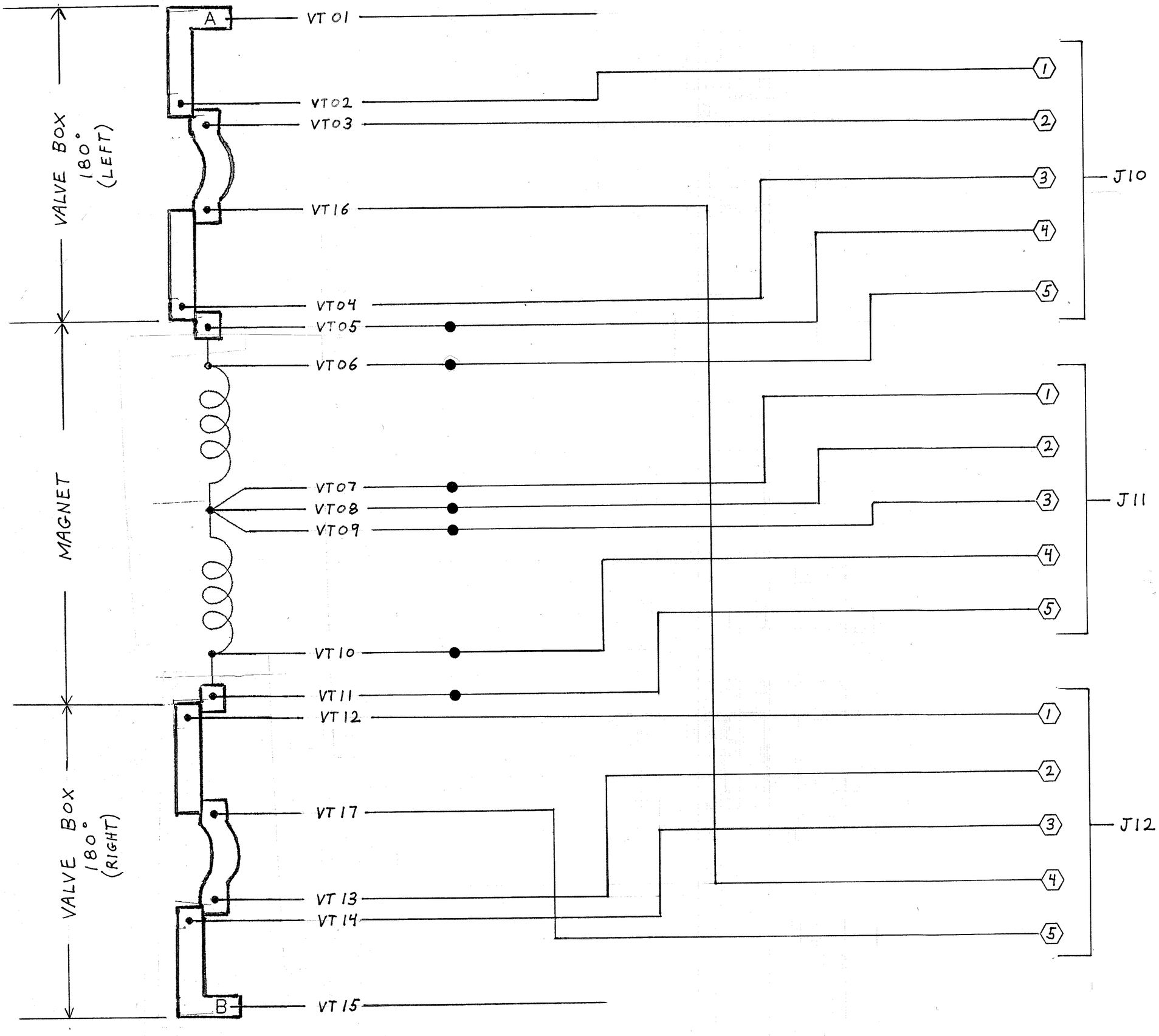

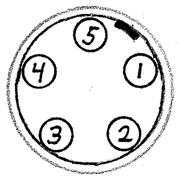

VALVE BOX
VOLTAGE TAP CONNECTORS
J10, J11, J12

PIN DIAGRAM
FEMALE PINS (FACING CONNECTOR)

P. Giannotti
7-1-2015